gunt HAMBURG

Equipment for engineering education

Thermal engineering

3

Table of contents

Welcome to GUNT

In this catalogue, we present a comprehensive overview of our innovative demonstration and experimental units.

GUNT units are used for:

- education in technical professions
- training and education of technical personnel in trade and industry
- studies in engineering disciplines

Imprint

© 2018 G.U.N.T. Gerätebau GmbH. Any reuse, storage, duplication and reproduction of content – even in extracts – is prohibited without the written approval of G.U.N.T. Gerätebau GmbH.
GUNT is a registered trademark. This means GUNT products are protected, and subject to copyright.

No liability can be accepted for any misprints.
Subject to change without notice.

Image credits: G.U.N.T. Gerätebau GmbH, manufacturers' photos, Shutterstock, 123RF.
Design & typesetting: Profisatz.Graphics, Bianca Buhmann, Hamburg.
Printed on non-chlorinated, environmentally friendly paper.

Thermal engineering

	Introduction	004
1	Fundamentals of thermodynamics	008
2	Heat exchangers	064
3	Thermal fluid energy machines	110
4	Fundamentals of refrigeration	198
5	Thermodynamic applications in supply engineering: HVAC	232
	Index	320
	Product overview	324

Thermodynamics at GUNT

Thermal engineering comprises the discipline of thermodynamics and the specialisation of energy technology.

Thermodynamics as a general study of energy is a fundamental science of technology. It is a fundamental subject in almost all technical courses of study and training.

Thermodynamics is particularly important for energy engineering, e.g. in the planning, construction and operation of power plants. It also plays a key role in the design of fluid machinery such as turbines, compressors, internal combustion engines or drive mechanisms.

In order to cover the extensive topic of thermodynamics comprehensively, GUNT has distinguished the subject areas from each other and compiled them in two catalogues:

The main catalogue is catalogue 3 **Thermal engineering**. One important field of thermodynamics is **refrigeration and air conditioning technology.** GUNT has dedicated catalogue 3a to this topic.

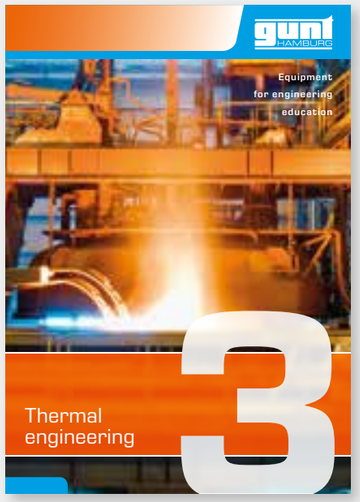

Courses of study,
all engineering sciences, e.g.
- mechanical engineering
- environmental engineering
- applied natural sciences
- industrial engineering
- civil engineering and architecture
- energy engineering
- process engineering

Training in the field of
- refrigeration technology
- mechatronics
- air conditioning technology

Courses of study
- mechanical engineering
- supply engineering
- civil engineering
- environmental engineering
- refrigeration technology
- building services engineering
- facility management
- climate engineering

Why "thermal engineering"?

Thermal engineering involves more than pure thermodynamics. In thermal engineering, it is necessary to take account of connections and interrelationships with other disciplines/teaching fields. The example of an internal combustion engine below shows which knowledge from other disciplines is necessary for understanding and design.

Thermodynamics: 1st and 2nd principle, phase change, heat transfer, energetic balancing

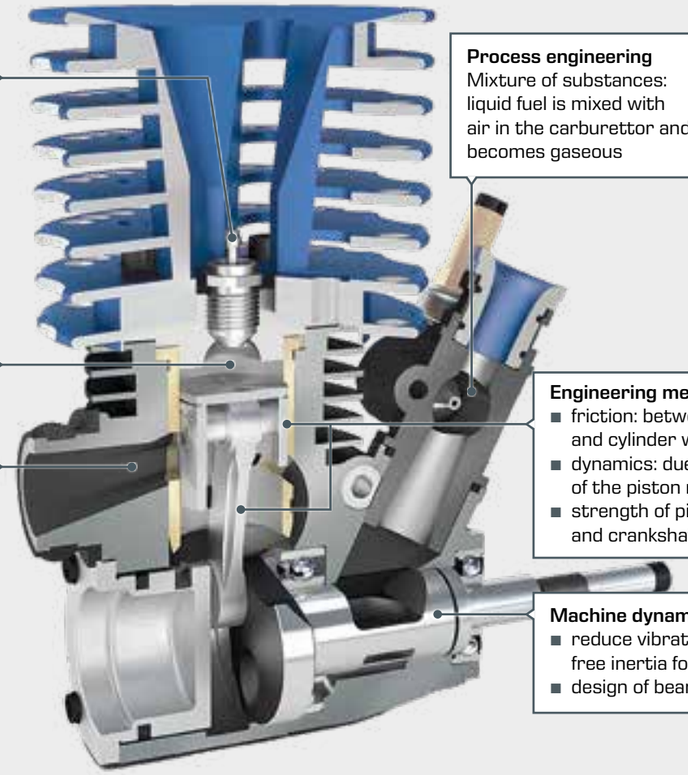

Electrical engineering
Ignition: by electrical energy

Process engineering
Mixture of substances: liquid fuel is mixed with air in the carburettor and becomes gaseous

Chemistry
Conversion of matter: in the combustion chamber, the chemically bound energy of the fuel is released by conversion of matter, fuel becomes exhaust gas

Engineering mechanics
- friction: between piston and cylinder wall
- dynamics: due to motion of the piston rod
- strength of piston rod and crankshaft

Fluid mechanics
Flow of compressible fluids: fuel and air are added, exhaust gases are discharged

Machine dynamics
- reduce vibrations due to free inertia forces
- design of bearings

Engineering design
Functional and energy-efficient design

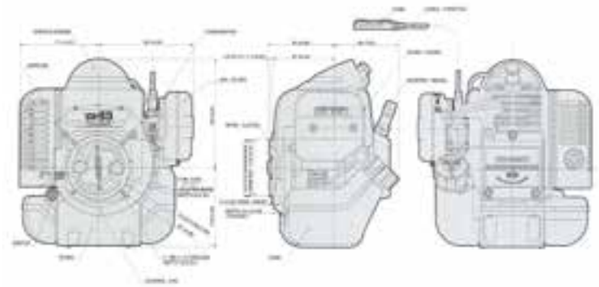

Computing and information technologies
For cyclic processes for internal combustion engines, e.g. the Seiliger process

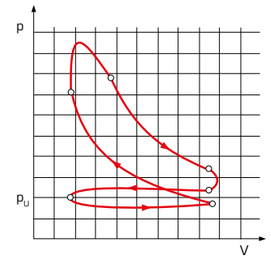

Thermodynamics at GUNT

Structure of the catalogue

Catalogue 3 is divided into five chapters. Firstly, the basics of thermodynamics are discussed as an introduction to the topic. The next section deals with application and practice.

When compiling the **Thermodynamics** product range, GUNT took guidance from the standard curricula and textbooks in use at German universities.

Fundamentals and introduction

Chapter 1 | Fundamentals of thermodynamics

- Thermodynamic state variables
- Principles of heat transfer
- Phase transition

Application and practice

Chapter 2 | Heat exchangers

- heat transfer
- recuperators
- direct-contact heat exchangers
- fluidised bed heat exchanger

Chapter 3 | Thermal fluid energy machines

- steam power plants
- gas turbines
- piston compressors
- internal combustion engines

Chapter 4 | Principles of refrigeration

- principles of cold production
- compression refrigeration system
- refrigeration applications

Chapter 5 | Thermodynamic applications in supply engineering HVAC

- hot water generation
- air conditioning technology and ventilation
- GUNT-RHLine Renewable Heat

Equipment series in the thermodynamics product range

Chapter 1 | Fundamentals of thermodynamics

GUNT-Thermoline Fundamentals of heat transfer

Chapter 2 | Heat exchangers

Series WL 110 Heat exchanger with supply unit

Chapter 4 | Fundamentals of refrigeration

Chapter 5 | Thermodynamic applications in supply engineering HVAC

ET 915 HSI training system refrigeration and air conditioning technology

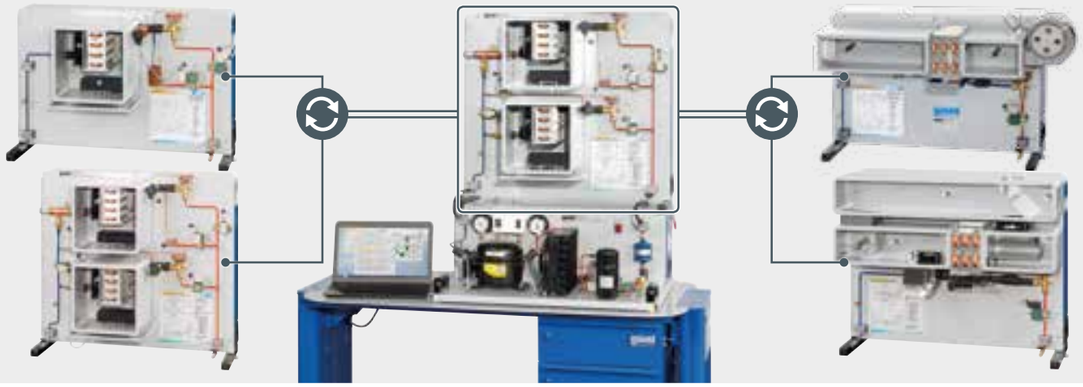

Chapter 5 | Thermodynamic applications in supply engineering HVAC

GUNT-RHLine Renewable Heat:

HL 320 Solar thermal energy and heat pump modular system

1 Fundamentals of thermodynamics

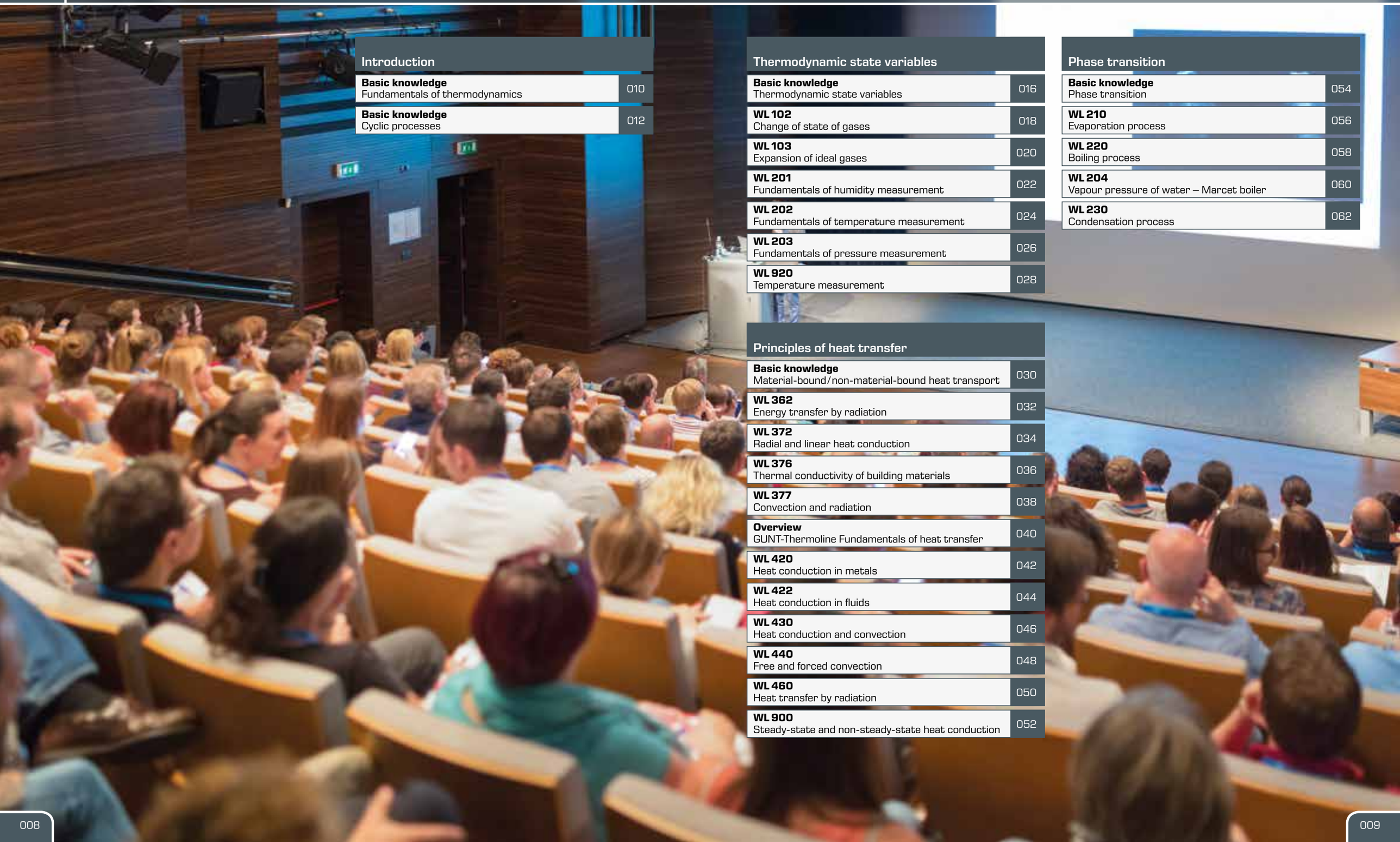

Introduction

Basic knowledge Fundamentals of thermodynamics	010
Basic knowledge Cyclic processes	012

Thermodynamic state variables

Basic knowledge Thermodynamic state variables	016
WL 102 Change of state of gases	018
WL 103 Expansion of ideal gases	020
WL 201 Fundamentals of humidity measurement	022
WL 202 Fundamentals of temperature measurement	024
WL 203 Fundamentals of pressure measurement	026
WL 920 Temperature measurement	028

Principles of heat transfer

Basic knowledge Material-bound/non-material-bound heat transport	030
WL 362 Energy transfer by radiation	032
WL 372 Radial and linear heat conduction	034
WL 376 Thermal conductivity of building materials	036
WL 377 Convection and radiation	038
Overview GUNT-Thermoline Fundamentals of heat transfer	040
WL 420 Heat conduction in metals	042
WL 422 Heat conduction in fluids	044
WL 430 Heat conduction and convection	046
WL 440 Free and forced convection	048
WL 460 Heat transfer by radiation	050
WL 900 Steady-state and non-steady-state heat conduction	052

Phase transition

Basic knowledge Phase transition	054
WL 210 Evaporation process	056
WL 220 Boiling process	058
WL 204 Vapour pressure of water – Marcet boiler	060
WL 230 Condensation process	062

Basic knowledge

Fundamentals of thermodynamics

Thermodynamics is the general theory of energy and material transformation processes: Work is performed by redistributing energy between its different manifestations. The fundamentals of thermodynamics were developed from the study of volume, pressure, and temperature in steam engines. The following topics are selected based on the devices listed in this chapter.

Thermodynamic systems and principles

- **system:** area of the thermodynamic examination
- **surroundings:** area outside the system
- **system boundaries:** separation of the system from its surroundings
- **process:** external impacts on the system
- **state:** collectivity of measurable properties within the system
- **state variables:** all measurable properties of the system that can be used to describe its state
- **change of state:** effect a process has on the state

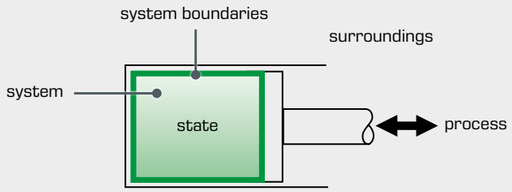

Open system

Energy or mass can be exchanged with the surroundings outside the system boundaries

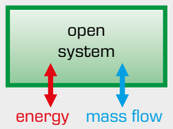

Closed system

No mass crosses the system boundary

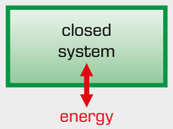

Isolated system

Neither mass nor energy cross the system boundaries

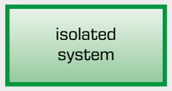

no exchange

Energy transfer in the form of heat or work has the following effects in the three systems:

The energy content of the mass flow changes

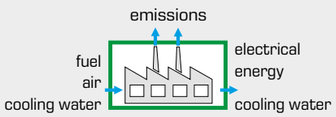

Example: thermal power plant

The internal system energy increases

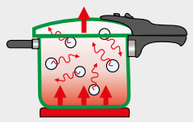

Example: pressure cooker

The energy is constant

Thermodynamic energy conversion can take place inside the system.

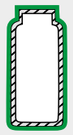

Example: an ideal thermos flask

Thermodynamic laws

1st law of thermodynamics

Conservation of energy in thermodynamic systems

Energy can neither be created nor destroyed, it can only be transformed.

The meaning for the three systems is illustrated in the lower left corner.

Open system

The energy content of the **mass flow** changes

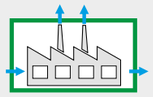

Closed system

The **internal energy** changes

Isolated system

The **energy** is constant

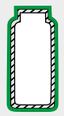

2nd law of thermodynamics

All natural and technical processes are irreversible.

The second law places a limitation on the first law because, in reality, some energy will dissipate into the surroundings during every process. This energy can neither be used nor transformed back.

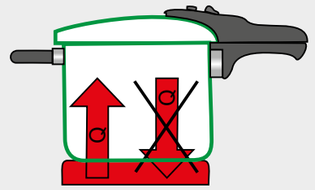

Referring to the example of the pressure cooker

after the inside of the cooker has warmed up, the heat in the cooker cannot flow back into the heating plate.

3rd law of thermodynamics = Nernst heat theorem

The absolute zero point of 0 Kelvin is a theoretical quantity. It cannot be achieved in practice. The lowest temperature achieved to date is $2 \cdot 10^{-5}$ K.

Zeroth law of thermodynamics = law of thermal equilibrium

System A is in thermal equilibrium with system B. System B is in thermal equilibrium with system C. This means that the two systems A and C must also be in thermal equilibrium with each other.

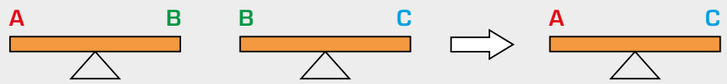

Chronologically, the zeroth law was only formulated after the other three. Since it is fundamental to thermodynamics, it was prepended to the other three laws. This law was therefore designated as 'zeroth' to avoid having to change the names of the laws that had already been assigned.

Basic knowledge

Cyclic processes

Technology uses **cyclic thermodynamic processes** to describe the conversion of thermal energy to mechanical energy and vice versa.

During this process a medium undergoes periodically different **changes of state**, such as compression and expansion, evaporation and condensation, or heating and cooling over a period of time. In a cyclic process, the medium, after having undergone the different changes of state, goes back to its original state and can thus be reused repeatedly.

Suitable media are substances that remain in a permanent gaseous state during the cyclic process, such as air or helium, or substances that change their aggregate state during the process (phase change), like water, ammonia, fluorocarbons, or CO_2.

When a **phase change** occurs, more energy is converted than during simple heating or cooling. This means that phase change processes involve a higher energy density and require lower differences in temperature.

Cyclic processes can be used in driving or driven machines. Driving machines convert thermal energy to mechanical energy, such as in steam power plants. Driven machines convert the supplied mechanical energy into thermal energy, like in a compression refrigeration system.

Representation of cyclic processes in state diagrams

A cyclic thermodynamic process can be illustrated clearly by what are known as state diagrams. The most commonly used state diagrams are:

- **p-v diagram:** pressure **p** against specific volume **v**, suitable for representing mechanical power. It is often used for reciprocating compressors and internal combustion engines with a purely gaseous working medium. Here, cyclic processes can be observed quite well because there is a fixed relationship between volume change and time. The enclosed area is a measure for the mechanical work performed, also known as useful work.
- **h-s diagram:** enthalpy **h** against entropy **s**, for representation of steam turbine processes. It is used for water steam and is well suited as a tool for designing steam turbines.
- **log p-h diagram:** logarithmic representation of the pressure **p** against the specific enthalpy **h**, particularly well suited for cooling processes in refrigeration engineering, as heat fluxes can be read from the diagram directly as horizontal lines. For the vertical pressure scale, a logarithmic division is used, as this is a good way to represent phase limit curves.
- **T-s diagram:** a plot of temperature **T** against entropy **s**, used for the representation of the thermodynamic conditions. The direction of the cyclic process indicates the type of system, driving or driven machine. If the cycle goes **clockwise**, the system is a driving machine, and if it goes **counter-clockwise**, it is a driven machine. In the clockwise direction, heat is absorbed at a high temperature and released at a low temperature. In the counter-clockwise direction, heat is absorbed at a low temperature and released at a high temperature. If the system is operated in the counter-clockwise direction, it is thus suitable as a heat pump or refrigeration machine. As in the p-v diagram, the enclosed area is a measure of the useful work performed.

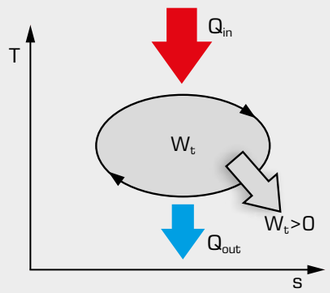

Clockwise direction: driving machine

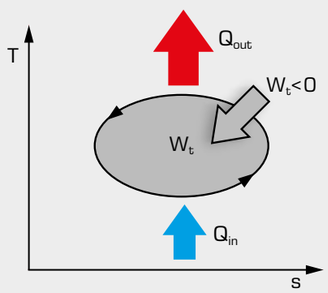

Counter-clockwise direction: driven machine

W_t useful work, **Q** thermal energy, **T** temperature, **s** entropy

Examples of cyclic thermodynamic processes

Type	Driving or driven machine	Working medium	Aggregate state
Steam power plant	driving	water	liquid / gaseous
Internal combustion engine	driving	air / combustion gas	gaseous
Gas turbine	driving	air / combustion gas	gaseous
Stirling engine	driving	air, helium	gaseous
ORC power plant (Organic Rankine Cycle)	driving	fluorocarbons, hydrocarbons	liquid / gaseous
Refrigeration machine	driven	fluorocarbons, hydrocarbons, ammonia, etc.	liquid / gaseous
Stirling refrigeration system	driven	air, helium	gaseous

The following section presents some technically relevant cyclic processes with their diagrams.

The Carnot process

In the T-s diagram, the Carnot process forms a rectangle. The area of the rectangle is a measure of the useful work W_t. The area between the temperature zero and the maximum process temperature is a measure of the required thermal energy **Q**. This means that the following efficiency **η** results are derived for the Carnot process:

$$\eta = \frac{W_t}{Q} = \frac{T_{max} - T_{min}}{T_{max}}$$

The maximum efficiency of a cyclic thermodynamic process thus only depends on the absolute maximum and minimum temperatures, T_{max} and T_{min}. This means that the Carnot process allows statements regarding the quality of any technical cyclic process. Furthermore, it is clear that every thermodynamic process requires a difference in temperatures to perform work. The efficiency of the Carnot process is the highest theoretically possible efficiency of a cyclic process.

The changes of state that are necessary for the Carnot process, like isothermal and isentropic compression and / or expansion, are difficult to realise technically. Despite its high efficiency, this process is therefore of theoretical interest only.

The p-v diagram on the right shows another crucial disadvantage of the Carnot process. Despite large differences in pressure and volume, the surface area of the diagram, and thus the mechanical work performed, is very small. When the Carnot process is applied, this translates to a large and heavy machine with a small output.

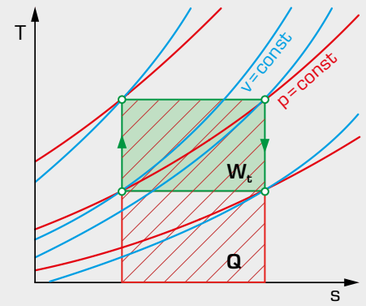

Carnot process in T-s diagram

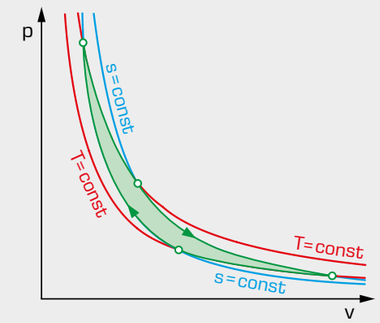

Carnot process in p-v diagram

W_t useful work, **Q** thermal energy, **T** temperature, **p** pressure, **v** specific volume, **s** entropy

Basic knowledge

Cyclic processes

Steam power plant

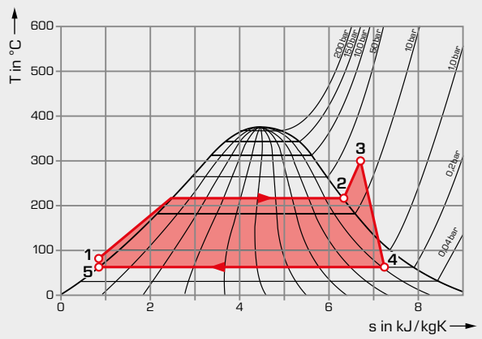

T-s diagram of a steam power plant

The above T-s diagram represents the Rankine cycle of a steam power plant. The working medium is water or water steam.

1 – 2 the water is **isobarically** heated and evaporated in a steam boiler at a pressure of 22 bar
2 – 3 **isobaric** superheating of the steam to 300°C
3 – 4 **polytropic** expansion of the steam in the steam turbine to a pressure of 0,2 bar; mechanical energy is released in the process
Point 4 wet steam area: the wet steam content is now only 90 %
4 – 5 condensation of the steam
5 – 1 increase of the pressure to boiler pressure via the condensate and feed water pump, the cyclic process is complete

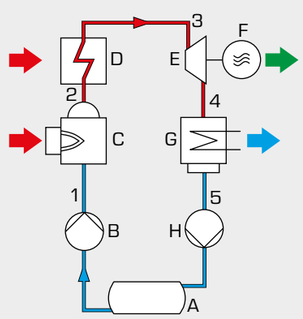

Process schematic for a steam power plant

A feed water tank, **B** feed water pump, **C** steam boiler, **D** superheater, **E** steam turbine, **F** generator, **G** condenser, **H** condensate pump;

thermal energy, low temperature,
thermal energy, high temperature,
mechanical/electrical energy

Gas turbine power plant

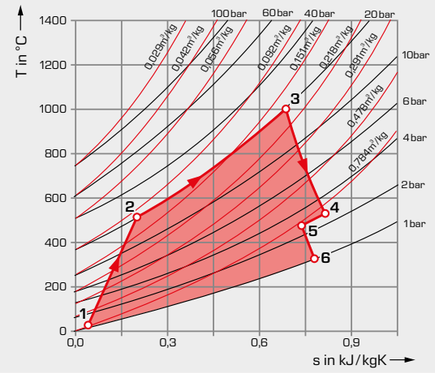

T-s diagram of a gas turbine power plant

The T-s diagram represents a gas turbine process with two-stage expansion in a double shaft system.

1 – 2 **polytropic** compression of air to a pressure of 20 bar; the air has a temperature of 500°C at the outlet of the compressor
2 – 3 **isobaric** heating of air to the inlet temperature of 1000°C of the high-pressure turbine via injection and combustion of fuel
3 – 4 **polytropic** expansion in the high-pressure turbine that drives the compressor
Point 5 in the transition to the power turbine the gas **isobarically** cools down slightly
5 – 6 second expansion in the power turbine: the exhaust gas exhausts and is not returned to the process again, which is why the process is known as an open gas turbine process; the process heat is released into the surroundings

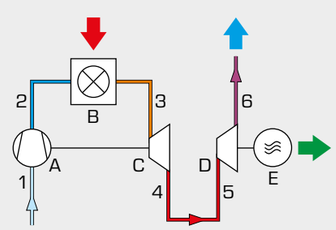

Process schematic for a gas turbine power plant

A compressor, **B** combustion chamber, **C** high-pressure turbine, **D** power turbine, **E** generator;

thermal energy, low temperature,
thermal energy, high temperature,
exhaust gas, mechanical / electrical energy

Internal combustion engine

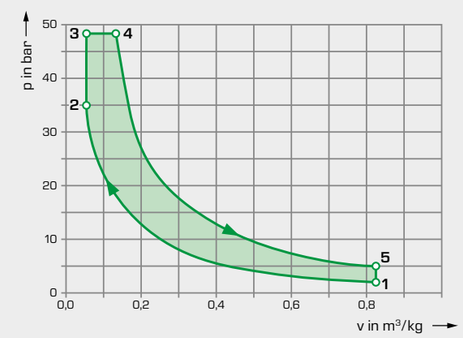

p-v diagram of an internal combustion engine

The p-v diagram shows the Seiliger process of an internal combustion engine. In the case of the internal combustion engine, all changes of state take place in the same space: the cylinder. The changes of state occur one after the other.

1 – 2 **polytropic** gas compression
Point 2 ignition with subsequent fuel combustion

idealised division of the combustion process into:
2 – 3 **isochoric** proportion of the combustion process
3 – 4 **isobaric** proportion of the combustion process

4 – 5 polytropic **(isentropic)** expansion, in this phase the usefull work results
5 – 1 **isochoric** decompression and exchange of working medium

In the case of a 2-stroke engine this takes place without an additional stroke, in a 4-stroke engine the exhaust and intake stroke follows. The Seiliger process, similar to the gas turbine process, is an open cyclic process.

The Seiliger process is a comparative or ideal process that is based on the assumption of a perfect engine. The indicator diagram represents the actual work process.

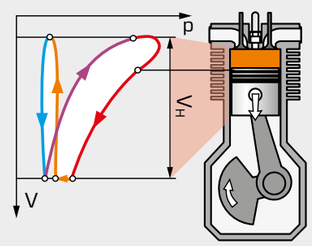

Indicator diagram of a 4-stroke engine

p pressure, **V** volume, **V_H** displaced volume;
intake, compression, power, exhaust

Refrigeration plant

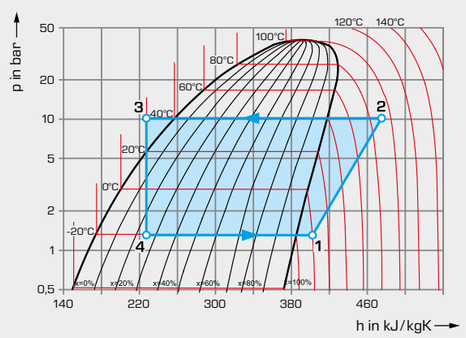

log p-h diagram of a refrigeration plant

This log p-h diagram displays a refrigeration cycle. Working medium is the fluorohydrocarbon refrigerant R134a.

1 – 2 **polytropic** compression
2 – 3 **isobaric** cooling and condensation with heat dissipation
3 – 4 **isenthalpic** expansion to evaporation pressure
4 – 1 **isobaric** evaporation with heat absorption

After being superheated to a certain degree the refrigerant vapour is once again sucked in and compressed by the compressor at point 1. The cyclic process ends.

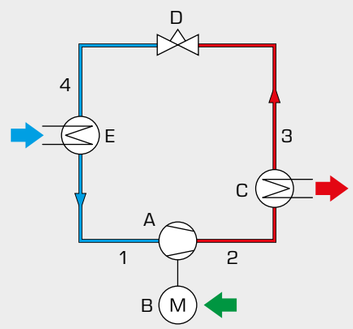

Process schematic of a refrigeration plant

A compressor, **B** drive motor, **C** condenser, **D** expansion valve, **E** evaporator;
thermal energy, low temperature,
thermal energy, high temperature,
mechanical / electrical energy

Basic knowledge

Thermodynamic state variables

Thermodynamic systems and principles

State variables are the measurable properties of a system. To describe the state of a system at least two independent state variables must be given.

State variables are e.g.:

- pressure (**p**)
- temperature (**T**)
- volume (**V**)
- amount of substance (**n**)

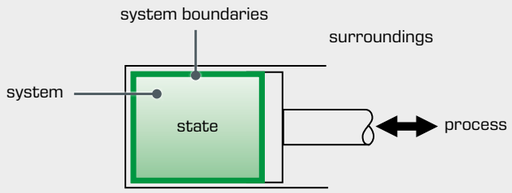

The state functions can be derived from the state variables:

- **internal energy (U):** the thermal energy of a static, closed system. When external energy is added, processes result in a change of the internal energy.
  ΔU = Q+W
  - **Q:** thermal energy added to the system
  - **W:** mechanical work done on the system that results in an addition of heat
- **enthalpy (H):** defined as the sum of internal energy plus work **p×V**
  H = U+p×V
- **entropy (S)**: provides information on the order in a system and the associated arrangement options of particles in that system
  The change in entropy **dS** is known as **reduced heat**.
  $dS = \delta Q_{rev}/T$
  - **δQ_{rev}:** reversible heat change
  - **T:** absolute temperature

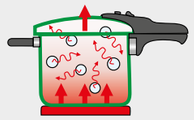

An increase in the internal energy of the system using a pressure cooker as an example.

Steam engine

When the steam engine was developed more than 200 years ago, physicists wondered why only a few percent of the thermal energy was converted into mechanical energy. Rudolf Clausius introduced the term entropy to explain why the efficiency of thermal engines is limited to a few percent. Thermal engines convert a temperature difference into mechanical work. Thermal engines include steam engines, steam turbines or internal combustion engines.

V6 engine of a racing car

Disassembled steam turbine rotor

Change of state of gases

In physics, an idealised model of a real gas was introduced to make it easier to explain the behaviour of gases. This model is a highly simplified representation of the real states and is known as an "ideal gas". Many thermodynamic processes in gases in particular can be explained and described mathematically with the help of this model.

Equation of state for ideal gases:
$p \times V = m \times R_s \times T$
- **m**: mass
- **R_s**: spec. gas constant of the corresponding gas

Changes of state of an ideal gas

Change of state	isochoric	isobaric	isothermal	isentropic
Condition	V = constant	p = constant	T = constant	S = constant
Result	dV = 0	dp = 0	dT = 0	dS = 0
Law	p/T = constant	V/T = constant	p×V = constant	$p \times V^{\kappa}$ = constant κ = isentropic exponent

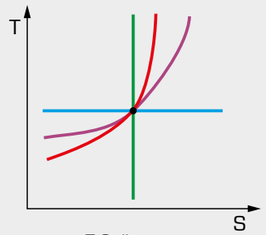

T-S diagram

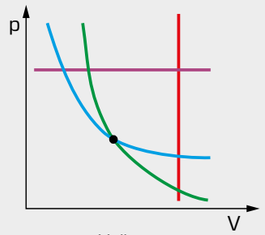

p,V diagram

Changes of state can be clearly illustrated in diagrams

Changes of state under real conditions

Change of state	polytropic
Condition	technical process under real conditions
Result	heat exchange with the environment
Law	$p \times V^n$ = constant n = polytropic exponent

The changes of state listed above are special cases of polytropic change of state, in which part of the heat is exchanged with the environment.

isochoric n → ∞
isobaric n = 0
isothermal n = 1
isentropic n = κ

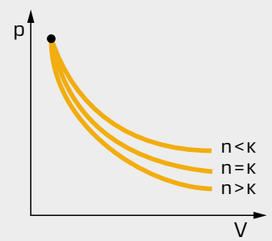

p,V-diagram

Polytropic changes of state with different heat exchange:
n<κ heat dissipation,
n>κ heat absorption

WL 102
Change of state of gases

Description

- **isothermal and isochoric change of state of air**
- **GUNT software for acquisition, processing and display of measured data**

Gas laws belong to the fundamentals of thermodynamics and are dealt with in every training course on thermodynamics.

The WL 102 experimental unit enables two changes of state to be studied experimentally: isothermal change of state, also known as the Boyle-Mariotte law, and isochoric change of state, which occurs at constant volume. Transparent tanks enable the change of state to be observed. Air is used as the test gas.

In the first tank, positioned on the left, the hermetically enclosed air volume is reduced or increased using a compressor and hydraulic oil. This results in an isothermal change of state. The compressor can also operate as a vacuum pump. If the changes occur slowly, the change of state takes place at an almost constant temperature.

In the second tank, positioned on the right, the temperature of the test gas is increased by a controlled electric heater and the resulting pressure rise is measured. The volume of the enclosed gas remains constant. Temperatures, pressures and volumes are measured electronically, digitally displayed and transferred to a PC for processing.

Learning objectives/experiments

- demonstrating the laws of state changes in gases experimentally
- isothermal change of state, Boyle-Mariotte law
- isochoric change of state, Gay-Lussac's 2nd law

WL 102
Change of state of gases

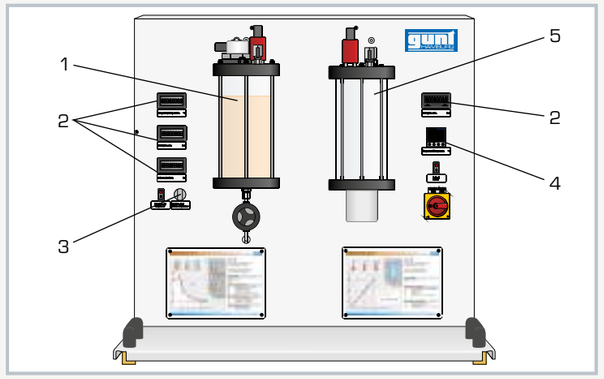

1 tank 1 for isothermic change of state, 2 digital displays, 3 5/2-way valve for switching between compression and expansion, 4 heating controller, 5 tank 2 for isochoric change of state

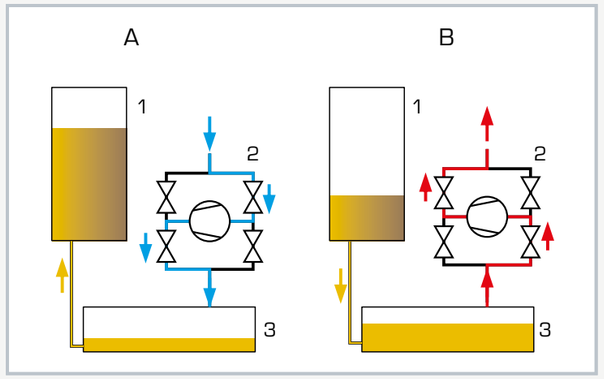

Representation of the change of volume
1 oil-filled tank for isothermic change of state, 2 valve arrangement with compressor, 3 storage tank; A compression (blue), B expansion (red)

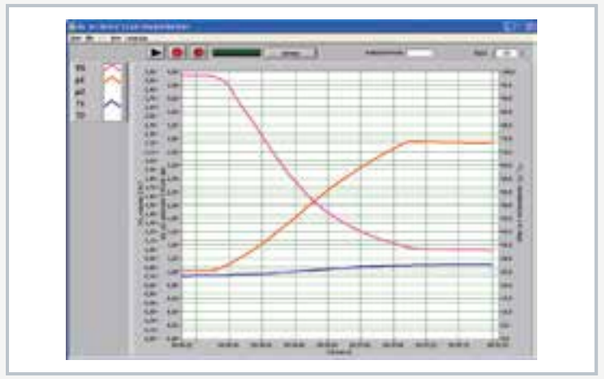

Software screenshot: charts for isothermic compression

Specification

[1] experimental investigation of gas laws
[2] transparent measuring tank 1 for investigation of isothermic change of state
[3] hydraulic oil filling for changing volume of test gas
[4] built-in compressor generates necessary pressure differences to move the oil volume
[5] compressor can also be used as vacuum pump
[6] 5/2-way valve for switching between compression and expansion
[7] transparent measuring tank 2 for investigation of isochoric change of state
[8] electrical heater with temperature control in tank 2
[9] sensors and digital displays for temperatures, pressures and volumes
[10] GUNT software for data acquisition via USB under Windows 7, 8.1, 10

Technical data

Compressor / vacuum pump
- power output: 60W
- pressure at inlet: 213mbar
- pressure at outlet: 2bar

Temperature controller: PID, 300W, limited to 80°C

Measuring ranges
- temperature:
  - tank 1: 0...80°C
  - tank 2: 0...80°C
- pressure:
  - tank 1: 0...4bar abs.
  - tank 2: 0...2bar abs.
- volume:
  - tank 1: 0...3L

230V, 50Hz, 1 phase
230V, 60Hz, 1 phase; 120V, 60Hz, 1 phase
UL/CSA optional
LxWxH: 900x550x900mm
Weight: approx. 50kg

Required for operation

PC with Windows recommended

Scope of delivery

1 experimental unit
1 GUNT software CD + USB cable
1 set of instructional material

WL 103
Expansion of ideal gases

Learning objectives/experiments

- determination of the adiabatic exponent according to Clément-Desormes
- adiabatic change of state of air
- isochoric change of state of air

Description

- **operation with negative pressure and positive pressure**
- **precise pressure measurement**
- **experiments according to Clément-Desormes**

Gas laws belong to the fundamentals of thermodynamics and are dealt with in every training course on thermodynamics.

The experimental unit WL 103 enables the user to examine the expansion of ideal gases. The focus is on the experimental determination of the adiabatic exponent of air using the Clément-Desormes method.

The main components of the experimental unit are two interconnected cylindrical tanks. Positive pressure can be applied to one tank, negative pressure can be applied to the other tank.

To generate the positive pressure and the negative pressure in the tanks, the tanks are connected to each other via a compressor. The pressure equalisation can either take place with the environment or with the other tank through a bypass. Due to the high velocity of the pressure compensation the change of state is quasi adiabatic. Ball valves are used for pressure equalisation.

Precise pressure measurement technology is integrated in the tanks to enable the determination of the adiabatic exponent using the Clément-Desormes method. The measured temperatures and pressures are recorded, transmitted to the software and displayed.

The GUNT software of WL 103 offers all the advantages of software-supported experimental procedure and analysis.

WL 103
Expansion of ideal gases

1 positive pressure tank, 2 safety valve, 3 ball valve, 4 manometer, 5 compressor, 6 negative pressure tank

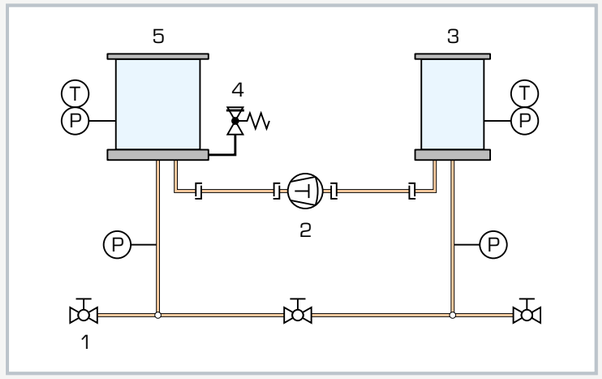

1 ball valve, 2 compressor, 3 negative pressure tank, 4 safety valve, 5 positive pressure tank; P pressure, T temperature

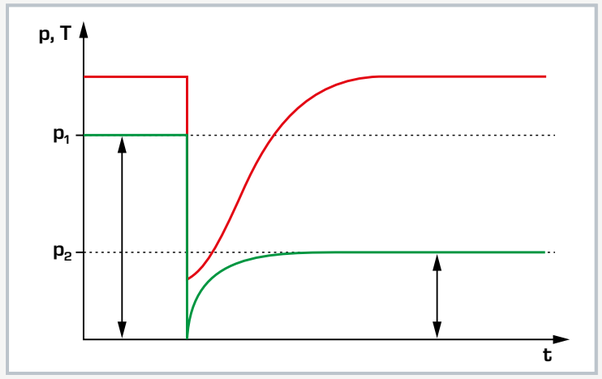

Schematic diagram of a typical experiment according to Clément-Desormes;
p pressure, T temperature, t time, red: temperature, green: pressure

Specification

[1] behaviour of ideal gases
[2] precise measurement of pressures and temperatures
[3] transparent components
[4] experiment according to Clément-Desormes
[5] determination of the adiabatic exponent of air
[6] GUNT software with control functions and data acquisition via USB under Windows 7, 8.1, 10

Technical data

Positive pressure tank
- volume: 20,5L
- diameter: 0,25m
- max. operating pressure: 0,9bar

Negative pressure tank
- volume: 11L
- diameter: 0,18m
- min. operating pressure: -0,6bar

Measuring ranges
- temperature: 0...150°C
- pressure: 0...1,6bar (abs)

230V, 50Hz, 1 phase
LxWxH: approx. 670x590x680mm
Weight: approx. 36kg

Required for operation

PC with Windows

Scope of delivery

1 experimental unit
1 GUNT software CD + USB cable
1 set of instructional material

WL 201
Fundamentals of humidity measurement

Description

- **different measuring methods for measuring humidity**
- **climatic chamber with adjustable humidity and transparent door**

The measurement of air humidity plays an important role in many branches of industry, e.g. during drying or in the air conditioning of buildings and vehicles. There are different measuring methods to determine humidity.

The trainer WL 201 enables the measurement of air humidity with four different instruments which can be directly compared to each other: two different hygrometers, a capacitive hygrometer and a psychrometer.

Psychrometers operate based on the principle of evaporation cooling and compare the ambient temperature with the wet bulb temperature to determine the humidity. Hygrometers utilise the property of specific fibres, e.g. hair, to expand with increasing air humidity. In the capacitive sensor the dielectricity constant of a layer and with it its capacity changes due to the water molecules absorbed.

The core element of the trainer is a climatic chamber with transparent door. This chamber can be humidified and dehumidified and contains the four instruments. A Peltier cooling element is used for dehumidification. An ultrasonic atomiser is used for humidification. To circulate the air and ensure good mixing a fan is used.

Learning objectives/experiments

- measuring methods for air humidity measurement
  - psychrometric humidity measurement
  - hygrometric humidity measurement
  - capacitive humidity measurement
- characteristic variables to describe air humidity
- changes of the state of humid air in the h-x diagram
- determination of the relative air humidity with
  - psychrometer
  - hair hygrometer
  - hygrometer with synthetic fibre
  - capacitive humidity sensor
- design and operation of the instruments
- comparison of the instruments

WL 201
Fundamentals of humidity measurement

1 capacitive humidity sensor, 2 displays and controls, 3 humidifier, 4 psychrometer, 5 hair hygrometer, 6 dehumidifier, 7 hygrometer with synthetic fibre and combined temperature sensor

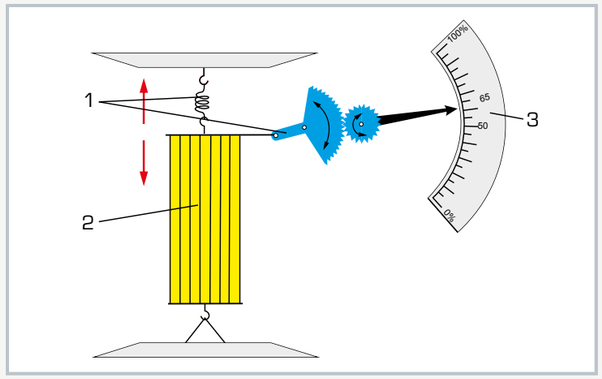

Principle of the hair hygrometer: 1 mechanism to measure the humidity-dependent change in length of the hair bundle, 2 hair bundle, 3 humidity scale

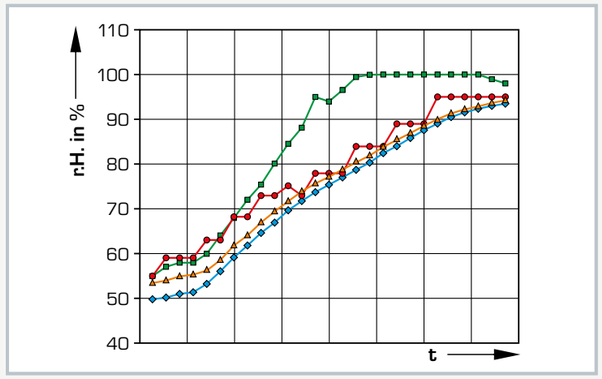

Relative humidity (r. h.) over time (t) with rising content of humidity; blue: capacitive sensor, orange: hygrometer with synthetic fibre, red: psychrometer, green: hair hygrometer

Specification

[1] different measuring methods for measuring humidity
[2] climatic chamber with adjustable humidity and transparent door
[3] humidification via ultrasonic atomiser
[4] dehumidification via Peltier cooling element
[5] fan for air recirculation
[6] 2 mechanical instruments: psychrometer, hair hygrometer
[7] 2 electronic instruments: capacitive sensor, hygrometer with synthetic fibre and combined temperature sensor

Technical data

Humidifier
- ultrasonic atomiser
- power consumption: 21,6W
- low water cut-off

Dehumidifier
- Peltier element
  - cooling capacity: 56,6W (50°C ambient temperature)
  - cooling surface: 1600mm^2

Hair hygrometer with deflective needle
- measuring range: 0...100% r. h.

Hygrometer with synthetic fibre
- output voltage: 0...10V
- measuring ranges: 0...100% r. h. / -30...80°C

Capacitive sensor with digital display
- output voltage: 0...10V
- measuring range: 1...100% r. h.

Psychrometer with thermometer
- measuring range: -10...60°C, graduation: 0,5°C

230V, 50Hz, 1 phase
120V, 60Hz, 1 phase; 230V, 60Hz, 1 phase
UL/CSA optional
LxWxH: 1400x800x1630mm
Weight: approx. 110kg

Scope of delivery

1 trainer
1 psychrometer
2 hygrometers
1 set of instructional material

WL 202
Fundamentals of temperature measurement

Description

- **experimental introduction to temperature measurement: methods, areas of application, characteristics**
- **clearly laid out unit primarily for laboratory experiments, also suitable for demonstration purposes**

Recording temperature is one of the basic tasks in metrology. Electric temperature sensors are the most widely used in automation applications but conventional thermometer types are still widely applied in many areas. The WL 202 experimental setup covers the full range of temperature measurement methods. As well as non-electrical measuring methods, such as gas- and liquid-filled thermometers and bimetallic thermometers, all typical electric measuring methods are covered in the experiments. The electrically measured temperatures are displayed directly on programmable digital displays. A temperature-proportionate output voltage signal (0...10V) is accessible from lab jacks, enabling temperature characteristics to be recorded with, for example, a plotter.

For measuring the relative air humidity a psychrometer with two thermometers is available, one of the thermometers measures the dry bulb. The wet bulb thermometer is covered in a wet cotton cloth and measures the evaporative cooling. The temperature difference allows the relative air humidity to be determined.

A digital multimeter with precision resistors is used to calibrate the electrical measuring devices. Various heat sources or storage units (immersion heater, vacuum flask and laboratory heater) permit relevant temperature ranges to be achieved for the sensors being tested. A tool box houses the sensors, cables, temperature measuring strips and immersion heater.

Learning objectives/experiments

- learning the fundamentals of temperature measurement by experimentation
- familiarisation with the various methods, their areas of application and special features
  - non-electrical methods: gas- and liquid-filled thermometers, bimetallic thermometers and temperature measuring strips
  - electric methods: thermocouple, resistance temperature detector Pt100, thermistor (NTC)
- determining air humidity with a psychrometer
- calibrating electric temperature sensors

WL 202
Fundamentals of temperature measurement

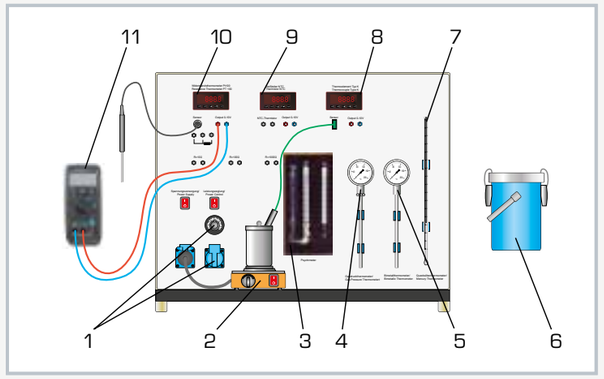

1 power-regulated socket, 2 laboratory heater for water and sand, 3 psychrometer to determine air humidity, 4 gas pressure thermometer, 5 bimetal thermometer, 6 vacuum flask, 7 mercury thermometer, 8 digital display, thermocouple type K, 9 digital display, thermistor (NTC), 10 digital display, Pt100, 11 multimeter

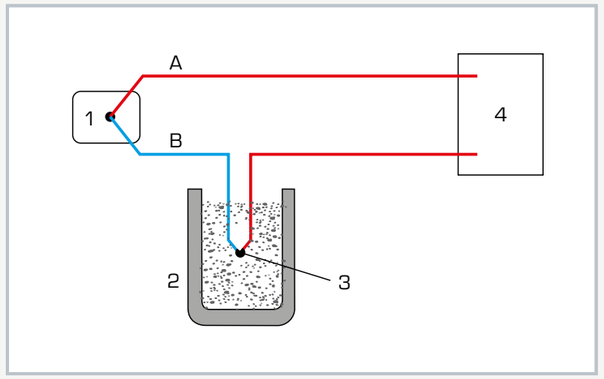

Temperature measurement with a thermocouple type K: A) nickel chrome, B) nickel; 1 measuring point, 2 tank at constant temperature, 3 reference point, 4 voltmeter

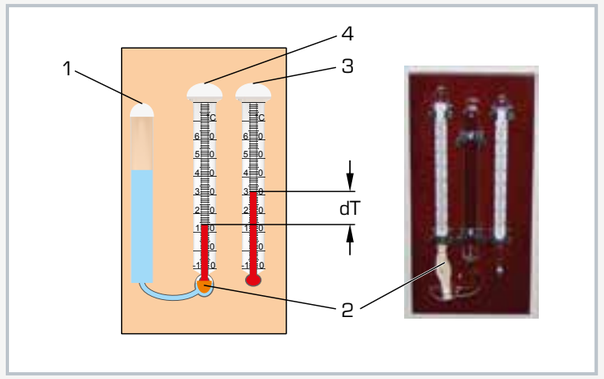

Psychrometer: 1 water tank, 2 wet cotton cloth for covering the wet bulb thermometer, 3 dry bulb thermometer, 4 wet bulb thermometer; dT temperature difference

Specification

[1] experiments in the fundamentals of temperature measurement with 7 typical measuring devices
[2] various heat sources or storage units: laboratory heater, immersion heater, vacuum flask
[3] calibration units: precision resistors and digital multimeter
[4] liquid, bimetallic and gas pressure thermometers
[5] temperature sensors: Pt100, thermocouple type K, thermistor (NTC)
[6] various temperature measuring strips
[7] psychrometer for humidity measurement
[8] tool box for sensors, cables, measuring strips and immersion heater

Technical data

Immersion heater
- power output: 300W
- adjustment of power feed via power-regulated socket

Laboratory heater with thermostat
- power output: 450W
- max. temperature: 425°C

Vacuum flask: 1L

Measuring ranges
- resistance temperature detector Pt100: 0...100°C
- thermocouple type K: 0...1000°C
- thermistor (NTC): 20...55°C
- liquid thermometer: -10...250°C
- bimetallic, gas pressure thermometer: 0...200°C
- temperature measuring strips: 29...290°C

Precision resistors: 10 Ω, 100 Ω, 1000 Ω
Psychrometer:
- 2x temperature: 0...60°C
- rel. humidity: 3...96%

230V, 50Hz, 1 phase
230V, 60Hz, 1 phase; 120V, 60Hz, 1 phase
UL/CSA optional
LxWxH: 800x450x650mm
Weight: approx. 45kg

Scope of delivery

1 experimental unit
1 tool box
1 set of cables
1 laboratory heater
1 immersion heater
1 vacuum flask
1 digital multimeter
1 set of instructional material

WL 203
Fundamentals of pressure measurement

Description

- **comparison of different pressure measurement methods**
- **measuring positive and negative pressure**
- **calibration device with Bourdon tube pressure gauge for calibrating mechanical manometers**

Measuring pressure is important in the engineering industry, e.g. in plant, turbomachine and aircraft construction and in process engineering. Other fundamental factors such as flow rate or flow velocity can also be determined based on a pressure measurement.

The WL 203 experimental unit enables the user to measure the pressure with two different measuring methods: directly by measuring the length of a liquid column (U-tube manometer, inclined tube manometer) and indirectly by measuring the change of shape of a Bourdon tube (Bourdon tube pressure gauge).

In a U-tube manometer, the pressure causes the liquid column to move. The pressure difference is read directly from a scale and is the measure for the applied pressure. In inclined tube manometers, one leg points diagonally up. A small height difference therefore changes the length of the liquid column significantly.

The principle of the Bourdon tube pressure gauge is based on the change in cross-section of the bent Bourdon tube under pressure. This change in cross-section leads to an expansion of the Bourdon tube diameter. A Bourdon tube pressure gauge is therefore an indirectly acting pressure gauge where the pressure differential is indicated via a transmission gearing and a pointer.

In experiments, pressures in the millibar range are generated with a plastic syringe and displayed on the manometers. The experimental unit is equipped with two Bourdon tube pressure gauges for measuring positive and negative pressure. The U-tube manometer, inclined tube manometer and Bourdon tube pressure gauges at the experimental unit can be combined using tubes. A calibration device enables calibration of an additional Bourdon tube pressure gauge using a weight-loaded piston manometer.

Learning objectives/experiments

- familiarisation with 2 different measuring methods:
  - direct method with U-tube manometer and inclined tube manometer
  - indirect method with Bourdon tube pressure gauge
- principle of a Bourdon tube pressure gauge
- calibrating mechanical manometers

WL 203
Fundamentals of pressure measurement

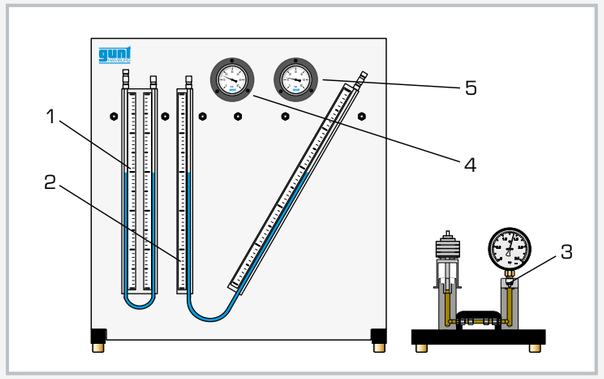

1 U-tube manometer, 2 inclined tube manometer, 3 calibration device with Bourdon tube pressure gauge, 4 Bourdon tube pressure gauge for positive pressure, 5 Bourdon tube pressure gauge for negative pressure

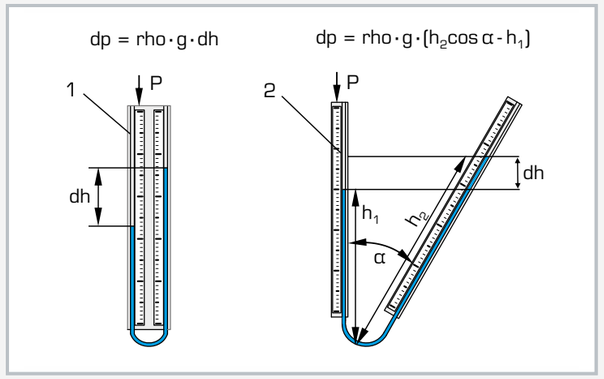

Principle of operation of liquid column manometers
1 U-tube manometer, 2 inclined tube manometer; dp pressure difference, dh height difference, rho density of measuring fluid, g acceleration of gravity

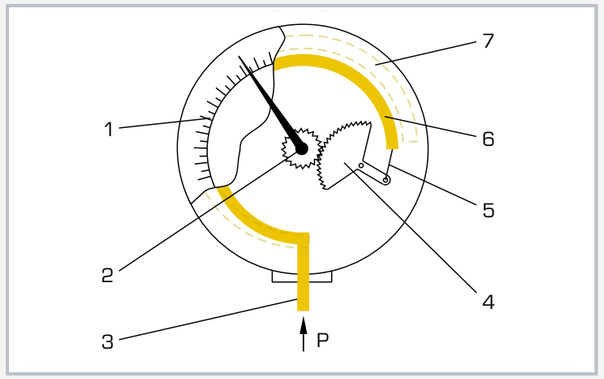

Principle of operation of a Bourdon tube pressure gauge
1 scale, 2 pointer, 3 Bourdon tube fixed in place, 4 gearing, 5 tie rod, 6 Bourdon tube without pressure, 7 Bourdon tube expanded under pressure

Specification

[1] basic experiments for measuring pressure with three different measuring instruments
[2] U-tube and inclined tube manometer
[3] one Bourdon tube pressure gauge each for positive and negative pressure
[4] plastic syringe generates test pressures in the millibar range
[5] calibration device with Bourdon tube pressure gauge for calibrating mechanical manometers

Technical data

Inclined tube manometer
- angle: 30°

Measuring ranges
- pressure:
  - 0...±60mbar (Bourdon tube pressure gauge)
  - 0...500mmWC (U-tube manometer)
  - 0...500mmWC (inclined tube manometer)

LxWxH: 750x610x810mm
LxWxH: 410x410x410mm (calibration device)
Total weight: approx. 40kg

Scope of delivery

1 experimental unit
1 calibration device
1 set of weights
1 oil, 500mL
1 ink, 30mL
1 funnel
1 syringe
1 set of hoses
1 set of instructional material

WL 920
Temperature measurement

Learning objectives/experiments

- familiarisation with different temperature measurement methods:
  - non-electrical methods: liquid thermometers, bimetal thermometers
  - electronic methods: thermocouple, Pt100 resistance thermometer, NTC thermistor
- determination of air humidity with a psychrometer
- familiarisation with the function of the individual temperature measuring instruments
- response behaviour of the sensors
- steady and transient behaviour

Description

- **comparison of different temperature measurement methods**
- **investigation of transient temperature behaviour and defined temperature jumps**

Different physical processes are used to measure temperatures. Temperatures can be read off directly on a scale, e.g. by the expansion of a measuring medium.

In industry, temperatures are often measured electronically. The advantage of electronic measurement is that further processing or transmission of signals to remote locations (controllers, external displays) is easier.

The WL 920 trainer can be used to carry out and compare different temperature measurement procedures.

The trainer includes liquid thermometers, bimetal thermometers, as well as a thermocouple,a Pt100 resistance thermometer and an NTC thermistor, each with different protective sleeves, for electronic temperature measurement. A psychrometer with two liquid thermometers is used to measure the relative air humidity.

To compare the different measuring methods, the temperature sensors being studied are attached to a height-adjustable device above the experimental tank. A fan ensures almost constant ambient conditions. A second tank with electronically controlled heater supplies water temperatures up to approx. 80°C.

The heated water at a specified temperature is fed into the experimental tank. By lowering the height-adjustable device, the temperature sensors are immersed in the water and the temperature measurement begins.

The measured values can be read as analogue or digital values. A 3-channel line recorder can record the measured values of the electronic temperature sensors continuously over time and thus also document the different time response. Defined temperature jumps and steady and transient temperature behaviour can be studied.

WL 920
Temperature measurement

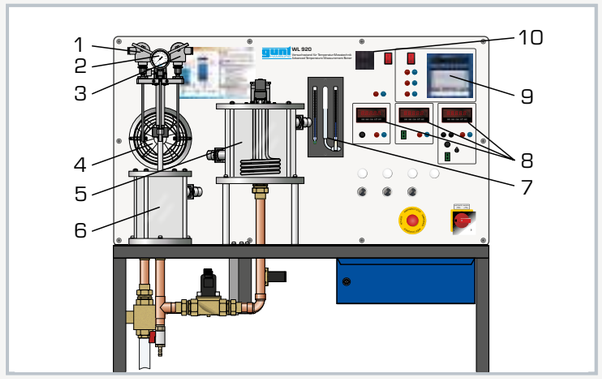

1 Pt100 resistance thermometer, 2 bimetal thermometers, 3 thermocouple, 4 fan, 5 heating tank, 6 experimental tank, 7 psychrometer, 8 digital displays, 9 3-channel line recorder

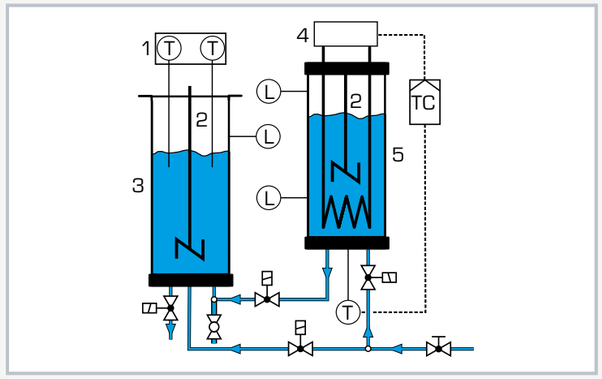

1 temperature sensor being studied, 2 stirring machine, 3 experimental tank, 4 heater, 5 heating tank; T temperature, L level, TC temperature controller, blue: water

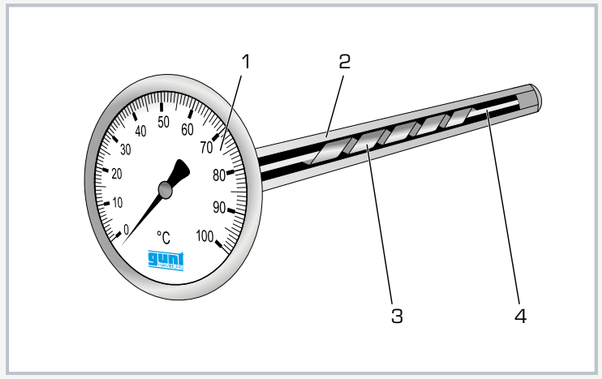

Design of the bimetal thermometer
1 scale housing, 2 protective tube, 3 bimetallic strips, 4 fixed bearing

Specification

[1] steady and transient temperature measurement with typical measurement instruments
[2] temperature sensors: liquid thermometer, bimetal thermometer, Pt100, thermistor (NTC), type K thermocouple
[3] psychrometer for determining the relative air humidity
[4] defined temperature jumps up to 80°C
[5] experimental tank and heating tank with temperature control, water-filled
[6] both tanks equipped with stirring machine
[7] fan generates constant air temperature above the experimental tank
[8] 3-channel line recorder for recording the measured values

Technical data

Heater
- output: 2kW at 230V, 1,5kW at 120V
- tank capacity: 4L

Temperature controller
- PID

Line recorder
- 3 channels
- serial interface

Temperature sensors
- liquid thermometer with organic liquid
- bimetal thermometer
- psychrometer
- thermocouple type K
- thermistor (NTC)
- Pt100

Measuring ranges
- temperature: 0...100°C
- rel. humidity: 3...96%

230V, 50Hz, 1 phase
230V, 60Hz, 1 phase; 120V, 60Hz, 1 phase
LxWxH: 1200x700x1550mm
Weight: approx. 185kg

Required for operation

water connection, drain

Scope of delivery

1 trainer
1 set of accessories
1 set of instructional material

Basic knowledge

Material-bound/non-material-bound heat transport

Material-bound heat transport

by conduction and convection

Conduction

In the case of thermal conduction, heat transport takes place through direct interaction between the molecules (e.g. molecule collisions) within a solid or a fluid at rest. A prerequisite for this is that there is a temperature difference within the substance or that substances of different temperatures come into direct contact with each other. All aggregate states allow this transfer mechanism.

The amount of heat transported depends on:

- the thermal conductivity **λ** of the material,
- the heat conducting length **L**,
- the heat transferring area **A**,
- the dwell time **t** and
- the temperature difference **ΔT** between the beginning and end of the thermal conductor

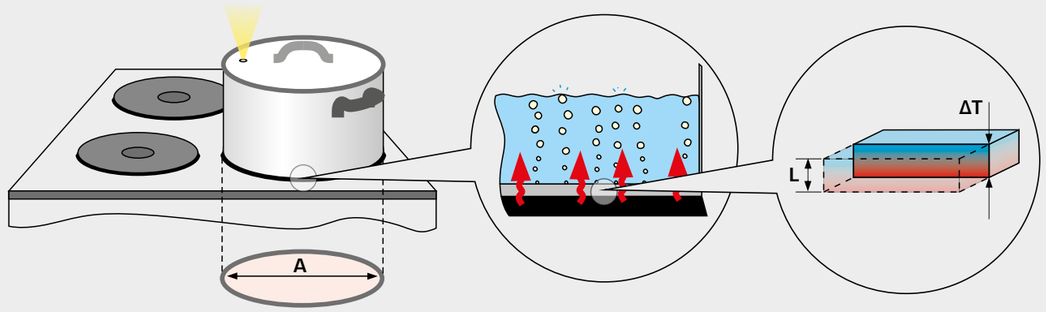

The hot stove transfers the heat to the water through the bottom of the saucepan with the cross-sectional area **A**.

The red arrows indicate the direction of the heat flux.

The heat is transferred from the hot to the cold material along the heat-conducting length **L** due to the interaction of the molecules via the temperature difference **ΔT**.

Convection

Heat transport takes place in flowing liquids or gases by means of material movement, i.e. material transport. Where **forced convection** occurs, the flow is forced by external forces. Examples: a pump in a warm water heater, fans in a power pack or PC.

If the flow is caused by differences in density due to different temperatures within the fluid this is called **free or natural convection.** Examples: water movement when heated in a pot, by a foehn wind, the gulf stream, or a vent in a chimney.

Cold air is sucked in by the fan, cools the internal components and flows out again as heated air.

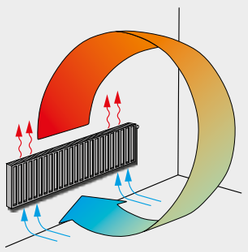

The air molecules warmed by the heater rise due to differences in density.

Non-material-bound heat transport

by thermal radiation

Radiation

Energy transport through electromagnetic oscillation in a specific wavelength range. Any body with a temperature above zero Kelvin emits radiation known as thermal radiation.

Thermal radiation includes UV radiation, light radiation and infrared radiation. Light radiation covers the wavelength range visible to the human eye.

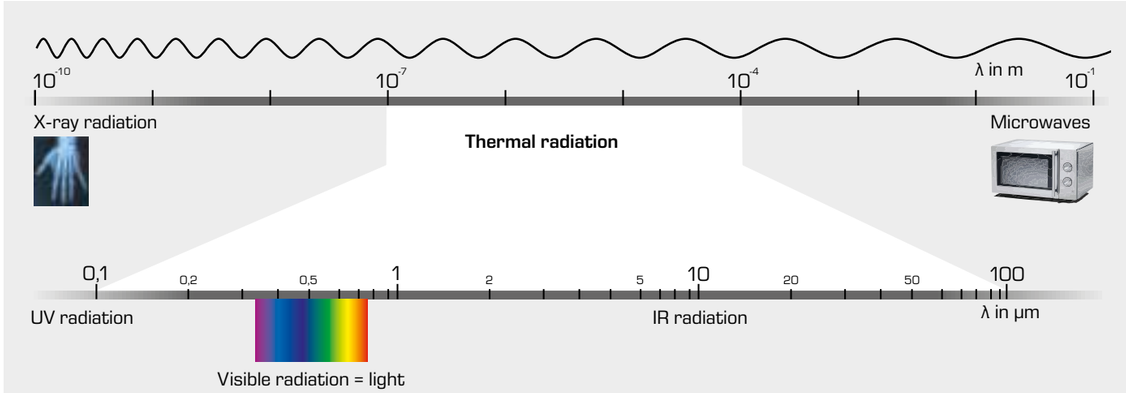

Using a thermal imaging camera, it is possible to make thermal radiation visible: the thermal camera converts long-wave infrared radiation into visible radiation.

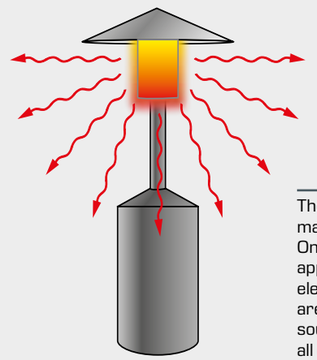

The best example of thermal radiation is the sun.
One example of a technical application is a patio heater: electromagnetic oscillations are emitted by the heat source as thermal radiation in all directions.
The portion of the thermal radiation directed upwards is reflected by the canopy.

Material characteristics

Heat transfer coefficient α: a measure of how much heat is transferred from a solid to a fluid or vice versa (convection)

Thermal conductivity λ: a measure of how well heat is transferred into a solid (conduction)

Overall heat transfer coefficient k: describes the overall heat transfer between fluids separated by solids (convection and conduction)

Reflectance, absorbance and transmittance: a measure of the proportion of thermal radiation reflected, absorbed or transmitted to a body (radiation)

WL 362
Energy transfer by radiation

Description

- **investigation of thermal and light radiation**
- **influence of distance and angle of incidence**
- **broad range of experiments**

Thermal radiation is a non-material-bound energy transport by means of electromagnetic oscillations in a certain wavelength range. Any body with a temperature above zero Kelvin emits radiation known as thermal radiation. Thermal radiation includes UV radiation, light radiation and infrared radiation. Light radiation covers the wavelength range visible to the human eye.

The WL 362 experimental unit contains two radiation sources: a heat radiator and a light emitter. Thermal radiation is detected by means of a thermopile. Light radiation is recorded by means of a luxmeter with photodiode. Various optical elements such as apertures, absorption plates or colour filters can be set up between the emitter and the detector. All components are mounted on an optical bench. The distance between the optical elements can be read from a scale along the optical bench.

Luxmeter, thermopile and light emitter can be rotated to study how the angle of incidence affects the radiation intensity. The angles are read off the angular scale.

The optical elements are used to investigate the reflection, absorption and transmission of different materials at different wavelengths and temperatures. The radiant power of both emitters can be adjusted. The aim of the experiments is to check optical laws: e.g. Kirchhoff's law of radiation, the Stefan-Boltzmann law, Lambert's distance and direction law.

The measured values are displayed digitally on the measuring amplifier. The measured values are transmitted directly to a PC via USB where they can be analysed using the software included.

Learning objectives/experiments

- Lambert's direction law
- Lambert's distance law
- Stefan-Boltzmann law
- Kirchhoff's laws
  - radiation absorption
  - radiation reflection
  - radiation emission

WL 362
Energy transfer by radiation

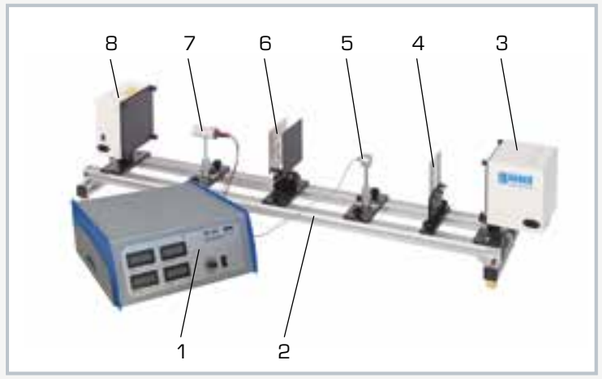

1 measuring amplifier, 2 optical bench with scale for reading the distances, 3 pivoting light source, 4 holder for slit diaphragm or optional colour filter (red, green, infrared), 5 luxmeter, 6 absorption plates and reflection plate each with temperature measuring point, 7 thermopile, 8 thermal radiator

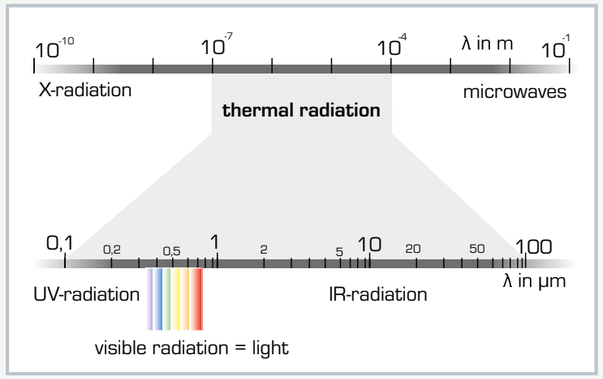

Spectrum of thermal radiation
top scale wavelength λ in m, bottom scale wavelength λ in µm

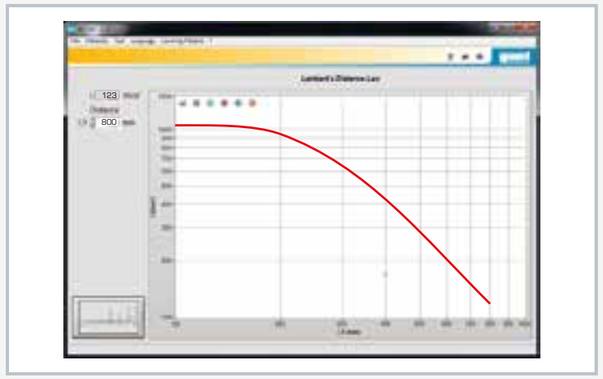

Software screenshot: investigations on the distance to the radiation source

Specification

[1] thermal radiator and thermopile for the investigation of thermal radiation
[2] light source and luxmeter for the investigation of illuminance
[3] absorption plate and reflection plate with thermocouples for the investigation of Kirchhoff's laws
[4] adjustable radiant power of thermal radiator and light source
[5] 3 colour filters with holder (red, green, infrared), slit diaphragm
[6] luxmeter for measuring illuminance
[7] thermocouple for measuring the temperature
[8] thermopile for measuring radiant power
[9] GUNT software for data acquisition via USB under Windows 7, 8.1, 10

Technical data

Thermal radiator
- material: $AlMg_3$, black anodized
- output: 400W at 230V, 340W at 120V
- max. achievable temperature: 300°C
- radiant area, LxW: 200x200mm

Light source
- halogen lamp
  - output: 42W
  - luminous flux: 630lm
  - colour temperature: 2900K
- range of rotation on both sides: 0... 90°
- optional illuminated surface
  - diffusing lens, LxW: 193x193mm or
  - orifice plate, Ø 25mm

Optical elements to insert
- slit diaphragm
- 3 colour filters: red, green, infrared
- absorption plate and reflection plate with thermocouple type K, matt black lacquered

Measuring ranges
- illuminance: 0...1000 lux
- temperature: 2x 0...200°C
- radiant power: 0...1000W/m^2

230V, 50Hz, 1 phase
230V, 60Hz, 1 phase; 120V, 60Hz, 1 phase
UL/CSA optional
LxWxH: 1460x310x390mm
LxWxH: 420x400x170mm (measuring amplifier)
Weight: approx. 27kg

Required for operation

PC with Windows recommended

Scope of delivery

1 experimental unit
1 set of accessories
1 GUNT software CD + USB cable
1 set of instructional material

WL 372
Radial and linear heat conduction

Description

- **investigation of heat conduction in solid bodies**
- **linear and radial heat conduction**
- **GUNT software for displaying temperature profiles**

Heat conduction is one of the three basic forms of heat transfer. Kinetic energy is transferred between neighbouring atoms or molecules. The heat transport is material-bound. This type of heat transfer is an irreversible process and transports heat from the higher energy level, i.e. higher absolute temperature, to the lower level with lower temperature. If the heat transport is maintained permanently by means of the supply of heat, this is called steady heat conduction. The most common application of heat conduction in engineering is in heat exchangers.

The WL 372 experimental unit can be used to determine basic laws and characteristic variables of heat conduction in solid bodies by way of experiment. The experimental unit comprises a linear and a radial experimental setup, each equipped with a heating and cooling element. Different measurement objects with different heat transfer properties can be installed in the experimental setup for linear heat conduction. The experimental unit includes with a display and control unit.

Sensors record the temperatures at all relevant points. The measured values are read from digital displays and can be transmitted simultaneously via USB directly to a PC, where they can be analysed using the software included.

Learning objectives/experiments

- linear heat conduction (plane wall)
  - determination of temperature profiles for different materials
  - determination of the temperature profile in case of a disturbance
  - determination of the thermal conductivity λ
- radial heat conduction
  - determination of the temperature profile
  - determination of the thermal conductivity λ

WL 372
Radial and linear heat conduction

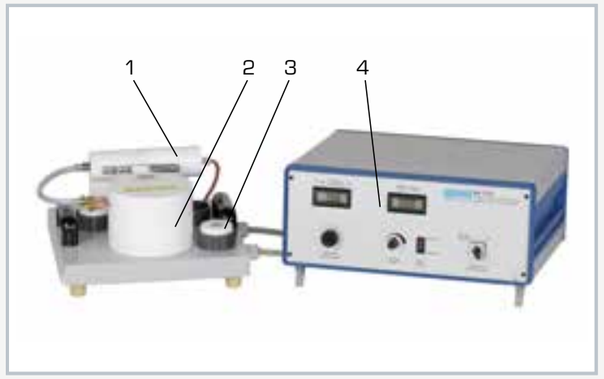

1 display and control unit, 2 measurement object, 3 experimental setup for radial heat conduction, 4 experimental setup for linear heat conduction

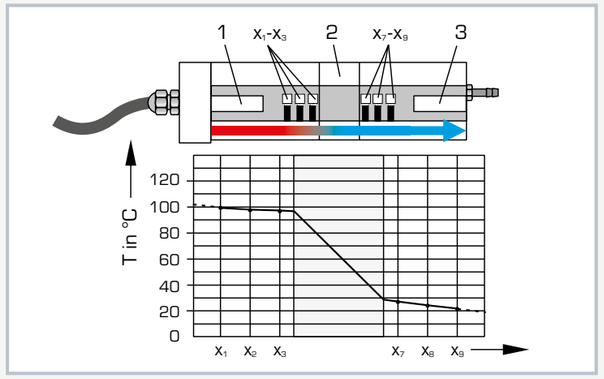

Experimental setup for linear heat conduction with graphic representation of the temperature profile: 1 heater, 2 measurement object, 3 cooling element; x_1-x_3 and x_7-x_9: measuring points

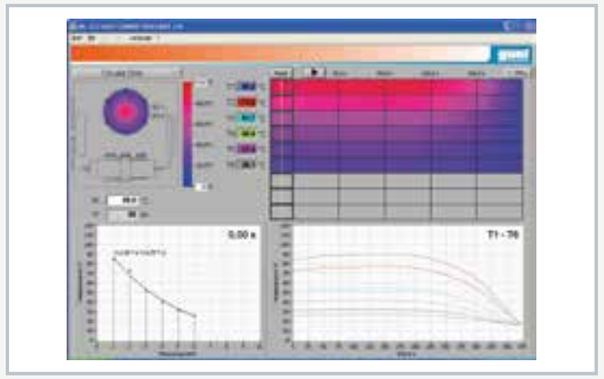

Software screenshot: temperature profile for radial heat conduction

Specification

[1] investigation of heat conduction in solid bodies
[2] experimental setup consisting of experimental unit and display and control unit
[3] linear heat conduction: 3 measurement objects, heating and cooling element, 9 temperature measuring points
[4] radial heat conduction: brass disc with heating and cooling element, 6 temperature measuring points
[5] cooling by means of tap water
[6] electrical heating element
[7] representation of the temperature profiles with GUNT software
[8] GUNT software for data acquisition via USB under Windows 7, 8.1, 10

Technical data

Linear heat conduction
- 3 measurement objects, insulated
- 1x DxL: 25x30mm, steel
- 1x DxL: 15x30mm, brass
- 1x DxL: 25x30mm, brass
- heater: 140W

Radial heat conduction
- disc DxL: 110x4mm
- heater in the centre of the disc: 125W
- cooling coil on the outer edge of the disc

Measuring ranges
- temperature: 0...100°C
- power: 0...200W

230V, 50Hz, 1 phase
230V, 60Hz, 1 phase
120V, 60Hz, 1 phase
UL/CSA optional
LxWxH: 400x360x210mm (experimental unit)
LxWxH: 470x380x210mm (display and control unit)
Weight: approx. 22kg

Required for operation

water connection, drain
PC with Windows recommended

Scope of delivery

1 experimental unit
1 display and control unit
1 set of measuring objects
1 set of hoses
1 GUNT software CD + USB cable
1 set of instructional material

WL 376
Thermal conductivity of building materials

Learning objectives/experiments

- determine the thermal conductivity λ of different materials
- determine the thermal resistance
- thermal conductivity λ for several samples connected in series (up to a thickness of 50mm)

Description

- **heat conduction in non-metallic building materials**
- **material thicknesses or combinations up to a thickness of 50mm can be used**

Thermal insulation in building planning is a sub-area of construction physics; it uses appropriate measures such as component design to enable a comfortable room climate all year round while at the same time consuming little energy. This is achieved by using building materials with high thermal resistance and low transmission by heat radiation.

The WL 376 device is used to investigate various non-metallic building materials with regard to their thermal conductivity in accordance with DIN 52612. The scope of delivery includes samples made of different materials: insulating panels made of Armaflex, chipboard, PMMA (acrylic glass), styrofoam, Polystyrene-PS, Polyoxymethylene-POM, cork and plaster. The samples all have the same dimensions and are placed between a heated plate and a water-cooled plate. A clamping device ensures reproducible contact pressure and heat contact.

The hot plate is heated by an electric heating mat. In the cold plate, the temperature is achieved by water cooling. Sensors measure the temperatures at the cooling water inlet and outlet and in the centre of both plates.

The temperatures for the hot plate above the sample and for the cold plate underneath the sample are set using the software provided. A temperature control system ensures constant temperatures.

The heat flux between the hot plate and the cold plate passes through the sample and is measured by a special heat flux sensor. The entire housing, including the cover, is thermally insulated to ensure constant ambient conditions.

The measured values are transmitted directly to a PC via USB where they can be analysed using the software included.

WL 376
Thermal conductivity of building materials

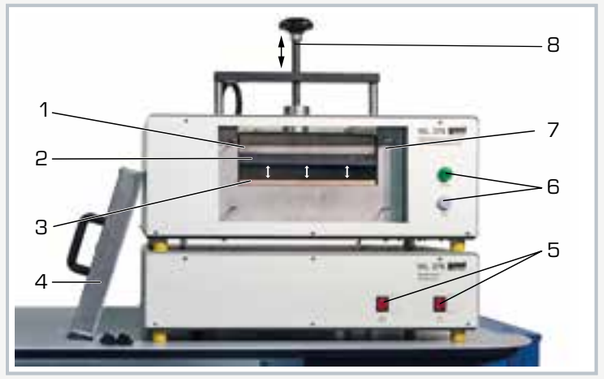

1 hot plate insulation, 2 hot plate, 3 sample, in this case chipboard (cold plate not visible), 4 cover for insulating housing, 5 main switch and heater switch, 6 indicator lights, 7 insulating housing, 8 contact spindle

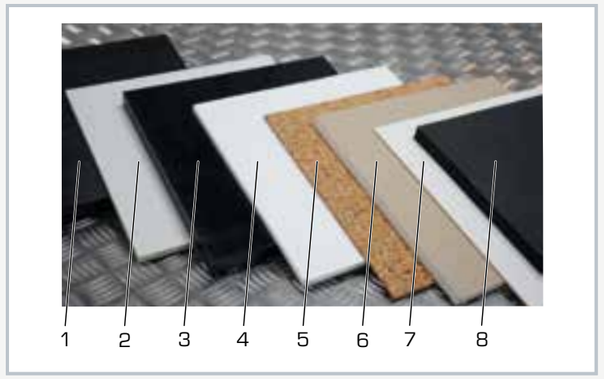

Insulating materials included in the scope of delivery:
1 Armaflex, 2 PMMA (polymethyl methacrylate), 3 POM (polyoxymethylene), 4 styrofoam, 5 cork, 6 plaster, 7 chipboard, 8 PS (polystyrene)

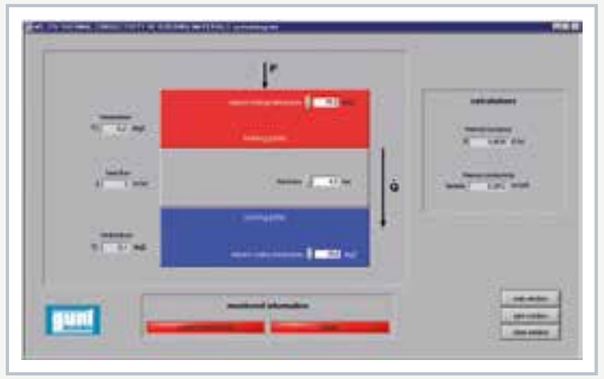

Software screenshot: system diagram

Specification

[1] determine the thermal conductivity λ in building materials
[2] thermal conductivity λ and thermal resistance measurement according to DIN 52612
[3] reproducible contact pressure via clamping device
[4] 8 samples to be inserted between hot and cold plate
[5] hot plate with heating mat
[6] cold plate with water cooling and heat flux sensor
[7] software controller for temperature adjustment of cold and hot plate
[8] 3 temperature sensors for cooling water: at the inlet, outlet and centre of the plate
[9] 2 temperature sensors for the surface temperature of the hot and cold plate
[10] GUNT software for data acquisition via USB under Windows 7, 8.1, 10

Technical data

Electric heating mat
- output: 500W
- max. temperature: 80°C

Samples
- LxW: 300x300mm
- thickness: up to max. 50mm
- material: Armaflex, chipboard, PMMA, styrofoam, PS, POM, cork, plaster

Measuring ranges
- temperature: 3x 0...100°C, 2x 0...200°C
- heat flux density: 0...1533W/m^2

230V, 50Hz, 1 phase
230V, 60Hz, 1 phase; 120V, 60Hz, 1 phase
UL/CSA optional
LxWxH: 710x440x550mm
LxWxH: 710x440x200mm (control unit)
Total weight: approx. 90kg

Required for operation

water connection, drain
PC with Windows

Scope of delivery

1 experimental unit
1 set of accessories
1 GUNT software CD + USB cable
1 set of instructional material

WL 377
Convection and radiation

Description

- **heat transport between heating element and vessel wall by convection and radiation**
- **GUNT software for data acquisition**

Under real conditions, the heat transport between two objects is normally substance-bound, i.e. convection and/or heat conduction, and not substance-bound, i.e. radiation, at the same time. Determining the individual heat quantities of one type of transfer is difficult.

The WL 377 trainer enables users to match the individual heat quantities to the corresponding type of transfer. The core element is a heated metal cylinder located at the centre of the pressure vessel. The surface temperature of the heated metal cylinder is regulated. Temperature sensors measure the surface temperature of the metal cylinder and the wall temperature of the pressure vessel. In addition to the heating power of the metal cylinder, it is possible to study the heat transport from the metal cylinder to the wall of the pressure vessel.

The pressure vessel can be put under vacuum or positive gauge pressure. In the vacuum, heat is transported primarily by radiation. If the vessel is filled with gas and is under positive gauge pressure, heat is also transferred by convection. It is possible to compare the heat transfer in different gases. In addition to air, nitrogen, helium, carbon dioxide or other gases are also suitable.

Heat transport by conduction is largely suppressed by adequately suspending the metal cylinder.

A rotary vane pump generates negative pressures down to approx. 0,02mbar. Positive gauge pressures up to approx. 1bar can be realised with compressed air. Two pressure sensors with suitable measuring ranges are available for the pressure measurement: a Pirani sensor measures the negative pressure while a piezo-resistive sensor measures the positive pressure.

The measured values can be read on digital displays. At the same time, the measured values can also be transmitted directly to a PC via USB, where they can be analysed with the GUNT software.

Learning objectives/experiments

- experiments in vacuum
  - heat transfer by radiation
  - determination of the radiation coefficient
- experiments at ambient pressure or positive gauge pressure
  - heat transfer by convection and radiation
  - determination of the heat quantity transferred by convection
  - determination of the heat transfer coefficient based on measured values
  - theoretical determination of the heat transfer coefficient based on the Nusselt number
  - comparison of the heat transfer in different gases

WL 377
Convection and radiation

1 temperature controller with temperature display, 2 temperature display, 3 power display, 4 vacuum pump, 5 pressure vessel, 6 vessel's absolute pressure display, 7 vessel's relative pressure display

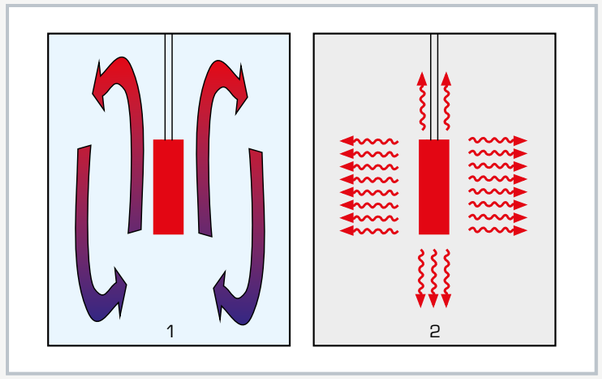

Heat transfer in the vessel:
1 convection (vessel filled with gas), 2 radiation (vessel filled with vacuum)

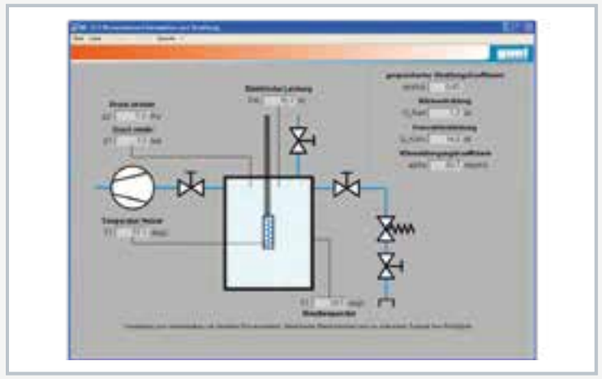

Software screenshot: process schematic

Specification

[1] heat transfer between heated metal cylinder and vessel wall by convection and radiation
[2] operation with various gases possible
[3] experiments in vacuum or at a slight positive gauge pressure
[4] electrically heated metal cylinder in the pressure vessel as experimental vessel
[5] temperature-controlled heating element
[6] vacuum generation with rotary vane pump
[7] instrumentation: 1 temperature sensor on the metal cylinder, 1 power sensor at the heating element, 1 Pirani pressure sensor, 1 piezo-resistive pressure sensor
[8] digital displays for temperature, pressure and heating power
[9] GUNT software for data acquisition via USB under Windows 7, 8.1, 10

Technical data

Heating element
- output: 20W
- radiation surface area: approx. 61cm^2

Pressure vessel
- pressure: -1...1,5bar
- volume: 11l

Pump for vacuum generation
- power consumption: 250W
- nominal suction capacity: 5m^3/h
- final pressure with gas ballast: 3*10^{-3}mbar
- final pressure without gas ballast: 3*10^{-3}mbar

Measuring ranges
- negative pressure: 0,5*10^{-3}...1000mbar
- pressure: -1...1,5bar rel.
- temperature: 0...250°C
- power: 0...23W

230V, 50Hz, 1 phase
230V, 60Hz, 1 phase; 120V, 60Hz, 1 phase
UL/CSA optional
LxWxH: 1340x790x1500mm
Weight: approx. 160kg

Required for operation

compressed air: min. 1,5bar
PC with Windows recommended

Scope of delivery

1 trainer
1 GUNT software CD + USB cable
1 set of instructional material

GUNT-Thermoline
Fundamentals of heat transfer

Overall didactic concept for targeted teaching on the fundamentals of heat transfer.

- accurate measurements
- software-controlled
- training software

WL 420
Heat conduction in metals

WL 430
Heat conduction and convection

WL 460
Heat transfer by radiation

WL 422
Heat conduction in fluids

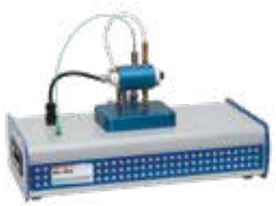

WL 440
Free and forced convection

Network capability

- full network access to ongoing experiments by any number of external workstations
- experiments can be independently followed and evaluated by students at all workstations when using a single training system

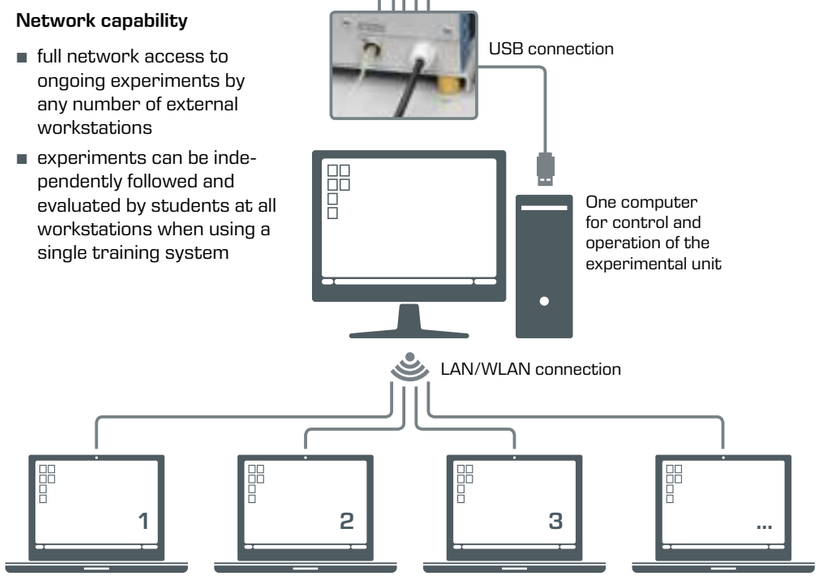

...any number of workstations with GUNT software with just a single licence

Operation and data acquisition

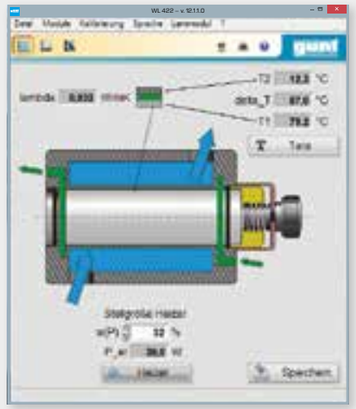

Operation

- simple operation of the system via the software
- adjust operating parameters via respective button icons
- check and read off measured values

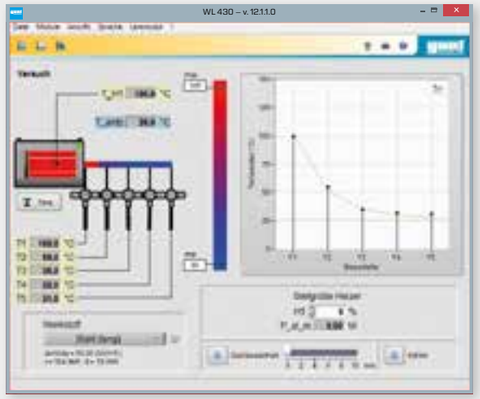

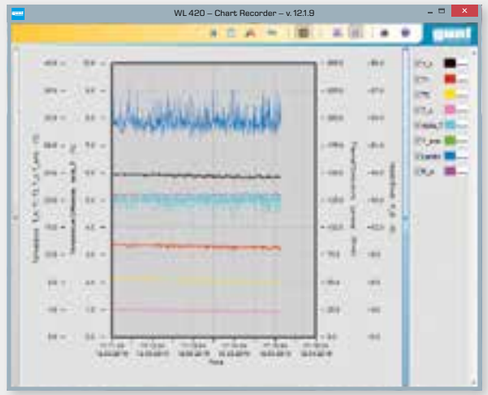

Time dependency

- representation of the measured values as a function of time
- plot and log your own characteristics
- freely selectable form of presentation of the measured values
  - measured values selection
  - resolution
  - colour
  - time intervals

Geometric temperature curve

- representations of the temperature curves make it easier to understand the respective heat transfer mechanisms

Training software

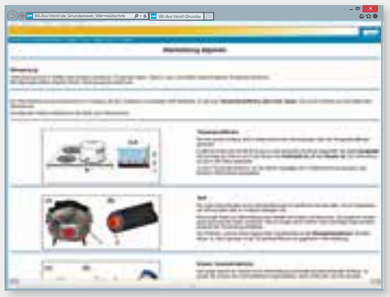

Course in the fundamentals
Educationally thought-out and media-rich learning content in the field of heat transfer

Detailed thematic courses

- the various forms of heat transfer are explained using concrete examples
- independent preparation for handling the equipment

Targeted review of the learning content

- allows learning progress to be checked discreetly and automatically
- detect weaknesses and provide targeted support

For further information, please refer also to the Thermoline-brochure.

WL 420
Heat conduction in metals

Description

- **effect of different metals on heat conduction**
- **functions of the GUNT software: educational software, data acquisition, system operation**
- **part of the GUNT-Thermoline: Fundamentals of Heat Transfer**

Heat conduction is one of the three basic forms of heat transfer. According to the second law of thermodynamics, heat is always transferred from the higher energy level to the low energy level. If the temperature of a body does not change despite continuous addition or removal of heat, this is known as steady-state heat conduction.

WL 420 offers basic experiments for targeted teaching on the topic of heat conduction through various metals. To this end, one of eleven samples is used. The upper region of the sample is heated by an electrical heater and the lower section cooled by a Peltier element. Heat conduction occurs through the respective sample from top to bottom. Two samples can be inserted into the experimental unit at the same time, in order to investigate thermal conductivity through multi-layered metals. Perfectly matched components ensure rapid heating and trouble-free measurements.

The temperature of the metal samples is taken on the top and bottom by means of thermocouples. The microprocessor-based instrumentation is well protected in the housing. The GUNT software consists of a software for system operation and for data acquisition and an educational software. With explanatory texts and illustrations the educational software significantly aids the understanding of the theoretical principles. The unit is connected to the PC via USB.

Learning objectives/experiments

- time dependency until the steady state is reached
- calculate the thermal conductivity λ of different metals
- calculate the thermal resistance of the sample
- heat transfer with different samples connected in series
- effect of sample length on heat transfer

WL 420
Heat conduction in metals

1 heater, 2 sample, 3 storage for samples, 4 thermocouple; Peltier element concealed

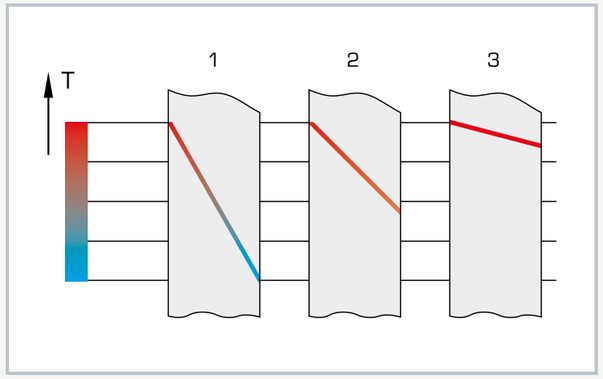

Heat conduction through different metals: 1 temperature profile in metal with low thermal conductivity, 2 temperature profile in metal with medium thermal conductivity, 3 temperature profile in metal with high thermal conductivity; T temperature; red: hot, blue: cold

User interface of the powerful GUNT software

Specification

[1] investigation of the thermal conductivity of different metals
[2] continuously adjustable heater
[3] Peltier element as cooler
[4] 11 samples made of 5 metals, different lengths
[5] display of temperatures and power consumption in the software
[6] microprocessor-based instrumentation
[7] functions of the GUNT software: educational software, data acquisition, system operation
[8] GUNT software for data acquisition via USB under Windows 7, 8.1, 10

Technical data

Peltier element
- cooling capacity 56,6W

Heater
- heating power 30W
- temperature limitation: 150°C

Samples Ø 20mm
Length between measuring points
- 5x 20mm (copper, steel, stainless steel, brass, aluminium)
- 5x 40mm (copper, steel, stainless steel, brass, aluminium)
- 1x 40mm with turned groove (aluminium)

Measuring ranges
- temperature: 4x 0...325°C
- heating power: 0...50W

230V, 50Hz, 1 phase
230V, 60Hz, 1 phase; 120V, 60Hz, 1 phase
UL/CSA optional
LxWxH: 670x350x480mm
Weight: approx. 18kg

Required for operation

PC with Windows

Scope of delivery

1 experimental unit
11 metal samples
1 CD with authoring system for GUNT educational software
1 GUNT software CD + USB cable
1 set of instructional material

WL 422
Heat conduction in fluids

Description

- **effect of different fluids on heat conduction**
- **functions of the GUNT software: educational software, data acquisition, system operation**
- **part of the GUNT-Thermoline: Fundamentals of Heat Transfer**

Heat conduction is one of the three basic forms of heat transfer. According to the second law of thermodynamics, heat is always transferred from the higher energy level to the low energy level.

WL 422 offers basic experiments for targeted teaching on the topic of heat conduction in fluids. Such teaching should discuss the fundamental differences between gases and liquids.

Two cylinders form the main component of the experimental unit: an electrically heated inner cylinder situated in a water-cooled outer cylinder. There is a concentric annular gap between the two cylinders. This annular gap is filled with the fluid being studied. The heat conduction occurs from the inner cylinder, through the fluid to the outer cylinder.

The narrow annular gap prevents the formation of a convective heat flux and allows a relatively large pass-through area while at the same time providing a homogeneous temperature distribution.

The experimental unit is equipped with temperature sensors inside and outside of the annular gap. Thermal conductivities for different fluids, e.g. water, oil, air or carbon dioxide can be determined in experiments.

The microprocessor-based instrumentation is well protected in the housing. The GUNT software consists of a software for system operation and for data acquisition and an educational software. With explanatory texts and illustrations the educational software significantly aids the understanding of the theoretical principles. The unit is connected to the PC via USB.

Learning objectives/experiments

- steady heat conduction in gases and liquids:
  - determine the thermal resistance of fluids
  - determination of thermal conductivities k for different fluids at different temperatures
- transient heat conduction in fluids:
  - interpret transient states during heating and cooling
  - introduction to transient heat conduction with the block capacity model

WL 422
Heat conduction in fluids

1 temperature sensor, 2 connection for fluid to be examined, 3 inner cylinder, 4 valve for cooling water, 5 outer cylinder, 6 cooling water hose

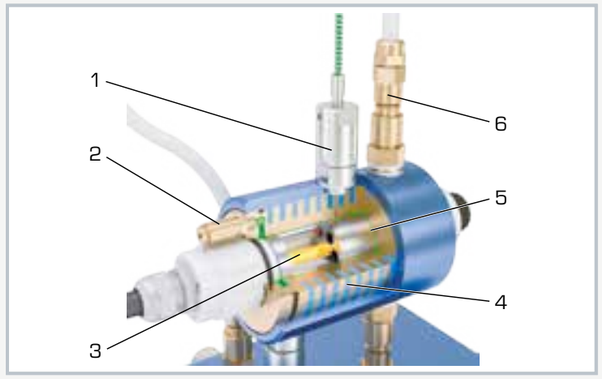

Cross-sectional view of the experimental setup: 1 temperature sensor, 2 connection for fluid, 3 inner cylinder, 4 cooling channel, 5 annular gap, 6 cooling water connection; blue: cooling water, green: fluid

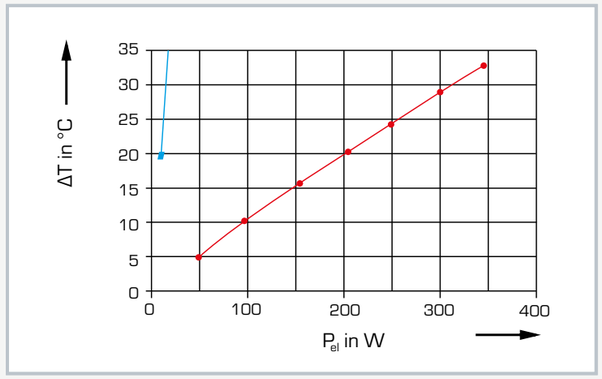

Differences in calculated values for water and air
ΔT temperature difference, P_{el} Electrical power; blue: air, red: water

Specification

[1] investigation of the thermal conductivity of common fluids, e.g. water, oil, air or carbon dioxide
[2] concentric annular gap between 2 cylinders containing the fluid being studied
[3] inner cylinder, continuously electrically heated
[4] water-cooled outer cylinder
[5] display of temperatures and heating power in the display
[6] microprocessor-based instrumentation
[7] functions of the GUNT software: educational software, data acquisition, system operation
[8] GUNT software for data acquisition via USB under Windows 7, 8.1, 10

Technical data

Heater
- heating power: 350W
- temperature limitation: 95°C

Heat transfer area: 0,007439m^2

Annular gap
- height: 0,4mm
- average diameter: 29,6mm

Inner cylinder
- mass: 0,11kg
- specific heat capacity: 890J/kg*K

Measuring ranges
- temperature: 2x 0...325°C
- heating power: 0...450W

230V, 50Hz, 1 phase
230V, 60Hz, 1 phase; 120V, 60Hz, 1 phase
UL/CSA optional
LxWxH: 670x350x480mm
Weight: approx. 18kg

Required for operation

cold water connection max. 30°C, min. 1L/h
drain
PC with Windows

Scope of delivery

1 experimental unit
1 set of hoses
1 set of hoses with quick-release couplings
1 CD with authoring system for GUNT educational software
1 GUNT software CD + USB cable
1 set of instructional material

WL 430
Heat conduction and convection

Description

- **effect of heat conduction and convection on heat transfer**
- **experiments with still air on free convection**
- **functions of the GUNT software: educational software, data acquisition, system operation**
- **part of the GUNT-Thermoline: Fundamentals of Heat Transfer**

Heat conduction and convection are among the three basic forms of heat transfer and often occur together.

WL 430 allows basic experiments on both forms of heat transfer: heat conduction and convection.

At the heart of the unit are different metal samples. The samples are placed on a heater and are heated on one side. The heat is conducted through the sample and dissipated to the environment. The sample used behaves like a cooling fin. In addition there are fans below the sample. The flow rate of the fans is continuously adjustable in order to influence the convective heat transfer. The air flow is conveyed evenly around the sample. Consequently, besides conducting the experiment with still air (free convection), it is also possible to conduct experiments with flowing air (forced convection).

The effect of different materials on heat conduction is demonstrated by comparing different samples.

The experimental unit is equipped with five temperature sensors. Heating power and flow velocity of the air flow are adjusted and displayed via the software.

The microprocessor-based instrumentation is well protected in the housing. The GUNT software consists of a software for system operation and for data acquisition and an educational software. With explanatory texts and illustrations the educational software significantly aids the understanding of the theoretical principles. The unit is connected to the PC via USB.

Learning objectives/experiments

- effect of heat conduction and convection on heat transfer
- effect of free and forced convection on heat transfer
- calculate convective heat transfers
- effect of different materials on heat conduction
- effect of sample length on heat transfer

WL 430
Heat conduction and convection

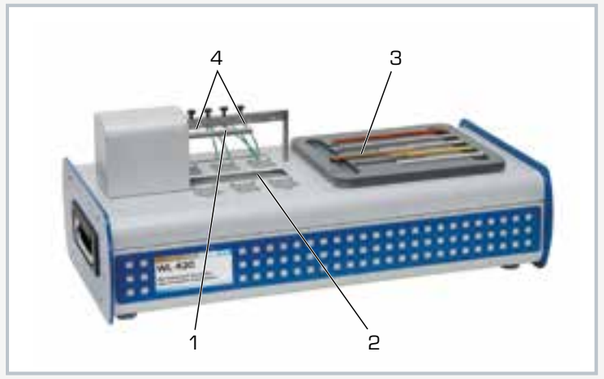

1 sample, 2 air vent, 3 storage for samples, 4 thermocouple

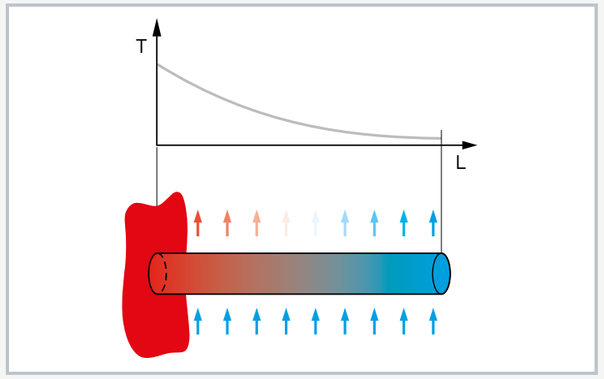

Temperature profile along a sample: red: hot, blue: cold; T temperature, L length of the sample; arrows: air flow

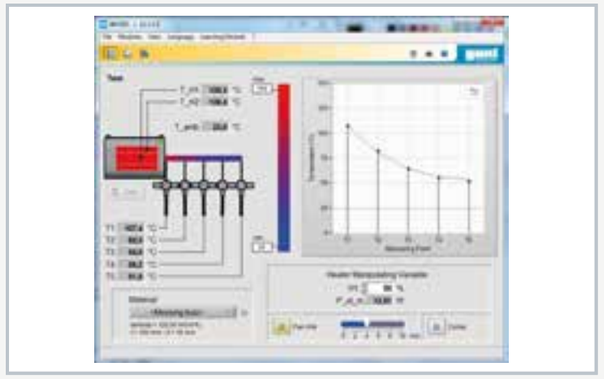

User interface of the powerful GUNT software

Specification

[1] investigate heat conduction and convection using the example of a cooling fin
[2] cooling fin: sample heated at one end, made of metal
[3] 6 samples made of different materials and with different lengths
[4] 6 fans for experiments with forced convection
[5] continuously adjustable heating power and fan power
[6] display of temperatures, heating power and air velocity in the software
[7] microprocessor-based instrumentation
[8] functions of the GUNT software: educational software, data acquisition, system operation
[9] GUNT software for data acquisition via USB under Windows 7, 8.1, 10

Technical data

Heater
- heating power 30W
- temperature limitation: 160°C

6x fan
- max. flow rate: $40m^3/h$
- nominal speed: $14400min^{-1}$
- power consumption: 7,9W

4x samples, short
- length dissipating heat: 104mm
- heat transfer area: $32,6cm^2$
- copper, aluminium, brass, steel

2x samples, long
- length dissipating heat: 154mm
- heat transfer area: $48,4cm^2$
- copper, steel

Measuring ranges
- flow velocity: 0...10m/s
- temperature: 8x 0...325°C
- heating power: 0...30W

230V, 50Hz, 1 phase
230V, 60Hz, 1 phase; 120V, 60Hz, 1 phase
UL/CSA optional
LxWxH: 670x350x280mm
Weight: approx. ca. 17kg

Required for operation

PC with Windows

Scope of delivery

1 experimental unit
7 metal samples
1 CD with authoring system for GUNT educational software
1 GUNT software CD + USB cable
1 set of instructional material

WL 440
Free and forced convection

Learning objectives/experiments

- free and forced convection
- calculation of convective heat transfer at different geometries
  - flat plate
  - cylinder
  - tube bundle
- experimental determination of the Nusselt number
- calculation of typical characteristic variables of heat transfer
  - Nusselt number
  - Reynolds number
- investigation of the relationship between flow formation and heat transfer during experiments
- description of transient heating process

Description

- **free and forced convection using the example of various heating elements**
- **functions of the GUNT software: educational software, data acquisition, system operation**
- **part of the GUNT-Thermoline: Fundamentals of Heat Transfer**

Convection is one of the three basic forms of heat transfer. Material-bound heat transport takes place. During convection the fluid is in motion.

The WL 440 offers basic experiments for targeted teaching on the topic of free and forced convection on various heating elements.

At the heart of the experimental unit is a vertical air duct into which various heating elements are inserted.

An axial fan is located on top of the air duct. The fan draws in ambient air and guides it through the air duct. The air flows past a heating element and absorbs heat. Four heating elements with different geometries are available to be selected. In order to investigate free convection, two of the four heating elements can be operated outside of the air duct. The heating elements are designed in such a way to release heat only at their surface. The compact design ensures rapid heating and a short time for experiments.

The experimental unit is equipped with temperature sensors at the inlet and outlet of the air duct. The air velocity is measured to determine the air flow rate. Heating power and flow rate are adjusted and displayed via the software.

The microprocessor-based instrumentation is well protected in the housing. The GUNT software consists of a software for system operation and for data acquisition and an educational software. With explanatory texts and illustrations the educational software significantly aids the understanding of the theoretical principles. The unit is connected to the PC via USB.

WL 440
Free and forced convection

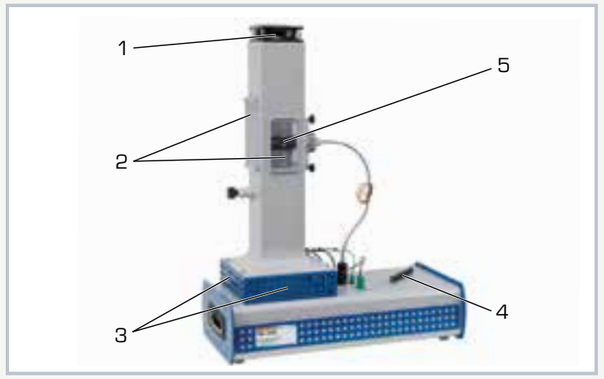

1 fan, 2 sight window, 3 air inlet, 4 hand-held meter for temperature, 5 heating element

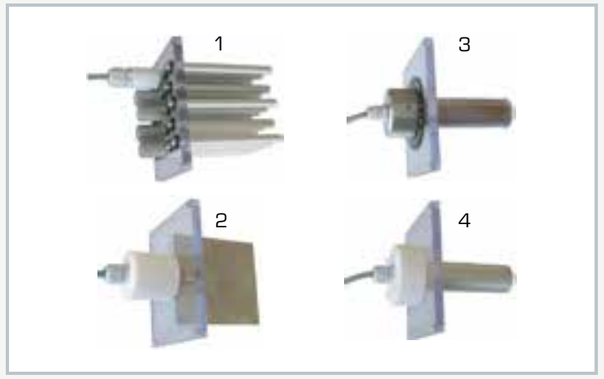

Various interchangeable heating elements: 1 tube bundle, 2 plane plate, 3 cylinder with heating foil to examine the local heat transfer, 4 cylinder with an even temperature at the surface

User interface of the powerful GUNT software

Specification

[1] investigate heat transfer in the air duct by forced convection
[2] study of free convection
[3] air duct with axial fan
[4] 4 heating elements with different geometries
[5] continuously adjustable heating power and fan power
[6] display of temperatures, heating power and air velocity in the software
[7] microprocessor-based instrumentation
[8] functions of the GUNT software: educational software, data acquisition, system operation
[9] GUNT software for data acquisition via USB under Windows 7, 8.1, 10

Technical data

Air duct
- flow cross-section: 120x120mm
- height: approx. 0,6m

Heating elements, temperature limitation: 90°C
- tube bundle
  - number of tubes: 23
  - one tube in variable postion is heated
  - heating power: 20W
  - heat transfer area: 0,001m^2
- cylinder with an even temperature at the surface
  - heating power: 20W
  - heat transfer area: 0,0112m^2
- plate
  - heating power: 40W
  - heat transfer area: 2x 0,01m^2
- cylinder with heating foil to investigate the local heat transfer
  - heating power: 40W
  - heat transfer area: 0,0112m^2

Axial fan
- max. flow rate: 500m^3/h
- max. pressure difference: approx. 950Pa
- power consumption: 90W

Measuring ranges
- air velocity: 0...10m/s
- temperature: 4x 0...325°C
- heating power: 0...50W

230V, 50Hz, 1 phase
230V, 60Hz, 1 phase; 120V, 60Hz, 1 phase
UL/CSA optional
LxWxH: 670x350x880mm; Weight: approx. 25kg

Required for operation

PC with Windows

Scope of delivery

1 experimental unit
1 GUNT software CD + USB cable
1 set of instructional material

WL 460
Heat transfer by radiation

Description

- **effect of different surfaces on heat transfer by radiation**
- **functions of the GUNT software: educational software, data acquisition, system operation**
- **part of the GUNT-Thermoline: Fundamentals of Heat Transfer**

Heat radiation is one of the three basic forms of heat transfer. In radiation the heat transfer takes place via electromagnetic waves. Unlike heat conduction and convection, heat radiation can also propagate in a vacuum. Heat radiation is not bound to a material.

WL 460 offers basic experiments for targeted teaching on the topic of heat transfer by radiation. At the heart of the experimental unit is a metallic sample heated by a concentrated light beam. The light beam is generated by a continuously adjustable halogen lamp and a parabolic reflector. The reflector concentrates the radiation to a focal point. A sample is placed on a thermocouple located at the focal point. The thermal radiation emitted by the sample is measured by a thermopile. In order to be able to measure the radiation at different distances, the thermopile is mounted on a moveable carriage.

Samples with different surfaces are available to be selected. Perfectly matched components ensure rapid heating and trouble-free measurements.

The microprocessor-based instrumentation is well protected in the housing. The GUNT software consists of a software for system operation and for data acquisition and an educational software. With explanatory texts and illustrations the educational software significantly aids the understanding of the theoretical principles. The unit is connected to the PC via USB.

Learning objectives/experiments

- verify Lambert's inverse-square law
- verify Stefan-Boltzmann law
- verify Kirchhoff's law
- study transient behaviour
- create power balances
- produce logarithmic diagrams for evaluations

WL 460
Heat transfer by radiation

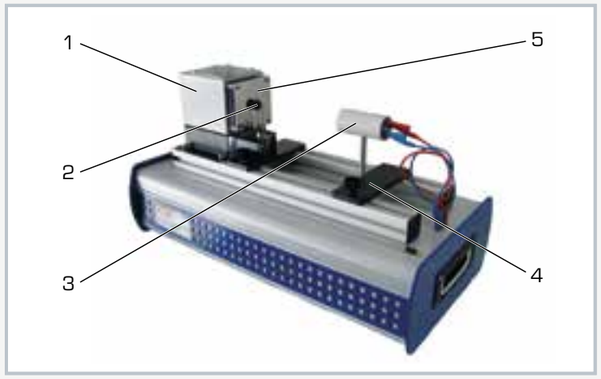

1 lamp housing, 2 sample placed on thermocouple, 3 thermopile, 4 movable carriage, 5 orifice plate

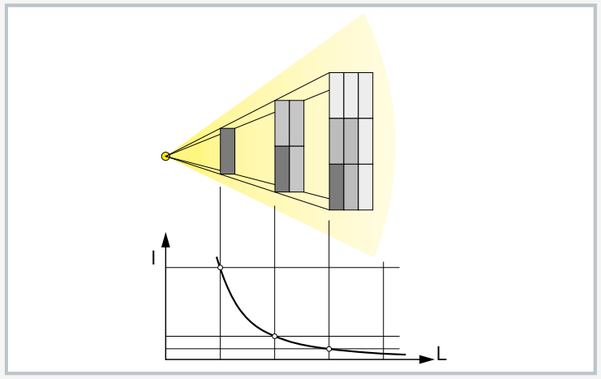

Radiation intensity with point-based radiation source: I intensity of the radiation, L distance to the radiation source (Lambert's inverse-square law)

User interface of the powerful GUNT software

Specification

[1] investigation of heat radiation on different surfaces heated by a concentrated beam of light
[2] generation of the concentrated beam of light with a continuously adjustable halogen lamp and a parabolic reflector
[3] 6 different metallic samples
[4] thermopile on a movable carriage for measuring the heat radiation
[5] display of temperature and radiation intensity in the software
[6] microprocessor-based instrumentation
[7] functions of the GUNT software: educational software, data acquisition, system operation
[8] GUNT software for data acquisition via USB under Windows 7, 8.1, 10

Technical data

Halogen lamp
- electrical power 150W
- max. temperarature: approx. 560°C

Aluminium samples, Ø 20mm
- 1x matt anodized on both sides
- 1x painted on both sides (high-temperature paint)
- 1x matt anodized with one painted side

Copper samples, Ø 20mm
- 1x nickel-plated
- 1x heavily oxidized

Steel sample, Ø 20mm
- 1x heavily oxidized

Measuring ranges
- temperature: 0...780°C
- radiation intensity: 0...1250W/m^2

230V, 50Hz, 1 phase
230V, 60Hz, 1 phase; 120V, 60Hz, 1 phase
UL/CSA optional
LxWxH:LxBxH: 670x350x370mm
Weight: approx. 18kg

Required for operation

PC with Windows

Scope of delivery

1 experimental unit
6 different metal samples
1 CD with authoring system for GUNT educational software
1 GUNT software CD + USB cable
1 set of instructional material

WL 900
Steady-state and non-steady-state heat conduction

Learning objectives/experiments

- steady heat conduction
- transient heat conduction
- temperature/time profiles
- calculate thermal conductivity λ of different metals

Description

- **steady and transient heat conduction in metals**
- **12 temperature measurement points in every sample**
- **regulated temperature of the heat source**

Heat conduction is the transport of heat between the individual molecules in solid, liquid and gaseous media under the influence of a temperature difference.
Steady heat conduction is the term used when heat transport is maintained permanently and uniformly by adding heat.
In transient heat conduction, the temperature distribution in the body is dependent on location and time.

Thermal conductivity λ is a temperature-dependent property of a material that indicates how well the heat propagates from a point in the material.

WL 900 can be used to study both steady and transient heat conduction. The trainer consists of a heat source and a heat sink, between which cylindrical samples made of different metals are inserted. Each sample is fitted with 12 temperature measurement points. The temperature measurement points are designed to has as little influence on the temperature as possible and the core temperature of the sample is measured.

The heat source consists of an electrically heated hot water circuit. An electronic controller ensures the heating water is kept at a constant temperature. The heat sink is realised by means of a water cooling system. An elevated tank ensures a constant cooling water flow rate.

A temperature jump can be generated by appropriate regulation of the cooling water flow. A PC can be used to display the transient temperature distribution in the sample over time and place.

The temperatures of the sample, heating and cooling water, as well as the electrical heating power and the cooling water flow rate are displayed digitally on the switch cabinet and can be transmitted simultaneously via USB directly to a PC where they can be analysed using the software included. The thermal conductivity λ can be calculated from the measured data.

WL 900
Steady-state and non-steady-state heat conduction

1 elevated tank for constant cooling water initial pressure, 2 heat source with heater, 3 sample, 4 water-cooled heat sink, 5 displays and controls

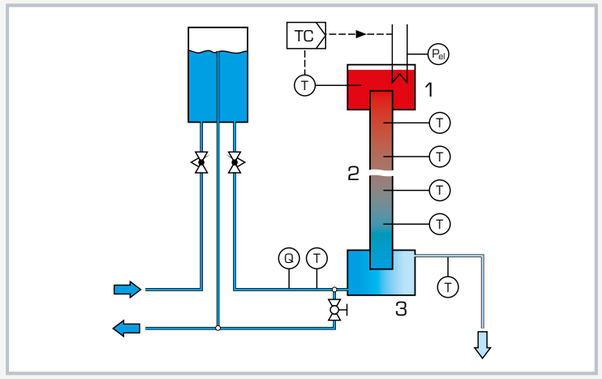

1 heater, 2 sample, 3 heat sink; T temperature, Q flow rate, TC heating water temperature controller, P_{el} electric heating power, blue cooling water, red heating water

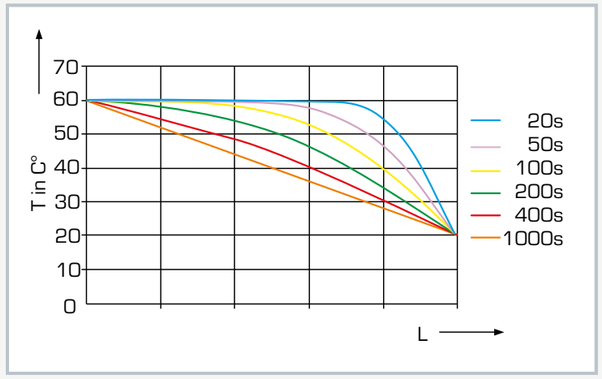

Transient temperature profile along a rod with sudden cooling
T temperature, L length of the rod, coloured lines: temperature profile at different points in time

Specification

[1] investigation of steady and transient heat conduction in metals
[2] determining the thermal conductivity λ
[3] heating water circuit as heat source, electronically regulated
[4] electric heater with PID controller
[5] elevated tank with overflow for generating a constant cooling water flow rate
[6] samples made of 5 different metals
[7] cooling water temperature and flow rate measurement
[8] digital displays: electric heating power, temperatures, cooling water flow rate
[9] GUNT software for data acquisition via USB under Windows 7, 8.1, 10

Technical data

Heater
- output: 800W
- temperature: 20...85°C

Samples, Ø 40mm
- 3x 450mm (copper, aluminium, brass)
- 2x 300mm (steel, stainless steel)

Heating tank: ca. 2L
Cooling tank: ca. 0,5L
Elevated tank: ca. 6L

Temperature sensors
- 12x thermocouple type K, along the sample
- 2x Pt100, in the cooling water
- 1x Pt100, in the heating water

Measuring ranges
- temperature: 14x 0...100°C
- power: 0...1000W
- flow rate: 0,1...2,5L/min

230V, 50Hz, 1 phase
230V, 60Hz, 1 phase, 120V, 60Hz, 1 phase
UL/CSA optional
LxWxH: 1240x800x1670mm
Weight: approx. 150kg

Required for operation

water connection, drain
PC with Windows recommended

Scope of delivery

1 trainer
1 set of accessories
1 set of instructional material

Basic knowledge

Phase transition

Phase transition

A gaseous, liquid or solid state in a homogeneous system of substances is called a phase. The phase depends on the thermodynamic state variables pressure **p** and temperature **T**.

The conversion from one phase to another is called a phase transition:

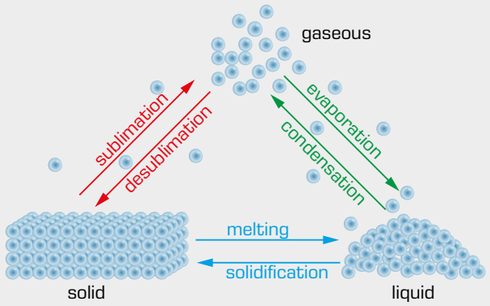

Above the critical point 3 the gaseous and liquid phases of some systems of substances, e. g. water, cannot be differentiated anymore. The physical properties of the fluid lie somewhere between the two phases: The density corresponds to the density of the liquid phase, the viscosity to that of the gaseous phase. This phase is known as the "supercritical" phase. In this phase, the fluid can neither evaporate nor condense.

Another particularity in some systems of substances, such as water, is known as the triple point 1. At this point the solid, liquid and gaseous phase are in equilibrium. All six phase changes occur simultaenously.

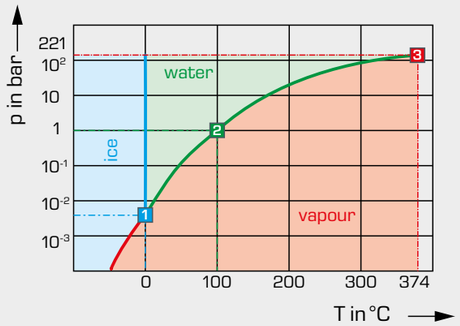

Temperature-pressure diagram of water

1 triple point, **2** boiling point, **3** critical point;
sublimation curve,
boiling point curve,
melting point curve

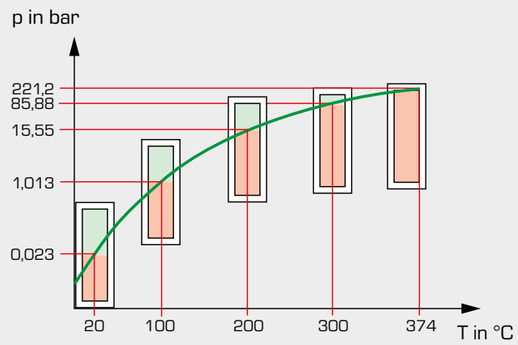

Closed system along the vapour pressure curve of water

vaporisation curve,
water,
vapour;
p pressure, **T** temperature

In a closed system filled with liquid, a thermodynamic equilibration sets in between the liquid and its vaporised phase. This state is called the saturation state. The prevailing pressure is referred to as vapour pressure, in case of water steam pressure or saturated steam pressure, and the temperature is known as saturation temperature. The vapour pressure curve can be derived from both. This curve is shown in the phase diagram of water.

Evaporation process

Steam is used for a variety of processes in engineering. The most common applications are heating processes as well as steam turbines in power plants.

Typical applications of steam in processes include:

- heating: e.g. shell-and-tube heat exchangers to heat up a product
- propulsion: e.g. steam turbines, steam engines
- propellant: e.g. steam ejectors to separate process gases
- atomization: steam for the mechanical separation of fluids, e.g. in gas flares, to reduce soot particles in the exhaust gas
- cleaning: steam cleaners to loosen dirt
- product moistening: paper production
- air humidification: steam humidifiers in air ducts

We distinguish between ideal gas, real gas and vapour. In an ideal gas, pressure and volume are exactly inversely proportional, in a real gas only by approximation. In vapours, the pressure changes only slightly with the volume, depending on the degree of saturation.

Steam occurs in various forms:

Wet steam: Liquid and gaseous state of the water molecules in a system, some water molecules have released their evaporation heat and condense into fine water droplets.

Saturated steam: Boundary area between wet steam and hot steam, state in which the last drop of water changes from liquid to gaseous. The addition of further heat beyond the boiling point produces hot steam or superheated steam.

Hot steam: A distinction is made between **superheated steam** and **supercritical steam.**

Superheated steam: Steam with a temperature above the boiling temperature, purely gaseous state of the water molecules. Real gas is present.

Supercritical steam: Phase at temperatures above the critical point

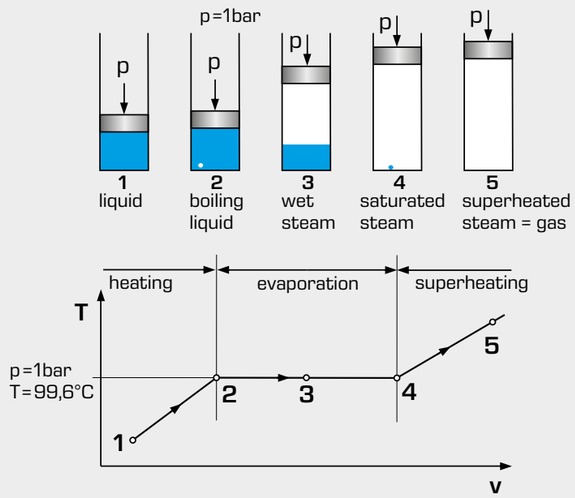

Evaporation of water: change of state when heating water under constant pressure **p** = 1 bar

T temperature,
v specific volume;
1 liquid,
2 boiling liquid,
3 unsaturated (wet) steam,
4 saturated steam,
5 superheated steam (gas)

WL 210
Evaporation process

Learning objectives/experiments

- observation of typical forms of evaporation
  - single phase liquid flow
  - sub-cooled boiling
  - slug flow
  - annular flow
  - film boiling
  - dispersed flow
  - single phase vapour flow
  - wet steam
- effect on the evaporation process by
  - flow rate
  - temperature
  - pressure

Description

- **demonstration of evaporation in a double-wall pipe evaporator made of glass**
- **operation with harmless, special low boiling point liquid**

During the generation of vapour, the medium that is to evaporate runs through different flow forms dependent on the heat transfer area. The medium flows into a tube evaporator as a fluid and exits the tube evaporator as superheated vapour.

In practice, the water vapour generated in big systems is used e.g. for heating plants or machine drives. To design steam generators, it is important to have knowledge of the evaporation process with the boiling crises in order to ensure reliable operation. Boiling crises are caused by a sudden deterioration of the heat transfer, whereby the high heat flux density leads to a dangerous increase in the wall temperature.

The WL 210 experimental unit can be used to examine and visualise the evaporation process in its various flow forms. This is done by heating evaporating liquid, Solkatherm SES36, in a tube evaporator made of glass.

Compared with water, this liquid has the advantage that its boiling point is at 36,7°C (1013hPa), whereby the entire evaporation process takes place at much lower temperatures and a lower heating power. The pressure can be varied via the cooling circuit. A water jet pump evacurates the evaporation circuit.

WL 210
Evaporation process

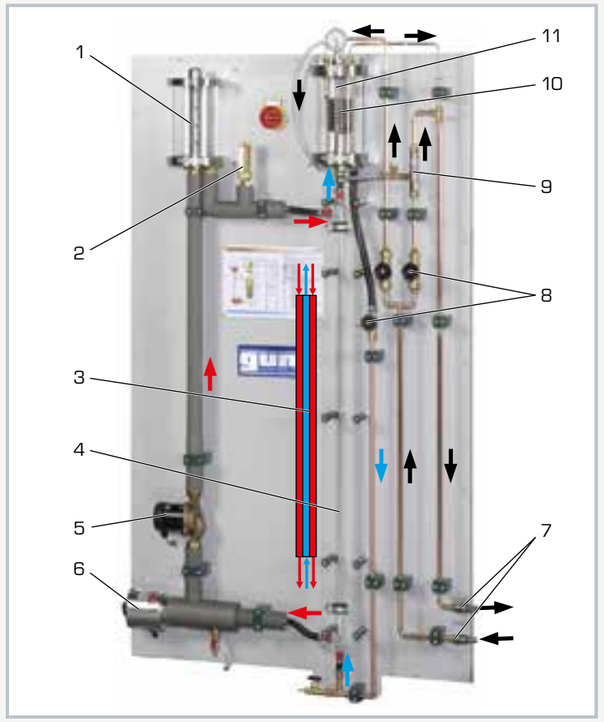

1 heating circuit tank, 2 thermometer, 3 tube evaporator, schematic drawing, 4 tube evaporator, 5 pump, 6 heater, 7 cooling water connection, 8 valves, 9 water jet pump, 10 tube coil, 11 collector with manometer and safety valve; red: heating circuit, blue: evaporation circuit, black: cooling circuit

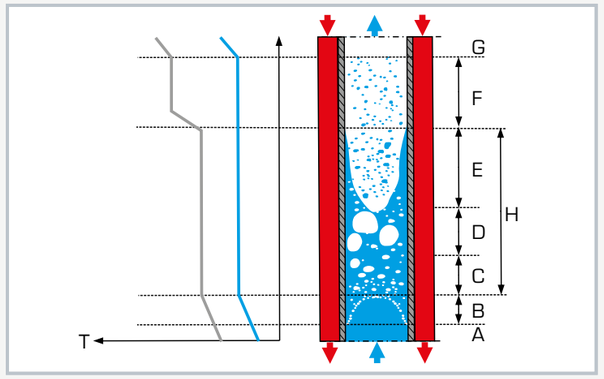

Evaporation in a tube evaporator:
A subcooled fluid, B initial boiling point, C bubbly flow, D slug flow, E annular flow, F dispersed flow, G superheated vapour, H boiling range; blue: fluid temperature, grey: heating surface temperature

Specification

[1] visualisation of evaporation in a tube evaporator
[2] heating and cooling medium: water
[3] tube evaporator made of double-wall glass
[4] heating circuit with heater, pump and expansion vessel
[5] safety valve protects against overpressure in the system
[6] water jet pump to evacurate the evaporation circuit generate negative pressure (vacuum)
[7] evaporation circuit with CFC-free evaporating liquid Solkatherm SES36

Technical data

Heater
- power rating: 2kW
- temperature range: 5...80°C

Heating and cooling medium: water

Pump
- 3 stages
- max. flow rate: 1,9m^3/h
- max. head: 1,5m
- power consumption: 58W

Tube evaporator
- length: 1050mm
- inner diameter: 16mm
- outer diameter: 24mm

Condenser: coiled tube made of copper

Measuring ranges
- pressure: -1...1,5bar relativ
- temperature: 0...100°C

230V, 50Hz, 1 phase
230V, 60Hz, 1 phase
120V, 60Hz, 1 phase
UL/CSA optional
LxWxH: 1250x790x1970mm
Weight: approx. 170kg

Required for operation

water connection: 500mbar, min. 320L/h, drain

Scope of delivery

1 trainer
1 kg refrigerant Solkatherm SES36
1 set of hoses
1 set of instructional material

WL 220
Boiling process

Description

- **visualisation of boiling and evaporation**
- **software for data acquisition**

Heating a liquid over a heating surface produces different modes of boiling dependent on the heat flux density. They can accelerate the evaporation process (nucleate boiling) or impair it (film boiling). In practice, a limitation of the heat flux density must be assured in order to prevent damage to the heating surface. This knowledge is applied in practice e.g. when designing steam boilers for steam-powered drives.

The WL 220 experimental unit can be used to demonstrate boiling and evaporation processes in a straightforward manner. The processes take place in a transparent tank. A condenser in the form of a water-cooled tube coil ensures a closed circuit within the tank. Solkatherm SES36 is used as evaporating liquid. Compared with water, this liquid has the advantage that its boiling point is at 36,7°C (1013hPa), whereby the evaporation process takes place at much lower temperatures and a lower heating power.

Sensors record the flow rate of the cooling water, the heating power, pressure and temperatures at all relevant points. The measured values can be read on digital displays. At the same time, the measured values can also be transmitted directly to a PC via USB. The data acquisition software is included.

Learning objectives/experiments

- visualisation of different forms of evaporation
  - free convection boiling
  - nucleate boiling
  - film boiling
- heat transfer
- effect of temperature and pressure on the evaporation process

WL 220
Boiling process

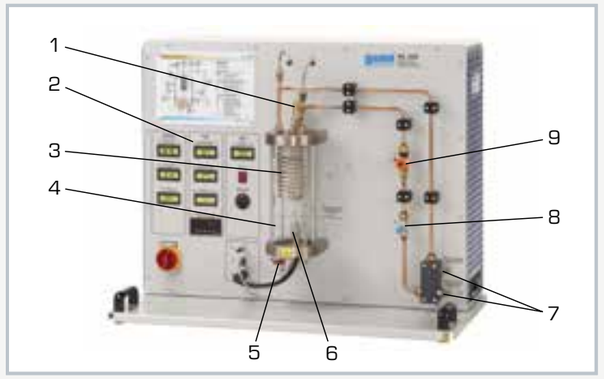

1 safety valve, 2 displays for temperature, flow rate and pressure, 3 condenser, 4 pressure vessel, 5 drain valve for the evaporating liquid, 6 heater, 7 cooling water connection, 8 valve for adjusting the cooling water, 9 cooling water flow rate sensor

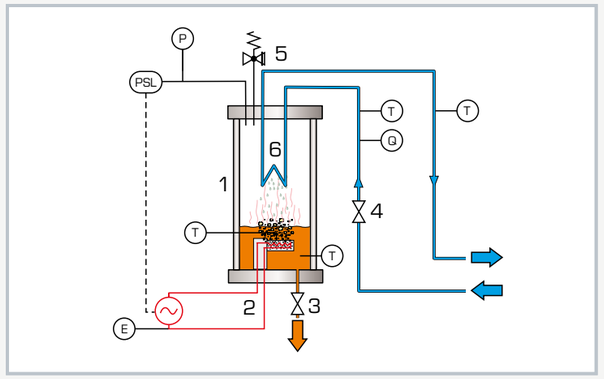

1 pressure vessel, 2 heater, 3 drain valve, 4 cooling water valve, 5 safety valve, 6 condenser; orange: evaporating liquid, red: heater, blue: cooling circuit; PSL pressure switch, E output, T temperature, Q flow rate, P pressure

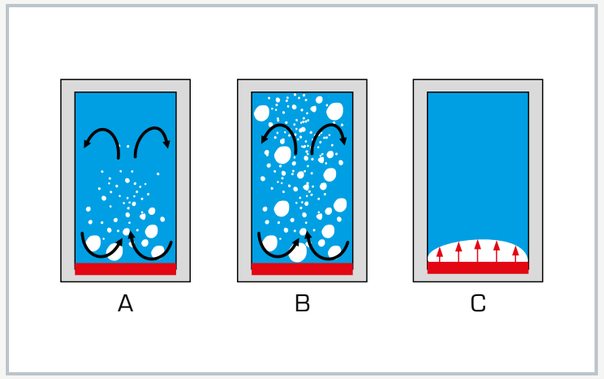

Different modes of boiling: A free convection boiling, B nucleate boiling, C film boiling; red: heater, blue: evaporating liquid, white: steam, black: convection flow

Specification

[1] visualisation of boiling and evaporation in a transparent pressure vessel
[2] evaporation with heating element
[3] condensation with tube coil
[4] safety valve protects against overpressure in the system
[5] pressure switch for additional protection of the pressure vessel, adjustable
[6] sensors for pressure, flow rate and temperature with digital display
[7] GUNT software for data acquisition via USB under Windows 7, 8.1, 10
[8] CFC-free evaporating liquid Solkatherm SES36

Technical data

Heater
- power: 250W, continuously adjustable

Safety valve: 2bar rel.
Pressure vessel: 2850mL
Condenser: coiled tube made of copper

Measuring ranges
- tank pressure: 0...4bar abs.
- power of heater: 0...300W
- flow rate (cooling water): 0,05...1,8L/min
- temperature: 4x 0...100°C

230V, 50Hz, 1 phase
230V, 60Hz, 1 phase
120V, 60Hz, 1 phase
UL/CSA optional
LxWxH: 1000x550x800mm
Weight: approx. 65kg

Required for operation

water connection, drain
PC with Windows recommended

Scope of delivery

1 experimental unit
2 kg refrigerant Solkatherm SES36
1 GUNT software CD + USB cable
1 set of hoses
1 set of instructional material

WL 204
Vapour pressure of water - Marcet boiler

Learning objectives/experiments

- recording the vapour pressure curve of water
- presentation of the relationship between pressure and temperature in a closed system
- temperature and pressure measurement

Description

- **recording the vapour pressure curve of water**
- **saturation pressure of water vapour as a function of the temperature**

In a closed system filled with fluid, a thermodynamic equilibrium sets in between the fluid and its vaporised phase. The prevailing pressure is called vapour pressure. It is substance-specific and temperature-dependent.

When a fluid is heated in a closed tank, the pressure increases as the temperature rises. Theoretically, the pressure increase is possible up to the critical point at which the densities of the fluid and gaseous phases are equal. Fluid and vapour are then no longer distinguishable from each other. This knowledge is applied in practice in process technology for freeze drying or pressure cooking.

The WL 204 experimental unit can be used to demonstrate the relationship between the pressure and temperature of water in a straightforward manner. Temperatures of up to 200°C are possible for recording the vapour pressure curve. The temperature and pressure can be continuously monitored via a digital temperature display and a Bourdon tube pressure gauge.

A temperature limiter and pressure relief valve are fitted as safety devices and protect the system against overpressure.

WL 204
Vapour pressure of water - Marcet boiler

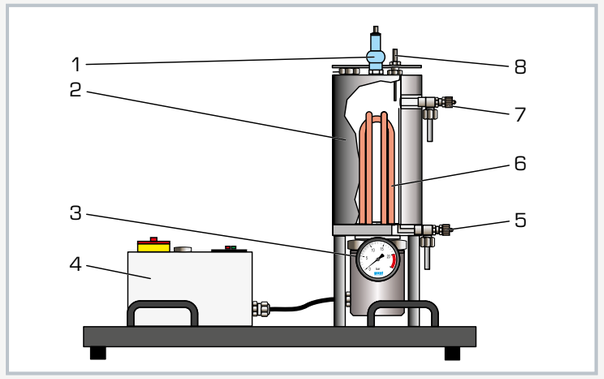

1 safety valve, 2 pressure boiler with insulating jacket, 3 Bourdon tube pressure gauge, 4 switch cabinet with temperature display, 5 drain valve, 6 heater, 7 overflow, 8 temperature sensor

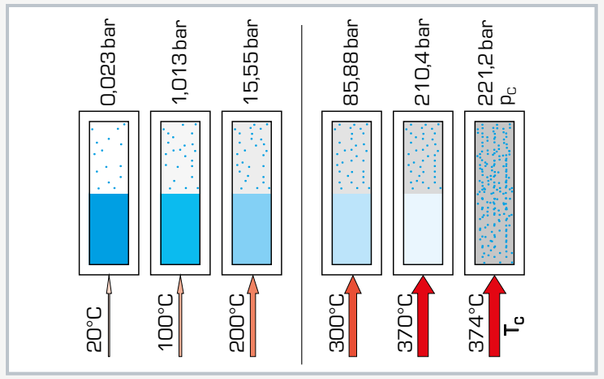

Heating up water in a closed tank: the pressure and temperature increase proportionally up to the critical point, at which fluid and vapour are no longer distinguishable from each other; critical point at T_c=374°C, p_c=221bar, dotted line: temperature limit of the experimental unit

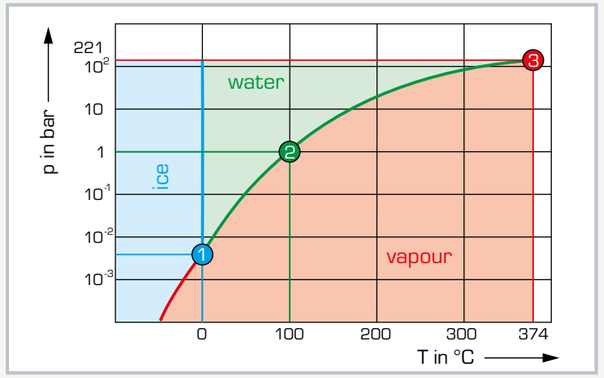

Temperature-pressure diagram of water
red: sublimation curve, green: boiling point curve, blue: melting point curve; 1 triple point, 2 boiling point, 3 critical point

Specification

[1] measuring a vapour pressure curve for saturated vapour
[2] pressure boiler with insulating jacket
[3] temperature limiter and safety valve protect against overpressure in the system
[4] Bourdon tube pressure gauge to indicate pressure
[5] digital temperature display

Technical data

Bourdon tube pressure gauge: -1...24bar
Temperature limiter: 200°C
Safety valve: 20bar
Heater: 2kW
Boiler, stainless steel: 2L

Measuring ranges
- temperature: 0...200°C
- pressure: 0...20bar

230V, 50Hz, 1 phase
230V, 60Hz, 1 phase
120V, 60Hz, 1 phase
UL/CSA optional
LxWxH: 600x400x680mm
Weight: approx. 35kg

Scope of delivery

1 experimental unit
1 funnel
1 set of tools
1 set of instructional material

WL 230
Condensation process

Description

- **visualisation of different condensation processes**
- **software for data acquisition**

Condensation forms when steam meets a medium with a lower temperature than the saturation temperature for the existing partial pressure of the steam. Factors such as the material and surface roughness of the medium influence the heat transfer and thus the type of condensation. In practice, it is usually film condensation. Dropwise condensation only forms when the cooling surface is very smooth and poorly wettable, e.g. Teflon. Knowledge of condensation processes is applied e.g. in steam power plants or at distillation processes.

The WL 230 experimental unit can be used to demonstrate the different condensation processes using two tubular shaped water-cooled condensers made of different materials. Dropwise condensation can be demonstrated by means of the condenser with a polished gold-plated surface. Film condensation forms on the matt copper surface of the second condenser, thus making it possible to examine film condensation.

The tank can be evacuated via a water jet pump. The boiling point and the pressure in the system are varied by cooling and heating power. Sensors record the temperature, pressure and flow rate at all relevant points. The measured values can be read on digital displays. At the same time, the measured values can also be transmitted directly to a PC via USB. The data acquisition software is included. The heat transfer coefficient is calculated from the measured values. The influence of non-condensing gases, pressure and the temperature difference between the surface and steam can be examined in further experiments.

Learning objectives/experiments

- dropwise and film condensation
- determination of the heat transfer coefficient
- effect of pressure, temperature and non-condensable gases on the heat transfer coefficient

WL 230
Condensation process

1 condensers, 2 heat exchanger, 3 steam trap, 4 displays for temperature, flow rate and pressure, 5 heater, 6 cooling water connections, 7 water jet pump, 8 temperature sensor, 9 valve for adjusting the cooling water, 10 cooling water flow rate sensor

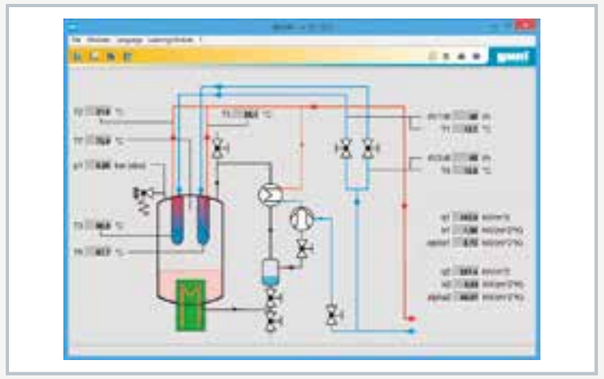

Software screenshot

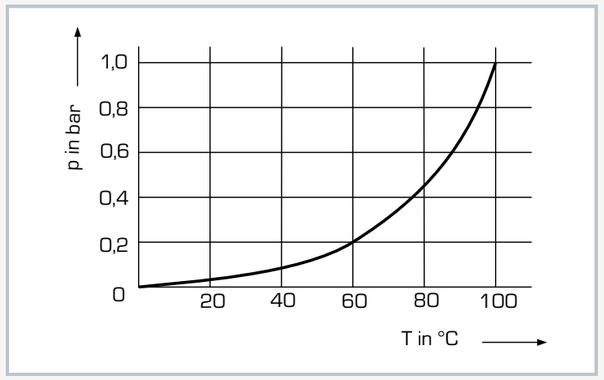

Vapour pressure curve for water: p pressure, T temperature

Specification

[1] visualisation of the condensation process of water in a transparent tank
[2] two water-cooled tubes as condensers with different surfaces to realise film condensation and dropwise condensation
[3] controlled heater to adjust the boiling temperature
[4] water jet pump to evacuate the tank
[5] pressure switch and safety valve for safe operation
[6] sensors for temperature, pressure and flow rate with digital display
[7] GUNT software for data acquisition via USB under Windows 7, 8.1, 10

Technical data

Heater
- output: 3kW, freely adjustable

Condenser
- 1x tube with matt copper surface
- 1x tube with a polished gold-plated surface

Water jet pump
- flow rate: 4...12L/min
- pressure: 16mbar

Safety valve: 2200mbar absolute

Measuring ranges
- pressure: 0...10bar absolute
- flow rate: 0,2...6L/min
- temperature: 4x 0...100°C, 3x 0...200°C

230V, 50Hz, 1 phase
230V, 60Hz, 1 phase
230V, 60Hz, 3 phases
UL/CSA optional
LxWxH: 1000x550x790mm
Weight: approx. 85kg

Required for operation

water connection: 1bar, max.1000L/h, drain
PC with Windows recommended

Scope of delivery

1 experimental unit
5L distilled water
1 set of hoses
1 GUNT software CD + USB cable
1 set of instructional material

2

Heat exchangers

Introduction

Basic knowledge Heat exchangers	066

Heat transfer

WL 314 Convective heat transfer in air flow	070
WL 314.01 Heat transfer in pipes in parallel flow	072
WL 314.02 Heat transfer in pipes in mixed flow	073
WL 314.03 Heat transfer in a tube	074

Recuperators

WL 308 Heat transfer in pipe flow	076
WL 302 Heat transfer in the tubular heat exchanger	078
WL 315.01 Shell & tube heat exchanger steam/water	080
ET 300 Finned tube heat exchanger water/air	082
Overview Series WL110 Heat exchanger with supply unit	084
WL 110 Heat exchanger supply unit	086
WL 110.01 Tubular heat exchanger	088
WL 110.02 Plate heat exchanger	090
WL 110.03 Shell & tube heat exchanger	092
WL 110.04 Stirred tank with double jacket and coil	094
Overview WL 312 Heat transfer in air flow	096
WL 312 Heat transfer in air flow	098
Overview WL 315C Comparison of various heat exchangers	100
WL 315C Comparison of various heat exchangers	102

Direct-contact heat exchangers

Overview WL 320 Wet cooling tower	104
WL 320 Wet cooling tower	106

Fluidised bed heat exchanger

WL 225 Heat transfer in the fluidised bed	108

Basic knowledge

Heat exchangers

Heat exchangers are used for heating, cooling, evaporation or condensation of media at different temperatures. The basic function is to transfer the thermal energy of a medium with a higher temperature level to a medium with a lower temperature level.

According to the second law of thermodynamics, heat transport always goes from the medium with a higher temperature to the medium with a lower temperature.

Heat exchangers are used in energy engineering, the chemical industry and the food industry, but heat exchangers are also of great importance for computer technology and the automotive sector. Heat transfer can be both the main and auxiliary process. A distinction is made between direct and indirect heat exchangers depending on whether the media involved come into direct contact with each other or not.

Classification of heat exchangers according to the operating principle

Indirect heat exchangers

Regenerators
- hot-blast heaters in blast furnaces
- rotary heat exchangers

In **regenerators**, the hot and cold medium flows through the storage tank **alternately**. The heat transfer is indirect, since the heat flux to be transferred is first transferred to a storage medium and then passed to the target medium after a delay.

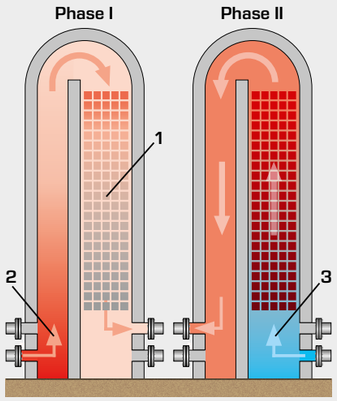

Hot-blast heater in discontinuous operation

Phase I: storage mass **1** is heated by flue gas **2**,
Phase II: cold air **3** is led past the previously heated storage mass and heats up in the process.

Recuperators
- tubular heat exchangers
- shell & tube heat exchangers
- plate heat exchangers

In **recuperators**, two media flow through **simultaneously** in a steady state. The media flows can be guided in parallel flow, counterflow and cross-flow. There is a partition between the media flows, which serves as a transfer surface. The heat is transferred indirectly from the hot medium to the partition and from the partition to the cold medium, without time lag.

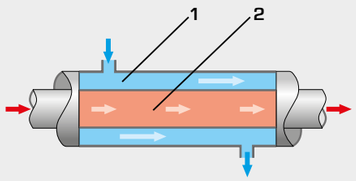

Tubular heat exchanger in parallel flow operation

1 outer tube,
2 inner tube;
hot medium,
cold medium

Direct heat exchangers

Mixed heat exchangers
- wet cooling tower
- intercooling in rolling mills

Direct-contact heat exchangers bring two media with different temperatures **into contact** and mix them together. The heat and mass transfer takes place directly.

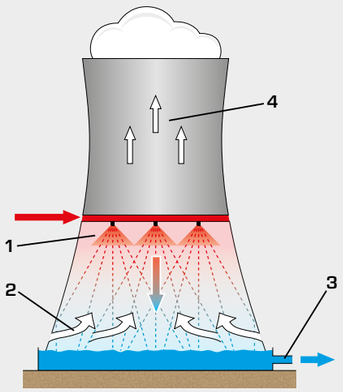

Wet cooling tower

1 atomized spray of hot water,
2 air inlet,
3 cooled water,
4 humid air

Liquids or gases are usually used as **working media**, in special cases also evaporating liquids or condensing vapours.

Heat exchanger types

Due to the large number of different applications, different designs have been developed for recuperators, some of which work in very different ways.

Type	Application / media	Advantages and disadvantages
Tubular heat exchanger 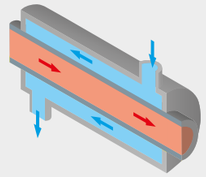	■ use with low cooling/ heating power ■ transfer between two liquids ■ suitable for highly viscous fluids	Advantages ■ simple design ■ high pressures can be transferred ■ easy to clean Disadvantages ■ large design, high costs per heat transfer area
Shell & tube heat exchanger 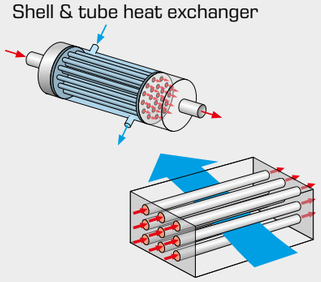	■ use with very wide temperature and pressure range ■ transfer between liquids and gases, between two liquids or between two gases	Advantages ■ simple structure ■ ideal for heat transfer from steam to water Disadvantages ■ large design
Plate heat exchanger 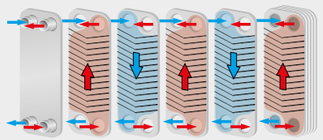	■ use even with minimal temperature differences ■ transfer between liquids and gases, between two liquids or between two gases ■ with and without phase change	Advantages ■ large exchange area due to embossing of the plate surface ■ compact design, low filling volume ■ good convective heat transfer due to turbulent flow Disadvantages ■ high pressure loss ■ maintenance intensive

Heat transfer

The entire transferred heat flux is directly dependent on the transference surface. This is why different wall geometries (e.g. fins) are used, in order to increase the transfer surface. Heat transfer is divided into three stages: convective heat transfer from the hot medium to the wall, thermal conduction through the wall and convective heat transfer from the wall to the cold medium.

The convective heat transfer from the medium to the wall or from the wall to the medium is dependent upon the material type, the flow velocity and the aggregate states of the media, amongst other things. The thermal conduction in the wall depends on the wall thickness and the wall material, described by the overall heat transfer coefficient **k** or the length-related overall heat transfer coefficient **k***.

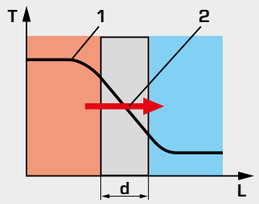

1 temperature profile, **2** resulting heat flux;
hot medium, cold medium,
T temperature, **L** length, **d** wall thickness

Basic knowledge

Heat exchangers

Flow conditions in the heat exchanger

The flow condition in the device can vary depending on the design of the heat exchanger. However, the two media flows are never mixed; there is only heat transfer between the media.

The possible flow conditions are counterflow, parallel flow, cross flow or combinations thereof.

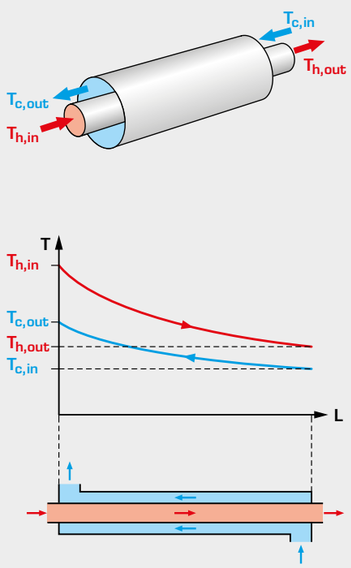

Temperature profiles in **counterflow operation** in a tubular heat exchanger

In **counterflow operation**, two media flow in the opposite direction to each other. The entry point of one medium is the exit point of the other medium running in the opposite direction.

If the heat exchanger is well designed, the outlet temperature of the cold side can even be higher than the outlet temperature of the hot side.

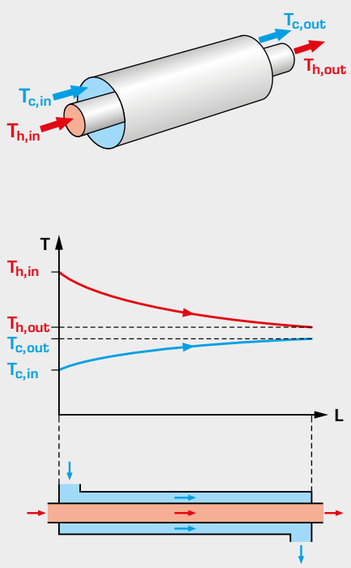

Temperature profiles in **parallel flow operation** in a tubular heat exchanger

When operating a heat exchanger in **parallel flow**, both media flow in the same direction and enter the heat exchanger at the same point.

The maximum outlet temperature of the cold side can be equal to the outlet temperature of the hot side.

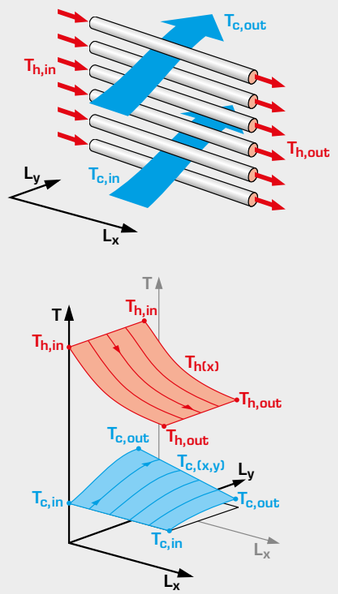

Temperature profile for a single row of tubes with single-sided mixed **cross flow**

In **cross-flow operation**, the directions of the media intersect.

Cross flow is used in particular to accurately control the temperature of temperature-sensitive products.

In order to use the advantages of all flow conditions, combinations of the basic forms are common. For example, a multiple-channel shell & tube heat exchanger can be used in cross-flow operation for quick and safe temperature control of large quantities of aggressive chemicals. Plate heat exchangers operated in counterflow are often used when a space-saving design is required.

In practice, heat exchangers are either **designed, recalculated** or **evaluated.**

The **design** determines the transference capacity at known material flows and temperatures in order to decide the geometry of an optimum heat exchanger.

Recalculation determines the outlet temperatures of the media and the transferred heat flux. This is used to check to what extent the outlet temperatures of the selected heat exchanger deviate from the required or limiting outlet temperatures. It is also common to recalculate existing heat exchangers for comparison with real measurement data.

Evaluation enables a statement to be made about the over- or under-dimensioning of the selected heat exchanger where it is to be installed in the process stage. When evaluating a heat exchanger, its geometric data and all process engineering data are taken into consideration.

The "Heat exchangers" section first looks at the convective heat transfer between the surface of a body and a fluid. Furthermore, indirect heat exchangers, recuperators, with their different designs and a wet cooling tower are presented as examples of direct heat exchangers. One special feature is the heat transfer by means of fluidised bed technology, which is investigated using a fluidised bed reactor.

Topics	GUNT products
Convective heat transfer	
Forced convection	WL 314
Parallel flow	WL 314.01
Mixed flow	WL 314.02
Flow profiles	WL 314.03
Indirect heat transfer – recuperators	
Tube heat exchangers	WL 312.01
Tubular heat exchangers	WL 302, WL 308, WL 110.01, WL 315C
Plate heat exchangers	WL 110.02, WL 315C
Shell & tube heat exchangers	WL 110.03, WL 315C
Stirred tank with double jacket and coiled tube	WL 110.04, WL 315C
Finned tube heat exchangers	ET 300, WL 312.02, WL 312.03, WL 315C
Direct heat transfer	
Wet cooling tower	WL 320
Heat transfer in the fluidised bed	
Heat transfer in the fluidised bed	WL 225

WL 314
Convective heat transfer in air flow

Description

- **convective heat transfer in heat exchangers with different geometries**
- **additional heat exchanger models available as accessories**

Convective heat transfer refers to the transfer of heat between a surface and a fluid. Convective heat transfer processes are associated with fluid flow movements, i.e. convection. In the case of forced convection, a pump or fan directs the fluid to the transfer surfaces, while in the case of free convection, a flow occurs only due to the difference in density of the heated fluid.

WL 314 and its accessories are used to study convective heat transfer at different geometries of the transfer surface. Typical models such as tube bundles, externally heated tubes and internally heated cylinders are considered. In addition, the chimney effect can be demonstrated under free convection in an air duct.

An air duct with fan serves as the measuring section, in which the model of a heat exchanger is inserted quickly and conveniently with the aid of quick-release fasteners.

The air flows past the model, heats up and then exits through an air duct. A streamlined inlet element in the air duct provides a homogeneous flow for conducting the experiment. The volumetric flow rate is set via a throttle valve at the fan outlet. The air duct includes two windows to observe the experiments.

The model of the shell & tube heat exchanger includes two interchangeable tube bundles with different geometries. A heating element, which can be positioned anywhere in the tube bundle, simulates a heated tube. In this way, convective heat transfer can be determined depending on the tube position. Other models are available as accessories.

A Pitot tube and a pressure gauge are used to determine the velocity distribution in front of and behind the models. Heating power and volumetric flow rate can be adjusted. The heating power and the temperatures of air and heater are displayed digitally.

Learning objectives/experiments

- interplay between Nusselt number, Reynolds number and heat flow
- measurement of pressure distribution in the air duct and development of the velocity profile
- measurement of convective heat transfer in the tube bundle as a function of position
- pressure loss across the tube bundle
- measurement of convective heat transfer with free convection in the air duct (chimney effect)

WL 314
Convective heat transfer in air flow

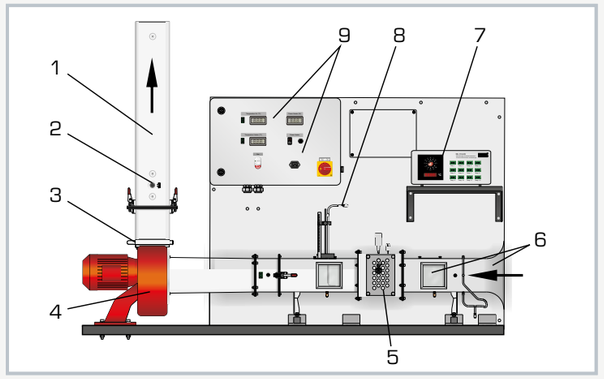

1 air duct, 2 heating element in the air duct, 3 throttle valve, 4 fan, 5 interchangeable model shell & tube heat exchanger with heating element, 6 air duct with window, 7 measuring amplifier for accessory WL 314.03, 8 movable Pitot tube, 9 displays and controls

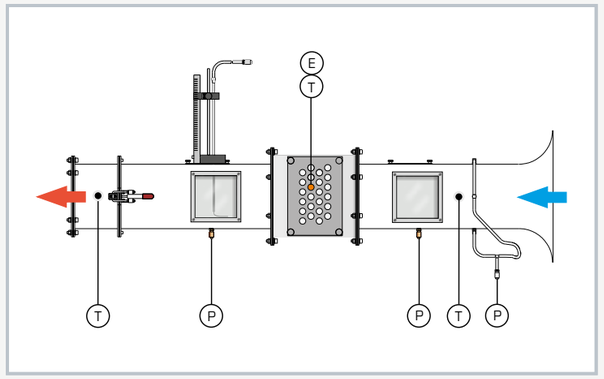

Arrangement of the measuring points in the air duct:
T temperature, P pressure, E heating element output

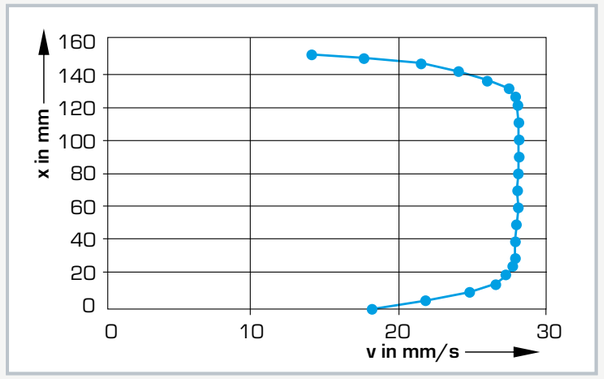

Velocity profile in the air duct
v velocity, x distance

Specification

[1] convective heat transfer with forced convection
[2] air duct with streamlined inlet and windows for observation of the experiments
[3] replaceable tube bundle with two different tube diameters included
[4] heating element Ø 10mm or Ø 13mm can be used in the tube bundle at any desired position
[5] air duct allows experiments on free convection and demonstration of the chimney effect
[6] heating element Ø 10mm can be used in the air duct
[7] overheat protection for the heating elements
[8] adjustable air volumetric flow rate
[9] movable Pitot tube with pressure gauge for determining a velocity profile under forced convection
[10] display of air temperature, heating temperature and heating power
[11] other models available as accessories

Technical data

Air duct
- flow cross-section: 150x150mm
- length: 1540mm

Fan
- output: 1,5kW
- max. volumetric flow rate: 2160m^3/h

Tube bundle
- 23x tube (Ø 10mm)
- 23x tube (Ø 13mm)

2 heating elements
- length: 130mm
- output: 220W (Ø 10mm)
- output: 250W (Ø 13mm)
- overheat protection at 80°C

Measuring ranges
- pressure: ±200mmbar
- temperature: 2x max. 80°C
- power: 0...400W

230V, 50Hz, 1 phase
230V, 60Hz, 1 phase; 230V, 60Hz, 3 phases
UL/CSA optional
LxWxH: 1930x800x2000mm
Weight: approx. 205kg

Scope of delivery

1 trainer
1 set of cables
1 set of hoses
1 pressure meter
1 display and control unit
1 set of instructional material

WL 314.01
Heat transfer in pipes in parallel flow

Learning objectives/experiments

- heat transfer inside the tube and around a tube
- comparison of convective heat transfer in a ring heater and a heating element
- analysis of the interrelationships between Nusselt, Reynolds and Prandtl
- determination of the overall heat transfer coefficient
- determination of flow velocity

Specification

[1] heating elements and pipe section form a tubular heat exchanger
[2] ring heater as partially heated tube
[3] heating element as heated inner tube
[4] heating elements arranged parallel to the flow
[5] 2 thermocouples type K: measurement on the surface of the heating element and on the inner surface of the ring heater
[6] overheat protection in WL 314
[7] accessory installed in WL 314 with quick-release fasteners

Technical data

Pipe section
- Ø 60mm

Ring heater
- output: 220W
- Ø 60mm
- length: 30mm

Heating element
- output: 250W
- Ø 8mm
- length: 130mm

230V, 50Hz, 1 phase
230V, 60Hz, 1 phase
UL/CSA optional
LxWxH: 1050x210x320mm
Weight: approx. 10kg

Scope of delivery

1 experimental unit
1 set of instructional material

Description

- **two heating elements for different considerations of the convective heat transfer**
- **heating elements parallel to the flow in the tube**

The WL 314.01 accessory extends the experimental scope of WL 314 to include the topic: convective heat transfer inside and on the tube under parallel flow. Convective heat transfer from the tube wall to the fluid is studied.

The core element of WL 314.01 is a transparent pipe section, equipped with a ring heater and a heating element for different considerations of convective heat transfer. The heating elements together with the pipe section form a tubular heat exchanger. The ring heater is used to study the convective heat transfer from the outer wall to the inside of the tube.

A heating element along the pipe axis, on the other hand, enables the study of the convective heat transfer from a heated inner tube to the outer tube. The heating elements are arranged parallel to the flow in the tube.

The accessory is inserted into the air duct of WL 314 by means of quick-release fasteners. A fan in the air duct sucks in ambient air and conveys it through the pipe section of the accessory. The air is directed past the transfer surfaces by forced convection and heats up.

The power and surface temperature of the two electric heaters is measured and displayed on the WL 314 trainer.

WL 314.02
Heat transfer in pipes in mixed flow

Learning objectives/experiments

- heat transfer from the pipe wall to the fluid
- interrelationships between Nusselt, Reynolds and Prandtl
- characteristics of shell & tube heat exchangers
- pressure loss over the entire measuring section
- determination of the overall heat transfer coefficient

Specification

[1] pipe section and tube bundle with heating element form a shell & tube heat exchanger
[2] tube bundle with 18 unheated tubes and 1 heating element in the centre as a heated tube
[3] up to 8 deflection plates guide the air through the tube bundle
[4] thermocouple type K: temperature measurement on the shell surface of the rod heater
[5] accessory installed in WL 314 with quick-release fasteners

Technical data

Pipe section
- Ø 100mm

Heating element
- output: 250W
- heat transfer surface: 0,011m^2

Tube bundle
- 18 tubes
- heat transfer surface per tube: 0,011m^2

230V, 50Hz, 1 phase
230V, 60Hz, 1 phase
UL/CSA optional
LxWxH: 1050x210x320mm
Weight: approx. 15kg

Scope of delivery

1 experimental unit
1 set of instructional material

Description

- **heat transfer in the tube bundle**
- **model of a shell & tube heat exchanger with deflection plates**

The WL 314.02 accessory extends the experimental scope of WL 314 to include the topic: convective heat transfer on pipes with mixed flow. Convective heat transfer from the tube wall to the fluid is studied.

The core element of WL 314.02 is a transparent pipe section, equipped with a tube bundle. A heating element located in the centre of the tube bundle simulates a heated pipe. The tube bundle together with the pipe section form a shell & tube heat exchanger. The experiment examines the convective heat transfer between tube and fluid.

The accessory is inserted into the air duct of WL 314 using quick-release fasteners. A fan in the air duct sucks in ambient air and conveys it through the pipe section of the accessory. The air is directed to the transfer surfaces by forced convection and heated up. The pipe section is constructed in such a way that deflection plates guide the air through the tube bundle. The number of deflections can be varied by removing and installing the deflections plates.

The power and surface temperature on the shell surface of the heating element is measured and displayed on the WL 314 trainer.

WL 314.03
Heat transfer in a tube

Description

- **flow in an externally heated pipe**
- **convective heat transfer in the pipe cross-section and in the longitudinal profile of the pipe**

The WL 314.03 accessory extends the experimental scope of WL 314 to include the topic: convective heat transfer inside the pipe. Convective heat transfer from the tube wall to the parallel flowing fluid is studied.

The core element of WL 314.03 is a pipe section, equipped with a heat mat to heat the outer surface of the pipe from the outside. There are six temperature measuring points in the pipe wall. A Pitot tube is used to measure the velocity distribution in the pipe cross-section.

The accessory is inserted into the air duct of WL 314 using quick-release fasteners. A fan in the air duct sucks in ambient air and conveys it through the pipe section of the accessory. The air is directed past the transfer surfaces by forced convection and heats up.

The power and surface temperature of the electric heat mat and the temperatures in the pipe wall are measured and displayed on the WL 314 trainer.

Learning objectives/experiments

- heat transfer from the pipe shell to the fluid
- temperature profile along the pipe
- analysis of the interrelationships between Nusselt, Reynolds and Prandtl
- determination of the overall heat transfer coefficient
- determination of the flow velocity

Specification

[1] heated pipe section as tube heat exchanger
[2] pipe heated from the outside by heat mat
[3] 6 thermocouples type K: measurement in the pipe wall
[4] 1 thermocouple type K: measurement on the heat mat
[5] moveable Pitot tube for determining a velocity profile
[6] accessory installed in WL 314 by quick-release fasteners

Technical data

Pipe section
- Ø 32mm
- length: 0,5m
- heat transfer surface: 0,0503m^2

Heat mat
- output: 250W
- length: 500mm
- Ø 35mm
- temperature limit: 120°C

LxWxH: 1050x210x320mm
Weight: approx. 30kg

Scope of delivery

1 experimental unit
1 measuring amplifier
1 set of instructional material

We take quality seriously

Our quality management system has been certified since 1998.

WL 308
Heat transfer in pipe flow

Description

- **model of a tubular heat exchanger**
- **heat exchanger can be operated in parallel flow and counterflow**
- **temperature measuring points on the inner tube wall and in the flow**
- **hot water circuit with temperature controller**

The convective heat transfer during pipe flow is determined by internal flow processes inside the tube and by heat conduction processes in the tube walls. With the WL 308 experimental unit, it is possible to study convective heat transfer on the pipe wall and inside the pipe of a tubular heat exchanger. Both parallel flow and counterflow mode with their different temperature curves are demonstrated in experiments.

The core element of the experimental unit is a double tube, which serves as the heat exchanger. Hot water is pumped through the inner tube. Cold water flows in the outer tube either in parallel flow or counterflow. The hot water emits part of its thermal energy to the cold water.

The non-linear temperature progression along the tubular heat exchanger is demonstrated by measuring the water temperatures in both tubes at the inlet, outlet and half of the transfer section. Measuring the tube wall temperature on the inner tube at half the transfer section allows the investigation of the convective heat transfer at the wall.

The closed hot water circuit contains a tank with electrical heater and a pump. Cold water is supplied and disposed of via the laboratory network. Valves are used to adjust the flow rate of hot and cold water.

The flow rate and all relevant temperatures are recorded and displayed on the experimental unit.

Learning objectives/experiments

- record temperature curves
  - in parallel flow mode
  - in counterflow mode
- convective heat transfer on pipe walls and in the flow
- influence of mass flows on the temperature profile
- determining thermal balances
- determining the overall heat transfer coefficient

WL 308
Heat transfer in pipe flow

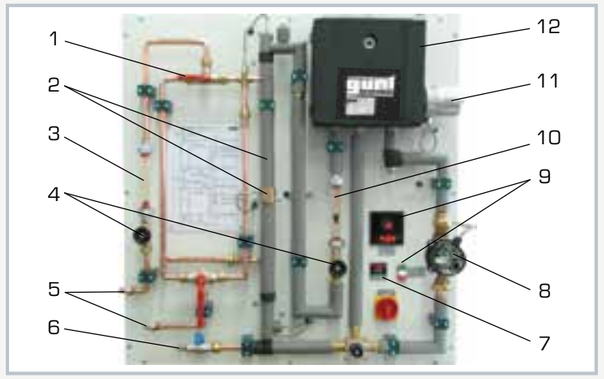

1 3-way plug valve for setting the operating mode, 2 double tube as heat exchanger with temperature sensors, 3 cold water flow meter, 4 valves for adjusting the flow rate, 5 cold water connection and outlet, 6 hot water connection, 7 temperature controller, 8 pump, 9 displays and controls, 10 hot water flow meter, 11 heater, 12 hot water tank

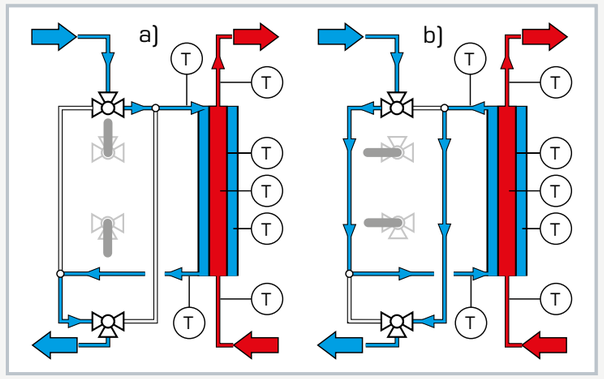

a) counterflow mode, b) parallel flow mode; blue: cold water, red: hot water, T temperature

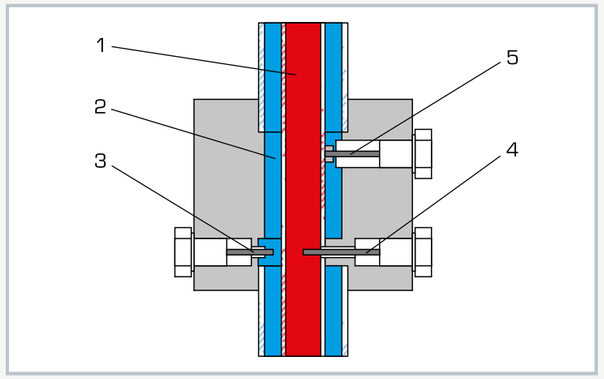

1 hot water, 2 cold water, 3 cold water temperature measuring point, 4 hot water temperature measuring point, 5 wall temperature of the inner tube measuring point

Specification

[1] convective heat transfer on tube walls and in the flow using the model of a tubular heat exchanger
[2] parallel flow or counterflow operation can be set via 3-way plug valves
[3] closed hot water circuit, insulated, with pump, heater and temperature controller
[4] constant flow rate of hot water via bypass setting
[5] flow rates adjustable via valves
[6] temperature sensors: inlet and outlet temperatures and after half of the transfer section
[7] additional measurement of the tube wall temperature at the inner tube after half of the transfer section
[8] flow meter for hot and cold water in each case

Technical data

Heat transfer surface
- average transfer surface: 0,013m^2

Tube inner, copper
- 8x 1mm

Pump
- max. flow rate: 4m^3/h
- max. head: 4m

Heater: 3kW, with overheating protection
Tank: 6,5L

Measuring ranges
- flow rate: 2x 20...250L/h
- temperature: 7x 0...100°C

230V, 50Hz, 1 phase
230V, 60Hz, 1 phase; 230V, 60Hz, 3 phases
UL/CSA optional
LxWxH: 1000x580x1070mm
Weight: approx. 50kg

Required for operation

cold water connection, drain

Scope of delivery

1 experimental unit
1 set of accessories
1 set of instructional material

WL 302
Heat transfer in the tubular heat exchanger

Learning objectives/experiments

- record temperature curves
  - in parallel flow mode
  - in counterflow mode
- determine average heat flow for parallel flow and counterflow operation
- determine average overall heat transfer coefficients

Description

- **model of a tubular heat exchanger**
- **heat exchanger can be operated in parallel and counterflow**

Tubular heat exchangers are the simplest type of heat exchanger and are preferably used when heat is transferred at high pressure differences or between highly viscous media (e.g. sewage sludge). One advantage is that the pipe space is flowed through evenly and is free of flow dead zones.

The WL 302 trainer enables the study of the characteristic properties of heat transfer on the model of a tubular heat exchanger. The heat transfer takes place in coaxially arranged tubes with the hot water passing through the inner tube. Cold water flows in the outer tube. In doing so, the hot water emits some of its thermal energy to the cold water.

In experiments, both parallel flow and counterflow operation can be demonstrated, with their different temperature curves.

The non-linear temperature progression along the tubular heat exchanger is demonstrated by measuring the water temperatures in both tubes at the inlet, outlet and half of the transfer section. A measurement of the pipe wall temperature also allows the investigation of convective heat transfer at the wall. In the experiment analysis, the important variables such as heat flux, overall heat transfer coefficient and heat losses are determined.

The closed hot water circuit contains a tank with electrical heater and a pump. A thermostat keeps the hot water temperature constant. The cold water is supplied and disposed of via the laboratory network.

The flow rate and all relevant temperatures are recorded. The measured values are read from digital displays and can be transmitted simultaneously via USB directly to a PC, where they can be analysed using the software included.

WL 302
Heat transfer in the tubular heat exchanger

1 bleed valve, 2 temperature sensor, 3 heat exchanger, 4 ball valve for setting the operating mode, 5 tank with heater, 6 pump, 7 water connections, 8 flow meter, 9 valve for setting the flow rate, 10 displays and controls

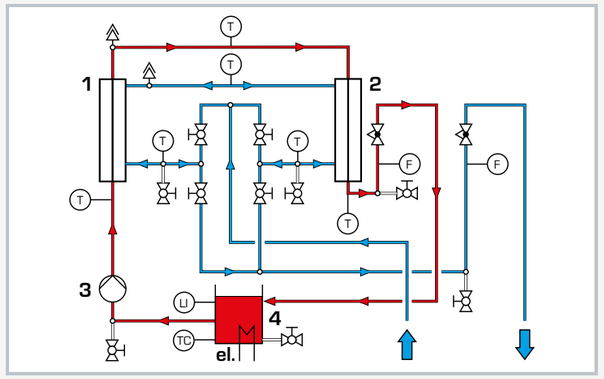

1 and 2 heat exchanger, 3 pump, 4 tank
T temperature, F flow rate

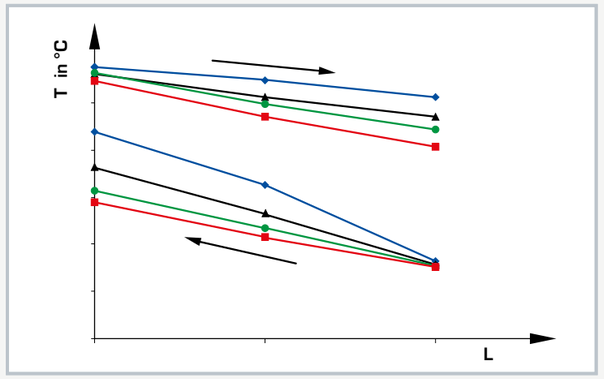

Temperature profile in counterflow mode with different cold water flow rates at constant hot water flow rate

Specification

[1] convective heat transfer on a model of a tubular heat exchanger
[2] parallel flow or counterflow operation adjustable via ball valves
[3] closed hot water circuit, insulated, with tank, pump and heater with thermostat
[4] temperature sensors: inlet and outlet temperatures as well as after half the heat transfer path
[5] flow measurement via 2 impeller flow rate sensors
[6] GUNT software for data acquisition via USB under Windows 7, 8.1, 10

Technical data

Pump
- power consumption: 70W
- max. flow rate: 3300L/h
- max. head: 4m

Heater
- output: 2kW

Thermostat: 20...85°C

Heat transfer surfaces
- hot side: 0,0306m^2
- cold side: 0,0402m^2
- average transfer surface: 0,0354m^2

Tank: 20L

Measuring ranges
- temperature: 6x 0...100°C
- flow rate: 2x 0...360L/h

230V, 50Hz, 1 phase
230V, 60Hz, 1 phase, 120V, 60Hz, 1 phase
UL/CSA optional
LxWxH: 1380x790x1950mm
Weight: approx. 165kg

Required for operation

cold water connection, drain
PC with Windows recommended

Scope of delivery

1 trainer
1 set of accessories
1 GUNT software CD + USB cable
1 set of instructional material

WL 315.01
Shell & tube heat exchanger steam/water

Learning objectives/experiments

- familiarisation with the heat transfer process between steam and water
- determine of heat flows of steam and water
- determine the efficiency or losses
- determine the overall heat transfer coefficient

Description

- **convective heat transfer between steam and water**
- **thermostatic steam regulation**

Steam is particularly suitable as a heat transfer medium for heating fluids. The steam pressure can be used to limit the maximum temperature so that sensitive fluids can be heated safely. Tube bundles, for example, are used as heat exchangers. The steam condenses and transfers its condensation heat to the fluid being heated. The condensate can then be returned to the steam process.

The WL 315.01 trainer is used to study the convective heat transfer between steam and water. The core element of the trainer is a shell & tube heat exchanger. Heating steam in the pipe jacket and cold water in the pipes are directed past each other in counterflow.

In doing so, the heating steam emits some of its thermal energy to the cold water. The heated water flows into a tank, where it is available to be withdrawn.

In the steam pipe downstream of the shell & tube heat exchanger there is a condensate separator and a second, small heat exchanger as condenser for condensing the flash steam.

The amount of steam introduced is regulated by a thermostatic valve so that the water temperature in the hot water tank is at the desired temperature. Parallel to the thermostatic valve and shut-off valve, the heating steam can be manually directed into the shell & tube heat exchanger by means of a manual valve. The flow rate in the cold water circuit can be adjusted.

A strainer at the heating steam inlet protects against coarse particles in the steam pipes. The hot water tank is fitted with a safety valve to protect the system from positive pressure.

By measuring temperatures, pressures, flow rate and condensate quantity, it is possible to determine the energy, efficiency and overall heat transfer coefficient.

The heating steam is supplied either from the laboratory supply or by means of the accessory WL 315.02.

WL 315.01
Shell & tube heat exchanger steam/water

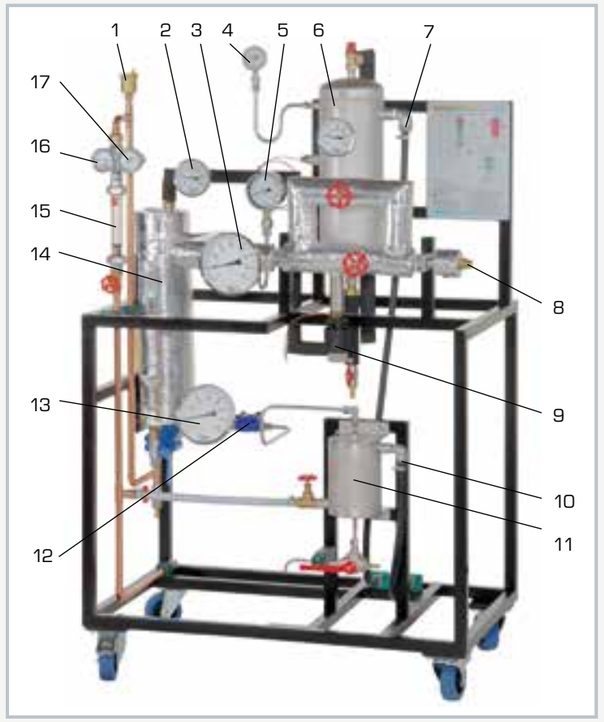

1 bleed valve in the cold water circuit, 2 hot water thermometer, 3 steam thermometer, 4 hot water manometer, 5 steam manometer, 6 hot water tank with thermometer and safety valve, 7 hot water extraction, 8 steam connection, 9 thermostatic valve, 10 cold water outlet, 11 condenser, 12 condensate separator, 13 steam thermometer downstream of condenser, 14 shell & tube heat exchanger, 15 flow meter, 16 cold water thermometer, 17 cold water manometer

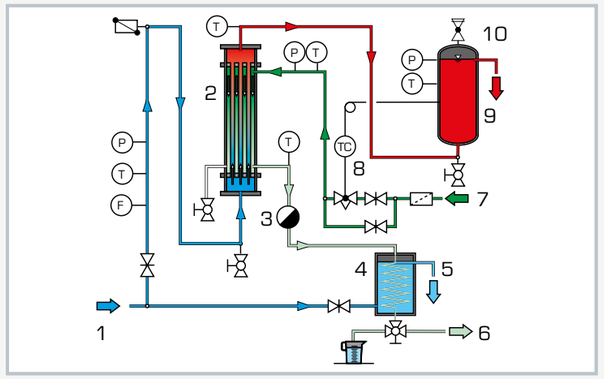

1 cold water inlet, 2 shell & tube heat exchanger, 3 condensate separator, 4 condenser, 5 cold water outlet, 6 condensate extraction, 7 steam inlet, 8 thermostatic valve, 9 hot water extraction, 10 hot water tank with safety valve; P pressure, T temperature, F flow rate, TC thermostat; blue: cold water, red: hot water, green: steam, light green: condensate, light blue: cooling water

Specification

[1] shell & tube heat exchanger for studying the convective heat transfer between steam and water in counterflow
[2] steam volume controlled by thermostatic valve
[3] additional manual valve for the introduction of heating steam into the shell & tube heat exchanger
[4] precise determination of the steam volume by measuring the condensate volume
[5] safety valve in the hot water tank for safe operation
[6] measurement of temperatures, pressures, flow rate and condensate volume
[7] supply with heating steam from the laboratory network or from WL 315.02

Technical data

Shell & tube heat exchanger
- heat transfer surface: 0,178m^2
- output: 14,6kW
- tubes 12x, stainless steel
  - Ø 12mm
  - length: 0,605m

Steam
- consumption: 13kg/h
- max. pressure saturated steam: 7bar

Steam control thermostat: 50...120°C

Measuring cup for condensate: 250mL

Measuring ranges
- flow rate: 40...400L/h
- temperature: 3x 0...120°C, 1x 0...160°C
- pressure: 1x -1...9bar, 2x 0...4bar

LxWxH: 1010x610x1630mm
Weight: approx. 85kg

Required for operation

water connection, drain 400L/h,
steam 13kg/h, pressure: 7bar

Scope of delivery

1 trainer
1 set of accessories
1 set of instructional material

ET 300
Finned tube heat exchanger water/air

Learning objectives/experiments

- familiarisation with the heat transfer process between water and air
- determination of heat flows from water and air
- determination of the efficiency or losses
- energy balances at the heat exchanger
- plot pump characteristic

Description

- **convective heat transfer between water and air**
- **closed hot water circuit**

Tubular heat exchangers are often used for heating or cooling gaseous media, such as air coolers for internal combustion engines. Hot water flows in the tubes, which are surrounded by a flowing gaseous medium, e.g. cold air. The hot medium emits some of its thermal energy to the cold medium.

The tubes are fitted with fins in order to increase the heat transfer surface and thus improve the convective heat transfer.

The ET 300 trainer is used for quantitative investigations on a finned-tube heat exchanger using the media hot water and cold air. The core element of the trainer is an air duct with fan, in which a finned-tube heat exchanger is installed.

A streamlined inlet element and a flow straightener in the air duct provide a homogeneous flow for carrying out the experiment. The volumetric flow rate is adjusted via a throttle valve at the fan outlet and measured by a measuring nozzle at the inlet into the fan.

The trainer has a closed hot water circuit consisting of: water tank with heater, pump, adjustable flow rate, electromagnetic flow rate sensor and finned-tube heat exchanger. The flow rate can be adjusted via a valve.

Energy balances can be established by measuring the inlet and outlet temperatures and the flow rates. In addition, a pressure sensor in the water circuit makes it possible to plot a pump characteristic. The measured values are read from digital displays and can be transmitted simultaneously via USB directly to a PC, where they can be analysed using the software included.

ET 300
Finned tube heat exchanger water/air

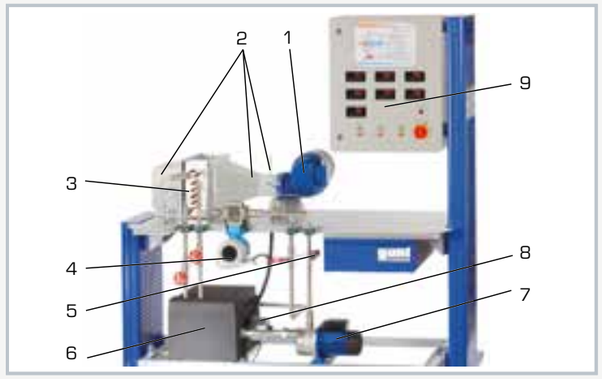

1 fan, 2 air duct with temperature measuring points, 3 heat exchanger, 4 flow meter, 5 pressure sensor, 6 water tank, 7 pump, 8 heater with thermostat, 9 displays and controls

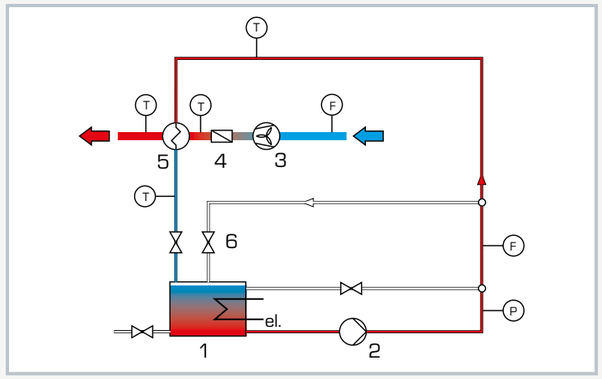

1 water tank with heater, 2 pump, 3 fan, 4 throttle valve, 5 heat exchanger, 6 valves for adjusting the experiment (heat exchanger or pump characteristic); F flow rate, P pressure, T temperature

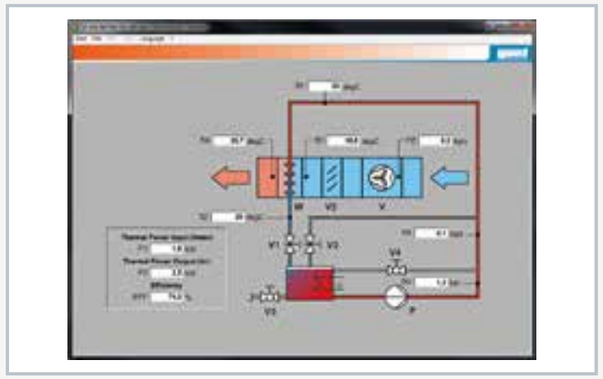

Software screenshot

Specification

[1] finned-tube heat exchanger to study convective heat transfer between water and air
[2] function of the heat exchanger as an air heater or water cooler
[3] closed hot water circuit with electric heater, thermostat, water tank and pump
[4] adjustable water and air flow
[5] determination of the air volumetric flow rate by differential pressure at measuring nozzle
[6] digital display of temperatures, flow rates and pressure
[7] GUNT software for data acquisition via USB under Windows 7, 8.1, 10

Technical data

Finned-tube heat exchanger
- material: Cu/Al
- average transfer surface: 2,80m^2 (air side)
- output: 2kW
- water temperature: 70°C

Pump
- power consumption: 470W
- max. flow rate: 4,2m^3/h
- max. head: 20,5m

Fan
- power consumption: 0,25kW
- max. flow rate: 13m^3/min
- max. pressure difference: 430Pa

Water tank: 28L
Heater: 2kW
Thermostat: max. 80°C

Measuring ranges
- temperature: 4x 0...100°C
- flow rate: water 0...6m^3/h
- pressure: water 0...4 bar abs.
- mass flow: air 0...250g/s

230V, 50Hz, 1 phase
230V, 60Hz, 1 phase; 230V, 60Hz, 3 phases
UL/CSA optional
LxWxH: 1730x800x1900mm
Weight: approx. 220kg

Required for operation

PC with Windows recommended

Scope of delivery

1 trainer
1 GUNT software CD + USB cable
1 set of instructional material

Series WL 110
Heat exchanger with supply unit

Teaching the fundamentals of heat transfer through experiments

Clear, simple, reliable, progress tracking

WL 110 Heat exchanger supply unit with the WL 110.03 Shell & tube heat exchanger

The supply unit can accommodate four different types of heat exchangers

Perfect educational concept: modular, flexible, versatile

WL 110.20 Water chiller for WL 110

The cold water needed for all the experiments is usually supplied from a laboratory tap. However when the ambient temperature in the laboratory is too high, the water chiller is recommended for reasonable experimental conditions.

Hot water is also needed for the experiments. It is supplied from the service unit WL 110.

Software for data acquisition

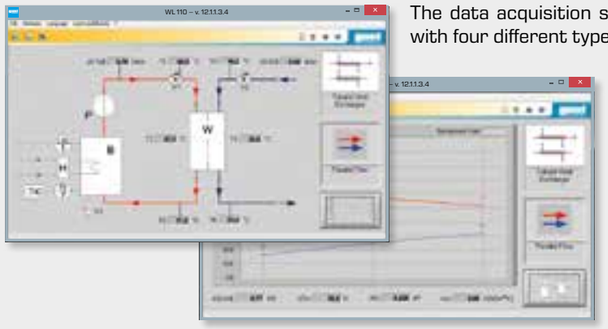

The data acquisition software supports the complete range of experiments with four different types of heat exchangers.

- temperature curves along the heat exchanger
- selectable parallel flow or counterflow operation
- calculation of heat flows
- calculation of mean heat transfer coefficient
- calculation of efficiency

Convenient connection to any computer via USB.

Interchangeable accessories

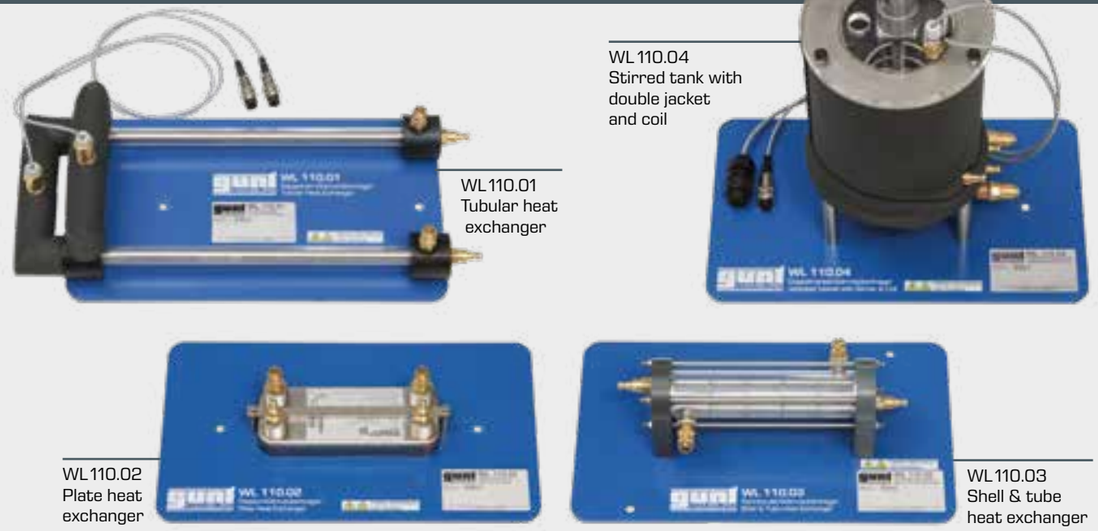

Learning objectives

- function and behaviour during operation of different heat exchangers
- plotting temperature curves
  - in parallel flow operation
  - in counterflow operation
- calculation of mean heat transfer coefficient
- comparing different heat exchanger types

Didactic advantages:
ideally suited for student-centered experiments

A small group of 2 to 3 students can independently and conveniently go through the various experiments.

The lecturer can demonstrate characteristic aspects of heat exchangers in front of a bigger audience when using the data acquisition software and a video projector connected to a PC.

The well-structured instructional material sets out the fundamentals and provides a step-by-step guide through the experiments..

WL 110
Heat exchanger supply unit

Description

- **supply unit for different heat exchangers (WL 110.01-WL 110.04)**
- **heat exchanger operation in parallel flow or counterflow possible**

Heat exchangers transfer thermal energy from the flow of one medium to another. The two flows do not come into direct contact with one another. Efficient heat transfer is a prerequisite for economical processes. Therefore, different heat exchanger types are used in practice depending on the requirements.

This experimental unit can be used to investigate and compare different heat exchanger designs. The complete experimental setup consists of two main elements: WL 110 as supply and control unit and choice of heat exchanger: Tubular heat exchanger (WL 110.01), plate heat exchanger (WL 110.02), shell and tube heat exchanger (WL 110.03) and stirred tank with jacketed vessel and coil (WL 110.04). Water is used as the medium.

The heat exchanger to be investigated is connected to the supply unit. The hot water flows through the heat exchanger. Part of the thermal energy of the hot water is transferred to the cold water.

Reversing the water connections changes the direction of flow and thus allows parallel flow or counterflow operation.

The main function of the WL 110 is to provide the required cold and hot water circuits. To do this, the supply unit is equipped with a heated tank and pump for the hot water circuit, connections for the cold water circuit and a switch cabinet with displays and controls. A temperature controller controls the hot water temperature. The flow rate in the hot water and cold water circuit is adjusted using valves. The cold water circuit can be fed from the laboratory mains or the WL 110.20.

The GUNT software consists of a software for data acquisition and an educational software. With explanatory texts and illustrations the educational software significantly aids the understanding of the theoretical principles. With the aid of an authoring system, the teacher can create further exercises.

Sensors record the temperatures and flow rates. The measured values are read from digital displays and can be transmitted simultaneously via USB directly to a PC where they can be analysed using the software.

Learning objectives/experiments

- in conjunction with a heat exchanger (WL 110.01 to WL 110.04)
  - plotting temperature curves
  - determining the mean heat transfer coefficient
  - comparing different heat exchanger types

WL 110
Heat exchanger supply unit

1 temperature controller, 2 temperature displays, 3 flow rate displays, 4 stirred tank with jacketed vessel and coil WL 110.04, 5 cold water circuit connections, 6 process schematic, 7 hot water tank

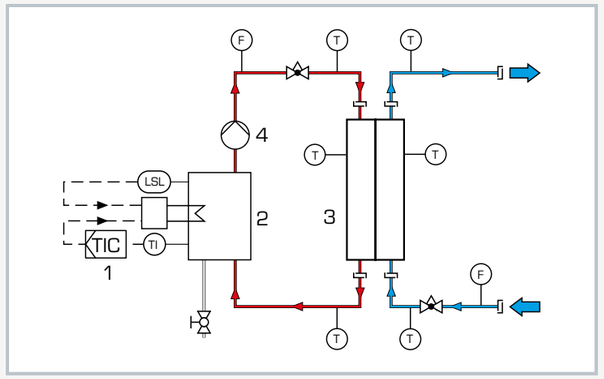

1 temperature controller, 2 heated tank, 3 heat exchanger (WL 110.01 to WL 110.04 accessories), 4 pump; red = hot water circuit, blue = cold water circuit; F flow rate, T temperature

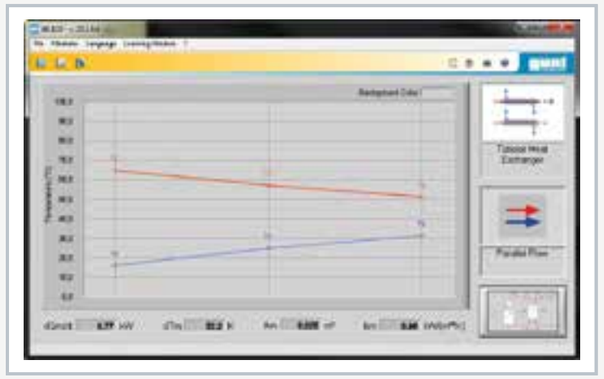

Software screenshot: temperature curve for WL 110.01 in parallel flow operation

Specification

[1] supply unit for heat exchangers
[2] hot water circuit with tank, heater, temperature controller, pump and protection against lack of water
[3] cold water circuit from laboratory mains or water chiller WL 110.20
[4] temperature controller controls the temperature of hot water
[5] flow adjustable using valves
[6] digital displays for 6 temperature and 2 flow rate sensors
[7] water connections with quick-release couplings
[8] stirring machine connection with speed adjustment (WL 110.04)
[9] functions of the GUNT software: educational software and data acquisition
[10] GUNT software for data acquisition via USB under Windows 7, 8.1, 10

Technical data

Pump
- power consumption: 120W
- max. flow rate: 600L/h
- max. head: 30m

Heater
- power output: 3kW
- thermostat: 0...70°C

Hot water tank: approx. 10L

Measuring ranges
- temperature: 6x 0...100°C
- flow rate: 2x 20...250L/h

230V, 50Hz, 1 phase
230V, 60Hz, 1 phase; 230V, 60Hz, 3 phases
UL/CSA optional
LxWxH: 1000x670x550mm
Weight: approx. 60kg

Required for operation

WL 110.20 or cooling water, drain
PC with Windows recommended

Scope of delivery

1 experimental unit
1 CD with authoring system for GUNT educational software
1 GUNT software CD + USB cable
1 set of instructional material

WL 110.01
Tubular heat exchanger

Description

- **tubular heat exchanger for connection to WL 110 supply unit**
- **visible flow channel due to transparent outer tube**

Tubular heat exchangers represent the simplest type of heat exchangers and are the preferred solution for transferring heat with high pressure differences or between high viscosity media (e.g. sludge). An advantage is the uniform flow through the tube space. This space is free of flow dead zones.

The WL 110.01 is part of a series of units enabling experiments to be performed on different heat exchanger types. The experimental unit is ideally suited for investigating the functioning and behaviour of a tubular heat exchanger in operation.

The WL 110.01 is connected to the supply unit WL 110 using quick-release couplings. Hot water flows through the inner tube and cold water through the outer tube. Part of the thermal energy of the hot water is transferred to the cold water. Valves on the supply unit are used to adjust the flow rates of hot and cold water. The supply hose can be reconnected using quick-release couplings, allowing the flow direction to be reversed. This allows parallel flow or counterflow operation. Temperature sensors for measuring the inlet and outlet temperatures are located at the supply connections on the WL 110. There are two additional temperature sensors on the tubular heat exchanger for measuring the temperature after half of the transfer section.

During experiments, temperature curves are plotted and displayed graphically. Additionally, the measured values can be recorded and processed using data acquisition software. The mean heat transfer coefficient is then calculated as a characteristic variable.

Learning objectives/experiments

- in conjunction with WL 110 supply unit
  - function and behaviour during operation of a tubular heat exchanger
  - plotting temperature curves:
    in parallel flow operation
    in counterflow operation
  - calculation of mean heat transfer coefficient
  - comparison with other heat exchanger types

WL 110.01
Tubular heat exchanger

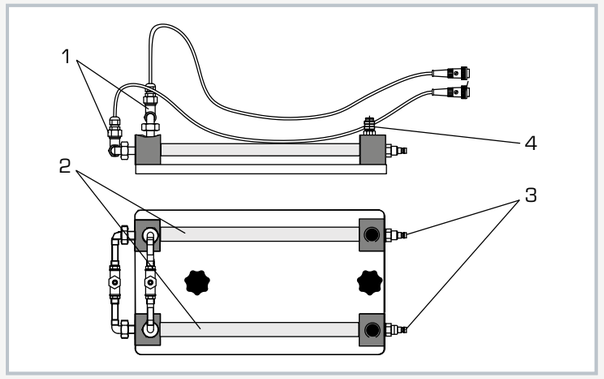

1 temperature sensor, 2 concentric tubes, 3 hot water connections, 4 cold water connections

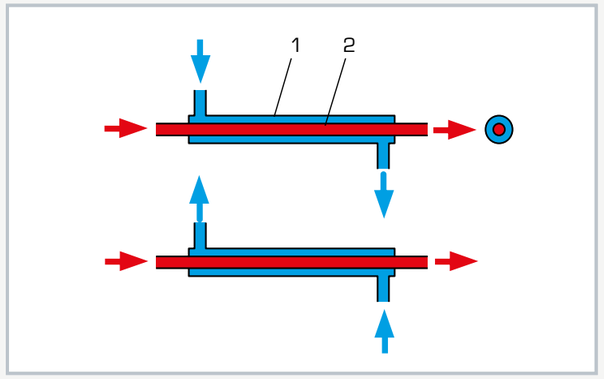

Functional principle of tubular heat exchanger
1 outer tube with cold water, 2 inner tube with hot water; red: hot water, blue: cold water

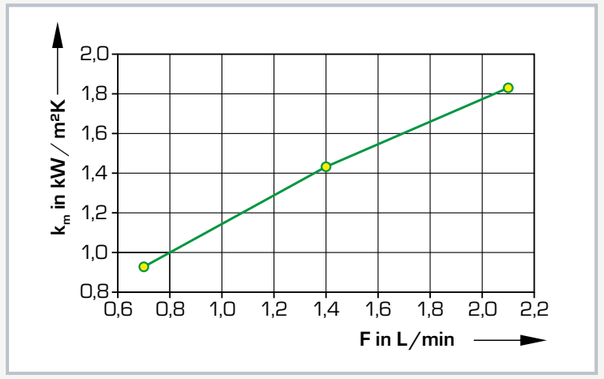

Mean heat transfer coefficient k_m as function of flow rates cold water and hot water

Specification

[1] tubular heat exchanger for connection to WL 110
[2] hot and cold water supply from WL 110
[3] parallel flow and counterflow operation possible
[4] recording of temperature using WL 110 and two additional temperature sensors for measuring the central temperature

Technical data

Heat transfer surfaces
- mean transfer surface: 250cm²

Inner tube, stainless steel
- outer diameter: 12mm
- wall thickness: 1mm

Outer tube, transparent (PMMA)
- outer diameter: 20mm
- wall thickness: 2mm

Measuring ranges
- temperature: 2x 0...100°C

LxWxH: 480x230x150mm
Weight: approx. 4kg

Scope of delivery

1 tubular heat exchanger

WL 110.02
Plate heat exchanger

2E

Description

■ **plate heat exchanger for connection to WL 110 supply unit**

The key feature of plate heat exchangers is their compact design, in which optimum use is made of all of the material for heat transfer. The pressed in profile on the plates creates narrow flow channels, in which significant turbulence occurs. The turbulent flow allows effective heat transfer even with low flow rates and also has a self-cleaning effect. Plate heat exchangers are used in the food industry, offshore technology, refrigeration and domestic engineering.

The WL 110.02 is part of a series of units enabling experiments to be performed on different heat exchanger types. The experimental unit is ideally suited for investigating the functioning and behaviour of a plate heat exchanger in operation.

The WL 110.02 is connected to the supply unit WL 110 using quick-release couplings. The plate heat exchanger is made up of profiled plates with water flowing through the spaces between them. The plates are soldered in such a way that two separate flow channels are formed. These are one "cold" and one "hot" flow channel, in an alternating arrangement. Part of the thermal energy of the hot water is transferred to the cold water. Valves on the supply unit are used to adjust the flow rates of hot and cold water. The supply hose can be reconnected using quick-release couplings, allowing the flow direction to be reversed. This allows parallel flow or counterflow operation. The temperature sensors for measuring the inlet and outlet temperature are located at the supply connections on the WL 110.

During experiments, temperature curves are plotted and displayed graphically. Additionally, the measured values can be recorded and processed using data acquisition software. The mean heat transfer coefficient is then calculated as a characteristic variable.

Learning objectives/experiments

■ in conjunction with WL 110 supply unit
- ▸ function and behaviour during operation of a plate heat exchanger
- ▸ plotting temperature curves:
  in parallel flow operation
  in counterflow operation
- ▸ calculation of mean heat transfer coefficient
- ▸ comparison with other heat exchanger types

WL 110.02
Plate heat exchanger

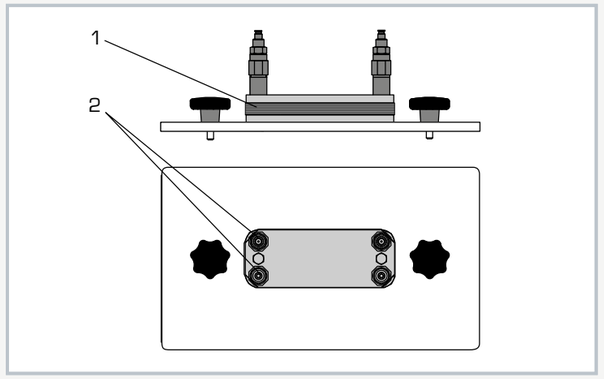

1 plates, 2 water connections

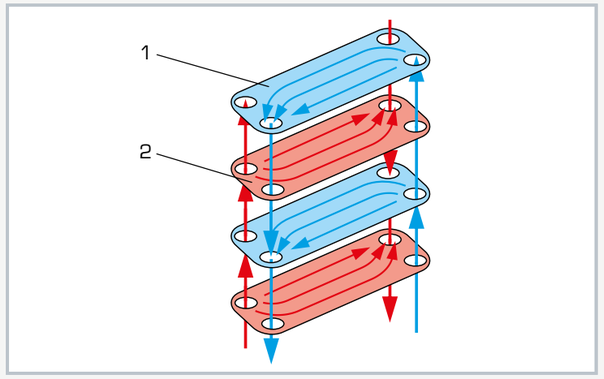

1 plate with cold water, 2 plate with hot water; red: hot water, blue: cold water

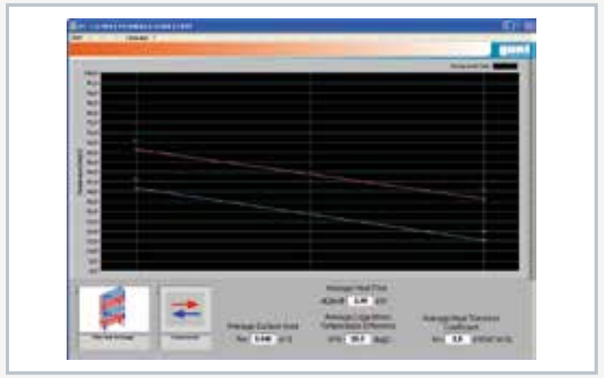

Software screenshot: temperature curve in counterflow operation

Specification

[1] plate heat exchanger for connection to WL 110
[2] hot and cold water supply from WL 110
[3] parallel flow and counterflow operation possible
[4] six soldered plates
[5] recording of temperature using WL 110

Technical data

6 plates, stainless steel
Heat transfer surface: 480cm^2

LxWxH: 400x230x85mm
Weight: approx. 3kg

Scope of delivery

1 plate heat exchanger

WL 110.03
Shell & tube heat exchanger

Description

- **shell and tube heat exchanger for connection to WL 110 supply unit**
- **media flowing in cross-flow**

Shell and tube heat exchangers are in widespread use. The main advantages of this design are the large heat transfer surface and the compact design. Shell and tube heat exchangers are used in the chemical and pharmaceutical industries, in refineries and in process engineering plants.

The WL 110.03 is part of a series of units enabling experiments to be performed on different heat exchanger types. The experimental unit is ideally suited for investigating the functioning and behaviour of a shell and tube heat exchanger in operation.

The WL 110.03 is connected to supply unit WL 110 using quick-release couplings. The shell and tube heat exchanger consists of seven tubes, surrounded by a transparent outer shell. The hot water flows through the tube space and the cold water through the space in the shell. Part of the thermal energy of the hot water is transferred to the cold water. Baffle plates are used to deflect the flow in the shell in such a way as to create greater turbulence and thus a more intensive transfer of heat. The media flows in a cross-flow. Valves on the supply unit are used to adjust the flow rates of hot and cold water. The supply hose can be reconnected using quick-release couplings, allowing the flow direction to be reversed. This allows cross parallel flow or cross counterflow operation. Temperature sensors for measuring the inlet and outlet temperature are located at the supply connections on the WL 110.

During experiments, temperature curves are plotted and displayed graphically. Additionally, the measured values can be recorded and processed using data acquisition software. The mean heat transfer coefficient is then calculated as a characteristic variable.

Learning objectives/experiments

- in conjunction with WL 110 supply unit
  - function and behaviour during operation of shell and tube heat exchanger
  - plotting temperature curves:
    in cross parallel flow operation
    in cross counterflow operation
  - calculation of mean heat transfer coefficient
  - comparison with other heat exchanger types

WL 110.03
Shell & tube heat exchanger

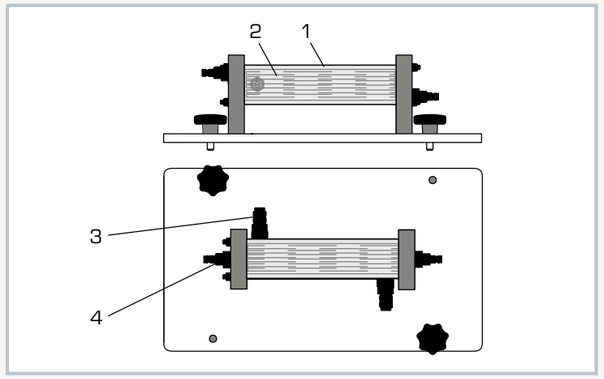

1 transparent shell, 2 tube bundle, 3 shell water connection, 4 tube bundle water connection

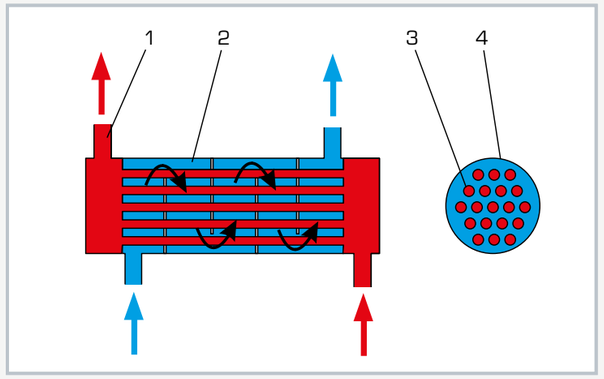

1 hot water, 2 cold water, 3 tube, 4 shell; red: hot water, blue: cold water

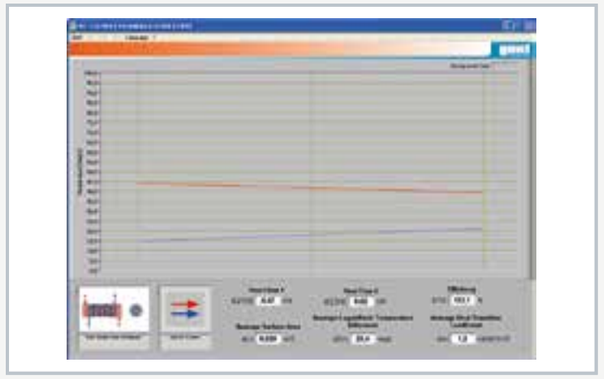

Software screenshot: temperature curve in cross parallel flow operation

Specification

[1] shell and tube heat exchanger (cross-flow) for connection to WL 110
[2] hot and cold water supply from WL 110
[3] cross parallel flow and cross counterflow operation possible
[4] transparent shell, visible tube bundle
[5] tube bundle consisting of 7 tubes and 4 baffle plates
[6] recording of temperature using WL 110

Technical data

Heat transfer surface: 200cm^2
Tube bundle, stainless steel
- outer diameter: 6mm
- wall thickness: 1mm
- tubes, 7

Shell, transparent (PMMA)
- outer diameter: 50mm
- wall thickness: 3mm

LxWxH: 400x230x110mm
Weight: approx. 3kg

Scope of delivery

1 shell and tube heat exchanger

WL 110.04
Stirred tank with double jacket and coil

Description

- **stirred tank with double jacket for connection to WL 110 supply unit**
- **stirrer for improved mixing of medium**
- **heating using jacket or coiled tube**

In many engineering processes, several basic operations are combined. For example, in a tank a chemical reaction takes place during which heat is to be supplied or removed. Such tanks are equipped with jacket or a coiled tube. Depending on the process, the medium in the jacket or in the coiled tubing is used for heating or cooling of the tank content. For a better mixing of the tank content and an even temperature distribution stirring maschines are used. The product temperature at an even temperature distribution is precisely adjustable. Considered here, the stirred tank with double jacket and coil is a model for such tanks.

The WL 110.04 is part of a series of units enabling experiments to be performed on different heat exchanger types. The experimental unit is ideally suited for investigating the functioning and behaviour of a stirred tank with double jacket and coil in operation.

The WL 110.04 is connected to the supply unit WL 110 using quick-release couplings. The jacketed stirred tank is fitted with a coiled tube. In heating mode with jacket the hot water flows through the jacket and transfers a part of the thermal energy to the cold water in the tank. In heating mode with coiled tube the hot water flows through the coil and heats the cold water in the tank. A stirring machine can be used in all modes. Valves on the supply unit are used to adjust the flow rate of hot water.

The temperature sensors for measuring the inlet and outlet temperature are located at the supply connections on the WL 110. An additional temperature sensor measures the temperature in the stirred tank.

During experiments, time curves are plotted and displayed graphically. Aditionally, the measured values can be recorded and processed using data acquisition software.

Learning objectives/experiments

- in conjunction with WL 110 supply unit
  - function and behaviour during operation of a stirred tank with double jacket and coil
  - plotting time curves:
    heating mode with jacket
    heating mode with coiled tube
  - influence of a stirring machine
  - comparison with other heat exchanger types

WL 110.04
Stirred tank with double jacket and coil

1 stirring machine, 2 stirred tank, 3 stirring machine connection, 4 temperature sensor connection, 5 jacket water connection, 6 water outlet and inlet in stirred tank, 7 coiled tube water connection, 8 temperature sensor

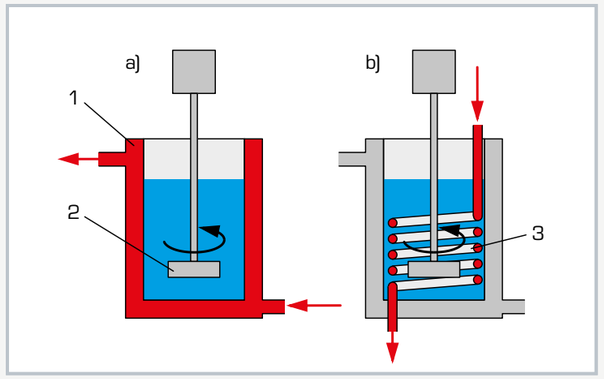

a) heating using jacket: 1 jacket, 2 stirrer
b) heating using coiled tube: 3 coiled tube;
red: hot water, blue: cold water

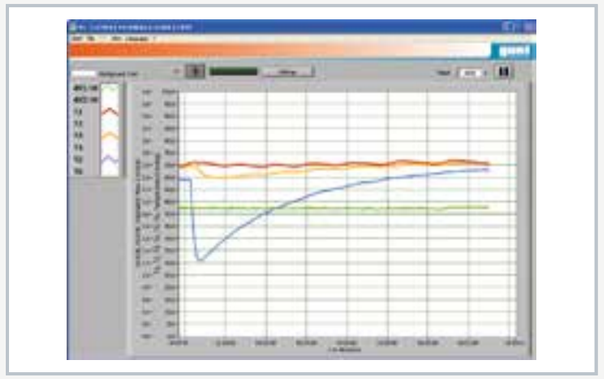

Software screenshot: Time curve for heating using jacket

Specification

[1] stirred tank for connection to WL 110
[2] hot and cold water supply from WL 110
[3] heating using jacket or coiled tube
[4] stirring machine can be used in all modes
[5] speed of stirring machine adjustable using WL 110
[6] visible working area due to transparent cover
[7] recording of temperature using WL 110 and additional temperature sensor for measuring temperature in tank

Technical data

Stirred tank
- nominal capacity: approx. 1200mL

Stirring machine
- speed: 0...330min^{-1}

Heat transfer surface
- jacket (stainless steel): approx. 500cm^2
- coil (stainless steel): approx. 500cm^2

Measuring ranges
- temperature: 0...100°C

LxWxH: 400x230x400mm
Weight: approx. 8kg

Scope of delivery

1 stirred tank

WL 312
Heat transfer in air flow

The base unit and an extensive range of accessories enable comprehensive investigations on heat exchangers, as used in air conditioning and ventilation technology.

- investigation of convective heat transfer in heat exchangers from air conditioning and ventilation technology
- how different pipe surfaces affect the temperature change of the air
- determination of the flow profile in the air duct downstream of the heat exchanger with the vertically movable Pitot tube, the static probe at the air duct and an inclined tube manometer
- determination of the air flow velocity over the measuring nozzle at the inlet into the air duct. The velocity can be set within wide limits via a throttle valve at the blower outlet.
- optional hot and cold water generators (WL 312.10, WL 312.11) allow operation independent of the laboratory network
- optional condensing unit WL 312.12 for use with the direct evaporator WL 312.03

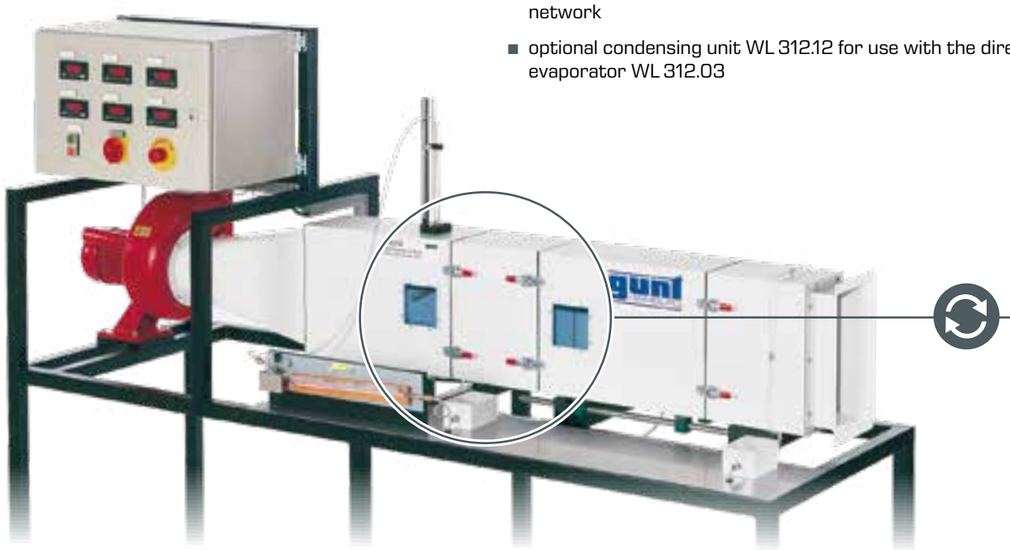

Optional accessories for supplying the heat exchangers

WL 312.10
Hot water generator

The heat exchangers WL 312.01 and WL 312.02 can be supplied from the hot water generator. The heat exchangers then function as air heaters.

WL 312.11
Water chiller

The heat exchangers WL 312.01 and WL 312.02 can be supplied from the cold water generator. The heat exchangers then function as air coolers.

WL 312.12
Condensing unit

The condensing unit is used for air cooling while operating the WL 312.03 direct evaporator.

WL 312 + heat exchangers WL 312.01 – WL 312.03

WL 312.01
Heat transfer with plain tubes

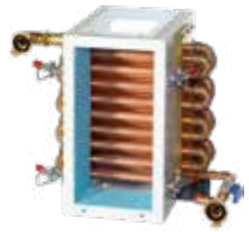

Heat exchangers with **smooth tubes** are used in systems where deposits on the tube must be avoided and fast and effective cleaning is desirable. This **water-to-air heat exchanger** is inserted into the air duct of WL 312 and fixed in place with fasteners. It is connected to the hot or cold water supply via hoses with quick-release couplings. A transparent cover provides a view inside the heat exchanger. The water flows through the tube bundle. The air travels through the heat exchanger in cross flow.

WL 312.02
Heat transfer with finned tubes

Heat exchangers with **finned tubes** are used when optimum heat transfer between gaseous media and liquids is to be achieved and the media must not be contaminated. This **water-to-air heat exchanger** is inserted into the air duct of WL 312 and fixed in place with fasteners. It is connected to the hot or cold water supply via hoses with quick-release couplings.

The tube bundle consists of finned tubes, which are often used in water-air heat exchangers. A transparent cover provides a view inside the heat exchanger. The water flows through the tube bundle. The air travels through the heat exchanger in cross flow.

WL 312.03
Heat transfer on refrigerant evaporator

This device, known as a **direct evaporator**, is inserted into the air duct of WL 312 and fixed in place with fasteners. It is connected to a condensing unit via hoses with quick-release couplings.

The refrigerant evaporates in the tubes and extracts heat from the air. The **tubes** are **ribbed** to increase the heat transfer surface. Again, the transparent cover provides a view inside the evaporator.

Optional accessories

WL 312.10
Hot water generator

or

WL 312.11
Water chiller

WL 312.10
Hot water generator

or

WL 312.11
Water chiller

WL 312.12
Condensing unit

WL 312
Heat transfer in air flow

Description

- **investigation of convective heat transfer together with accessories**

In many industrial production processes, as well as in the air conditioning of buildings, heat transfer takes place with the assistance of air flow. In these cases, convective heat transfer is determined by the temperature differences of the media involved and the flow.

The WL 312 trainer studies convective heat transfer on various pipe surfaces. The flow movement takes place by forced convection.

An insulated air duct with fan serves as the measuring section. A streamlined inlet element and a flow straightener in the air duct provide a homogeneous flow for conducting the experiment. The volumetric flow rate is set via a throttle valve at the fan outlet and measured by a measuring nozzle at the inlet into the air duct.

Heat exchangers with different tube surfaces can be used in the air duct. Heat exchangers with smooth tubes, finned tubes or a refrigerant evaporator are available as accessories.

The air duct includes two windows to observe the experiments.

Combined sensors measure the temperature and relative humidity at the inlet and outlet of the heat exchanger. Pressures upstream and downstream of the measuring section are also recorded in order to determine the pressure loss at the heat exchanger. The velocity distribution in the air duct is measured by a Pitot tube. The temperatures, pressures and relative humidity are displayed digitally.

The following accessories are recommended for supplying the heat exchangers: Hot water generator (WL 312.10), water chiller (WL 312.11) and condensing unit (WL 312.12).

Learning objectives/experiments

- experiments without accessories
  - recording the fan characteristic
  - velocity distribution in the air duct
- experiments with accessories
  - heat transfer with plain tubes (WL 312.01, together with WL 312.10 / WL 312.11)
  - heat transfer with finned tubes (WL 312.02, together with WL 312.10 / WL 312.11)
  - heat transfer on refrigerant evaporator (WL 312.03, together with WL 312.12)

WL 312
Heat transfer in air flow

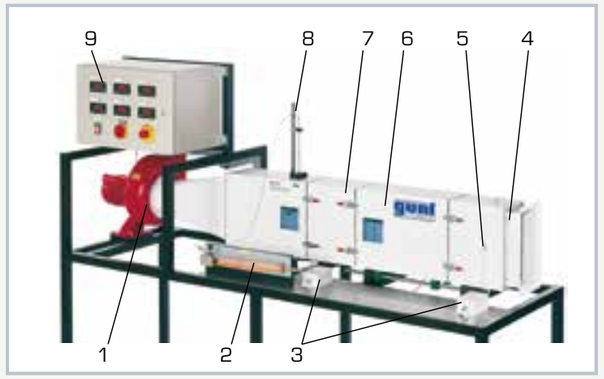

1 fan with throttle valve, 2 inclined tube manometer, 3 differential pressure sensor, 4 streamlined inlet, 5 pressure measurement via measuring nozzle, 6 air duct with windows, 7 measuring section for exchangeable accessories, 8 Pitot tube, 9 displays and controls

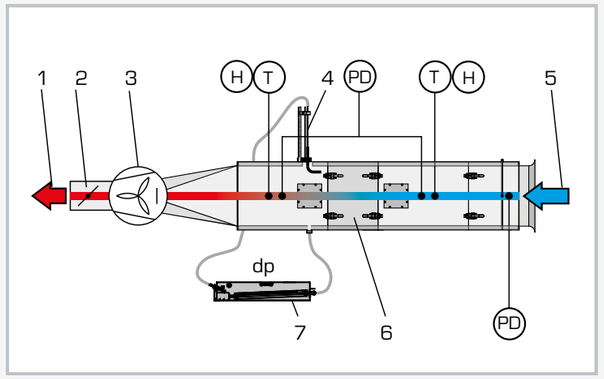

1 air outlet, 2 throttle valve, 3 fan, 4 Pitot tube, 5 air inlet, 6 measuring section for exchangeable accessories, 7 inclined tube manometer;
H humidity, T temperature, dp differential pressure, PD differential pressure sensor

Accessories for the trainer:
WL 312.01 Heat transfer with plain tubes
WL 312.02 Heat transfer with finned tubes
WL 312.03 Heat transfer on refrigerant evaporator

Specification

[1] air duct for studying heat transfer in air flows
[2] insulated air duct with flow straightener and streamlined inlet
[3] determination of the volumetric flow rate of the air via differential pressure at the measuring nozzle
[4] fan with adjustable flow rate
[5] movable Pitot tube with inclined tube manometer for measuring velocity distributions
[6] combined temperature and humidity sensor
[7] digital displays of differential pressure, temperature and relative air humidity
[8] various heat exchangers available as accessories

Technical data

Air duct cross-section: 150x300mm

Fan
- output: 1100W
- max. flow rate: 1680m^3/h
- max. pressure difference: 1000Pa
- rated speed: 2800min^{-1}
- air velocity: max. 10m/s

Pitot tube: travel 300mm

Measuring ranges
- temperature: 2x 0...50°C
- humidity: 2x 0...100%
- differential pressure: 1x 0...100Pa

230V, 50Hz, 1 phase
230V, 60Hz, 1 phase; 120V, 60Hz, 1 phase
UL/CSA optional
LxWxH: 2350x750x1800mm
Weight: approx. 150kg

Scope of delivery

1 trainer
1 set of accessories
1 set of instructional material

WL 315C
Comparison of various heat exchangers

The WL 315C trainer is used to study and compare different types of heat exchanger under experimental conditions. The most widespread design is the shell & tube heat exchanger, which is included here as double-tube and shell & tube heat exchangers. The plate heat exchanger is an equally frequently used design. One special design is the stirred tank with double jacket and coiled tube. In the model used here, hot water can flow through either the outer jacket or the inner coiled tube. The finned tube heat exchanger is a typical example of heat transfer between a liquid and a gaseous medium.

The types presented here are indirect heat exchangers, in which the material flows are conducted in parallel flow, counterflow or, in the case of the finned tube heat exchanger, in cross flow.

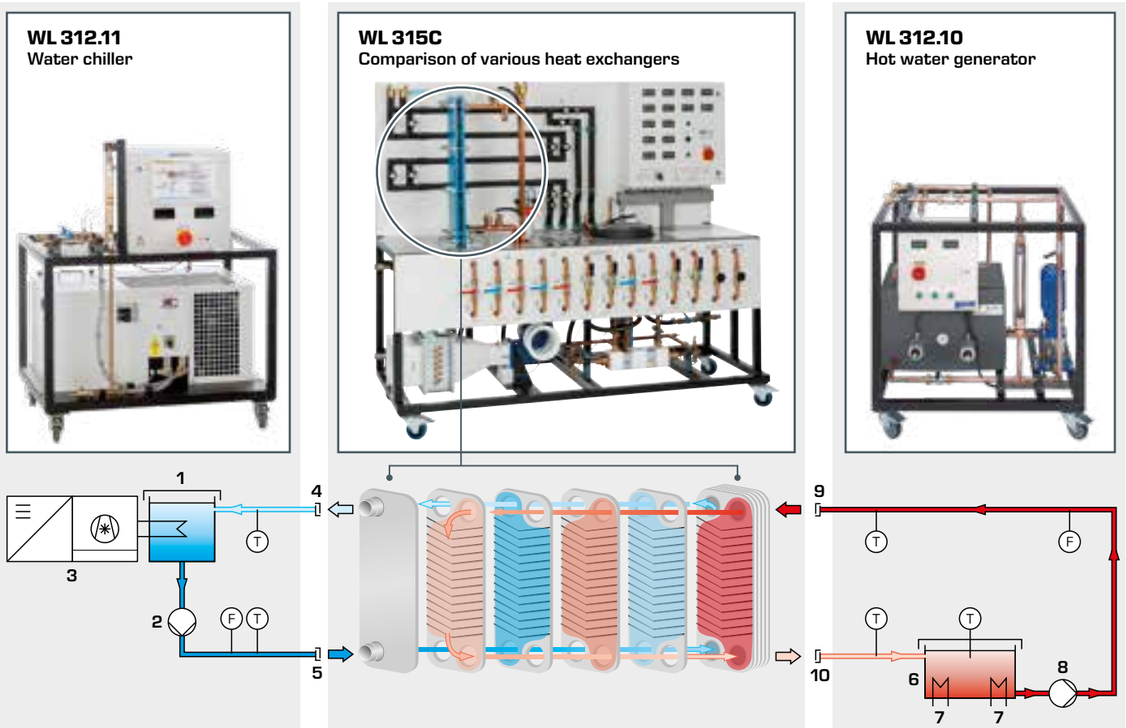

WL 312.11 Water chiller

1 water tank, **2** pump,
3 cold water set,
4+**5** connections to WL 315C;
T temperature measurement point,
F flow meter

WL 315C

Trainer with five different heat exchangers.
The plate heat exchanger is shown as an example.

WL 312.10 Hot water generator

6 water tank,
7 heater, **8** pump,
9+**10** connections to WL 315C;
T temp. measurement point,
F flow meter

The accessories WL 312.11 Water chiller and WL 312.10 Hot water generator supply cold and hot water for the experiments independent of the laboratory supply. This means that the trainer can be operated as a stand-alone system with a closed water circuit.

WL 312.11 Water chiller
The water chiller enables meaningful operation at high ambient and water temperatures. The device is equipped with a closed refrigeration system, a water tank and a circulation pump.

WL 312.10 Hot water generator
The hot water generator provides hot water for the experiments. The device contains a water tank with two heaters and a pump that transports the heated water to the trainer. The water tank is equipped with two sight glasses to check the fill level.

Overview of the heat exchangers supplied

Type	Principle of operation	Operating mode	Media
Tubular heat exchanger	Two tubes carry media at different temperatures 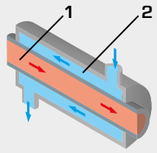 **1** inner tube with hot water, **2** outer tube with cold water	parallel or counterflow	water-water
Shell & tube heat exchanger	A tube bundle, enclosed in a tube or housing, both of which carry media at different temperatures 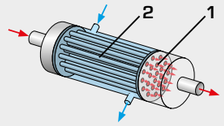 **1** tube bundle with hot water, **2** jacket tube with cold water	parallel or counterflow	water-water
Plate heat exchanger	A pack of embossed plates in which media with different temperatures are carried alternately 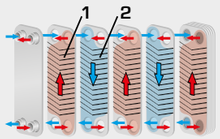 **1** embossed plate red: flow chamber for hot water, **2** embossed plate blue: flow chamber for cold water	parallel or counterflow	water-water
Stirred tank with double jacket and coiled tube	Stirred tank with flow-through jacket or coiled tube, media in the stirred tank and jacket/coiled tube have different temperatures 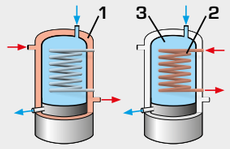 **1** jacket, through which hot water flows, **2** coiled tube, through which hot water flows, **3** stirred tank, filled with cold water	heated jacket or heated coiled tube	water-water
Finned tube heat exchanger	Pack of tubes with pressed-on fins through which air flows, medium in the tube and the air have different temperatures 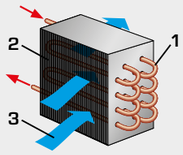 **1** tubes, through which hot water flows, **2** fins on the tubes provide a larger heat transfer surface area, **3** cold air flows through the fins	cross parallel flow or cross counterflow	water-air

GUNT software for data acquisition

The GUNT software supports the range of experiments with the various types of heat exchanger: it displays temperature curves and calculates heat fluxes and mean overall heat transfer coefficients.

WL 315C
Comparison of various heat exchangers

Description

- **use of industrial components**
- **five different heat exchangers in comparison**
- **adjustment of operating modes and selection of heat exchangers clearly arranged on the front panel**

In practice, different types of heat exchanger are used depending on requirements in order to ensure efficient heat transfer and avoid losses.

The WL 315C trainer is used to study and compare five different heat exchangers. Both parallel flow and counterflow operation are demonstrated, with their different temperature curves.

In the plate, tubular and shell & tube heat exchangers, heat is transferred between hot and cold water in tubes or between plates. In the finned tube heat exchanger, the air flows around pipes with hot water in crossflow.

In the stirred tank with double jacket and coiled tube, either the outer jacket or the inner coiled tube can be filled with hot water.

A stirring machine ensures that the water inside the tank is mixed to achieve an even heat distribution.

The air volume flow for studying the finned tube heat exchanger is adjusted via a throttle valve at the fan outlet. Valves are used to switch between parallel flow and counterflow. The flow rate in the hot water or cold water circuit can also be adjusted by means of valves.

The air volume flow is measured with a fixed differential pressure sensor. The water pressure can be measured at different points using a portable differential pressure sensor. Temperatures and flow rates are also measured. The measured values are read from digital displays and can be transmitted simultaneously via USB directly to a PC where they can be analysed using the software included.

Hot and cold water is supplied either from the laboratory network or by means of the accessories WL 312.10 hot water generator and WL 312.11 water chiller.

Learning objectives/experiments

- familiarisation with heat transfer processes
  - heat transfer
  - heat conduction
- determination of the heat transfer coefficient
- creation of temperature curves for the different heat exchangers
  - parallel flow
  - counterflow
  - cross parallel flow
  - cross counterflow
- comparison of the different heat exchangers between each other
  - plate heat exchanger
  - tubular heat exchanger
  - shell & tube heat exchanger
  - finned tube heat exchanger
  - stirred tank with double jacket and coiled tube

WL 315C
Comparison of various heat exchangers

1 bleed valve, 2 tubular heat exchanger, 3 temperature sensor, 4 plate heat exchanger, 5 air duct, 6 finned tube heat exchanger, 7 shell & tube heat exchanger, 8 fan, 9 adjustable fittings, 10 stirred tank with double jacket and coiled tube, 11 pressure sensor (water), 12 switch cabinet

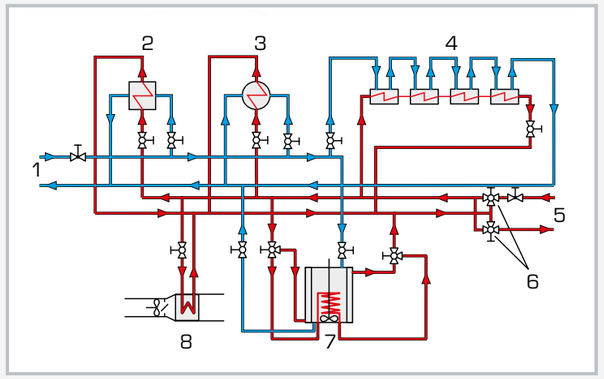

1 cold water connection (laboratory or via WL 312.11), 2 shell & tube heat exchanger, 3 plate heat exchanger, 4 tubular heat exchanger, 5 hot water connection (laboratory or via WL 312.10), 6 valves for setting the operating mode, 7 stirred tank with double jacket and coiled tube, 8 finned tube heat exchanger

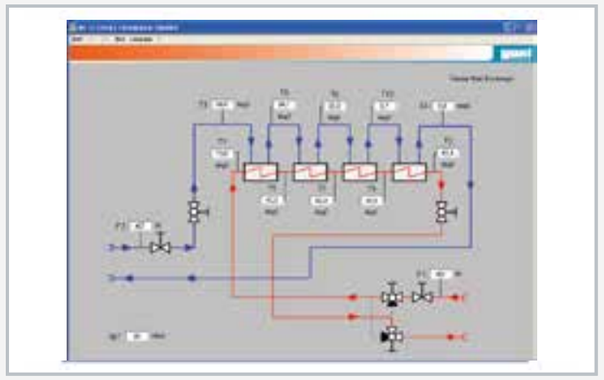

Software screenshot: process schematic of the tubular heat exchanger

Specification

[1] investigation and comparison of five different heat exchanger types
[2] parallel flow or counterflow can be set via valves
[3] flow rates can be adjusted via valves
[4] electromagnetic flow meter for hot and cold water
[5] portable differential pressure sensor for water
[6] fixed differential pressure sensor for air, to determine the volumetric flow rate
[7] digital displays for temperature, pressure differences and flow rate
[8] hot water generator and water chiller available (WL 312.10 and WL 312.11)
[9] GUNT software for data acquisition via USB under Windows 7, 8.1, 10

Technical data

Plate heat exchanger, (water-water)
- number of plates: 10
- heat transfer area: approx. 0,26m^2
- output: 15kW

Tubular heat exchanger (water-water)
- heat transfer area: 0,1m^2

Shell & tube heat exchanger (water-water)
- output: 13kW

Finned tube heat exchanger (water-air)
- heat transfer area: approx. 2,8m^2
- fan max. flow rate: 780m^3/h
- fan max. pressure difference: 430Pa

Stirred tank with double jacket and coiled tube (water-water)
- double jacket heat transfer area: 0,16m^2
- coiled tube heat transfer area: 0,17m^2

Measuring ranges
- differential pressure:
  - 1x 0...10mbar (air)
  - 1x 0...1000mbar (water)
- flow rate: 2x 0...3m^3/h
- temperature: 10x 0...100°C

230V, 50Hz, 1 phase
230V, 60Hz, 1 phase; 120V, 60Hz, 1 phase
UL/CSA optional
LxWxH: 2010x800x1760mm
Weight: approx. 250kg

Required for operation

cold and hot water connection: 400L/h, drain
PC with Windows recommended

Scope of delivery

1 trainer
1 GUNT software CD + USB cable
1 set of instructional material

WL 320
Wet cooling tower

With interchangeable cooling columns the wet cooling tower WL 320 is used for basic experiments as well as comparative measurements in different types of cooling columns. Thus the key properties of the wet cooling tower can be traced in the experiment.

WL 320 Wet cooling tower

Additional cooling columns for comparative measurements

WL 320.01
Cooling column type 2
small surface

WL 320.02
Cooling column type 3
large surface

WL 320.03
Cooling column type 4
empty for wet deck surfaces of your own design

WL 320.04
Cooling column type 5
variable wet deck surfaces

Interchangeable cooling columns

Five different cooling columns are available

- three cooling columns with different wet deck surfaces
- one cooling column without wet deck surfaces for investigating the heat transfer in the free water drop or for own wet deck surfaces
- one cooling column with divided wet deck surfaces so that the surface of the wet deck surfaces can be varied and the distribution of the temperature and humidity within the cooling column is measured

How does a cooling tower work?

Cooling towers are used to dissipate heat arising during thermal processes, e.g. in steam power plants, air conditioning systems and process chillers. A difference is made between dry and wet cooling towers. Wet cooling towers can be constructed more easily and smaller for the same capacity. However, they feature high water losses in the range of 1...2,5% of the cooling water volume.

WL 320 is a wet cooling tower. The water to be cooled comes into direct contact with the air. The hot water is sprayed at the top of the cooling tower, trickles down the wet deck surface and is cooled in the process. The cooled water is removed at the bottom. The air enters the cooling tower from the bottom, flows upwards in a counterflow along the water trickling down, and exits at the top end.

A difference is made between cooling towers with atmospheric and forced ventilation. Very large cooling towers utilise the principle of atmospheric ventilation. Here the difference in density between the air inside and outside the cooling tower ensures the movement of the air. In small cooling towers the difference in density is insufficient for adequate air movement; they are forcefully ventilated by a fan.

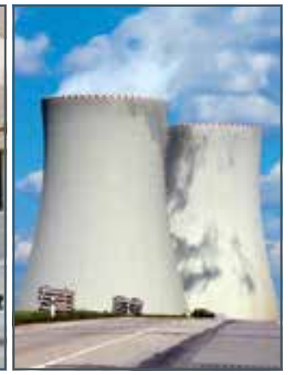

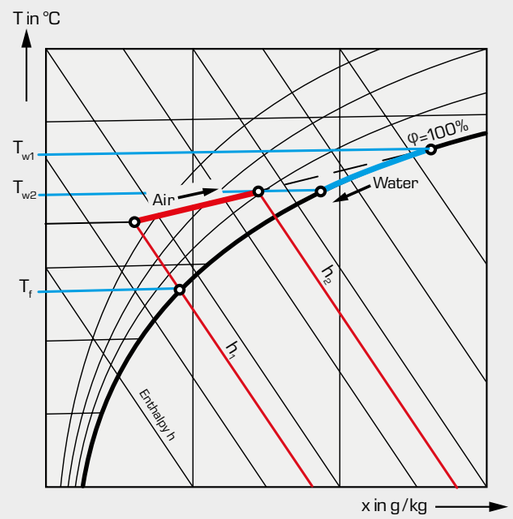

Representation of the changes of state of air and water in the cooling tower in the h-x diagram

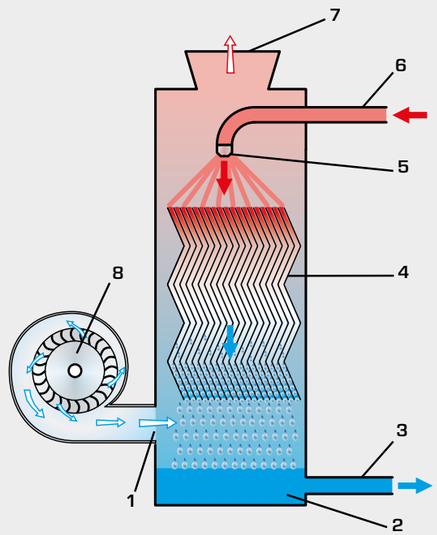

Principle of a wet cooling tower with forced ventilation

1 air inlet, **2** drip pan, **3** cold water outlet, **4** wet deck surface, **5** water distribution nozzle, **6** hot water inlet, **7** air outlet, **8** fan

There are two types of heat transfer in a wet cooling tower. First the heat is transferred by convection directly from the water to the air. In addition the water cools by partial evaporation. Decisive for the good operation of a wet cooling tower is that the air does not contain too much humidity. Therefore the water temperature T_{w2} must be clearly above the saturation temperature (wet bulb temperature) T_f of the air.

WL 320
Wet cooling tower

Description

- **principle and characteristic variables of a wet cooling tower with forced ventilation**
- **transparent, easily interchangeable cooling column with wet deck surface**
- **4 additional cooling columns available as accessory**

Wet cooling towers are a proven method of closed-circuit cooling and heat dissipation. Typical areas of application are: air conditioning, heavy industry and power plants.

In wet cooling towers the water to be cooled is sprayed over a wet deck surface. Water and air come into direct contact in the counterflow. The water is cooled by convection. Some of the water evaporates and the evaporation heat removed further cools down the water.

WL 320 examines the main components and principle of a wet cooling tower with forced ventilation. Water is heated in a tank and transported by a pump to an atomiser. The atomiser sprays the water to be cooled over the wet deck surface. The water trickles from the top to the bottom along the wet deck surface whilst air flows from the bottom to the top. The heat is transferred directly from the water to the air by convection and evaporation.

The evaporated water volume is recorded. The air flow is generated by a fan and adjusted using a throttle valve.

The cooling column is transparent allowing clear observation of the wet deck surface and the trickling water. Interchangeable cooling columns (WL 320.01 – WL 320.04) enable comparative studies.GUNT software for data acquisition via USB under Windows 7, 8.1, 10

All important process parameters are recorded (volumetric air flow rate, temperatures of air and water, air humidity, water flow rate). The measured values can be read on digital displays. At the same time, the measured values can also be transmitted directly to a PC via USB. The data acquisition software is included. The changes of state of the air are represented in an h-x diagram.

Learning objectives/experiments

- thermodynamic principles of the wet cooling tower
- changes of state of the air in the h-x diagram
- determination of the cooling capacity
- energy balances
- calculation of process parameters, such as maximum cooling distance, cooling zone width etc.
- in conjunction with the cooling columns WL 320.01-WL 320.04
  - comparison of different wet deck surfaces

WL 320
Wet cooling tower

1 nozzle as atomiser, 2 wet deck surface, 3 displays and controls, 4 air chamber, 5 fan with throttle valve, 6 pump, 7 tank with heating, 8 tank for additional water, 9 combined temperature/humidity sensor

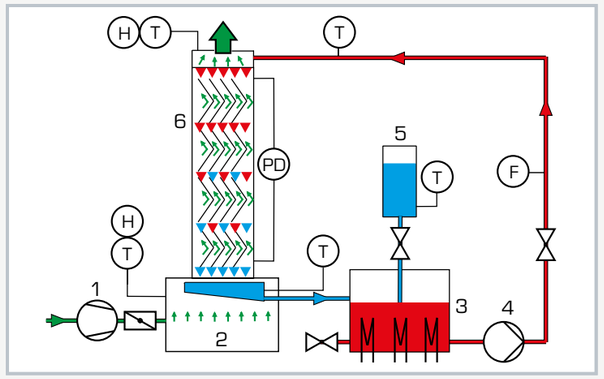

1 fan, 2 air chamber, 3 tank with heater, 4 pump, 5 tank for additional water, 6 cooling column with wet deck surface; T temperature, H humidity, dp differential pressure, F water flow rate

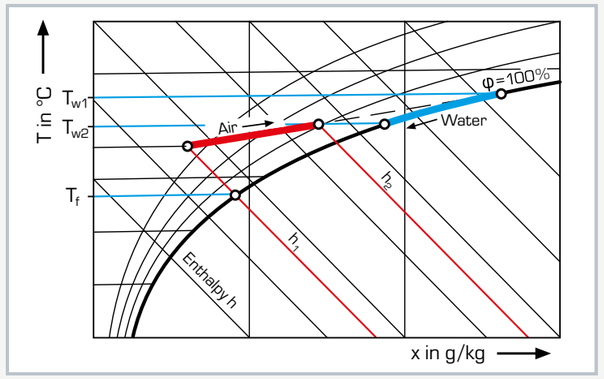

Changes of state of air and water in the h-x diagram as online representation in the software

Specification

[1] principle of a wet cooling tower with cooling column and forced ventilation
[2] interchangeable cooling columns with different wet deck surfaces available as accessories
[3] water circuit with pump, filter, valve and a nozzle as atomiser
[4] three-stage heater with thermostat for water heating
[5] radial fan for forced ventilation
[6] throttle valve to adjust the air flow
[7] demister unit at the outlet of the cooling columns minimises water loss
[8] tank for additional water compensates for water loss
[9] display of temperature, differential pressure, flow rate and humidity
[10] GUNT software for data acquisition via USB under Windows 7, 8.1, 10

Technical data

Cooling column
- specific surface of the wet deck surface: 110m²/m³
- cross-section: 150x150mm

Volumetric air flow measurement via orifice: Ø 80mm
Heater, adjustable in three stages:
- 500W
- 1000W
- 1500W

Thermostat: switches off at 50°C
Fan
- power consumption: 250W
- max. pressure difference: 430Pa
- max. volumetric flow rate: 13m³/min

Pump
- max. head: 70m
- max. flow rate: 100L/h

Tank for additional water: 4,2L

Measuring ranges
- differential pressure: (air): 0...1000Pa
- flow rate: (water): 12...360L/h
- temperature: 2x 0...50°C, 3x 0...100°C
- air humidity: 10...100% r.h.

230V, 50Hz, 1 phase
230V, 60Hz, 1 phase; 230V, 60Hz, 3 phases
UL/CSA optional
LxWxH: 1100x470x1230mm
Weight: approx. 120kg

Required for operation

PC with Windows recommended

Scope of delivery

1 trainer
1 cooling column type 1
1 GUNT software CD + USB cable
1 set of instructional material

WL 225
Heat transfer in the fluidised bed

Description

- **fluidised bed formation with air in a glass reactor**
- **illuminated glass reactor for optimal observation of the fluidisation process**

Fluidised beds are used in a broad range of applications, e.g. for industrial drying, fluidised bed combustion or heat treatment of materials. Bulk solids are transformed from a fixed bed into a fluidised bed when fluids pass through them. In terms of fluid mechanical and thermodynamic properties, the fluidised bed behaves like an incompressible fluid.

The heat transfer between hot fluid and a fixed bed occurs mainly through heat conduction. Due to the movement of the particles, the fluid and the particles are very well mixed in the fluidised bed. This enables optimum heat transfer between fluid and particles and ensures an even temperature distribution in the reactor.

The core element in WL 225 is a backlit glass reactor which enables students to observe the fluidisation process. Compressed air flows upwards through a porous sintered-metal plate. On the sintered-metal plate is a fixed bed. If the velocity of the air is less than the so-called fluidisation velocity, the flow merely passes through the fixed bed.

At higher velocities the bed is loosened to such an extent that individual solid particles are suspended by the fluid and form a fluidised bed. The air escapes through a filter at the top end of the glass reactor.

The air flow rate is set via a valve and measured with a flow meter. The pressure at the inlet into the reactor and in the fluidised bed is also measured.

A submersible heating element in the reactor enables examination of the heat transfer in the fluidised bed. Temperatures are measured by sensors at the air inlet of the reactor, on the surface of the heating element and in the fluidised bed and digitally displayed. The power output of the heating element is also digitally displayed. Aluminium oxide in various particle sizes is included in the scope of delivery as bulk solid.

Learning objectives/experiments

- basic information on the fluidisation of fixed beds
- pressure curve within the bed
- pressure losses depending on
  - flow velocity
  - particle size of the bulk solid
- determination of the fluidisation velocity

- heat transfer in the fluidised bed
  - influence of the air flow rate on the heat transfer
  - influence of the heater position
  - influence of the particle size
  - determination of the heat transfer coefficient

WL 225
Heat transfer in the fluidised bed

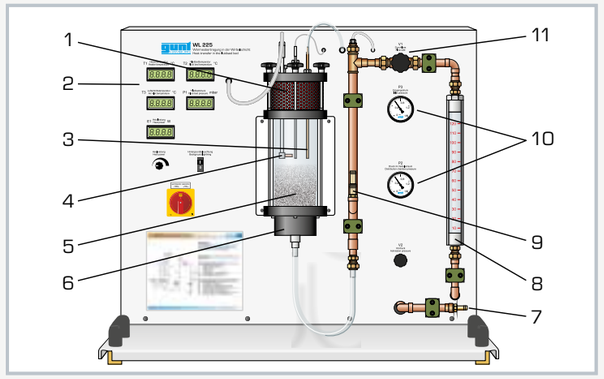

1 air filter, 2 display and control panel, 3 fluidised bed pressure sensor, 4 heater element, 5 reactor with fluidised bed, 6 reactor base made of sintered metal, with distribution chamber, 7 compressed air connection, 8 flow meter, 9 safety valve, 10 manometer, 11 valve for adjusting the air flow rate

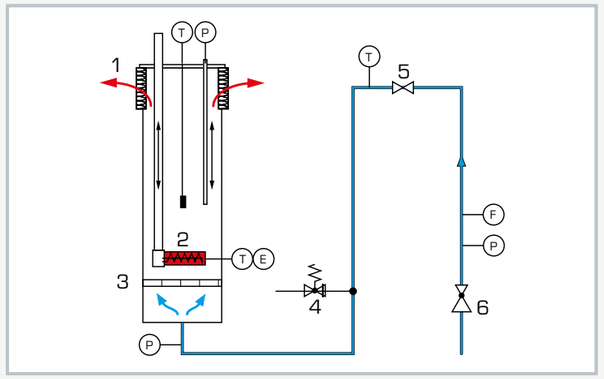

1 air filter, 2 moveable heating element, 3 sintered-metal plate, 4 safety valve, 5 valve for adjusting the air flow rate, 6 pressure reducing valve, E power output, F flow rate, T temperature

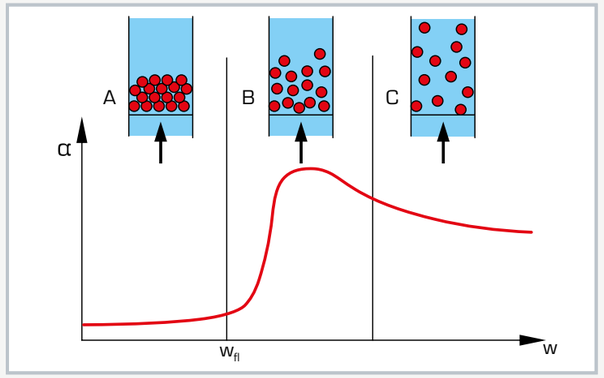

Dependency of the heat transfer coefficient α on the flow velocity w: A fixed bed, B fluidised bed, C sediment discharge, w_{fl} fluidisation velocity

Specification

[1] examination of the fluidised bed formation and the heat transfer in the fluidised bed
[2] fluidised bed of compressed air and aluminium oxide, particle sizes either 100µm or 250µm
[3] glass reactor, backlit
[4] glass reactor with sintered-metal plate at the inlet and air filter at the outlet
[5] heating element, submersible and with adjustable power output
[6] manual setting of the air flow rate via valve and flow meter
[7] instrumentation: temperature sensors at heater, air inlet, in fluidised bed, pressure measurement upstream of the reactor and in the reactor (manometer, pressure sensor), flow meter for measuring the air flow rate, power output of the heating element
[8] digital displays for temperatures, power output, pressure in the fluidised bed
[9] steel rulers for measuring the immersion depth of the heating element and the height of the fluidised bed
[10] safety valve, temperature switch at the heater, air filter at the outlet

Technical data

Glass reactor
- capacity: 2150mL
- filling volume: approx. 1000mL
- operating pressure: 500mbar

Heating element
- power: 0...100W

Measuring ranges
- temperature: 1x 0...100°C, 2x 0...400°C
- flow rate: 0...6,5Nm^3/h
- pressure: 1x 0...25mbar, 2x 0...1600mbar
- power: 0...200W

230V, 50Hz, 1 phase
230V, 60Hz, 1 phase; 120V, 60Hz, 1 phase
UL/CSA optional
LxWxH: 910x560x800mm
Weight: approx. 65kg

Required for operation

Compressed air connection: min. 2bar

Scope of delivery

1 experimental unit
2kg aluminium oxide, 100µm
2kg aluminium oxide, 250µm
1 steel ruler
1 hose
1 set of instructional material

3

Thermal fluid energy machines

Introduction

Overview Thermal fluid energy machines 112

Steam power plants

Basic knowledge Steam power plants 114
ET 860 Safety devices on steam boilers 116
ET 805.50 Determination of the vapour content 118
Overview ET 805 – ET 851 GUNT Steam power plants 120
ET 810 Steam power plant with steam engine 122
Overview ET 813 + ET 813.01 + HM 365 Steam power plant with two-cylinder steam engine 124
ET 813 Two-cylinder steam engine 126
Overview ET 850 + ET 851 Laboratory scale steam power plant 128
ET 850 Steam generator 130
ET 851 Axial steam turbine 132
ET 830 Steam power plant, 1,5 kW 134
Overview ET 833 Steam power plant 1,5 kW with process control system 136
ET 833 Steam power plant 1,5 kW with process control system 138
ET 805 Steam power plant 20 kW with process control system 140

Gas turbines

Basic knowledge Gas turbines 142
ET 792 Gas turbine 144
ET 795 Simulation of a gas turbine 146
ET 794 Gas turbine with power turbine 148
ET 796 Gas turbine jet engine 150

Piston compressors

Basic knowledge Compressors 152
ET 500 Two-stage piston compressor 154
ET 513 Single-stage piston compressor 156
ET 432 Behaviour of a piston compressor 158
ET 508 Simulation of a two-stage air compressor 160
ET 512 Compressed air generation plant with piston compressor 162

Internal combustion engines

Basic knowledge Internal combustion engines 164
Overview Test stands for internal combustion engines 166
Overview CT 159 Modular test stand for single-cylinder engines, 2,2 kW 168
CT 150 Four-stroke petrol engine for CT 159 170
CT 151 Four-stroke diesel engine for CT 159 171
CT 152 Four-stroke petrol engine with variable compression for CT 159 172
CT 153 Two-stroke petrol engine for CT 159 173
CT 159 Modular test stand for single-cylinder engines, 2,2 kW 174
Overview CT 110 Test stand for single-cylinder engines, 7,5 kW 176
CT 100.20 Four-stroke petrol engine for CT 110 178
CT 100.21 Two-stroke petrol engine for CT 110 179
CT 100.22 Four-stroke diesel engine for CT 110 180
CT 100.23 Water-cooled four-stroke diesel engine for CT 110 181
CT 110 Test stand for single-cylinder engines, 7,5 kW 182
Overview CT 300 Test stand for two-cylinder engines, 11 kW 184
CT 300.04 Two-cylinder petrol engine for CT 300 186
CT 300.05 Two-cylinder diesel engine for CT 300 187
CT 300 Engine test stand, 11 kW 188
Overview CT 400 Test stand for four-cylinder engines, 75 kW 190
CT 400.01 Four-cylinder petrol engine for CT 400 192
CT 400.02 Four-cylinder diesel engine for CT 400 194
CT 400 Load unit, 75 kW, for four-cylinder engines 196

Thermal fluid energy machines

Classification of thermal fluid machinery

The characteristic feature used to differentiate between thermal and hydraulic fluid energy machines is the change in density.

- **thermal fluid energy machines:** variable density of the fluid
- **hydraulic fluid energy machines:** constant density

Thermal fluid energy machines: variable density of the fluid

Driven machines
Energy is added to the fluid

Turbomachines
Transfer of energy between the fluid and the machine by means of flow forces

- fan
- ventilator
- radial compressor

Positive displacement machines
Transfer of energy between the fluid and the machine by means of a variable volume, generated by a displacement device

- piston compressor
- screw compressor
- vane compressor

Driving machines
Energy is removed from the fluid

Turbomachines
Transfer of energy between the fluid and the machine by means of flow forces

- wind turbine
- steam turbine
- gas turbine
- jet engine

Positive displacement machines
Transfer of energy between the fluid and the machine by means of a variable volume, generated by a displacement device

- internal combustion engine
- steam engine
- Stirling engine
- gas expansion engine

The table below shows an extract from a typical curriculum of a technical university. The syllabus for the lecture on **thermal fluid energy machines** looks similar to this. Depending on focus, the syllabus can be modified in line with the classification of the fluid machinery. The GUNT devices cover most of these topics.

Thermal driving machines	GUNT products
Thermal engines	
Steam turbines	ET 805, ET 830, ET 833, ET 851
Action turbine	ET 851, HM 270 (catalogue 4a)
Reaction turbine	HM 272 (catalogue 4a)
Steam power plant	ET 805, ET 810, ET 813, ET 830, ET 833, ET 850/851
Gas turbines	ET 792 – ET 796
Setup with compressor/combustion chamber	ET 792
Gas turbine power plant	ET 795
Turbine as expansion machine	ET 792 – ET 796
Internal combustion engines	series CT 159, series CT 100, series CT 300, series CT 400
Petrol engine (four stroke)	CT 100.20, CT 150, CT 152, CT 300.04
Diesel engine (four stroke)	CT 100.22, CT 100.23, CT 151, CT 300.05, CT 400.02
Two-stroke principle	CT 100.21, CT 153
Thermal driven machines	**GUNT products**
Compressors	
Piston compressor	ET 432, ET 500, ET 508, ET 513, HM 299 (catalogue 4a)
Rotary compressor	HM 299 (catalogue 4a)
Radial compressor	HM 292 (catalogue 4a)

Basic knowledge

Steam power plants

Steam power plants play a key role in supplying electrical energy. In addition to electricity production, some steam power plants use part of the heat generated to supply district heating. This is why the Rankine steam cycle is still one of the most important industrially used cyclic processes today.

In a steam power plant, a steam turbine – driven by steam – generates mechanical energy. A generator then converts this mechanical energy into electrical energy. The steam required can be generated from nuclear energy, fossil fuels, solar energy or geothermal energy, for example.

Thanks to optimised processes, it has been possible to continuously improve the efficiency of electrical energy generation over the past years. Today, a total efficiency of almost 45% has been achieved.

Steam power plants essentially have the same design:

Heat source	Steam generator	Turbine with generator	Cooling

The following types of steam power plants are distinguished according to the heat source that provides the thermal energy:

Nuclear power plant

Coal-fired power plant

Oil-fired power plant

Rarely exclusive use of oil, mostly as an additive to coal.

Solar thermal power plant

Gas and steam turbine power plant

Theoretical fundamentals of the cyclic process of a steam power plant

Rankine cycle

The Rankine cyclic process is used to assess, evaluate and compare steam power plants. This thermodynamic cyclic process describes the conversion of thermal energy into mechanical energy and vice versa. As with all thermodynamic cycles, it cannot exceed the efficiency of the corresponding Carnot process.

In steam power plants, first the thermal energy of a working medium (usually water but also ammonia, for example) is converted into mechanical energy. To this end, the working medium is alternately condensed at low pressure and evaporated at high pressure. The pressure is applied by the feed pump through expending work and reduced in the turbine while releasing work. The working medium is carried in a closed circuit.

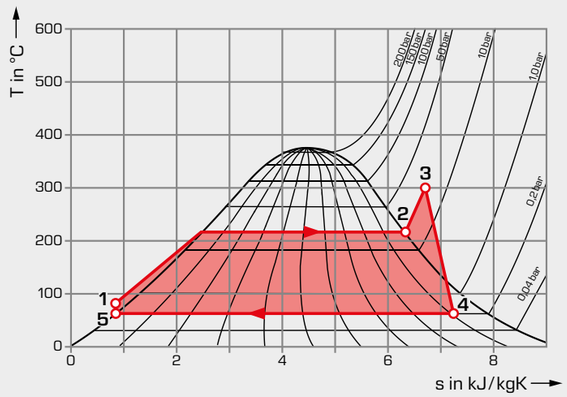

T-s diagram of a steam power plant

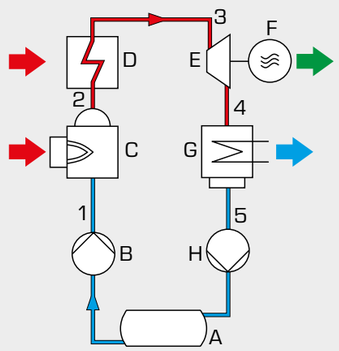

Process schematic for a steam power plant

A feed water tank, **B** feed water pump, **C** steam boiler, **D** superheater, **E** steam turbine, **F** generator, **G** condenser, **H** condensate pump;

- thermal energy, low temperature,
- thermal energy, high temperature,
- mechanical/electrical energy

The T-s diagram represents the Rankine cycle of a steam power plant. The working medium is water or water steam.

1 – 2
the water is **isobarically** heated and evaporated in a steam boiler at a pressure of 22 bar

2 – 3
isobaric superheating of the steam to 300°C

3 – 4
polytropic expansion of the steam in the steam turbine to a pressure of 0,2 bar; mechanical energy is released in the process

Point 4
wet steam area: the wet steam content is now only 90 %

4 – 5
condensation of the steam

5 – 1
increase of the pressure to boiler pressure via the condensate and feed water pump, the cyclic process is complete

ET 860
Safety devices on steam boilers

Description

- **steam boiler simulation with pressure and water level regulation**
- **safety chain with commercially available components**
- **transparent boiler, clear view of the water level**
- **GUNT software for data acquisition**

The pressure and temperature in a steam boiler are increased by constantly supplying energy so that the liquid medium (in most cases water) becomes gaseous. Steam boilers are monitored by safety devices which are electrically connected in series, the so-called "safety chain". If one of the monitoring or control devices trips, an alarm is triggered and the entire system or the affected system component is switched off.

The ET 860 trainer enables a steam boiler simulation to demonstrate the operating principle and response behaviour of a safety chain according to legal regulations. The trainer has a closed water circuit which consists of a supply tank, a pump and a transparent steam boiler model with burner. The boiler is equipped with industrial components which monitor and/or regulate the water level and the pressure.

The components used have a high practical relevance. The safety chain for the burner is functional. Burner operation is simulated.

In addition to the safety devices, the system is equipped with 15 fault circuits. This enables the simulation of system component faults so that students can learn how to localise the faults.

Sensors measure the water level and the pressure. The measured values are transmitted directly to a PC via USB. The data acquisition software is included. The process schematic with the safety components, the pressure curves and a representation of the water level can be observed in the software.

Learning objectives/experiments

- model of an oil-fired steam boiler with operating and safety components
- characteristics of the monitoring elements
- fault circuits
  - burner with flame monitoring
  - pressure switch and limiter
  - feed water and level controller
  - high and low water limiter

ET 860
Safety devices on steam boilers

1 water level monitoring, 2 burner, 3 steam boiler model, 4 supply tank, 5 switch cabinet, 6 switch box for fault circuit, 7 pressure measurement equipment

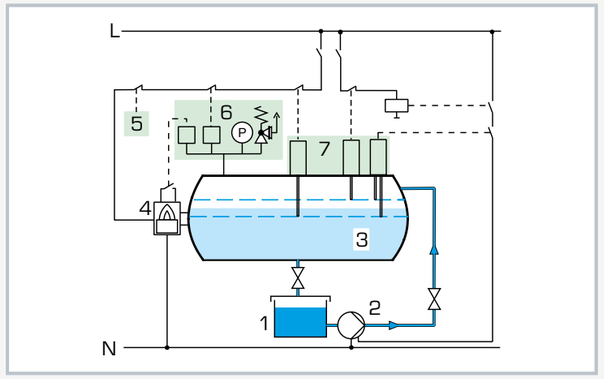

Safety chain of a steam boiler
1 supply tank, 2 feed water pump, 3 boiler, 4 burner, 5 time control, 6 pressure monitoring, 7 water level monitoring;
green: safety chain according to legal regulations , blue: water

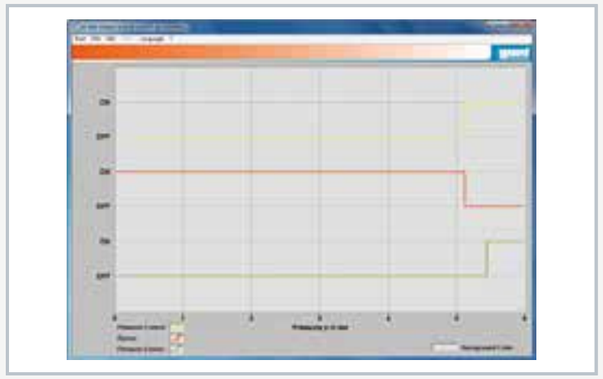

Software screenshot: behaviour of burner, pressure limiter and pressure controller if the pressure in the boiler rises

Specification

[1] simulation of the operation of a steam boiler
[2] control of water level and pressure of the boiler and fault circuit
[3] 15 faults that trigger the safety chain
[4] safety chain according to legal regulations containing: level switches, pressure switch and pressure controller
[5] transparent boiler to observe the water level
[6] steam pressure simulated using compressed air
[7] operation of burner simulated
[8] front panel with process schematic, indicator lamps and lab jacks
[9] GUNT software for data acquisition via USB under Windows 7, 8.1, 10

Technical data

Boiler capacity: 110L
Supply tank capacity: 150L

Pump
- power consumption: 40...70W
- max. flow rate: 66L/min
- max. head: 4m

Pressure switch: 0,5...6bar
Pressure limiter: 0,5...6bar
Safety valve: 6bar

Measuring ranges
- pressure: 0...6bar
- level: 0...100%

230V, 50Hz, 1 phase
230V, 60Hz, 1 phase
120V, 60Hz, 1 phase
LxWxH:: 1850x790x1800mm
Weight: approx. 220kg

Required for operation

Compressed air connection: 5bar
PC with Windows

Scope of delivery

1 trainer
1 GUNT software CD + USB cable
1 digital multimeter
1 set of laboratory cables
1 set of instructional material

ET 805.50
Determination of the vapour content

Learning objectives/experiments

- determining the vapour content using
  - a separating calorimeter with cyclone water separator
  - a throttling calorimeter with vapour depressurisation
- using an h-s diagram

Description

■ two different ways to determine the vapour content

The vapour content x is a dimensionless ratio between 0 and 1. It is defined by the ratio of mass of vapour and total mass. The total mass is calculated from the sum of fluid mass and vapour mass. If the vapour content is x=0, the evaporation medium is completely liquid, x=1 means dry saturated vapour, a value in between means wet vapour with a variable liquid content. Separating and throttling calorimeters are used to determine the vapour content. In practice, devices to determine the vapour content are used in steam power plants, downstream of steam turbines or at steam boilers upstream of the superheater.

ET 805.50 uses water as working medium. Water vapour is also known as steam.

The ET 805.50 trainer uses a two-stage method to determine the vapour content. A separating calorimeter with cyclone water separator is used to determine vapour contents with a high liquid content (0,5<x<0,95). The liquid part is separated, cooled and collected in a measuring cup.

A downstream throttling calorimeter is used to determine vapour contents between x=0,95 and x=1. The wet vapour is depressurised in this process. The remaining vapour part is depressurised and then liquefied in a water-cooled condenser and also collected in a measuring cup. The two quantities can be used to determine vapour mass and total mass to calculate the vapour content.

Sensors measure the pressure and temperature before and after depressurisation. The measuring results can be used to determine the vapour content with the h-s diagram.

The water vapour has to be generated externally, e.g. with the electrical steam generator WL 315.02. To determine the vapour content of the steam power plants ET 805, ET 830, ET 850 or ET 833, ET 805.50 is recommended.

ET 805.50
Determination of the vapour content

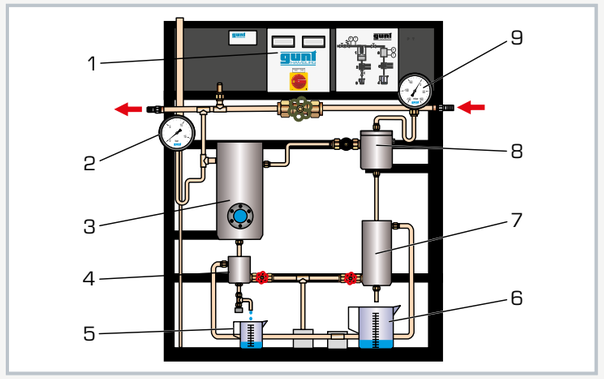

1 displays for temperature, 2 vapour inlet manometer, 3 cyclone water separator, 4 cooler for separated water, 5 measuring cup for separated water, 6 measuring cup for liquefied vapour, 7 condenser, 8 tank for depressurising the vapour, 9 manometer for depressurisation process; red: vapour inlet and outlet

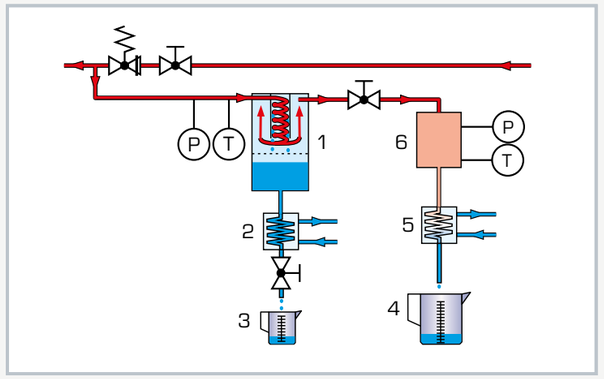

1 water separator with cyclone, 2 cooler, 3 measuring cup for separated water, 4 measuring beaker for liquefied vapour, 5 condenser, 6 tank for depressurising the vapour; red: wet vapour, orange: depressurised vapour, blue: water; P pressure, T temperature

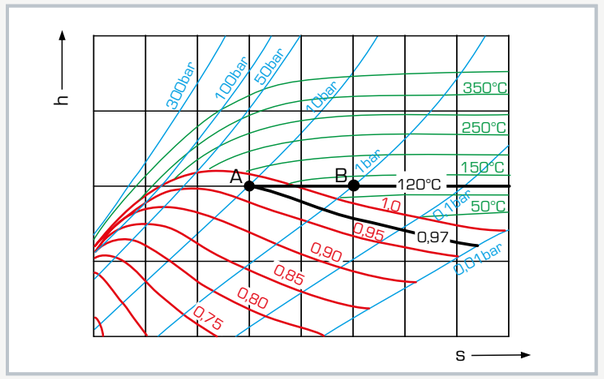

h-s diagram; h enthalpy, s entropy; red: vapour content, green: temperature, blue: pressure; black: example of measuring result: A vapour at 10bar, B vapour after adiabatic depressurisation at 1bar, vapour content 0,97

Specification

[1] two different ways to determine the vapour content
[2] separating calorimeter for vapour content 0,5<x<0,95, with water-cooled aftercooler
[3] throttling calorimeter for vapour content x>0,95, with water-cooled condenser
[4] safety valve for safe operation
[5] water vapour has to be supplied by an external steam generator, e.g. electrical steam generator WL 315.02
[6] accessory for steam power plants ET 805, ET 830, ET 850 or ET 833

Technical data

Supplied vapour
- max. temperature: 240°C
- max. pressure: 10bar

Safety valve: 10bar

Measuring ranges
- temperature: 0...400°C
- pressure (inlet): 0...16bar
- pressure (outlet): -150...100mbar

230V, 50Hz, 1 phase
230V, 60Hz, 1 phase
120V, 60Hz, 1 phase
UL/CSA optional
LxWxH:: 890x800x1890mm
Weight: approx. 90kg

Required for operation

steam: max. 10bar, 240°C
water connection, drain

Scope of delivery

1 trainer
2 measuring cups
1 set of weights
1 set of instructional material

ET 805 – ET 851
GUNT Steam power plants

GUNT steam power plants for laboratory and experimental applications offer a practical approach to teaching this important subject area in technical fields of study. They are particularly well suited for investigating and understanding the behaviour of steam power plants under different operating conditions. The plants are built with real, industrial components, and can also be used to teach aspects such as maintenance, repair, measurement technology, and control engineering.

ET 810
Steam power plant
with steam engine
(5 W)

ET 813 Two-cylinder steam engine (500W)
together with HM 365 Universal drive and brake unit and
ET 813.01 Electrical steam generator

ET 850 Steam
generator and
ET 851 Axial
steam turbine
(50W)

GUNT offers a wide range of steam power plants

The GUNT steam power plant product range encompasses everything from simple demonstration facilities with a power output of just a few watts, to modular systems in the medium power range, and a complex steam power plant with a process control system and an output power of 20 kW (ET 805).

Due to the size and complexity of ET 805, many aspects of its operating behaviour correspond to those of real large-scale plants, allowing for hands-on training. ET 805 consists of three separate modules and a control station.

ET 805 Steam power plant 20 kW
with process control system

Module D
control station

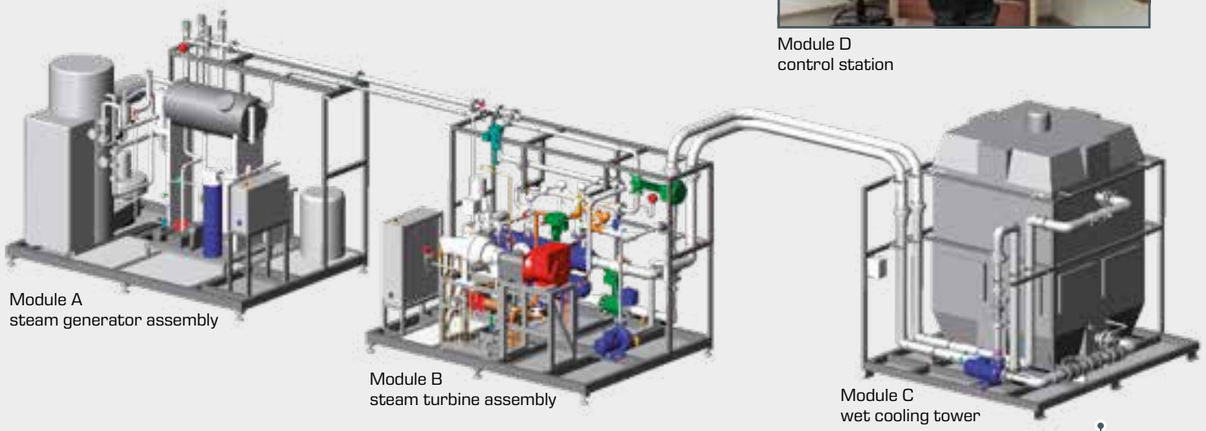

Module A
steam generator assembly

Module B
steam turbine assembly

Module C
wet cooling tower

ET 830
Steam power plant, 1,5 kW

or

ET 833
Steam power plant 1,5 kW
with process control system

5 W | 50 W | 500 W | 1.500 W | 20.000 W

ET 810
Steam power plant with steam engine

Description

- **functional model of a steam power plant**
- **demonstrates the function of a steam engine**

In a steam engine, thermodynamic energy in the form of vapour pressure from steam generators is converted into mechanical energy. This can be used further downstream in the process to generate electricity or to power machinery and vehicles.

A steam power plant consists of a heat source for generating steam, a turbine or steam engine with a generator, and a cooling device for condensing the exhaust steam.

The ET 810 trainer contains the main components of a steam power plant: a gas-fired steam boiler, a single-cylinder piston steam engine with a generator, a condenser, a feed water tank, and a feed water pump.

The steam boiler generates water steam and supplies it to the piston steam engine. A piston and a crank mechanism convert the energy from the steam into mechanical energy.

A generator in the form of a DC motor generates electricity from the mechanical power. Four light bulbs are used as consumers of the resulting electrical energy. The exhaust steam is condensed in a water-cooled condenser.

Safe operation is ensured by safety devices that monitor the boiler temperature and a safety valve.

Sensors record the temperature, pressure, and flow rate at all relevant points. The measured values can be read on displays. Current and voltage from the generator are measured and displayed in the experimental unit.

Learning objectives/experiments

- demonstration of the function of a steam engine
- familiarisation with the components of a steam power plant and how they interact
- recording the vapour pressure curve
- effect of re-evaporation and backfeed of cold water
- determining fuel consumption, the amount of steam generated, the boiler efficiency, and the capacity of the condenser

ET 810
Steam power plant with steam engine

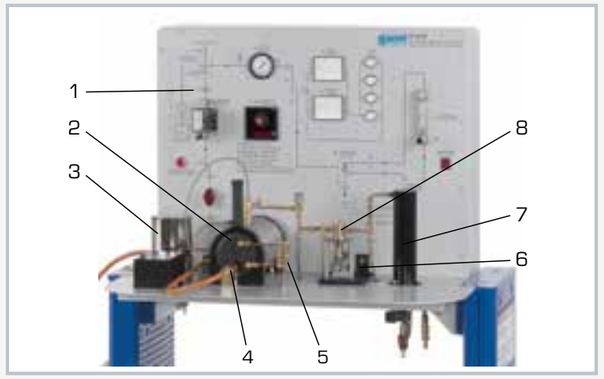

1 process schematic with displays and controls, 2 steam boiler, 3 feedwater tank, 4 burner, 5 boiler water level indicator, 6 generator, 7 condenser, 8 steam engine

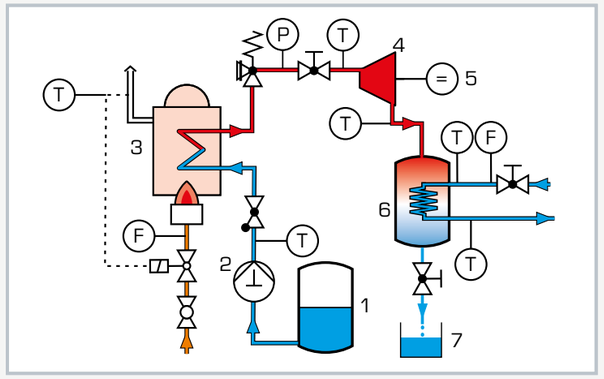

1 feedwater tank, 2 feedwater pump, 3 steam boiler, 4 steam engine, 5 generator, 6 condenser, 7 condensate tank; T temperature, P pressure, F flow rate; orange: gas, red: steam, blue: water

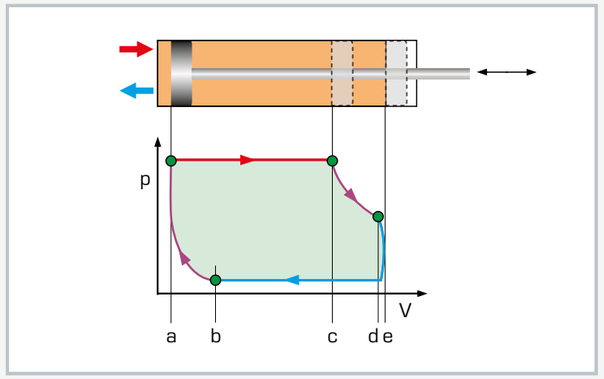

p,V diagram: p pressure, V volume; a top dead centre and inlet opens, c inlet closes, d outlet opens, b outlet closes; red: inlet, blue: outlet, green: work done, purple: compression and expansion

Specification

[1] demonstration of a steam power plant with single-cylinder piston steam engine
[2] gas-fired boiler for steam generation
[3] water-cooled condenser
[4] DC generator
[5] light bulbs as consumers
[6] sensor and display for temperature, pressure, flow rate, voltage and current
[7] safety valve and temperature monitoring for safe operation

Technical data

Steam engine
- power: max. 5W
- speed: max. 1200min^{-1}
- cylinder: Ø 20mm

Generator
- DC motor: max. 3,18W at 6000min^{-1}

Gas-fired boiler
- safety valve: 4bar
- gas connection 3/8"L (propane or butane)

Measuring ranges
- temperature: 8x -20...200°C
- pressure: 0...6bar
- flow rate:
  - 0...110L/h (gas)
  - 15...105L/h (water)
- voltage: 0...10VDC
- current: 0...250mA

230V, 50Hz, 1 phase
230V, 60Hz, 1 phase
120V, 60Hz, 1 phase
UL/CSA optional
LxWxH: 1700x810x1440mm
Weight: approx. 110kg

Required for operation

water connection, drain, gas supply 3/8"L (propane gas or butane gas)

Scope of delivery

1 trainer
1 set of hoses
1 oil (100mL)
1 set of accessories
1 set of instructional material

ET 813 + ET 813.01 + HM 365
Steam power plant with two-cylinder steam engine

The experimental plant, consisting of a two-cylinder steam engine ET 813, the electrical steam generator ET 813.01 and the universal drive and brake unit HM 365, illustrates the typical cyclic process of a steam power plant. The clear layout and comprehensive instrumentation allow you to observe and understand all functions.

- part of the GUNT-FEMLine
- operating principle of a piston steam engine
- cyclic process of a steam power plant
- power measurement
- energy balances
- determination of efficiency
- electrical steam generator: quick start-up, fully automatic, reliable, no exhaust gases, no fuel necessary
- no special authorisation needed (in EC countries)

HM 365 Universal drive and brake unit

ET 813 Two-cylinder steam engine

ET 813.01 Electrical steam generator

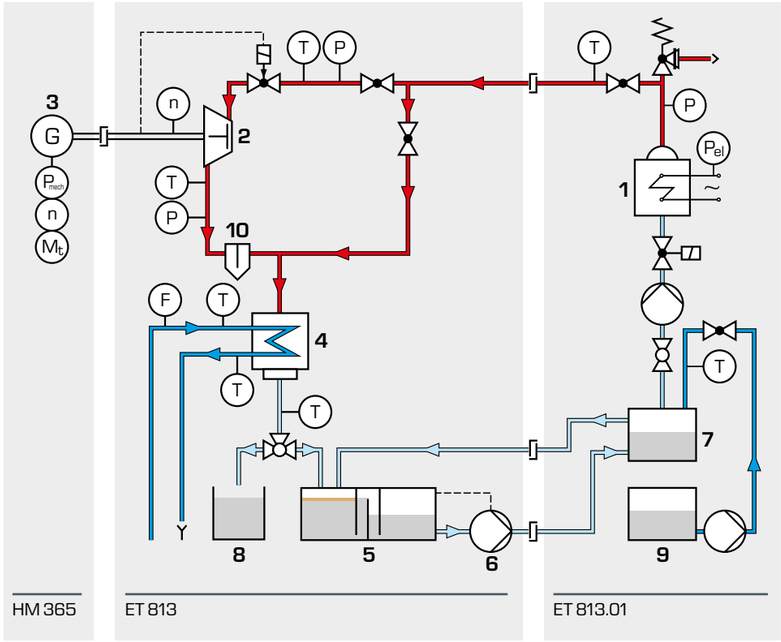

Steam is generated in the electric steam generator **1** and fed to turbine **2** via pipes. The turbine is loaded via the brake unit **3**. The exhaust steam from the steam engine then enters the water-cooled condenser **4**. The condensate is carried to the cascade tank **5**, where lubricating oil is separated from the steam engine. From here, pump **6** pumps the condensate into the feedwater tank **7** and the circuit is closed.

1 steam generator, **2** turbine,
3 brake unit, **4** condenser,
5 cascade tank, **6** pump,
7 feedwater tank,
8 condensate measuring tank,
9 fresh water tank,
10 oil separator;
steam,
cold water / fresh water,
feedwater

A single action two-cylinder steam engine with enclosed crank drive is the core element. Because of its enclosed design this kind of steam engine is called a steam motor.

A piston slide valve inside the cylinder cover controls the flow of steam. The crankshaft moves the piston slide valve via a small crank and a bell crank lever.

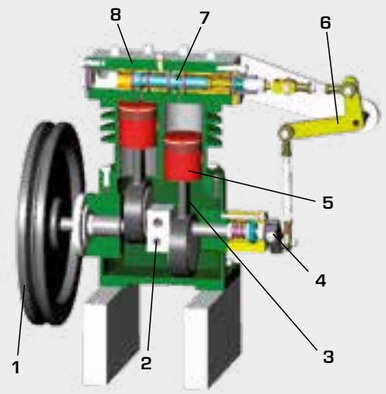

Steam engine

1 flywheel, **2** crankshaft, **3** connecting rod,
4 drive crank to operate the slide valve, **5** piston with piston rings,
6 bell crank lever, **7** piston slide valve, **8** cylinder cover

Software for data acquisition

The software enables display of measured values on a PC. Recording and saving of data history is possible.

With the help of spreadsheet programmes (e.g. MS Excel) saved data can be evaluated. The measured values are directly transmitted to the PC via USB.

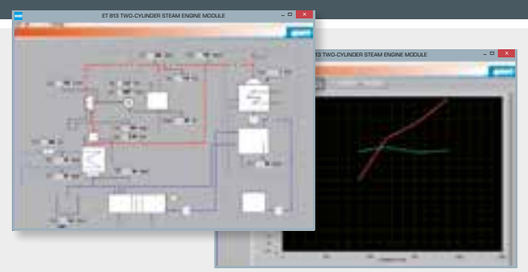

ET 813
Two-cylinder steam engine

The illustration shows a similar unit.

Learning objectives/experiments

- together with HM 365 and ET 813.01
  - determining the amount of steam generated, the mechanical power and the power consumption
  - calculating the overall efficiency
  - determining the heat dissipated in the condenser
  - recording the vapour pressure curve
  - effective output
  - specific steam consumption by the steam engine
  - thermal capacity of the boiler

Description

- **functioning of a two-cylinder piston steam engine**
- **energy balance of the steam power plant**
- **design of a complete steam power plant together with steam generator ET 813.01 and universal drive and brake unit HM 365**
- **part of the GUNT-FEMLine**

In a steam power plant, thermal energy is converted into mechanical energy, and ultimately into electrical energy. A steam power plant consists of a heat source for generating steam, a turbine or steam engine with generator, and a cooling device for condensing. The steam engine is used to convert thermal energy into mechanical energy.

The ET 813 steam engine, together with the brake unit HM 365 as a consumer of the electrical energy and the steam generator ET 813.01, forms a complete steam power plant.

The trainer includes a steam engine, a condenser and a condensate tank, and comprehensive instrumentation.

The steam engine is a sealed two-cylinder steam engine with 180° crank offset and single-acting plunger. It can be used to show the operating properties and functioning of a piston steam engine. Since the exhaust steam in piston steam engines contains entrained lubricating oil, an oil separator and a cascade tank ensure the condensate is cleaned as necessary, so that clean water can be fed back into the feedwater tank of the steam generator ET 813.01.

Sensors record the temperature, pressure, speed, and flow rate at all relevant points. The measured values can be read on digital displays. At the same time, the measured values can also be transmitted directly to a PC via USB. The data acquisition software is included.

ET 813
Two-cylinder steam engine

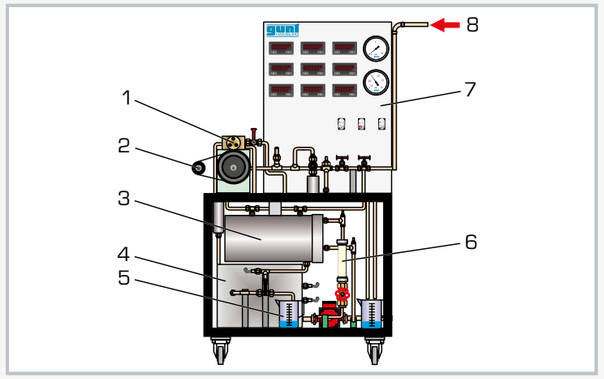

1 steam engine, 2 belt drive to HM 365, 3 condenser, 4 condensate tank, 5 condensate measuring tank, 6 sensor for cooling water flow rate, 7 displays and controls, 8 live steam supply from ET 813.01

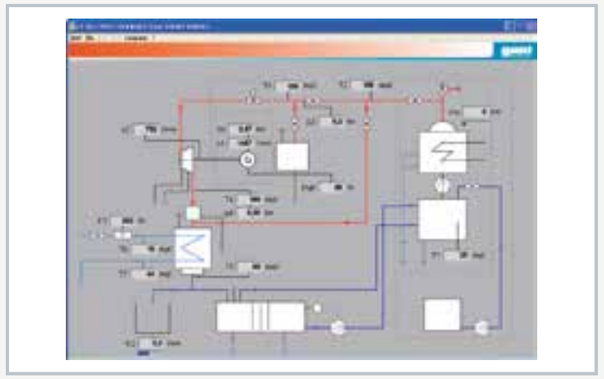

Software screenshot: process schematic

Experimental setup ready for operation: left: brake unit HM 365, centre: two-cylinder steam engine ET 813, right: steam generator ET 813.01

Specification

[1] two-cylinder piston steam engine
[2] atmospheric capacitor
[3] condensate tank as cascade tank with condensate pump
[4] steam engine loaded via brake unit HM 365
[5] sensor and display for temperature, pressure, flow rate, and speed
[6] determination of amount of steam via condensate
[7] steam supplied by steam generator ET 813.01
[8] GUNT software for data acquisition via USB under Windows 7, 8.1, 10

Technical data

Two-cylinder piston steam engine
- speed: max. 1000min^{-1}
- max. continuous power: 500W
- 2 cylinders

bore: 50mm
stroke: 40mm

Condensate pump
- power consumption: max. 60W
- max. flow rate: 2,9m^3/h
- max. head: 4m

Condenser
- transfer surface: 3800cm^2

Measuring ranges
- temperature: 7x 0...400°C
- pressure: 0...10bar / 0...1,6bar
- speed: 0...1200min^{-1}
- flow rate: 100...1000L/h (cooling water)

230V, 50Hz, 1 phase
230V, 60Hz, 1 phase; 120V, 60Hz, 1 phase
UL/CSA optional
LxWxH: 950x800x1750mm
Weight: approx. 200kg

Required for operation

water connection, drain, steam (8kg/h, 7bar)
PC with Windows recommended

Scope of delivery

1 trainer
3 measuring cups
1 stopwatch
1 set of accessories
1 GUNT software CD + USB cable
1 set of instructional material

ET 850 + ET 851
Laboratory scale steam power plant

When combined, the ET 850 Steam generator and the ET 851 Axial steam turbine from GUNT represent a real laboratory-sized steam power plant.

This plant has all the important components of a real large-scale plant: A once-through water-tube boiler with superheater, a condenser with water jet pump for vacuum operation, a feed water tank, pumps for condensate and feed water, a steam turbine with dynamometer, shaft sealing with labyrinth and sealing steam.

ET 850 Steam generator

1 steam boiler, **2** water separator, **3** superheater, **4,10** condenser, **5** water jet pump, **6** condensate pump, **7** feed water tank, **8** feed water pump, **9** turbine,

ET 851 Axial steam turbine

11 brake; **F** flow, **P** pressure, **PD** differential pressure, **Q** exhaust gas analysis, **S** speed, **T** temperature, **M** torque

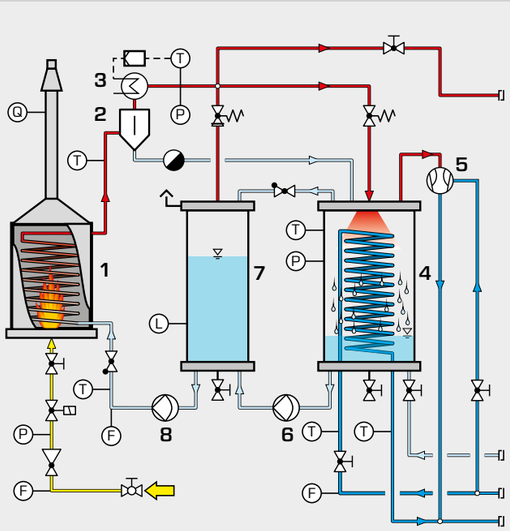

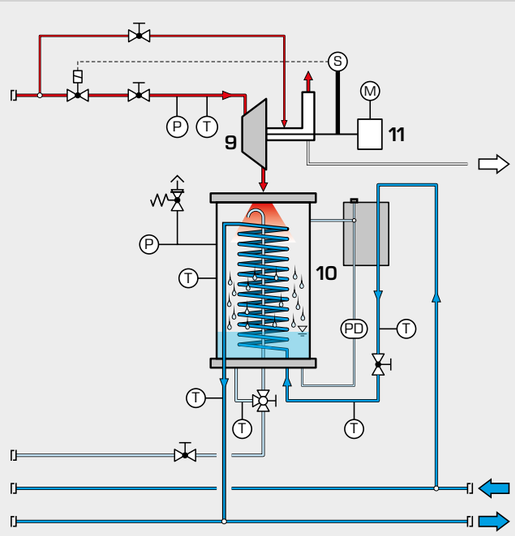

The operating behaviour is very similar to that of a real plant. Students can observe and practice the careful adjustment of the steam generator, turbine, condenser and superheater. The data acquisition software evaluates the results efficiently and accurately, and provides a quick overview.

- once-through water-tube steam boiler design assures highest safety
- quick steam generation due to small water capacity
- electrical superheater enables adjustable superheating of steam
- clean and odourless combustion due to heating with propane or natural gas
- water-cooled condenser evacuated by water jet pump enables operation without steam turbine ET 851 as well

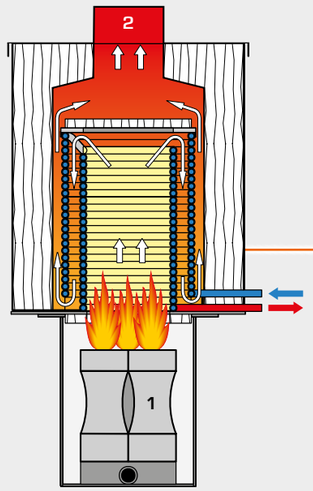

Sectional view of the ET 850 Steam generator

1 burner, **2** exhaust gas, ⬆ direction of flow of the heated air along the heat exchanger

ET 850 Steam generator

ET 851 Axial steam turbine

- single-stage axial flow impulse turbine
- vertical shaft mounted on ball bearings
- contactless labyrinth gland with sealing steam enables vacuum operation
- transparent, water-cooled condenser
- wearless eddy current brake with permanent magnet
- safety cut-off in case of overspeed via trip valve
- steam flow rate determined via condensate level

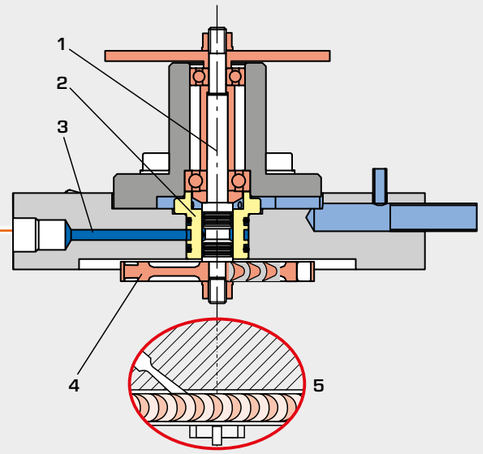

1 shaft, **2** labyrinth unit, **3** steam inlet, **4** rotor, **5** sectional view of nozzle and blades

ET 850
Steam generator

Learning objectives/experiments

- specific characteristic values of a steam boiler
- efficiency of a steam generator
- analysis of the exhaust gases
- influence of different burner settings
- saturation temperature and pressure of the steam
- steam enthalpy
- determination of the heat flux density and the overall heat transfer coefficient

Description

- **laboratory-scale steam generator for wet or overheated steam**
- **characteristic values of a steam boiler**
- **various safety and monitoring devices**
- **setting up a complete steam power plant in conjunction with the ET 851 steam turbine**

A steam generator generates steam which will later be used in drives for steam turbines or for heating. Steam generators and steam consumers together form a steam power plant. Steam power plants work according to the Rankine cycle which is still one of the most important industrially used cyclic processes. Steam power plants are mainly used for electrical power generation.

The ET 850 steam generator and the ET 851 axial steam turbine together form a complete laboratory-scale steam power plant.

The ET 850 trainer serves to familiarise students with the components and principle of operation of a steam generator and enables them to examine the characteristic values of the system.

If the steam generator is operated without the steam turbine, the generated steam is directly liquefied in a condenser and fed back into the evaporation circuit via condensate and feed water pump. A water jet pump evacuates air from the condenser and generates negative pressure. The steam boiler is a once-through boiler with small water content and a short warm-up time.

As all components are clearly arranged on the front panel, the cyclic process can be easily monitored and understood. Sensors record the temperature, pressure and flow rate at all relevant points. The measured values can be read on digital displays. At the same time, the measured values can also be transmitted directly to a PC via USB. The data acquisition software is included.

The steam generator has been constructed according to the Pressure Equipment Directive, it has been pressure-tested and is equipped with all legally required safety devices.

ET 850
Steam generator

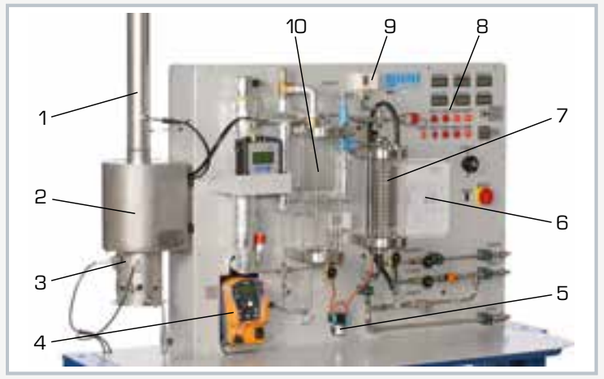

1 chimney for exhaust gas, 2 steam boiler, 3 burner, 4 feed water pump, 5 condensate pump, 6 process schematic, 7 condenser, 8 displays and controls, 9 pressure switch, 10 feed water tank

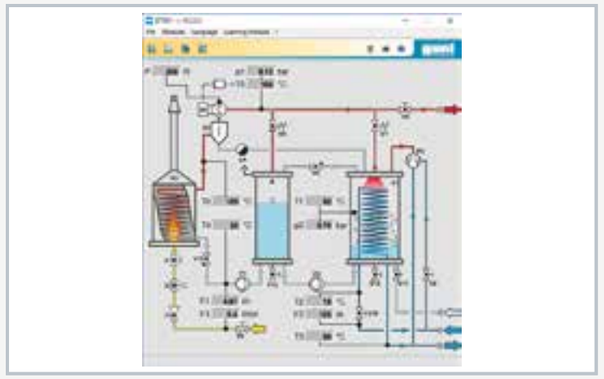

Software screenshot: process schematic

Left: ET 850 steam generator; right: ET 851 axial steam turbine; set up ready for operation, together they form a steam power plant

Specification

[1] steam generator with gas-powered heater
[2] ET 851 steam turbine can be connected to operate a steam power plant
[3] condenser as a thick-walled glass cylinder with water-cooled tube coil and water jet pump for air extraction
[4] closed-circuit feed water supply
[5] sensor for temperature, pressure, flow rate
[6] safety facilities in accordance with the Pressure Equipment Directive for safe operation
[7] exhaust gas analysis with exhaust gas analyser
[8] GUNT software for data acquisition via USB under Windows 7, 8.1, 10

Technical data

Burner
- heating power: 6kW

Steam generator
- once-through boiler
- operating pressure: 8bar, max. pressure: 10bar
- max. steam temperature: 250°C
- max. steam output: 8kg/h
- power of superheater: 750W

Measuring ranges
- temperature: 0...400°C
- pressure:
  - 0...1,6bar abs. (condenser)
  - 0...16bar (live steam)
- flow rate:
  - 0...14L/min (propane gas)
  - 0...720L/h (cooling water)
  - 0...15L/h (feed water)

230V, 50Hz, 1 phase
230V, 60Hz, 1 phase, 120V, 60Hz, 1 phase
LxWxH: 1830x790x1770mm (without chimney)
Weight: approx. 280kg

Required for operation

gas supply (propane gas): 700g/h, 50mbar
water connection: 720L/h, 2bar, drain
ventilation, exhaust gas routing
PC with Windows recommended

Scope of delivery

1 trainer
1 GUNT software CD + USB cable
1 exhaust gas analyser
1 packing unit of distilled water (20L)
1 set of tools
1 set of instructional material

ET 851
Axial steam turbine

Description

- **laboratory-scale axial single-stage steam turbine**
- **variety of safety and monitoring equipment**
- **design of a complete steam power plant together with the ET 850 steam generator**

Steam turbines are turbomachines. In practice, steam turbines are mainly used in power plants to generate electricity. A distinction is made between turbines depending on the flow direction and state of the steam, the working process, and steam supply and discharge.

The ET 851 experimental unit is a single-stage axial impulse turbine with a vertical axis. The steam required is generated by the steam generator ET 850. The turbine can be operated with saturated steam or superheated steam. The steam is expanded in the turbine and condensed via the water-cooled condenser. Load is applied to the turbine via an eddy current brake. The turbine has a non-contact labyrinth seal on the shaft with a sealing steam circuit. The turbine is fitted with various safety devices in order to prevent damage such as by excessively high speed or pressure in the system.

Sensors record the temperature, pressure, and flow rate at all relevant points. Turbine speed and torque are measured electronically at the eddy current brake. The measured values can be read on digital displays. At the same time, the measured values can also be transmitted directly to a PC via USB. The data acquisition software is included.

The ET 851 axial steam turbine, together with the ET 850 steam generator, forms a complete laboratory-scale steam power plant.

Learning objectives/experiments

- principle of operation of a steam turbine:
  - steam consumption of the turbine
  - turbine output at different settings
  - investigation of the losses occurring in different turbine components
  - power and torque curve
  - overall efficiency compared to the theoretical efficiency

ET 851
Axial steam turbine

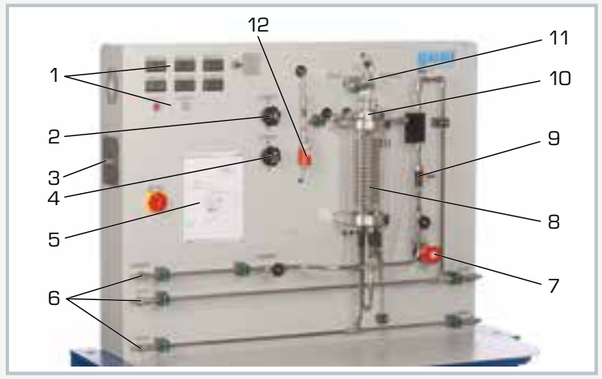

1 displays and controls, 2 valve for sealing steam, 3 steam connection, 4 valve for steam inlet, 5 process schematic, 6 water connections, 7 pressure sensor for condensate measurement, 8 condenser with coil, 9 cooling water flow rate sensor, 10 turbine, 11 eddy current brake, 12 pressure sensor

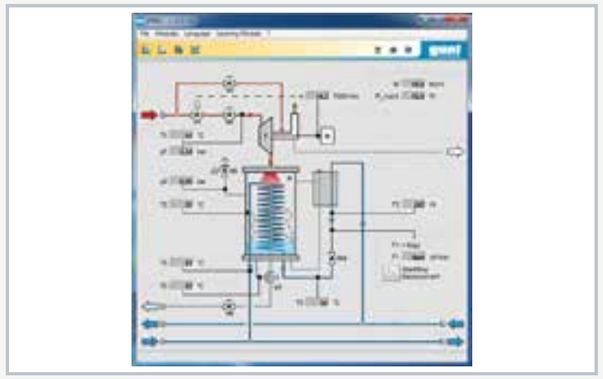

Software screenshot: process schematic

Left: ET 850 steam generator and right: ET 851 axial steam turbine; assembled ready for operation, together both units form a complete steam power plant

Specification

[1] single-stage axial impulse turbine, mounted in corrosion-resistant, sealed ball bearings
[2] load on the turbine by eddy current brake
[3] condenser with water-cooled coiled tube
[4] steam supply from ET 850 steam generator
[5] various safety devices for safe operation
[6] sensors and digital indicator for speed, temperature, pressure and flow rate
[7] GUNT software for data acquisition via USB under Windows 7, 8.1, 10

Technical data

Single-stage axial impulse turbine
- impeller inner diameter: 54mm
- max. speed: 40000min^{-1}
- max. inlet pressure: 9bar abs.
- max. outlet pressure: 1bar abs.
- nominal power output: 50W

Measuring ranges
- pressure
  - steam inlet: 0...16bar
  - condenser: 0...1,6bar
  - differential pressure: 0...50mbar
- cooling water flow rate: 0...720L/h
- speed: 0...50000min^{-1}
- torque: 0...70Nmm
- temperature: 0...400°C

230V, 50Hz, 1 phase
230V, 60Hz, 1 phase
120V, 60Hz, 1 phase
LxWxH: 1530x790x1770mm
Weight: approx. 180kg

Required for operation

water connection: 350L/h, drain
PC with Windows recommended

Scope of delivery

1 trainer
1 GUNT software CD + USB cable
1 set of instructional material

ET 830
Steam power plant, 1,5kW

Description

- **complete laboratory-sized steam power plant**
- **closed steam-water circuit**
- **GUNT software for data acquisition**
- **plant monitored and controlled with PLC**

In steam power plants, thermal energy is first converted into mechanical energy and then into electrical energy. A steam power plant essentially consists of a heat source for generating steam, a turbine with load, and a cooling mechanism for condensing the steam.

ET 830 has been designed specifically for engineering education in the field of power plant technology, and driving and driven machines. It offers a wide range of experiments to learn about the operational processes in a steam power plant.

An oil-fired once-through steam boiler produces wet steam that is turned into superheated steam by means of a superheater. The boiler's short heat-up time means rapid steam generation is possible. Load is applied to the turbine with a generator. The turbine output is determined by speed and torque.

Downstream of the turbine, the steam is condensed and returned to the boiler. The feedwater circuit is fitted with a complete water treatment system, which consists of a regenerable ion exchanger and chemical dosing. Sensors record the temperature, pressure, speed, and flow rate at all relevant points. The measured values can be read on digital displays. At the same time, the measured values can also be transmitted directly to a PC via USB. The data acquisition software is included. The control panel includes a clear process schematic of the plant. The system is monitored and controlled by a programmable logic controller (PLC).

The experimental plant is built in accordance with statutory safety regulations and includes the mandatory safety facilities. The steam generator is type tested and does not require specific permissions.

The plant can optionally be operated with the cooling tower ET 830.01 or ET 830.02 to supply cooling water.

Learning objectives/experiments

- steam power plant and its components
- start-up, operation and shut down of a steam power plant
- closed steam-water circuit with feedwater treatment
- among others, determining:
  - boiler efficiency
  - mechanical/thermal efficiency of the turbine
  - condenser efficiency
  - specific fuel consumption of the plant

ET 830
Steam power plant, 1,5kW

1 superheater, 2 burner, 3 boiler, 4 condenser, 5 condensate pump, 6 turbine, 7 displays and controls, 8 feedwater tank with feedwater treatment

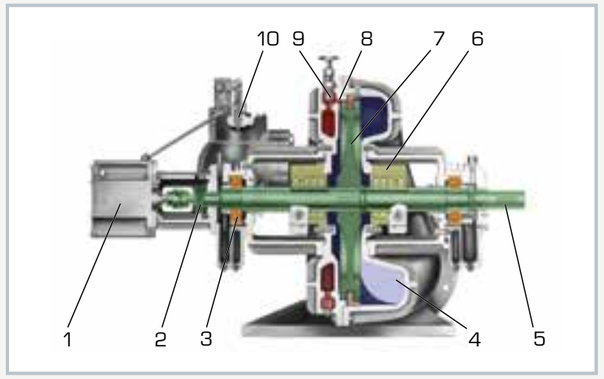

Sectional representation of the steam turbine used: 1 speed regulator, 2 tripping function, 3 bearing, 4 exhaust nozzle, 5 shaft, 6 shaft seal, 7 Curtis wheel, 8 nozzle, 9 nozzle valve, 10 control valve

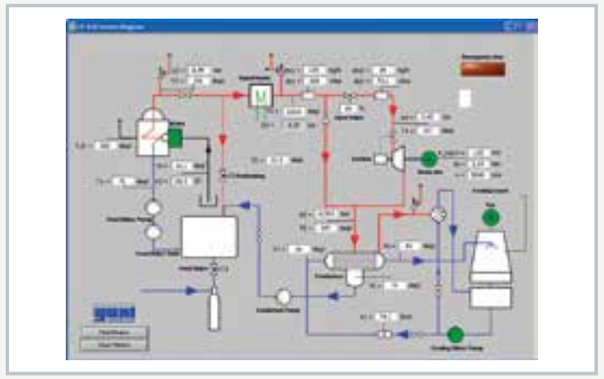

Software screenshot: process schematic

Specification

[1] laboratory-sized steam power plant
[2] oil-fired steam generator with electric superheater
[3] single-stage axial turbine with Curtis wheel, vacuum or exhaust operation
[4] DC generator as turbine load
[5] water-cooled condenser
[6] feedwater treatment
[7] GUNT software for data acquisition via USB under Windows 7, 8.1, 10
[8] plant monitored and controlled with integrated PLC
[9] cooling water connection 10m³/h or cooling tower ET 830.01/ET 830.02 required

Technical data

Steam generator
- steam output: 200kg/h at 11bar
- max. fuel consumption: 12L/h
- heat-up time: 8min
- max. pressure: 13bar

Superheater
- power: 7kW

Single-stage axial turbine with Curtis wheel and hydraulic speed regulator
- power: max. 1,5kW at 3000min^{-1}

Water-cooled condenser
- cooling capacity: 98kW
- transfer surface: 2,5m^2

Measuring ranges
- temperature: 9x 0...400°C, 2x 0...100°C
- flow rate: 0...167L/min (cooling water)
- pressure: 3x 0...16bar, 1x ±1bar
- torque: 0...20Nm
- speed: 0...4000min^{-1}

400V, 50Hz, 3 phases
400V, 60Hz, 3 phases
230V, 60Hz, 3 phases
LxWxH: 3500x2000x2450mm
Weight: approx. 1950kg

Required for operation

cooling water 10m^3/h, drain or ET 830.01/ET 830.02
Compressed air connection: 4,5bar, 150L/h
ventilation & exhaust gas routing required
PC with Windows recommended

Scope of delivery

1 experimental plant
1 GUNT software CD + USB cable
1 set of instructional material including detailed operating manual

ET 833 Steam power plant 1,5 kW with process control system

Complete, fully functional steam power plant based on ET 830

High performance steam generator heated with fuel oil, steam output of 200 kg/h	Control station with complete instrumentation on LCD monitors
Electrically heated superheater	Operation via touch screen
Single-stage industrial steam turbine, power 1.5 kW at 3000 min^{-1}	Modern, digital process control system based on field bus and PLC
Water-cooled condenser with condensate and vacuum pumps	Integrated data acquisition and calculation of performance parameters
Feed water treatment with water softening	Safety monitoring and emergency shut-down via PLC with alarm and warning logger
Separate wet cooling tower with high-capacity cooling water pump	Extensive manual and instructional material
Plant remote control via actuating valves	

ET 833 features a broad variety of learning objectives

- design and function of steam power plant consisting of feed water treatment, steam generator, superheater, steam turbine, condenser and cooling tower
- start-up, operation and shut-down of a steam power plant
- determination of optimal operating parameters
- determination of power input and output
- determination of component efficiencies and overall plant efficiency
- familiarisation with modern plant control via PLC
- familiarisation with pressure, level, flow and temperature control loops
- maintenance and monitoring procedures

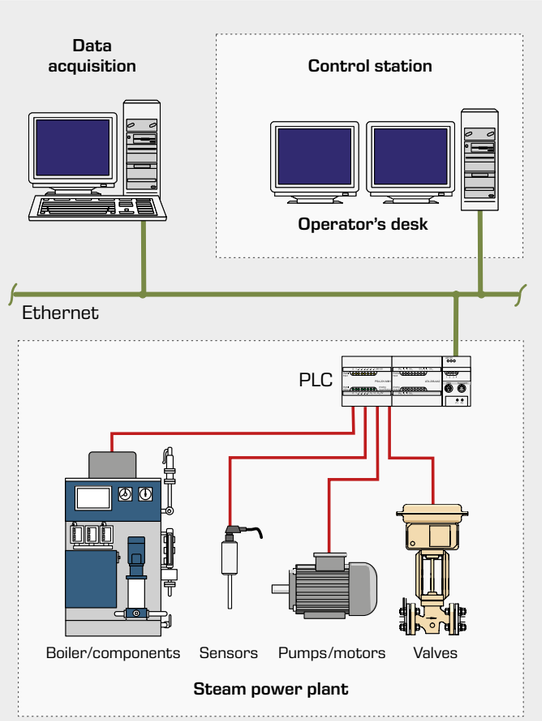

Data communication concept

1 steam generator,
2 feed water pump,
3 condenser,
4 steam turbine,
5 feed water tank,
6 generator,
7 control station,
8 cooling tower,
9 cooling water pump

ET 833
Steam power plant 1,5kW with process control system

The illustration shows the steam power plant together with the cooling tower ET 833.01.

Description

- **complete laboratory-sized steam power plant**
- **process control system based on Ethernet and PLC**
- **plant monitored and controlled via touchscreen control station**

Nowadays large process engineering systems, such as steam power plants, are managed with process control systems (PCS). The entire system is monitored, actuators regulated and controlled, measurements recorded and displayed via the process control system.

The steam power plant ET 833 is specifically designed for training purposes in the field of power plant engineering with process control systems. The system operates very similarly to real large-scale plants due to the high degree of complexity.

An oil-fired once-through steam boiler and a downstream electric superheater generate superheated steam for the single-stage industrial turbine, which is subjected to load via a DC generator. The energy generated is fed back into the grid. The exhaust steam from the turbine is condensed and fed back to the steam boiler.

The feedwater circuit is equipped with a complete water treatment system with ion exchangers and chemical dosing. Sensors capture all relevant parameters. The measured values are both output to the process control system with programmable logic controller and sent to a PC for data acquisition, where they are presented and analysed with GUNT software. Operation of the plant is fully monitored and controlled by the process control system. If necessary, the process control system initiates activation of the corresponding actuators. It is operated via modern touchscreen technology on the control station. A safety system ensures the relevant components are shut-down and error conditions detected in critical operating states.

The experimental plant is built in accordance with statutory safety regulations and includes the mandatory safety facilities. The steam generator is type tested and does not require specific permissions.

The plant can optionally be operated with the cooling tower ET 833.01 or ET 833.02 to supply cooling water.

Learning objectives/experiments

- steam power plant and its components with control and regulation system
- start-up, operation and shut down of a steam power plant
- familiarisation with system control and monitoring via a process control system
- monitoring, servicing and maintenance tasks
- determining: input and output power, component and system efficiency, specific fuel consumption of the system

ET 833
Steam power plant 1,5kW with process control system

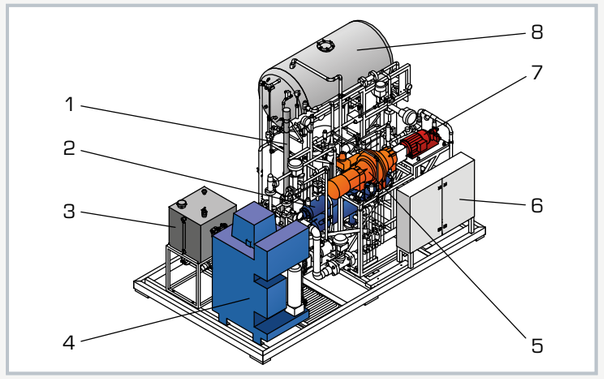

1 superheater, 2 condenser, 3 fuel tank, 4 boiler with switch cabinet, 5 turbine, 6 switch cabinet, 7 generator, 8 feedwater tank with feedwater treatment

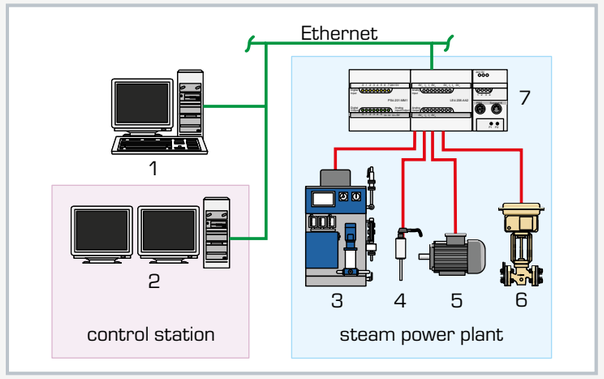

Process control system: 1 data acquisition PC, 2 control PC, 3 steam generator, 4 sensors, 5 pumps/motors, 6 valves, 7 PLC programmable logic controller

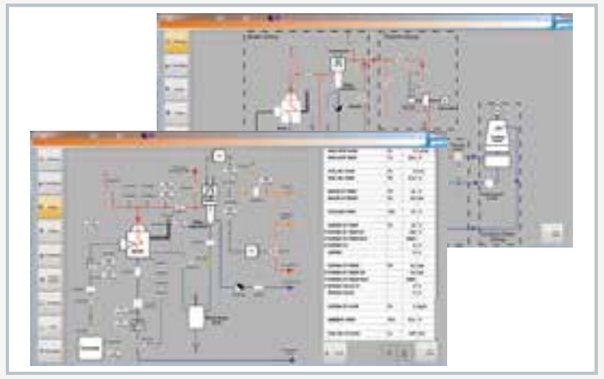

Software screenshot: PCS process control system operated via touchscreen

Specification

[1] laboratory-sized steam power plant
[2] oil-fired once-through boiler with electrical superheater
[3] single-stage industrial steam turbine with DC generator as turbine load
[4] water-cooled condenser
[5] feedwater treatment
[6] process control system for monitoring, control and regulation of the plant
[7] control station with complete instrumentation on modern LCD monitors, touchscreen operation
[8] system equipped with sensors and actuators for monitoring and controlling the plant via integrated PLC and Ethernet
[9] cooling water connection 10m^3/h or cooling tower ET 833.01/ET 833.02 required

Technical data

Steam generator
- steam output: 200kg/h at 11bar
- max. fuel consumption: 12L/h
- heat-up time: 8min
- max. pressure: 13bar

Superheater
- power 7kW

Single-stage axial turbine with Curtis wheel and hydraulic speed regulator
- power: max. 1,5kW at 3000min^{-1}

Water-cooled condenser
- cooling capacity: 98kW
- transfer surface: 2,5m^2

Measuring ranges
- temperature: 12x -50...400°C, 1x 0...100°C
- flow rate: 0...167L/min (cooling water)
- pressure: 3x 0...16bar, 2x 0...4bar, 1x -1...1bar
- torque: 0...10Nm
- speed: 0...4000min^{-1}

400V, 50Hz, 3 phases
400V, 60Hz, 3 phases
LxWxH: 3500x2000x2400mm
Weight: approx. 2250kg

Required for operation

cooling water 10m^3/h or ET 833.01/ET 833.02
Compressed air connection: 4,5bar, 150L/h

Scope of delivery

1 experimental plant
1 control station including hardware and software
1 set of tools
1 set of instructional material

ET 805
Steam power plant 20kW with process control system

The illustration shows the ET 805 steam turbine assembly.

Description

- **complete steam power plant with process control system based on Ethernet and PLC**
- **plant monitored and controlled via touchscreen control station**

Nowadays large process engineering systems, such as steam power plants, are managed with process control systems. The ET 805 Steam Power Plant is specifically designed for training purposes in the field of power plant engineering with process control systems. Due to the size and complexity of the system, in many aspects the operating behaviour corresponds to that of actual large-scale plants, thereby enabling training that is as close to the real thing as possible. The plant consists of four separate modules and can therefore be flexibly adapted to the space available in the laboratory:

Module A steam generator assembly: a gas/oil-fired once-through steam boiler and a downstream electric superheater generate superheated steam. The feedwater circuit is equipped with a water treatment system with ion exchangers and chemical dosing.

Module B steam turbine assembly: the superheated steam is fed to a single-stage industrial turbine with speed control. This drives a synchronous generator which can be operated in grid connected or stand alone mode. The exhaust steam from the turbine is condensed and fed back to the feedwater circuit.

Module C wet cooling tower: with forced draught for operation outdoors.

Module D control station: sensors capture all relevant plant parameters. The measured values are both output to the process control system with programmable logic controller and sent to a PC for data acquisition, where they are presented and analysed with GUNT software.

Operation of the plant is fully monitored and controlled by the process control system. It is operated via modern touchscreen technology on the control station. A safety system ensures the relevant components are shut-down and error conditions detected in critical operating states.

Learning objectives/experiments

- design and function of a complete steam power plant with control and regulation system
- start-up, operation, shut down, servicing and maintenance of a steam power plant
- system control and monitoring via a process control system
- recording and evaluation of the most important operating parameters
- determining: input and output power, component and system efficiency, specific fuel consumption

ET 805
Steam power plant 20kW with process control system

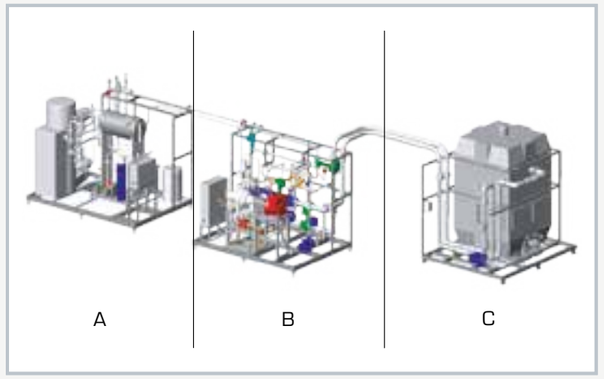

Steam power plant modules without control station: module A steam generator with superheater and feedwater treatment, module B steam turbine with generator and condenser, module C wet cooling tower

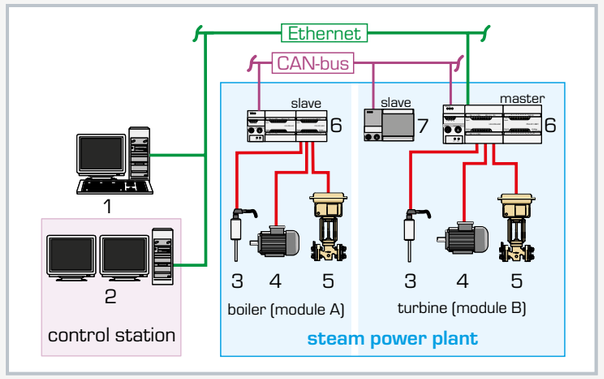

Process control system and module D control station: 1 data acquisition PC, 2 control PC, 3 sensors, 4 pumps/motors, 5 valves, 6 PLC programmable logic controller, 7 PPU synchronous generator

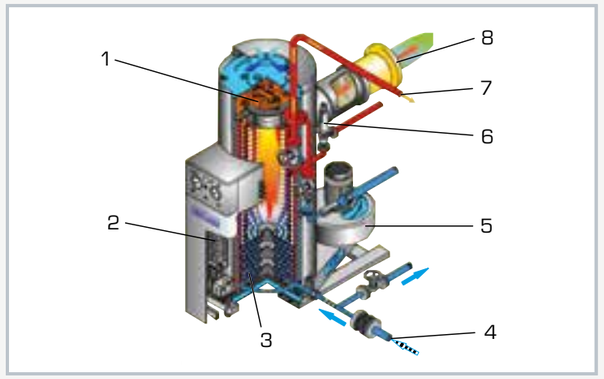

Sectional representation of once-through steam boiler: 1 oil/gas burner, 2 electrical controller, 3 evaporating coil, 4 feedwater supply, 5 combustion air fan, 6 safety valve, 7 steam extraction, 8 exhaust gas nozzle

Specification

[1] laboratory-sized steam power plant
[2] gas/oil-fired once-through steam boiler with electrical superheater
[3] single-stage industrial steam turbine with Curtis wheel
[4] electronic speed control with electro-pneumatic control valve
[5] synchronous generator with PPU synchronising device for grid connected or stand alone operation
[6] water-cooled condenser with cooling water circuit and wet cooling tower
[7] feedwater treatment with ion exchanger and chemical dosing
[8] modern digital system control via a process control system
[9] control station with complete instrumentation on modern LCD monitors, touchscreen operation

Technical data

Steam boiler
- max. steam output: 600kg/h at 13bar
- max. heat output: 393kW
- max. fuel consumption: 36,8kg/h

Superheater, capacity: 32kW, 250°C
Single-stage action turbine with Curtis wheel and electronic speed control
- max. power output: 20kW at 3600min^{-1}

Synchronous generator
- max. output: 17kVA with 400V, 60Hz

Water-cooled condenser
- cooling capacity: 389kW
- transfer surface: 5,5m^2

Cooling tower, max. cooling capacity: 540kW

400V, 50Hz, 3 phases
400V, 60Hz, 3 phases
LxWxH: 3100x2000x2500mm (steam generator)
LxWxH: 2400x2000x2500mm (steam turbine)
LxWxH: 2000x2000x2800mm (cooling tower)
Total weight: approx. 4500kg

Required for operation

water connection: 1,5m^3/h
ventilation, exhaust gas routing

Scope of delivery

1 steam generator assembly
1 steam turbine assembly
1 cooling tower
1 control station including hardware and software
1 set of tools
1 set of instructional material

Basic knowledge

Gas turbines

Thermodynamic principle

The gas turbine works as an open cyclic process. Typical for an open cycle: the working medium is taken from the environment and fed back to it after the process is complete. The cyclic process of a gas turbine can be described by the following idealized changes of state:

- **adiabatic compression** of the cold gas with compressor **(A)** from ambient pressure p_1 to pressure p_2, associated with temperature rising from T_1 to T_2.
- **isobaric heating** of gas from T_2 to T_3 because of heat input. Heat input by burning fuel with oxygen from the air in combustion chamber **(B)**.
- **adiabatic expansion** of hot gas in a turbine **(C)** from pressure p_2 to p_1, associated with temperature decreasing from T_3 to T_4.

One part of the mechanical power generated by the turbine is used for driving the compressor. The rest is available as effective power for driving a generator **(D)** etc.

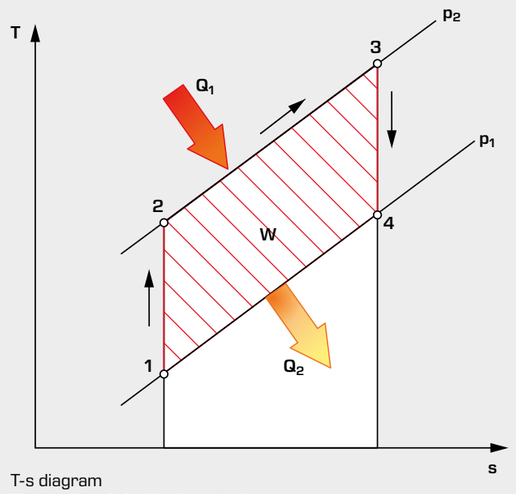

T-s diagram
Illustration of the ideal gas turbine process

Q_1 heat input, **Q_2** heat output, **W** useful work,
T temperature, **s** entropy;
1 - 2 compression, **2 - 3** heating, **3 - 4** expansion

Fields of application

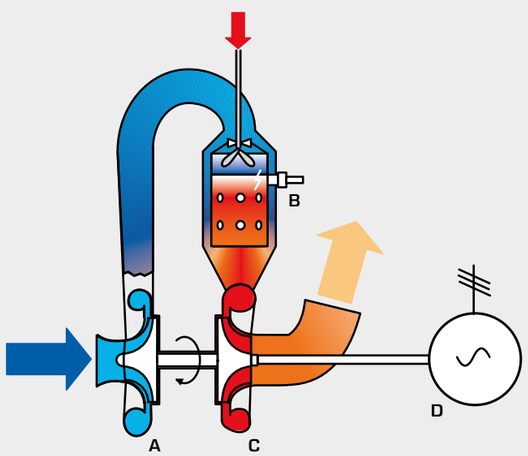

Schematic of a simple gas turbine system

A compressor, **B** combustion chamber,
C turbine, **D** generator;
arrows: **blue** air, **red** fuel, **orange** exhaust

Gas turbines are used when high power and lightweight are required:

- driving aircraft with propeller or jet engine
- driving fast ships, locomotives, or heavy motor vehicles
- driving generators in power plants
- driving compressors and pumps in the petroleum and natural gas industries

Quick starting is another advantage of gas turbines. They run up quickly to full load and therefore are often used as backup drives and for peak loads. In comparison with diesel engines, higher fuel consumption is a disadvantage.

Principle of a two-shaft gas turbine

A two-shaft gas turbine consists of two independent turbines. The first turbine (the high-pressure turbine) is coupled tightly to the compressor and drives the compressor. The second turbine (the power turbine) is not mechanically coupled with the high-pressure turbine, and generates the effective power of the system. A vehicle, a propeller, or a generator can be driven.

The advantage of the two-shaft gas turbine is that compressor and high-pressure turbine are driven at optimal speed for the respective power. Speed or torque at the power turbine can be adapted and optimised to the respective drive function. Vehicles require a variable speed, whereas a synchronous generator needs a constant speed.

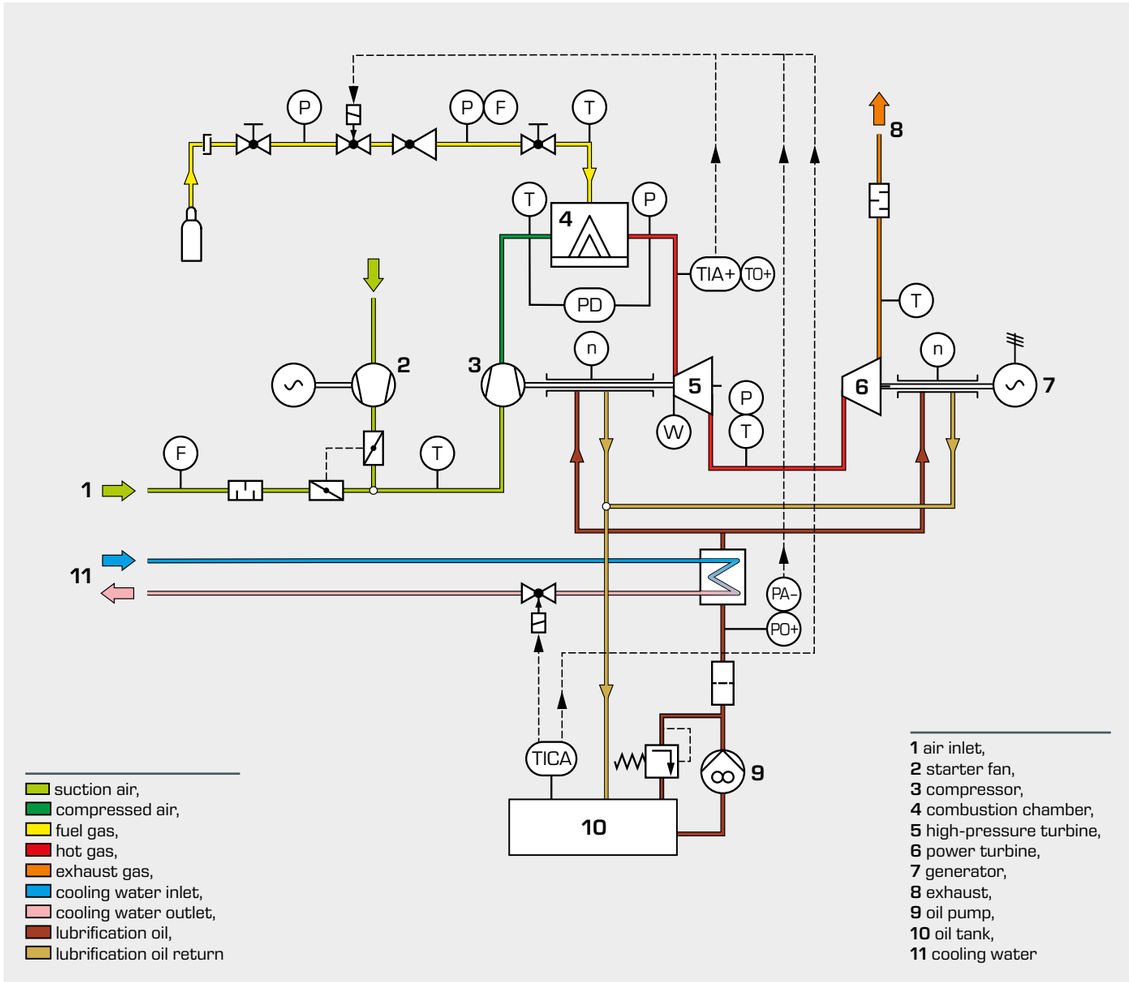

Process schematic of two-shaft gas turbine ET 794 with independent power turbine and generator

The turbine is operated with combustion gas. An electrically driven auxiliary compressor (starter fan) starts the turbine. At a certain minimum speed, fuel gas is fed into the combustion chamber and is electrically ignited. After reaching idle speed, the auxiliary compressor is turned off and the turbine runs on its own.

An oil circuit with a thermostatically controlled oil-to-water cooler, pump, and filter lubricates and cools the turbine bearings.

The turbine shuts down if the oil temperature is too high or the oil pressure is too low.

ET 792
Gas turbine

Learning objectives/experiments

- familiarisation with the function and typical behaviour during operation of a gas turbine
- operation as jet engine
- operation as power turbine
- determining effective power
- thrust measurement
- determining specific fuel consumption
- recording the characteristic of the power turbine
- determining the system efficiency

Description

- **operation with power turbine or as jet engine with propelling nozzle**
- **simple model of a gas turbine**
- **display and control panel with illustrative process schematic**
- **propane gas as fuel**

The trainer ET 792 investigates the behaviour of a system in a two-shaft arrangement (vehicle drive, ship's propulsion or generator drive) and of a jet engine (aircraft's propulsion).

At the core of the trainer are a so-called gas generator and a free-running power turbine. The gas generator consists of a radial compressor, a combustion chamber and a radial turbine. The compressor and turbine are mounted on a shaft.

Depending on the arrangement, the energy of the exhaust gas stream is either converted into mechanical energy in the free-running power turbine (single-shaft arrangement) or accelerated and transformed into thrust via a nozzle (two-shaft arrangement). It is possible to convert from a single-shaft to a two-shaft arrangement in just a few actions.

The gas turbine works as an open cyclic process, with the ambient air being drawn out and fed back in. Intake and exhaust silencers reduce the noise in operation of the power turbine. The use of propane as the combustion gas ensures clean, odourless operation. A start-up fan is used to start the gas turbine.

Relevant measuring values are recorded by sensors and indicated on the display and control panel. At the same time, the measured values can also be transmitted directly to a PC via USB. The data acquisition software is included.

ET 792
Gas turbine

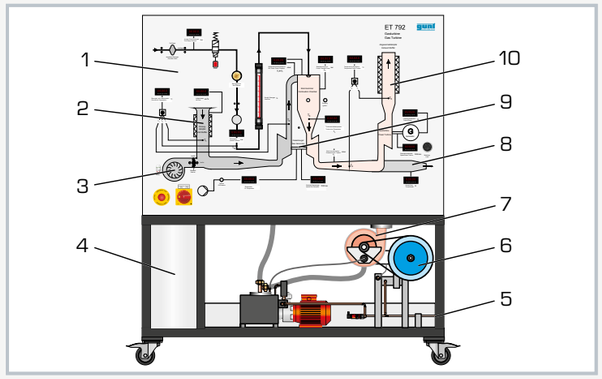

1 process schematic with displays and controls, 2 air intake with silencer, 3 start-up blower, 4 switch cabinet, 5 cooling water connection, 6 generator, 7 power turbine, 8 jet pipe with propelling nozzle, 9 gas generator (compressor, combustion chamber, turbine), 10 exhaust silencer

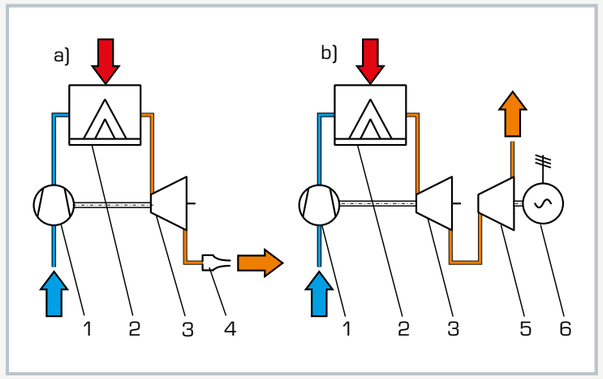

a) single-shaft system, b) two-shaft system; 1 compressor, 2 combustion chamber, 3 turbine, 4 propelling nozzle, 5 power turbine, 6 generator;
blue: cold air, red: fuel, orange: exhaust gas

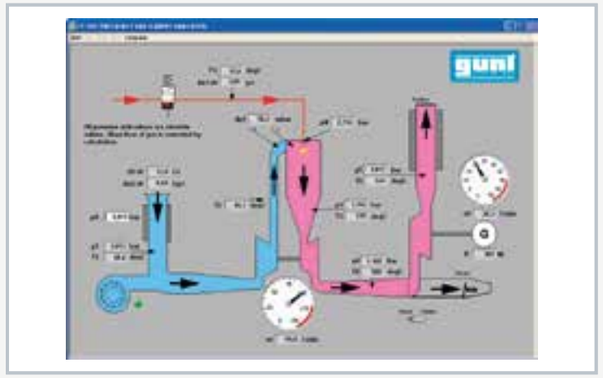

Software screenshot: process schematic of open gas turbine process in a two-shaft arrangement

Specification

[1] function and behaviour during operation of a gas turbine
[2] single-shaft arrangement for operation as jet engine
[3] two-shaft arrangement for operation with power turbine
[4] start-up fan to start the gas turbine
[5] asynchronous motor with frequency converter as generator
[6] conversion of generated electrical energy into heat using four 600W braking resistors
[7] GUNT software for data acquisition via USB under Windows 7, 8.1, 10

Technical data

Gas generator (compressor and high-pressure turbine)
- speed range: 60000...125000min^{-1}
- max. pressure ratio: 1:2,2
- max. mass flow rate (air): 0,125kg/sec
- max. fuel consumption: 120g/min

Power turbine
- speed range: 10000...40000min^{-1}
- mechanical power: 0...2kW
- electrical power: 0...1,5kW
- sound level at 1m distance: max. 80dB(A)
- temperature exhaust gas 700°C

Operation as jet engine
- thrust measurement: 0...50N
- sound level at 1m distance: max. 110dB(A)

Measuring ranges
- temperature: 4x 0...200°C / 3x 0...1200°C
- speed: 0...199999min^{-1}
- electrical power: 0...1999W
- air flow rate: 0...100L/s
- fuel mass flow rate: 0...10,5kg/h
- fuel supply pressure: 0...25bar
- fuel nozzle pressure: 0...4bar
- combustion chamber pressure loss: 0...100mbar
- pressure, turbine inlet in gas generator: 0...2,5bar
- pressure, power turbine inlet: 0...300mbar

230V, 50Hz, 1 phase
400V, 50Hz, 3 phases
400V, 60Hz, 3 phases
230V, 60Hz, 3 phases
UL/CSA optional
LxWxH: 1500x680x1820mm
Weight: approx. 325kg

Required for operation

cooling water 200L/h, propane gas: 4...15bar
ventilation 500m^3/h, exhaust gas routing
PC with Windows recommended

Scope of delivery

trainer, 1 GUNT software CD + USB cable, 1 set of tools, 1 set of instructional material

ET 795
Simulation of a gas turbine

Description

- **illustrative system for simulating a turbine plant**
- **safe testing and simulation of different operating conditions**

When operating real gas turbine power plants in industry, the specified process parameters must be strictly adhered to. In order to be able to start a real plant, the start values are specified. Incorrectly selecting these values can prevent start-up or cause damage to the plant. Critical speed ranges must be passed through as quickly as possible. When operating a plant, certain operating conditions must be avoided in order to prevent damage to the plant or the environment.

The ET 795 experimental unit is a pure simulation device. It is controlled and analysed by means of the software provided. The advantage of a simulation gas turbine power plant is that boundary conditions can be passed through safely and the plant's response can be studied without causing any damage to the plant. The plant's response can be tested by carefully changing the process parameters.

Nine different process parameters can be set via potentiometers on the control unit of the experimental unit. The process parameters control the software. The process parameters include temperature, pressure and pressure ratio as well as the efficiency of the individual components. The mass flow rate and pressure of the fuel, the air supply as well as the load of the generator are also adjusted via the potentiometers.

The software offers various display options. The change in the plant's overall efficiency resulting from the set values can be observed in the software. The fuel-air ratio λ, the power at the drive shaft of the compressor and at the generator as well as the pressure ratio of the compressor can be calculated in the software.

The experimental unit is connected to a PC via USB.

Learning objectives/experiments

- develop a basic understanding of a gas turbine process
- familiarisation with the special features of a dual-shaft turbine plant with free-running power turbine
- test the startup behaviour and load changes of a gas turbine
- simulate the passage through a characteristic diagram
- investigate how the individual components affect efficiency

ET 795
Simulation of a gas turbine

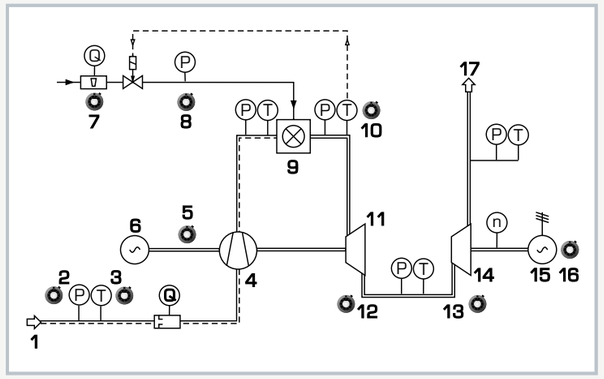

Process schematic of the gas turbine
1 air inlet, 2 potentiometer: intake pressure, 3 potentiometer: intake temperature, 4 compressor, 5 potentiometer: pressure ratio, 6 motor for starting, 7 potentiometer: fuel mass flow, 8 potentiometer: fuel pressure, 9 combustion chamber, 10 potentiometer: combustion chamber temperature, 11 high-pressure turbine, 12 potentiometer: compressor/turbine efficiency, 13 potentiometer: power turbine efficiency, 14 power turbine, 15 generator, 16 potentiometer: generator load, 17 exhaust outlet; P pressure, T temperature, Q ass flow rate, n speed

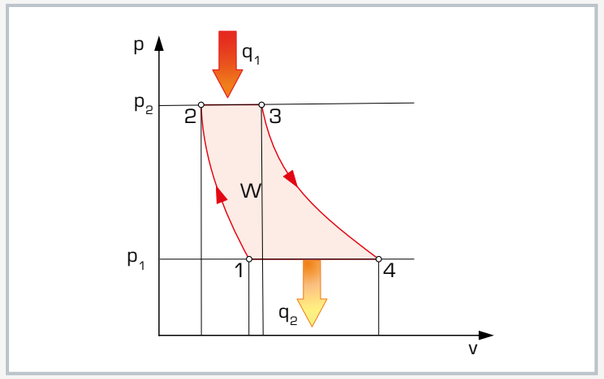

p-v diagram of the gas turbine process
p pressure, v specific volume, W useful work, q_1 heat supply, q_2 heat dissipation
1-2 compression, 2-3 heating, 3-4 expansion, 4-1 cooling

Software screenshot: control panel of a dual-shaft turbine plant

Specification

[1] simulated operation of a gas turbine power plant
[2] dual-shaft turbine plant with free-running power turbine
[3] change 9 process parameters via potentiometer
[4] software calculates: fuel-air ratio λ, compressor pressure ratio, efficiency, gas and air mass flow rates, drive shaft and generator power
[5] GUNT software for data acquisition via USB under Windows 7, 8.1, 10

Technical data

9 potentiometers for setting
- intake pressure: 0...2bar abs.
- intake temperature: 0...100°C
- max. pressure ratio at max. speed: 1...10
- fuel mass flow, valve position: 0...100%
- fuel pressure: 0...10bar
- max. combustion chamber temperature: 500...1500°C
- compressor/turbine efficiency: 0...100%
- power turbine efficiency: 0...100%
- generator load: 0...100%

Inputs and outputs
- 16x analogue in, 1x analogue out
- each 4x digital in/out

LxWxH: 600x350x500mm
Weight: approx. 20kg

Required for operation

PC with Windows

Scope of delivery

1 experimental unit
1 GUNT software CD + USB cable
1 manual

ET 794
Gas turbine with power turbine

Learning objectives/experiments

- determining the shaft power
- determining specific fuel consumption
- recording the characteristics of the power turbine
- determining the system efficiency

Description

- **simple model of a gas turbine**
- **two-shaft arrangement with high-pressure turbine and power turbine**
- **display and control panel with illustrative process schematic**
- **propane gas as fuel**

Gas turbines with free-running power turbines are used primarily as drive systems for widely varying power requirements in power plants and on board ships, locomotives, and motor vehicles.

The ET 794 trainer investigates the behaviour during operation of a system with two independent turbines in a two-shaft arrangement. One turbine (the high-pressure turbine) drives the compressor and the other turbine (the power turbine) supplies the effective power. Changes in power output in the power turbine have no influence on the compressor, which is able to keep running at optimum speed at the best efficiency point.

The trainer includes the following components: compressor, tubular combustion chamber and high-pressure turbine; fuel system; starter and ignition system; lubrication system; power turbine; generator; and measuring and control equipment.

The complete unit is called gas turbine. The gas turbine works as an open cyclic process, with the ambient air being drawn out and fed back in. The high-pressure turbine together with the compressor and the combustion chamber are called gas generator as they produce the required gas for the power turbine. To do so, the ambient air drawn in is brought to a higher pressure in the single-stage radial compressor. When the air enters the combustion chamber, only part of it is used for combustion. This air is decelerated with the aid of a turbulence generator such that the added fuel is able to burn with a stable flame. The greater portion of the air is used to cool the combustion chamber components, and is mixed into the combustion gases at the end of the combustion chamber. This reduces the gas temperature to the permissible inlet temperature of the high-pressure turbine.

The gas flows out of the combustion chamber into the single-stage radial high-pressure turbine and discharges a portion of its energy to the turbine. This energy drives the compressor.

In the power turbine, the gas discharges the remaining portion of its energy, which is converted into mechanical energy and drives a generator. The electrical energy generated is dissipated using braking resistors. The gas turbine is started with the aid of a start-up fan.

The speed, temperatures, and pressures and the mass flow rates of the air and fuel are recorded and displayed using sensors. Typical characteristic variables are determined.

ET 794
Gas turbine with power turbine

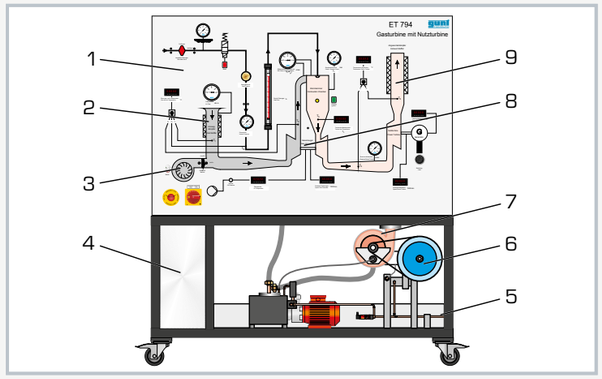

1 process schematic with displays and controls, 2 air intake with silencer, 3 start-up blower, 4 switch cabinet, 5 cooling water connection, 6 generator, 7 power turbine, 8 gas generator (compressor, combustion chamber, high-pressure turbine), 9 exhaust silencer

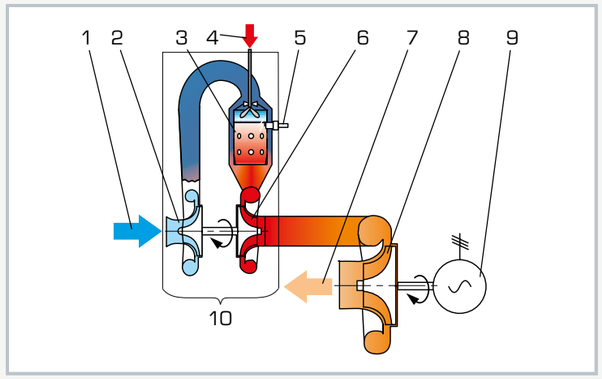

Function schematic of the system: 1 cold air, 2 compressor, 3 tubular combustion chamber, 4 fuel, 5 spark plug, 6 high-pressure turbine, 7 exhaust gas, 8 power turbine, 9 generator, 10 gas generator

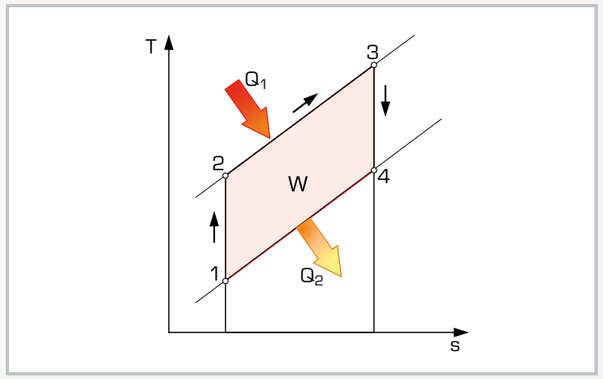

T-s diagram of open gas turbine process: 1 – 2 compression, 2 – 3 heat addition, 3 – 4 expansion; Q_1 heat input, Q_2 heat output, W useful work

Specification

[1] experiments relating to the function and behaviour during operating of a gas turbine in a two-shaft arrangement
[2] operation with power turbine and generator
[3] asynchronous motor with frequency converter as generator
[4] start-up fan to start the high-pressure turbine
[5] conversion of generated electrical energy into heat using four 600W braking resistors
[6] effective silencing at intake and exhaust for laboratory operation
[7] sensors record all relevant data visualised on displays in the process schematic

Technical data

Gas generator (compressor and high-pressure turbine)
- speed range 60000...125000min^{-1}
- max. pressure ratio: 1:2.0
- max. mass flow rate (air): 0,115kg/sec
- max. fuel consumption: 120g/min

Power turbine
- speed range: 10000...40000min^{-1}
- mechanical power: 0...1,5kW
- electrical power: 0...1kW
- sound level at 1m distance: max. 80dB(A)
- temperature exhaust gas 700°C

Measuring ranges
- temperature: 5x 0...180°C / 2x 0...1200°C
- speed: 0...199.999min^{-1}
- electric power: 0...1999W
- air inlet velocity: 0...28m/s
- fuel mass flow rate: 1,5...10,5kg/h
- fuel supply pressure: 0...25bar
- fuel nozzle pressure: 0...4bar
- combustion chamber pressure loss: 0...20mbar
- high-pressure turbine inlet pressure: 0...2,5bar
- power turbine inlet pressure: 0...250mbar

400V, 50Hz, 3 phases
400V, 60Hz, 3 phases
230V, 60Hz, 3 phases
LxWxH: 1500x670x1800mm
Weight: approx. 310kg

Required for operation

cooling water: 200L/h, propane gas: 4...15bar
ventilation 500m^3/h, exhaust gas routing

Scope of delivery

1 trainer
1 set of instructional material

ET 796
Gas turbine jet engine

The illustration shows the jet engine without the protective grating.

Description

- **gas turbine, operated as jet engine**
- **open gas turbine process**
- **GUNT software for data acquisition**

Jet engines are gas turbines which generate thrust. Jet engines are used on aircraft for propulsion due to their low weight and high performance.

The ET 796 trainer investigates the behaviour during operation of a jet engine.

ET 796 includes the following components: jet engine (with compressor, annular combustion chamber, turbine, and propelling nozzle), fuel system, starter and ignition system, and measurement and control equipment. The gas turbine works as an open cyclic process, with the ambient air being drawn out and fed back in.

In the jet engine, the ambient air drawn in is first brought to a higher pressure in the single-stage radial compressor. In the downstream combustion chamber, fuel is added to the compressed air and the resulting mixture is ignited. The temperature and flow velocity of the gas increase.

The gas flows out of the combustion chamber into the single-stage axial turbine and discharges a portion of its energy to the turbine. This turbine drives the compressor. In the propelling nozzle, the partially expanded and cooled gas expands to ambient atmospheric pressure and the gas accelerates to almost the speed of sound. The high-speed gas outflow generates the thrust. In order to reduce the outlet temperature, the exhaust gas stream is mixed with the ambient air in a mixing pipe. The gas turbine is started fully automatically with the aid of an electric starter.

The annular combustion chamber is between the compressor and the turbine. With optimum fuel utilisation, low pressure loss, and good ignition properties, the ring shape of this combustion chamber is typical of the design used in jet engines. The movable turbine platform, with a force sensor, enables measurement of the thrust.

The speed, temperatures, and mass flow rates of the air and fuel are recorded using sensors. The measured values can be read on digital displays. At the same time, the measured values can also be transmitted directly to a PC via USB. The data acquisition software is included.

Learning objectives/experiments

- behaviour during operation of a jet engine including start-up procedure
- determination of the specific thrust
- determination of the specific fuel consumption
- determination of lambda (fuel-air ratio)

ET 796
Gas turbine jet engine

1 mixing pipe, 2 jet engine, 3 turbine platform, 4 force sensor for thrust measurement, 5 fuel tank, 6 gas turbine controls, 7 switch cabinet

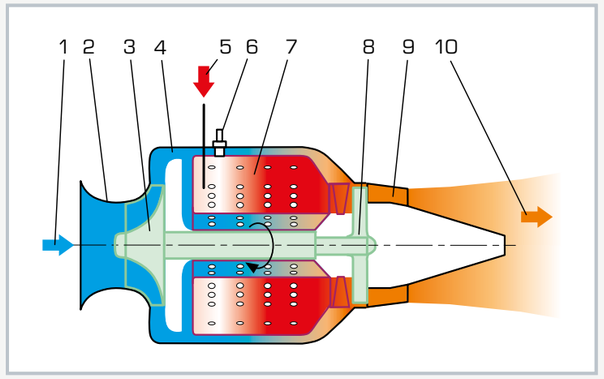

Process schematic: open gas turbine process
1 cold air, 2 housing, 3 compressor, 4 diffuser, 5 fuel, 6 spark plug, 7 annular combustion chamber, 8 turbine, 9 propelling nozzle, 10 exhaust gas

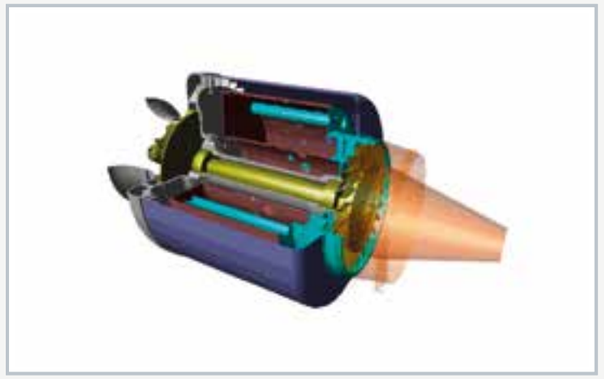

Model of a jet engine

Specification

[1] experiments relating to the function and behaviour during operation of a jet engine
[2] gas turbine with radial compressor and axial turbine as jet engine
[3] single-shaft engine
[4] protective grating for the jet engine
[5] turbine mounted on moving base with force sensor for thrust measurement
[6] electric starter for fully automatic start-up
[7] additional remote control for display and control of the jet engine
[8] GUNT software for data acquisition via USB under Windows 7, 8.1, 10

Technical data

Jet engine
- max. thrust: 82N at 117000min^{-1}
- speed range 35000...117000min^{-1}
- fuel consumption: max. 22L/h (full load)
- exhaust gas temperature: 610°C
- sound level at 1m distance: max. 130dB(A)

Fuel: kerosene or petroleum + turbine oil
Starting system: electric starter
1 tank for fuel: 5L

Measuring ranges
- differential pressure: 0...150mbar
- pressure: 0...2,5bar (combustion chamber)
- temperature: 2x 0...1200°C / 1x 0...400°C
- speed: 0...120000min^{-1}
- consumption: 0...25L/h (fuel)
- force: 0...+/-200N

230V, 50Hz, 1 phase
230V, 60Hz, 1 phase
120V, 60Hz, 1 phase
UL/CSA optional
LxWxH: 1230x800x1330mm
Weight: approx. 112kg

Required for operation

ventilation 1000m^3/h, exhaust gas routing required
PC with Windows recommended

Scope of delivery

1 trainer
1 turbine oil (250mL)
1 GUNT software CD + USB cable
1 set of instructional material
1 manufacturer's instruction manual (turbine)

Basic knowledge

Compressors

Compressors are used for compressing and pumping gases. Their higher pressure ratio distinguishes them from fans.

There are different types of compressor, depending on the area of application. The most important ones are briefly explained here.

The characteristics of compressors include:

- delivery quantity – volume of the delivered fluid/time
- operating pressure – attainable positive pressure
- pressure ratio Π = final pressure / suction pressure
- volumetric efficiency – conveyed volumetric flow rate / theoretical (due to geometry) possible volumetric flow rate

Turbo compressors

- a type of driven turbomachine, the energy is transferred from the compressor to the fluid via flow forces
- depending on the direction of fluid flow, a distinction is made between radial and axial compressors
- can compress very high volumetric flow rates, very high flow velocities can be achieved (transonic compressors)
- **design:** housing with control unit, shaft with one or more rotors and blades
- **applications:** in gas turbines, jet engines or fans for hot-blast furnaces in steel mills, in exhaust gas turbochargers in internal combustion engines

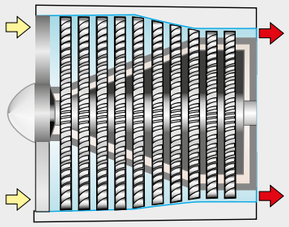

Screw compressors (comparable to screw pumps)

- work according to the positive displacement principle
- are characterized by very continuous delivery without pulsation and can generate very high pressures
- **design:** their housing contains two or more rotors that rotate in opposite directions, with an external screw thread profile. As the threads of the screws engage, the fluid is transported.
- **applications:** industrial use in large plants for the production of compressed air or in refrigeration technology

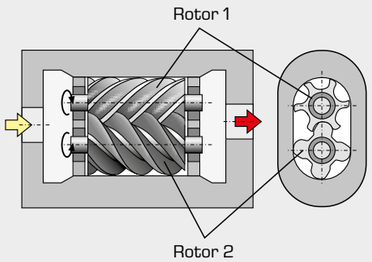

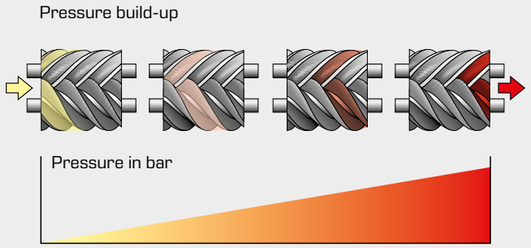

Scroll compressors

- a type of driven positive displacement machine, the energy is transferred from the compressor to the fluid via a variable volume
- **design and functionality:** two intertwining/interlocking spirals with a minimum distance from each other. One spiral is stationary (stator), the other one (rotor) follows a circular trajectory. This movement causes two chambers to be formed whose volume is continuously reduced. The inlet for the fluid/gas to be pumped is on the outside, the outlet for the compressed gas is in the middle of the spirals. The pairs of spirals do not touch each other and can therefore work without lubricant.
- **applications:** e.g. refrigeration plants or heat pumps

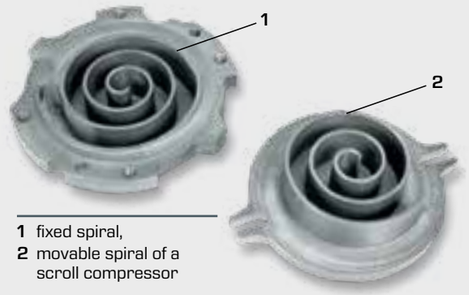

1 fixed spiral,
2 movable spiral of a scroll compressor

inlet, low pressure,
outlet, high pressure,
fixed spiral,
orbiting spiral

Piston compressors

- a type of driven positive displacement machine, the energy is transferred from the compressor to the fluid via a variable volume
- **design and functionality:** together with the cylinder and cylinder cover, the piston (displacer) forms a closed space with variable volumes. A crank mechanism generates the periodic reciprocating movement of the piston in the cylinder. Automatic valves in the cylinder cover allow the fluid to flow into and out of the cylinder chamber. The operation is comparable to that of a petrol engine.
- **applications:** gas compression, high pressure, starting internal combustion engines, most commonly used

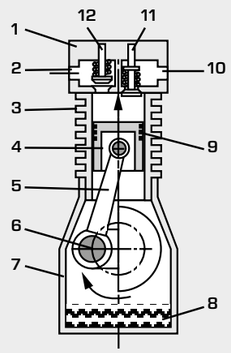

1 cylinder head,
2 air vent,
3 cylinder with cooling fins,
4 piston,
5 crank rod,
6 crankshaft,
7 crankcase,
8 oil pan,
9 piston rings,
10 air inlet,
11 inlet valve,
12 outlet valve

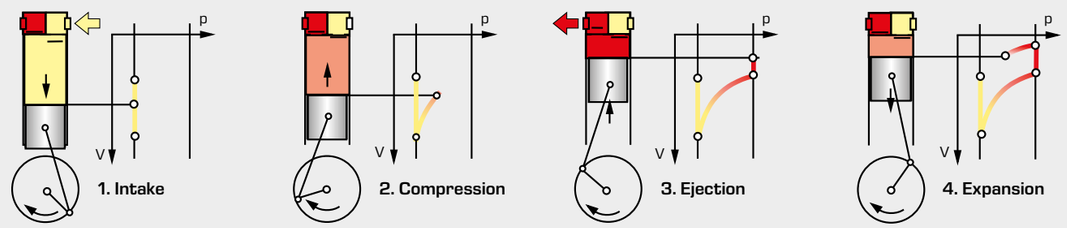

ET 500
Two-stage piston compressor

Description

- **two-stage compressor with intercooler**
- **compression process on a p-V diagram**

Compressed air for industry and businesses that use compressed air as an energy source is generated by means of so-called compressed air generation systems. A key component of these systems is the compressor. It converts the supplied mechanical energy into a higher air pressure. Compressed air generation systems are used to drive machines in mining, for pneumatic control systems in assembly plants or tyre inflation systems at petrol stations.

ET 500 includes a complete compressed air generation system with a two-stage compressor and an additional pressure vessel as intercooler. The trainer enables the recording of compressor characteristics and representing the compression process in a p-V diagram.

The air is sucked into the intake vessel through a measuring nozzle and calmed there before it is compressed in two stages. The additional pressure vessel for intercooling is located between the first and second stage. After the second stage, the compressed air is pressed into another pressure vessel through a cooling tube. To achieve a steady state, the compressed air can be released through a blow-off valve with silencer. Safety valves and a pressure switch complete the system.

Sensors measure the pressures and temperatures in both stages as well as the electric power consumption. A nozzle at the intake vessel serves to determine the intake volumetric flow rate. The measured values can be read on digital displays. At the same time, the measured values can also be transmitted directly to a PC via USB. The data acquisition software is included.

Learning objectives/experiments

- design and function of a two-stage compressor
- measurement of relevant pressures and temperatures
- determination of the intake volumetric air flow rate
- compression process on a p-V diagram
- determination of the efficiency

ET 500
Two-stage piston compressor

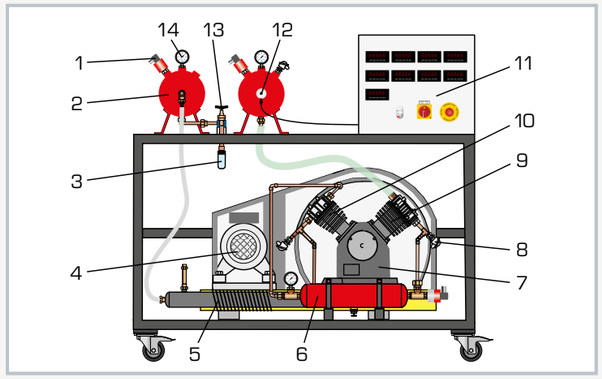

1 pressure sensor, 2 pressure vessel after 2 nd compressor stage, 3 outlet valve with silencer, 4 drive motor, 5 intercooler, 6 pressure vessel after 1st compressor stage (intermediate reservoir), 7 piston compressor, 8 temperature sensor, 9 compressor (1st stage), 10 compressor (2nd stage), 11 switch cabinet, 12 intake vessel with measuring nozzle, 13 safety valve, 14 manometer

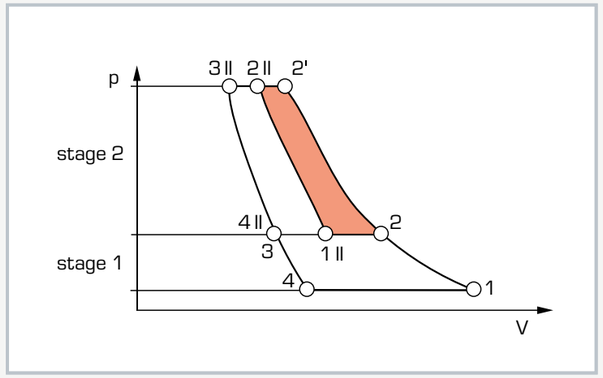

Two-stage compression process with intermediate cooling (2-1II) in p-V diagram
red: benefit compared to single-stage process

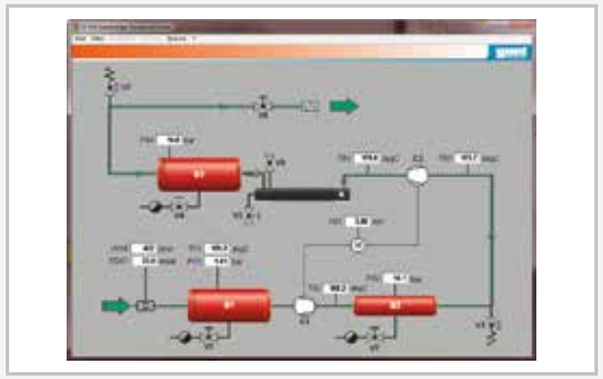

Software screenshot: process schematic of a two-stage piston compressor

Specification

[1] recording the characteristic of a two-stage compressor
[2] piston compressor with 2 cylinders in V-arrangement
[3] intake vessel with nozzle to measure the intake volumetric flow rate, pressure sensor and additional manometer
[4] pressure vessel after the first stage as intercooler
[5] pressure vessel after the second stage with safety valve, blow-off valve and silencer as well as an additional manometer and a pressure switch
[6] sensors for pressures, temperatures and electric power output
[7] digital displays for temperatures, pressures, differential pressures and electric power output
[8] GUNT software for data acquisition via USB under Windows 7, 8.1, 10

Technical data

Compressor
- two-stage
- with 2 cylinders in a V-arrangement
- power consumption: 3kW
- speed: 710min^{-1}
- intake capacity: 250L/min
- quantity delivered: 202L/min (at 12bar)
- operating pressure: 12bar, max. 35bar

Intake vessel: 20L
Pressure vessels, 16bar; capacity:
- after 1st stage: 5L
- after 2nd stage: 20L

Safety valve: 16bar

Measuring ranges
- differential pressure: 0...25mbar
- pressure: 1x 0...1,5bar; 2x 0...16bar
- temperature: 4x 0...200°C
- power: 0...3500W

400V, 50Hz, 3 phases
400V, 60Hz, 3 phases
230V, 60Hz, 3 phases
UL/CSA optional
LxWxH: 1770x800x1520mm
Weight: approx. 304kg

Required for operation

PC with Windows recommended

Scope of delivery

1 trainer
1 GUNT software CD + USB cable
1 set of instructional material

ET 513
Single-stage piston compressor

Learning objectives/experiments

- setup and operating behaviour of a compressed air generation system with single-stage piston compressor
- determination of the characteristic curve
- determination of the volumetric efficiency
- determination of the mechanical efficiency

Description

- **single-stage piston compressor**
- **part of the GUNT-FEMLine**
- **setup of a complete compressor unit in combination with the universal drive and brake unit HM 365**

The generation of compressed air for industrial and commercial purposes in areas where compressed air is used as a source of energy requires what are known as compressed air generation plants. A central part of these systems is the compressor. It is responsible for generating a pressure increase of the air by means of mechanical energy. Compressed air generation plants are used to power machines in the mining industry, for pneumatic control systems in assembly facilities or as tyre inflation units at petrol stations.

The single-stage piston compressor in ET 513 and the drive unit HM 365 together form a complete compressed air generation system.

The drive unit HM 365 powers the compressor by means of a V-belt. The speed of the compressor is set on HM 365. The air is sucked into the intake vessel, where it settles before it is compressed inside the compressor. The compressed air is then delivered to a pressure vessel and is available as a working medium. To set a steady flow operating mode, the compressed air can be discharged over a blow-off valve with a silencer. A pressure switch with a solenoid valve for limiting the pressure and a safety valve complete the system.

A measuring nozzle at the intake vessel is used to determine the suction volumetric flow rate. Sensors record the pressures and temperatures in front of and behind the compressor. The pressure is also displayed on manometers in the tanks. The measured values are read from digital displays and can be transmitted simultaneously via USB directly to a PC, where they can be analysed using the software included. The speed and torque measurement is integrated in HM 365.

ET 513
Single-stage piston compressor

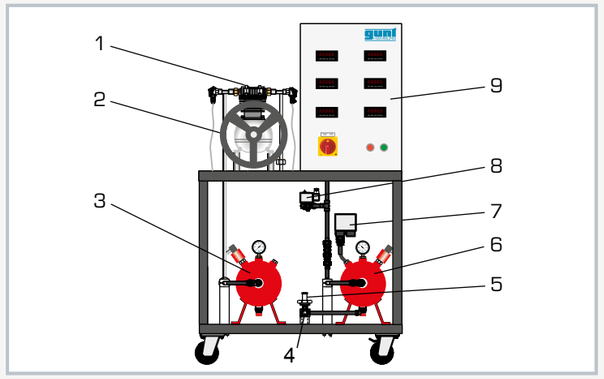

1 compressor, 2 V-belt pulley, 3 intake vessel, 4 blow-off valve with silencer, 5 safety valve, 6 pressure vessel, 7 pressure switch, 8 solenoid valve, 9 switch cabinet with digital displays

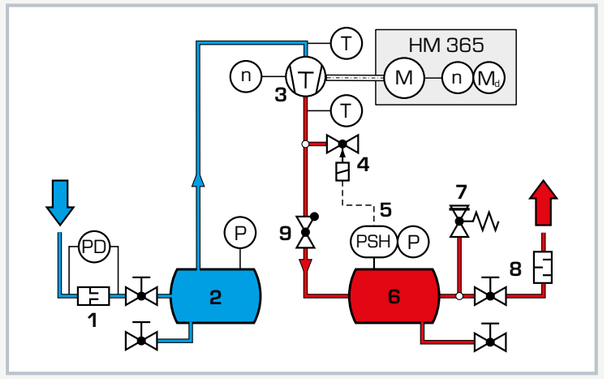

1 measuring nozzle, 2 intake vessel, 3 piston compressor, 4 solenoid valve, 5 pressure switch, 6 pressure vessel, 7 safety valve, 8 blow-off valve with silencer,9 non-return valve; P pressure, PD differential pressure, T temperature, n speed, M_d torque

The illustration shows a complete experimental setup with ET 513 and HM 365

Specification

[1] investigation of a driven machine for compressed air generation
[2] single-stage piston compressor with one cylinder
[3] drive and speed adjustment via HM 365
[4] intake vessel with measuring nozzle for determination of the suction volumetric flow rate
[5] intake vessel and pressure vessel, both with pressure sensor and additional manometer
[6] safety valve and pressure switch with solenoid valve for limiting the pressure
[7] blow-off valve with silencer for setting a steady flow operating mode
[8] pressure and temperature sensors in front of and behind the compressor
[9] digital display for air flow rate, temperatures, pressures, differential pressures and compressor speed
[10] GUNT software for data acquisition via USB under Windows 7, 8.1, 10

Technical data

Compressor, 1 cylinder, single-stage
- power consumption: 750W
- nominal speed: 980min^{-1}
- positive operating pressure: 8bar
- max. pressure: 10bar
- intake capacity: 150L/min at 8bar
- borehole: 65mm
- stroke: 46mm

Safety valve: 10bar
Pressure vessel
- 16bar
- volume: 20L

Intake vessel: 20L

Measuring ranges
- temperature: 1x 0...200°C / 1x 0...100°C
- pressure: 0...16bar / -1...1bar
- flow rate: 0...150L/min
- speed: 0...1000min^{-1}

230V, 50Hz, 1 phase
230V, 60Hz, 1 phase
120V, 60Hz, 1 phase
UL/CSA optional
LxWxH: 900x800x1510mm
Weight: approx. ca. 130kg

Required for operation

PC with Windows recommended

Scope of delivery

trainer, 1 CD with GUNT software + USB cable, 1 V-belt, 1 V-belt guard, 1 set of instructional material

ET 432
Behaviour of a piston compressor

Description

- **open two-cylinder piston compressor from refrigeration**
- **record of the pressure/volumetric flow rate characteristic**
- **measurement of intake volume and pressure ratio**
- **determination of volumetric and mechanical efficiency**
- **GUNT software for data acquisition**

Smaller refrigeration systems usually have a piston compressor. Piston compressors are positive displacement machines. These differ in their characteristics decisively from flow equipment which include the turbo compressors that are common in very large systems.

In piston compressors the flow rate is mainly dependent on the displaced volume and speed. Due to the unavoidable dead space the flow rate drops with increasing pressure ratio. Because the flow rate is a measure for the refrigeration capacity of the refrigeration system, the properties of the compressor are important for the capacity of the whole system.

In this trainer a commercial open refrigerant compressor is operated in an open process with air. The inlet and outlet pressures and thus the pressure ratio can be adjusted via valves in wide ranges. The drive via a frequency converter permits variable speeds. Pressures, temperatures, electric power consumption, speed and torque are recorded. The measured values are transmitted directly to a PC via USB. The data acquisition software is included.

Learning objectives/experiments

- determine characteristic variables of a piston compressor during experiments
- record of the pressure/volumetric flow rate characteristic
- determination of the volumetric efficiency at different intake pressures, pressure ratios and speeds
- determination of the isothermal compressor capacity
- measurement of the mechanical and electrical power consumption in dependence of the intake pressure and pressure ratio
- determination of the mechanical efficiency and the overall efficiency

ET 432
Behaviour of a piston compressor

1 displays and controls, 2 flow meter, 3 refrigerant compressor, 4 stabilisation tank, 5 drive motor with torque measurement, 6 manometer, 7 oil separator, 8 pressure switch, 9 valve

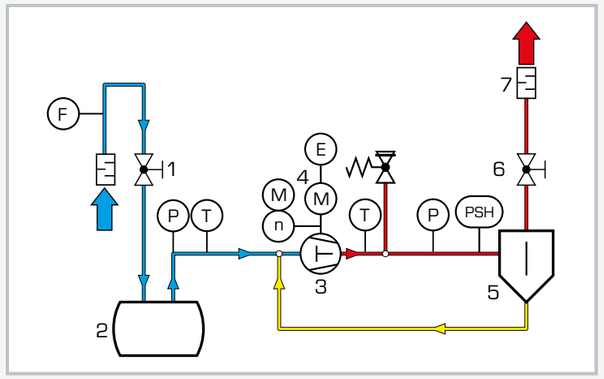

1 intake side valve, 2 stabilisation tank, 3 compressor, 4 drive motor, 5 oil separator, 6 delivery side valve, 7 silencer; F flow rate, T temperature, P pressure, M torque, n speed, E electric power, PSH pressure switch; blue: low pressure, red: high pressure, yellow: oil return

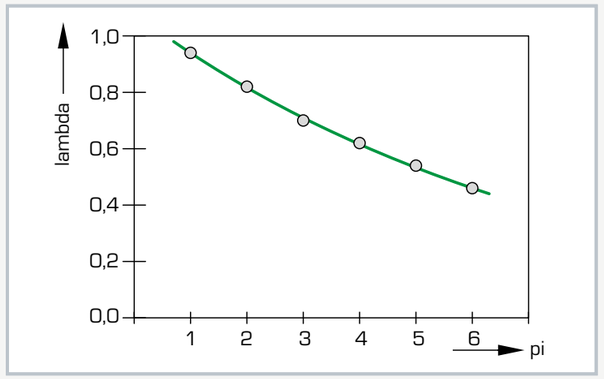

Progression of the volumetric efficiency lambda in dependence on the pressure ratio pi

Specification

[1] experimental unit for piston compressor from refrigeration
[2] open process with air
[3] typical open two-cylinder compressor
[4] drive via asynchronous motor with frequency converter for speed adjustment
[5] inlet pressure and outlet pressure (pressure ratio) adjustable via valves
[6] instruments: 2 manometers, flow meter, sensors for pressure, temperature, speed, torque (via force), flow rate, digital power indication
[7] GUNT software for data acquisition via USB under Windows 7, 8.1, 10

Technical data

Compressor
- speed: 465...975min^{-1}
- number of cylinders: 2
- stroke: 26mm
- borehole: 35mm
- displaced volume: 50cm^3
- max. displacement: 2,92m^3/h (at 1450min^{-1} motor speed)

Drive motor
- power: 550W
- speed: 0...1400min^{-1}

Measuring ranges
- torque: 0...10Nm
- speed: 0...2500min^{-1}
- power: 0...600W
- temperature: 1x 0...100°C, 1x 0...200°C
- flow rate: 0,4...3,2Nm^3/h
- pressure:
  - pressure sensor: -1...1,5bar / -1...24bar
  - manometer: -1...9bar / -1...24bar

230V, 50Hz, 1 phase
230V, 60Hz, 1 phase
120V, 60Hz, 1 phase
UL/CSA optional
LxWxH: 1510x790x1750mm
Weight: approx. 148kg

Required for operation

PC with Windows recommended

Scope of delivery

1 trainer
1 GUNT software CD + USB cable
1 set of instructional material

ET 508
Simulation of a two-stage air compressor

Description

- **simulated compressor plant with intermediate and aftercooling**

When operating real compressor plants in industry, the specified process parameters must be adhered to. Certain operating conditions must be avoided in order to prevent damage to the plant.

The ET 508 experimental unit is a simulation device which students can use to safely familiarise themselves with the different operating states of a two-stage compressor plant. Boundary conditions and their consequences can be simulated. The significance of clearance volume and re-expansion are demonstrated. The plant's response can be tested by deliberately changing the process parameters.

Nine different process parameters can be set via potentiometers on the control unit of the experimental unit. The process parameters control the software. The process parameters include, among other things, cubic capacity, clearance volume, speed or intake state of the air.

The software offers a wide range of display options. The consequences of changes in the settings on the potentiometers can be observed directly in the software displays. For example, the compression process can be displayed in the p-V diagram. The thermodynamic conditions can be displayed in the T-s diagram. Single-stage and multi-stage compression can be compared. Intake air volume, compressor stroke and pressure ratio of the respective stage, convective heat transfer during condensation and air flow rate are calculated in the software.

The experimental unit is connected to a PC via USB. The power supply is provided by the PC.

Learning objectives/experiments

- fundamentals of the multi-stage compression process
- characteristics of a multi-stage compressor
- thermodynamic state variables
- representation of the compression process in the T-s diagram and in the p-V diagram
- condensation in the intercooler and aftercooler
- 2-point pressure control with hysteresis

ET 508
Simulation of a two-stage air compressor

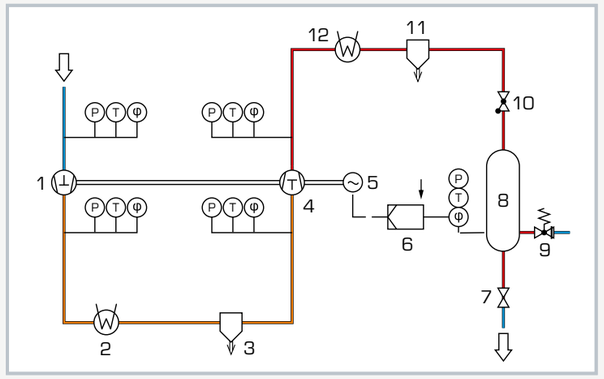

1 compressor, 2 heat exchanger for intercooling, 3 separator, 4 compressor, 5 motor, 6 pressure controller, 7 expansion valve, 8 pressure vessel, 9 safety valve, 10 non-return valve, 11 separator, 12 heat exchanger for aftercooling;
P pressure, T temperature, φ humidity; blue: low pressure, orange: average pressure, red: high pressure

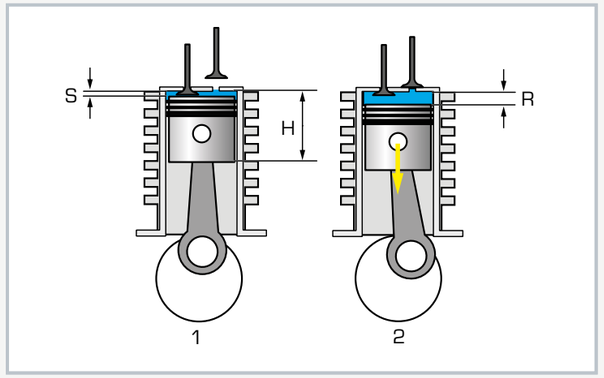

Principle of re-expansion;
1 top dead centre: residual air remains in the clearance volume, 2 start of downward movement: this air expands to the atmospheric pressure before the suction valve opens; S clearance volume, H displacement, R re-expansion

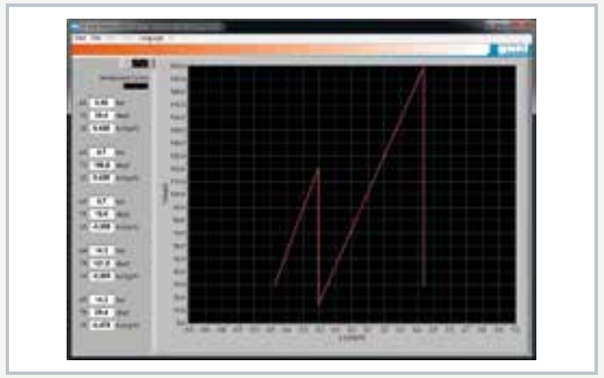

Software screenshot

Specification

[1] simulated operation of a two-stage compressor plant with intermediate and aftercooling
[2] change 9 system parameters via potentiometers
[3] software calculates: intake air volume, temperatures, pressures, pressure ratio stage 1+2, convective heat transfer during condensation, delivered air volume
[4] GUNT software for data acquisition via USB under Windows 7, 8.1, 10

Technical data

9 potentiometers for setting
- intake pressure: 0...2bar abs.
- intake temperature: 0...100°C
- relative air humidity: 0...100%
- coolant mass flow: 0...100kg/h at 15°C
- flow control valve position: 0...100%
- tank nominal pressure: 0...50bar
- motor speed: 0...1000min^{-1}
- tank volume: 0...1000L
- relative clearance volume: 0...100%

Inputs and outputs
- 16x analogue in, 1x analogue out
- each 4x digital in/out

LxWxH: 600x350x480mm
Weight: approx. 15kg

Required for operation

PC with Windows

Scope of delivery

1 experimental unit
1 GUNT software CD + USB cable
1 manual

ET 512
Compressed air generation plant with piston compressor

Description

- **compact compressed air generation plant**
- **single-stage piston compressor**
- **recording the compressor characteristic curve**

Compressed air generation plants are used to apply compressed air as a source of energy. Compressed air is used instead of electrical energy in mining or in the chemical industry because there is a danger of explosion due to flammable gases. The central component of such plants is the compressor.

The ET 512 experimental unit contains all the components of a compressed air generation plant: a single-stage piston compressor, driven by an electric motor via a V-belt, a compressed air tank with manometer, pressure switch and safety valve. Any consumer can be connected to the compressed air tank via a quick-release coupling.

The ET 512 unit can also be used to test the function of the piston compressor. During the functional test, the pressure rise in the tank over time is recorded as a measure of the compressor's capacity.

A power meter records the drive motor data. The effective power is shown on a digital display. A stopwatch is included for time-dependent measurements.

Learning objectives/experiments

- familiarisation with a compressed air generation plant
- function test on a single-stage piston compressor
  - pressure rise in the compressed air tank over time
  - effective power of the drive motor as a function of pressure

Specification

[1] familiarisation with a compressed air generation plant
[2] single-stage piston compressor
[3] pressure vessel with manometer, safety valve, valve for drainage and connection for consumers
[4] digital display to show voltage, current, effective power

Technical data

Piston compressor, 1 cylinder, single-stage
- max. delivery pressure: 10bar
- intake capacity: 115L/min
- bore: 50mm
- stroke: 32mm
- displaced volume: 63cm^3

Drive motor
- power consumption: 0,25kW
- speed: 1405min^{-1}

Pressure vessel
- content: 10L
- max. pressure: 10bar

Measuring ranges
- power consumption: 0...4kW
- manometer: 0...16bar
- stopwatch: 1/100s

230V, 50Hz, 1 phase
120V, 60Hz, 1 phase
LxWxH: 750x540x560mm
Weight: approx. 38kg

Scope of delivery

1 experimental unit
1 set of instructional material

First-rate handbooks

GUNT's policy is simple: high quality hardware and clearly developed accompanying instructional material ensure successful teaching and learning about an experimental unit.

The core of the accompanying material are detailed reference experiments that we have carried out. The description of the experiment contains the actual experimental setup right through to the interpretation of the results and findings. A group of experienced engineers develops and maintains the instructional material.

Nevertheless, we are here to help should any questions remain unanswered, either by phone or – if necessary – on site.

Basic knowledge

Internal combustion engines

Internal combustion engines are thermal fluid energy machines: they generate mechanical energy by burning a mixture of fuel and air. All work processes take place inside a working area: the cylinder. Since the force / energy within the cylinder is transferred by means of a variable volume, internal combustion engines are part of the group of positive displacement machines.

Motors or engines are often used to power motor vehicles, ships or locomotives. They are also used for drives that must be reliable and independent of the electrical power supply, such as emergency backup generators, construction machines or agricultural machinery.

Small single-cylinder engines are perfect for demonstrating the fundamentals of engine technology. GUNT offers various internal combustion engines with capacities of up to 75 kW, including real car engines with a volumetric displacement of up to two litres. Among these engines are four-stroke diesel and petrol engines, petrol engines with variable compression and two-stroke petrol engines.

Comparison of engines: 2-stroke petrol engine, 4-stroke petrol engine, 4-stroke diesel engine

	2-stroke petrol engine	4-stroke petrol engine	4-stroke diesel engine
Load	air / fuel mixture	air / fuel mixture	pure air
Fuel supply	carburettor	carburettor	injector nozzle
Ignition	ignition spark	ignition spark	compression
Compression ratio	5...8	5...12	14...21
Fuel-air ratio	0,8...1,2	0,8...1,2	1,5...10
Fuel	petrol	petrol	diesel

2-stroke engine: one work cycle = one crank revolution

1st stroke: compression/intake

The piston moves upward: from bottom dead centre to top dead centre

Processes above the piston:
The precompressed mixture is further compressed above the piston. The compressed mixture is ignited shortly before the top dead centre is reached.

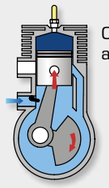

Compression and intake

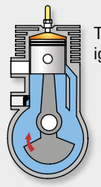

Top dead centre: ignition

Processes below the piston:
The transfer port is closed as the piston travels upwards. Due to the resulting negative pressure the inlet valve opens: The fuel and air mixture is drawn in.

2nd stroke: power / precompression

Downward motion of the piston: from top dead centre to bottom dead centre

Processes above the piston: The resulting pressure forces the piston downward and opens first the outlet channel and then the transfer port. The precompressed mixture under the piston pushes the accumulated exhaust fumes out and fills the cylinder.

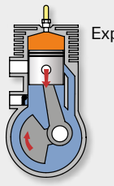

Expansion

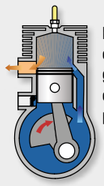

Bottom dead centre gas exchange: exhaust and purging

Processes below the piston:
The mixture that was sucked in is precompressed by the upward motion of the piston and pressed into the transfer port. The positive pressure closes the inlet valve.

Indicator diagram of a 2-stroke engine

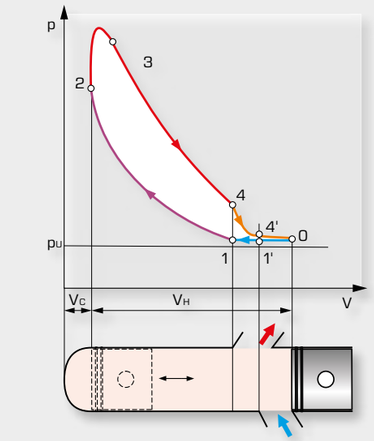

1st stroke (0 - 1): the cylinder is charged with the fuel / air mixture,
(1 - 2): compression of the mixture,
(2 - 3): ignition and combustion of the mixture,
2nd stroke (3 - 4): expansion of the combustion gases,
4 : exhaust opens, expansion is finished
4': transfer port opens, purging starts
1': purging is finished
1 : exhaust closes and compression starts

intake, compression, power, exhaust;
p_U ambient pressure, **V** volume,
V_H displaced volume, V_C compression volume

4-stroke engine: one work cycle = two crank revolutions

1st stroke: intake

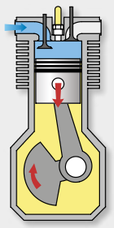

The piston moves from the top to the bottom dead centre. As it does, the fuel and air mixture is sucked in.

2nd stroke: compression

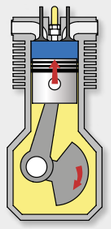

The piston moves from the bottom to the top dead centre. As it does, the fuel and air mixture is compressed.

3rd stroke: power – ignition and expansion

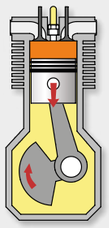

The compressed fuel and air mixture is ignited shortly before the top dead centre is reached. The resulting pressure presses the piston downwards.

4th stroke: exhaust

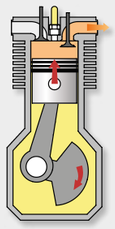

The piston moves from the bottom to the top dead centre. As it does, the exhaust gases are discharged.

Indicator diagram of a 4-stroke engine

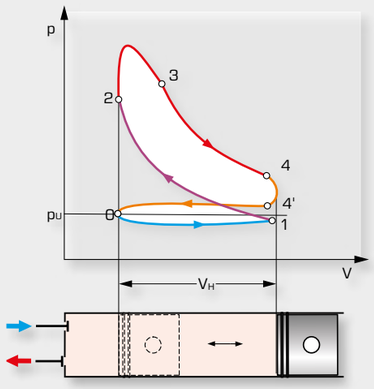

1st stroke (0 - 1): intake
- of the fuel and air mixture in a petrol engine,
- of pure air in a diesel engine

2nd stroke (1 - 2): compression
- of the fuel and air mixture in a petrol engine,
- of air to a least 700°C in a diesel engine

3rd stroke (2 - 3): ignition and combustion
- of the fuel and air mixture in a petrol engine (spark plugs),
- injection of diesel oil, ignition caused by high air temperature

(3 - 4): expansion of the combustion gases
4th stroke (4 - 4'): exhaust of the combustion gases
(4' - 0): expulsion of the remaining combustion gases

Test stands for internal combustion engines

GUNT offers four different test stands for internal combustion engines in the **2,2 kW to 75 kW** power range. The engines include four-stroke diesel and petrol engines, petrol engines with variable compression ratios and two-stroke petrol engines.

The engines are supplied with fuel and air via the test stands. The exhaust gases can be studied using an exhaust gas analyser.

The **electronic indicating system** is a good way to gain an in-depth understanding of how an engine works. Special pressure sensors record the pressure in the cylinder chamber. These data provide important information on the combustion process in the engine. In industrial applications, indicating systems are used to optimise the combustion process. The data are used to create the **indicator diagram**.

The indicating system helps identify the individual strokes of the engine. The process of **ignition** or an **ignition attempt**, and the **gas exchange** can be examined. Cranking without ignition can be simulated while examining the processes inside the cylinder chamber. The **idling behaviour** of diesel and petrol engines can be compared. The indicating system can be used to carry out a thermodynamic analysis of the engine.

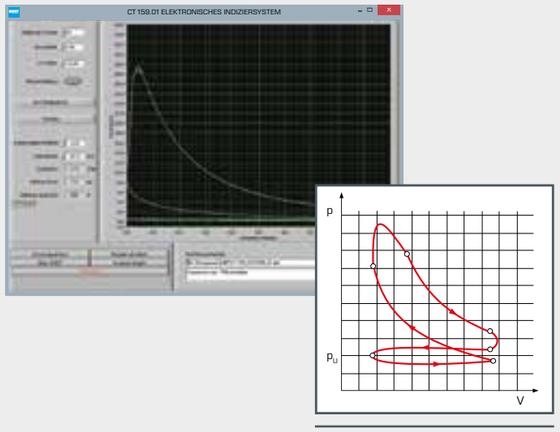

Indicator diagram of a 4-stroke engine

Modern GUNT software for Windows with comprehensive visualisation functions:

- process schematic for all engines with real-time display of all measured and calculated variables
- display of up to four characteristics at the same time
- representation of characteristics: select any assignment for the axes of the diagram
- storage of measuring data
- selection between four preset languages
- easy connection to a PC via USB
- calculated variables
  - specific fuel consumption
  - intake air volumetric flow rate
  - mechanical power
  - efficiency
  - volumetric efficiency
  - fuel-air ratio **λ**

CT 159
Modular test stand for single-cylinder engines, 2,2 kW

CT 110
Test stand for single-cylinder engines, 7,5 kW

CT 300
Engine test stand, 11 kW

CT 400
Load unit, 75 kW, for four-cylinder engines

2,2 kW — 7,5 kW — 11 kW — 75 kW

CT 159
Modular test stand for single-cylinder engines, 2,2 kW

The series CT 159 offers four different internal combustion engines in the power range up to 2,2 kW: A four-stroke diesel and petrol engine, a petrol engine with adjustable compression ratio and a two-stroke petrol engine. The engines are supplied with fuel and air via a modular test stand, CT 159. The exhaust fumes are discharged to the outside via hoses.

The engines are connected to the HM 365 Universal drive and brake unit by a V-belt. HM 365 is first used to start the engines.

While the engines are running, HM 365 is operated in generator mode, thus braking the engines. The engines can be examined under full load or under partial load conditions. The characteristic diagram is determined with variable load and speed. The interaction of the brake and engine can also be examined in this context.

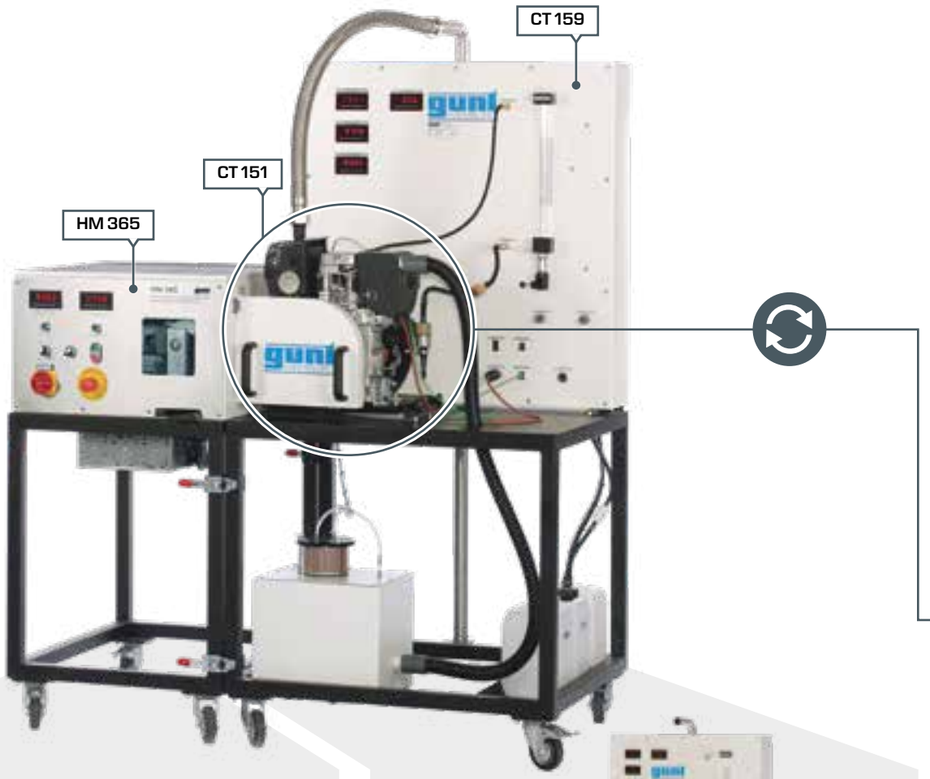

HM 365 Universal drive and brake unit

CT 159 Modular test stand for single-cylinder engines, 2,2 kW

HM 365 + CT 159 + test engine (CT 150 – CT 153) incl. software for data acquisition

- characteristics for full and partial load
- determination of friction loss in the engine
- comparison of diesel and petrol engines
- comparison of 2-stroke and 4-stroke engines
- 4-stroke petrol engine with variable compression

CT 150
Four-stroke petrol engine
Air-cooled, single-cylinder, 4-stroke petrol engine with external carburation

CT 151
Four-stroke diesel engine
Air-cooled, single-cylinder, 4-stroke diesel engine with direct injection

CT 152 Four-stroke petrol engine with variable compression
Air-cooled, single-cylinder, 4-stroke petrol engine:

- variable compression ratios that can be set by changing the combustion chamber geometry
- adjustable ignition point and variable carburettor jet

CT 153
Two-stroke petrol engine
Air-cooled, single-cylinder, 2-stroke petrol engine with diaphragm carburettor

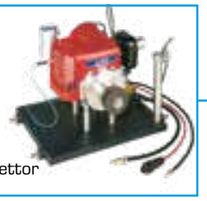

Extended range of experiments

with

electronic indication including software for data acquisition with CT 159.01 + engine-specific pressure transducer with TDC sensor (CT 159.03 – CT 159.05)

CT 159.03
Pressure transducer and TDC sensor

CT 159.04
Pressure transducer and TDC sensor

CT 159.03
Pressure transducer and TDC sensor

CT 159.05
Pressure transducer and TDC sensor

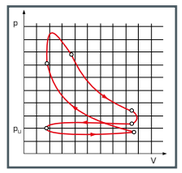

CT 159.01
Electronic engine indicating system for CT 159
Pressure measurement in the cylinder chamber of an internal combustion engine

- p-V diagram
- p-t diagram
- pressure curve during gas exchange
- determination of the indicated performance
- determination of mechanical efficiency

and/or

exhaust gas analysis with CT 159.02

CT 159.02
Exhaust gas analysing unit
Measurement of the composition of exhaust gases (CO, CO_2, HC, O_2), the fuel/air ratio **λ** and the oil temperature of the engine.

CT 150
Four-stroke petrol engine for CT 159

Learning objectives/experiments

- in conjunction with CT 159 test stand + HM 365 load unit
  - familiarisation with a four-stroke petrol engine
  - plotting of torque and power curves
  - determination of specific fuel consumption
  - determination of volumetric efficiency and lambda (fuel-air ratio)
  - determination of the frictional power of the engine

Specification

[1] air-cooled single-cylinder four-stroke petrol engine for installation in the CT 159 test stand
[2] engine mounted on vibration-insulated base plate
[3] force transmission to brake via pulley
[4] engine complete with fuel hose and exhaust gas temperature sensor
[5] fuel hose with self-sealing quick-release coupling

Technical data

Air-cooled single-cylinder petrol engine
- power output: 2,2kW at 3200min^{-1}
- bore: 62mm
- stroke: 42mm

Belt pulley: Ø 125mm

LxWxH: 450x360x380mm
Weight: approx. 22kg

Description

- **engine for installation in the CT 159 test stand**
- **part of the GUNT-FEMLine**

In conjunction with the CT 159 test stand and the HM 365 load unit, the simple four-stroke petrol engine is highly suitable for use in teaching the fundamentals of engine functioning and measurement.

The engine used here is an air-cooled single-cylinder four-stroke petrol engine with external carburation. The engine is started by an electric motor mounted in the HM 365 unit. The air cooling is effected by a flywheel fan. The HM 365 load unit is coupled by way of a pulley on the drive shaft.

The engine includes a sensor to measure the exhaust gas temperature. The sensor, ignition cut-off as well as air and fuel supply are connected to the CT 159 test stand.

The full load and partial load characteristic curves of the engine are plotted in experiments.

Scope of delivery

1 engine, complete with all connections and supply lines
1 manual

CT 151
Four-stroke diesel engine for CT 159

Learning objectives/experiments

- in conjunction with CT 159 test stand and HM 365 load unit
  - familiarisation with a four-stroke diesel engine
  - plotting of torque and power curves
  - determination of specific fuel consumption
  - determination of volumetric efficiency and lambda (fuel-air ratio)
  - determination of the frictional power of the engine

Specification

[1] air-cooled single-cylinder four-stroke diesel engine for installation in the CT 159 test stand
[2] engine mounted on vibration-insulated base plate
[3] force transmission to brake via pulley
[4] engine complete with fuel hose and exhaust gas temperature sensor
[5] fuel hose with self-sealing quick-release coupling

Technical data

Air-cooled single-cylinder diesel engine
- power output: 1.5kW at 3000min^{-1}
- bore: 69mm
- stroke: 62mm

V-belt: Ø 125mm

LxWxH: 430x350x350mm
Weight: approx. 38kg

Description

- **engine for installation in the CT 159 test stand**
- **part of the GUNT-FEMLine**

In conjunction with the CT 159 test stand and the HM 365 load unit, the air-cooled four-stroke diesel engine is highly suitable for use in teaching the fundamentals of engine functioning and measurement.

The engine used here is an air-cooled single-cylinder four-stroke diesel engine with direct injection. The engine is started by an electric motor mounted in the HM 365 unit. The air cooling is effected by a flywheel fan. The HM 365 load unit is coupled by way of a pulley on the drive shaft. The engine includes a sensor to measure the exhaust gas temperature. The sensor, ignition cut-off as well as air and fuel supply are connected to the CT 159 test stand.

The full load and partial load characteristic curves of the engine are plotted in experiments.

Scope of delivery

1 engine, complete with all connections and supply lines
1 manual

CT 152
Four-stroke petrol engine with variable compression for CT 159

Learning objectives/experiments

- in conjunction with CT 159 test stand + HM 365 load unit, in addition to the standard basic experiments
  - influence of compression ratio, mixture composition, ignition timing on engine characteristics and exhaust gas temperature

Specification

[1] air-cooled single-cylinder four-stroke petrol engine for installation in the CT 159 test stand
[2] 5 variable compression ratios, adjustable by varying the combustion chamber geometry
[3] adjustable ignition point
[4] mixture composition adjustable
[5] engine mounted on vibration-insulated base plate
[6] force transmission to brake via pulley
[7] engine complete with fuel hose and exhaust gas temperature sensor
[8] fuel hose with self-sealing quick-release coupling

Technical data

Air-cooled single-cylinder petrol engine
- power output: 1,2kW at 2500min^{-1}
- bore: 65,1mm
- stroke: 44,4mm
- compression ratios: 1:10; 1:8,5; 1:7 (original compression ratio), 1:5,5; 1:4
- ignition timing adjustable in 11 stages: 10° after TDC to 40° before TDC

Belt pulley: Ø 125mm

LxWxH: 350x420x500mm
Weight: approx. 21kg

Scope of delivery

1 engine, complete with all connections and supply lines
5 combustion chamber inserts
1 pin type face wrench
1 manual

Description

- **engine for installation in the CT 159 test stand**
- **part of the GUNT-FEMLine**

In conjunction with the CT 159 test stand and the HM 365 load unit, the engine is highly suitable for investigation of different compression ratios, ignition timing adjustment and an adjustable jet nozzle.

The engine used here is an air-cooled single-cylinder four-stroke petrol engine with external carburation. A modified cylinder head permits experiments with various combustion chamber inserts and compression ratios. To adjust the mixture composition, the carburettor was modified. CT 152 is fitted with a manual adjustment to adjust the ignition timing – from advanced to retarded.

The engine includes a sensor to measure the exhaust gas temperature. The sensor, ignition cut-off as well as air and fuel supply are connected to the CT 159 test stand.

The full load and partial load characteristic curves of the engine are plotted in experiments.

CT 153
Two-stroke petrol engine for CT 159

Learning objectives/experiments

- in conjunction with CT 159 test stand and HM 365 load unit
  - familiarisation with a four-stroke petrol engine
  - plotting of torque and power curves
  - determination of specific fuel consumption
  - determination of volumetric efficiency and lambda (fuel-air ratio)

Specification

[1] air-cooled single-cylinder two-stroke petrol engine for installation in CT 159 test stand
[2] engine mounted on a base plate with vibration dampers
[3] force transmission to brake via pulley, gear transmission 2:1
[4] engine completely equipped with fuel line, throttle cable and exhaust gas temperature sensor
[5] fuel hose with self-sealing quick-release coupling

Technical data

Air-cooled single-cylinder petrol engine
- power output: 1,32kW at 6500min^{-1}
- displacement: 45cm^3
- bore: 42,5mm
- stroke: 32mm

V-belt: diameter=63mm

LxWxH: 430x355x310mm
Weight: approx. 8kg

Scope of delivery

1 engine, complete with all connections and supply lines
1 manual

Description

- **engine for installation in the CT 159 test stand**
- **part of the GUNT-FEMLine**

In conjunction with the CT 159 test stand and the HM 365 load unit, the two-stroke petrol engine is highly suitable for use in teaching the fundamentals of engine functioning and measurement.

The engine used here is an air-cooled single-cylinder two-stroke petrol engine with a membrane carburettor. The engine is started by an electric motor mounted in the HM 365 unit. The air cooling is effected by a flywheel fan. The engine output is dissipated via a centrifugal clutch. The HM 365 load unit is coupled by way of a covered V-belt drive. Because of the high speed this engine is provided with a smaller pulley than other engines in the series.

The engine includes a sensor to measure the exhaust gas temperature. The sensor, ignition cut-off as well as air and fuel supply are connected to the CT 159 test stand.

The full load and partial load characteristic curves of the engine are plotted in experiments.

CT 159
Modular test stand for single-cylinder engines, 2,2kW

Learning objectives/experiments

- in conjunction with the HM 365 load unit and one of the engines (CT 150 – CT 153)
  - plotting of torque and power curves
  - determination of specific fuel consumption
  - determination of volumetric efficiency and lambda (fuel-air ratio)
  - determination of the frictional power of the engine (in passive mode)

Description

- **setup of a complete test stand in conjunction with the universal drive and brake unit HM 365 and an engine**
- **test stand for single-cylinder internal combustion engines up to 2,2kW**
- **HM 365 drive and brake unit used as belt-driven starter-generator**
- **part of the GUNT-FEMLine**

This test stand measures the power output of internal combustion engines delivering up to 2,2kW. The complete test stand consists of three main elements: The CT 159 for mounting of the engine and as a control unit, the universal drive and brake unit HM 365 as a load unit and a choice of engine: four-stroke diesel engine (CT 151), two-stroke petrol engine (CT 153) and two four-stroke petrol engines (CT 150 or CT 152 with variable compression).

The main function of CT 159 is to mount the engine, supply it with fuel and air and record and display relevant measurement data. The engine is mounted on a vibration-insulated base plate and connected by way of a belt drive to HM 365.

HM 365 is initially used to start the engine. As soon as the engine is running, HM 365 acts as a brake for applying a load to the engine.

The lower section of the mobile frame contains fuel tanks and a stabilisation tank for the intake air.

The vibration-dampened switch cabinet contains digital displays for temperatures (one display each for exhaust gas, fuel and intake air) and air consumption. The speed and torque are adjusted and displayed on the HM 365.

The measured values are transmitted directly to a PC via USB. The data acquisition software is included.

CT 159
Modular test stand for single-cylinder engines, 2,2kW

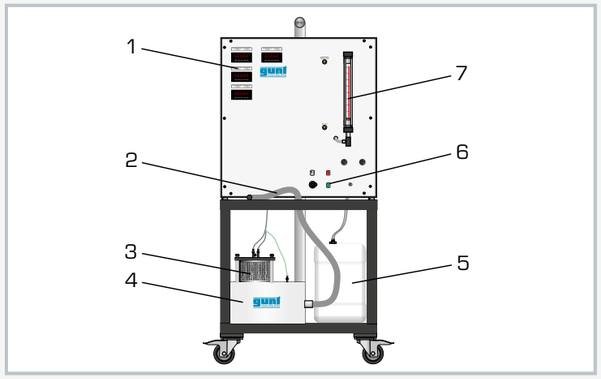

1 displays, 2 air hose, 3 air filter, 4 stabilisation tank, 5 fuel tank with pump, 6 connections and controls, 7 measuring tube for fuel consumption

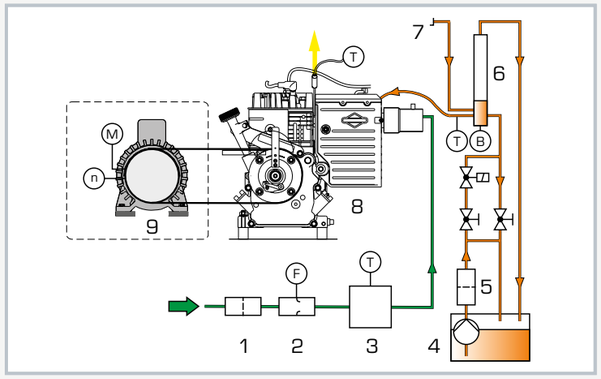

1 air filter, 2 orifice plate, 3 stabilisation tank, 4 fuel tank with pump, 5 fuel filter, 6 measuring tube for fuel consumption, 7 diesel return, 8 motor (CT 150-CT 153), 9 HM 365; B fuel consumption, T temperature, F volumetric flow rate, n speed, M torque, orange: fuel, green: intake air, yellow: exhaust gas

Complete experimental setup with HM 365, CT 159 and CT 151

Specification

[1] test stand for mounting of prepared single-cylinder engines (two-stroke and four-stroke) with a maximum power output of 2,2kW
[2] engine started by HM 365
[3] HM 365 acting as a brake generates the engine load
[4] force transmission from engine to load unit via V-belt drive
[5] continuous adjustment of speed and torque using HM 365
[6] vibration-dampened switch cabinet for display and control
[7] measuring tube with scale and pressure sensor for manual and electronic fuel consumption measurement
[8] measurement and display of air consumption, ambient temperature and fuel temperature
[9] measured value displays for engine exhaust gas temperature
[10] stabilisation tank for intake air
[11] 3 supply tanks for different fuels
[12] GUNT software for data acquisition via USB under Windows 7, 8.1, 10

Technical data

3 fuel tanks: 5L each

Measuring ranges
- temperature:
  - 0...100°C (ambient)
  - 0...100°C (fuel)
  - 0...1000°C (exhaust gas)
- air consumption: 30...333L/min
- fuel consumption: 0...50cm^3/min

230V, 50Hz, 1 phase
230V, 60Hz, 1 phase; 120V, 60Hz, 1 phase
UL/CSA optional
LxWxH: 900x900x1900mm
Weight: approx. 135kg

Required for operation

exhaust gas routing, ventilation
PC with Windows recommended

Scope of delivery

1 test stand (devoid of engine and load unit)
1 set of tools
1 set of accessories
1 GUNT software CD + USB cable
1 set of instructional material

CT 110
Test stand for single-cylinder engines, 7,5 kW

The CT 110 test stand can be used for a wide range of experiments on small internal combustion engines with a power output of up to 7.5 kW. There is a choice of 4 different engines, which can be mounted on the base plate in the test stand as required. An engine can be installed in just a few minutes.

A load is applied to the engines by an air-cooled asynchronous motor, which is actuated by a frequency converter.

The engines can be investigated under full and partial load. A variable load and speed is used to determine the characteristic diagram for the engine. The interaction of the brake and the engine can also be investigated.

The test stand is ideal for both demonstrations and for independent experiments by students. The powerful software provides excellent support for the learning process. The well-structured instructional material sets out the fundamentals and provides a step-by-step guide through the experiments.

The test stand can be operated in normal laboratory facilities. The engine and asynchronous motor are mounted on a single vibration-insulated frame. Intake sound absorption reduces noise. The exhaust gases are vented externally via a hose.

CT 110 Test stand for single-cylinder engines, 7,5 kW

CT 110
+ test engine (CT 100.20 – CT 100.23) incl. software for data acquisition

- characteristic curves at full and partial load
- determination of engine friction loss
- comparison of diesel and petrol engines
- comparison of two-stroke and four-stroke engines

CT 100.20
Four-stroke petrol engine

Air-cooled four-stroke petrol engine with carburettor

CT 100.21
Two-stroke petrol engine

Air-cooled two-stroke petrol engine with reverse scavenging

CT 100.22
Four-stroke diesel engine

Air-cooled four-stroke diesel engine with direct injection

CT 100.23
Water-cooled four-stroke diesel engine

Water-cooled four-stroke diesel engine using the swirl chamber principle

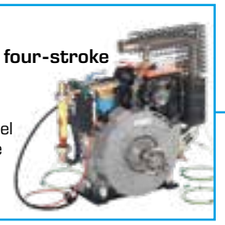

Extended range of experiments

with

electronic indication with PC-based data acquisition with CT 100.13 + engine-specific pressure transducer (CT 100.14 – CT 100.17)

and/or

exhaust gas analysis with CT 159.02

and/or

exhaust gas calorimeter with CT 100.11

CT 100.14
Pressure transducer

CT 100.17
Pressure transducer

CT 100.16
Pressure transducer

CT 100.15
Pressure transducer

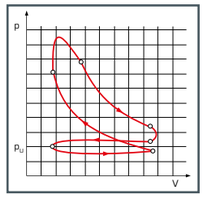

CT 100.13
Electronic engine indicating system

Pressure measurement in the cylinder chamber of an internal combustion engine

- p-V diagram
- p-t diagram
- pressure curve during gas exchange
- determination of the indicated performance
- determination of mechanical efficiency

TDC sensors for all models are included in the scope of delivery

CT 159.02
Exhaust gas analysing unit

Measurement of the composition of exhaust gases (CO, CO_2, HC, O_2), the fuel/air ratio **λ** and the oil temperature of the engine.

CT 100.11
Exhaust gas calorimeter

Counterflow heat exchanger for calorimetric analysis of exhaust gases from internal combustion engines

CT 100.20
Four-stroke petrol engine for CT 110

Learning objectives/experiments

- in conjunction with CT 110 test stand
  - familiarisation with a four-stroke petrol engine
  - plotting of torque and power curves
  - determination of specific fuel consumption
  - determination of volumetric efficiency and lambda (fuel-air ratio)
  - determination of the frictional power of the engine

Specification

[1] air-cooled single-cylinder four-stroke petrol engine for installation in the CT 110 test stand
[2] engine mounted on base plate
[3] force transmission to brake via elastic claw coupling
[4] engine complete with fuel hose and exhaust gas temperature sensor
[5] fuel hose with self-sealing quick-release coupling

Technical data

Air-cooled single-cylinder petrol engine
- power output: 7,5kW at 3000min $^{-1}$
- bore: 87,3mm
- stroke: 66,7mm

LxWxH: 600x480x630mm
Weight: approx. 36kg

Scope of delivery

1 engine, complete with all connections and supply lines
1 manual

Description

- **engine for use in CT 110 test stand**

In conjunction with the CT 110 test stand, which includes a drive and brake unit, the four-stroke petrol engine is highly suitable for use in teaching the fundamentals of engine functioning and measurement.

The engine used here is an air-cooled single-cylinder four-stroke petrol engine with external carburation. The engine is started and slowed down by an electric motor mounted in the CT 110 unit. The air cooling is effected by a flywheel fan. The brake unit is connected by way of a elastic claw coupling.

The engine is prepared for measurement of the cylinder pressure for indication. It includes a sensor to measure the exhaust gas temperature and a connection to measure the intake pressure. Both sensors, ignition cut-off and fuel supply are connected to the CT 110 test stand.

The full load and partial load characteristic curves of the engine are plotted in experiments.

CT 100.21
Two-stroke petrol engine for CT 110

Learning objectives/experiments

- in conjunction with CT 110 test stand
  - familiarisation with a two-stroke petrol engine
  - plotting of torque and power curves
  - determination of specific fuel consumption
  - determination of volumetric efficiency and lambda (fuel-air ratio)

Specification

[1] air-cooled single-cylinder two-stroke petrol engine for installation in the CT 110 test stand
[2] engine mounted on base plate
[3] force transmission to brake via elastic claw coupling
[4] engine complete with fuel hose and exhaust gas temperature sensor
[5] fuel hose with self-sealing quick-release coupling

Technical data

Air-cooled single-cylinder petrol engine with reverse scavenging
- power output: 4.9kW at 4500min $^{-1}$
- compression ratio: 7.1:1
- bore: 61mm
- stroke: 54mm

LxWxH: 570x350x470mm
Weight: approx. 20kg

Scope of delivery

1 engine, complete with all connections and supply lines
1 manual

Description

- **test engine for use in CT 110 test stand**

In conjunction with the CT 110 test stand, which includes a drive and brake unit, the two-stroke petrol engine is highly suitable for use in teaching the fundamentals of engine functioning and measurement.

The engine used here is an air-cooled single-cylinder two-stroke petrol engine with reverse scavenging. The engine is started and slowed down by an electric motor mounted in the CT 110 unit. The air cooling is effected by a flywheel fan. The brake unit is connected by way of a elastic claw coupling.

The engine is prepared for measurement of the cylinder pressure for indication. It includes a sensor to measure the exhaust gas temperature and a connection to measure the intake pressure. Both sensors, ignition cut-off and fuel supply are connected to the CT 110 test stand.

The full load and partial load characteristic curves of the engine are plotted in experiments.

CT 100.22
Four-stroke diesel engine for CT 110

Learning objectives/experiments

- in conjunction with CT 110 test stand
  - familiarisation with a four-stroke diesel engine
  - plotting of torque and power curves
  - determination of specific fuel consumption
  - determination of volumetric efficiency and lambda (fuel-air ratio)
  - determination of engine friction loss

Specification

[1] air-cooled single-cylinder four-stroke diesel engine for installation in the CT 110 test stand
[2] engine mounted on base plate
[3] force transmission to brake via elastic claw coupling
[4] engine complete with fuel hose and exhaust gas temperature sensor
[5] fuel hose with self-sealing quick-release coupling
[6] engine also available as biodiesel engine CT 100.24

Technical data

Air-cooled single-cylinder diesel engine with direct injection
- power output: 4,5kW at 2700min^{-1}
- compression ratio 22:1
- bore: 80mm
- stroke: 69mm

LxWxH: 470x400x480mm
Weight: approx. 43kg

Scope of delivery

1 engine, complete with all connections and supply lines
1 manual

Description

- **test engine for use in CT 110 test stand**

In conjunction with the CT 110 test stand, which includes a drive and brake unit, the four-stroke diesel engine is highly suitable for use in teaching the fundamentals of engine functioning and measurement.

The engine used here is an air-cooled single-cylinder four-stroke diesel engine with direct injection. The diesel engine is started and slowed down by an electric motor mounted in the CT 110 unit. The air cooling is effected by a flywheel fan. The brake unit is connected by way of a elastic claw coupling.

The engine is prepared for measurement of the cylinder pressure for indication. It includes a sensor to measure the exhaust gas temperature and a connection to measure the intake pressure. Both sensors, ignition cut-off and fuel supply are connected to the CT 110 test stand.

The full load and partial load characteristic curves of the engine are plotted in experiments.

CT 100.23
Water-cooled four-stroke diesel engine for CT 110

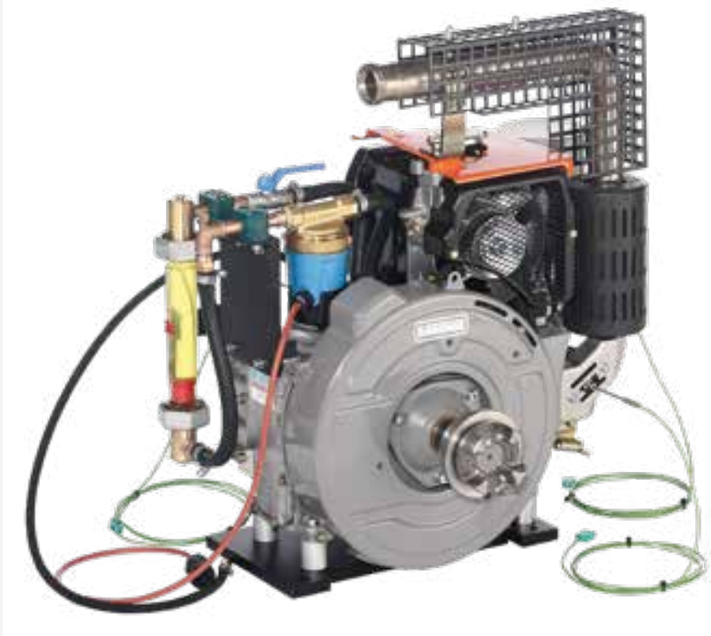

Learning objectives/experiments

- in conjunction with CT 110 test stand
  - familiarisation with a water-cooled four-stroke diesel engine
  - plotting of torque and power curves
  - determination of specific fuel consumption
  - determination of volumetric efficiency and lambda (fuel-air ratio)
  - determination of engine friction loss
  - determination of amount of heat emitted by the engine

Specification

[1] water-cooled single-cylinder four-stroke diesel engine with swirl chamber for installation in the CT 110 test stand
[2] engine mounted on base plate
[3] force transmission to brake via elastic claw coupling
[4] engine complete with fuel hose and exhaust gas temperature sensor
[5] cooling water circuit with circulating pump, flow meter and temperature sensors
[6] fuel hose with self-sealing quick-release coupling

Technical data

Single-cylinder diesel engine with indirect injection
- bore: 75mm, stroke: 70mm
- power output: 5,1kW at 3000min^{-1}

Cooling water circuit
- capacity: 2,5L
- pump: max. 640L/h

Measuring ranges
- temperature: 2x 0...100°C
- flow rate: 30...300L/h

LxWxH: 600x420x600mm
Weight: approx. 50kg

Scope of delivery

1 engine, complete with all connections and supply lines
1 manual

Description

- **test engine for use in CT 110 test stand**

In conjunction with the CT 110 test stand, which includes a drive and brake unit, the four-stroke diesel engine is highly suitable for use in teaching the fundamentals of engine functioning and measurement.

The engine used here is an water-cooled single-cylinder four-stroke diesel engine with indirect injection. The engine is started and slowed down by an electric motor mounted in the CT 110 unit. The cooling water circulation ontains a circulating pump, flow meter and temperature sensors. The brake unit is connected by way of a elastic claw coupling.

The engine is prepared for measurement of the cylinder pressure for indication. It includes a sensor to measure the exhaust gas temperature and a connection to measure the intake pressure. Both sensors, ignition cut-off and fuel supply are connected to the CT 110 test stand.

The full load and partial load characteristic curves of the engine are plotted in experiments.

CT 110
Test stand for single-cylinder engines, 7,5kW

The illustration shows the CT 110 with the CT 100.20 engine and the CT 100.13 electronic indication system (on the shelf).

Learning objectives/experiments

- in conjunction with an engine (CT 100.20 – CT 100.23)
  - plotting of torque and power curves
  - determination of specific fuel consumption
  - determination of volumetric efficiency and lambda (fuel-air ratio)
  - determination of the frictional power of the engine (in passive mode)

Description

- **control and load unit for single-cylinder internal combustion engines up to 7,5kW**
- **asynchronous motor used as load unit, also as starter motor**
- **vibration-insulated base plate for engine mounting**

This test stand measures the power output of internal combustion engines delivering up to 7,5kW. The complete test stand consists of two main elements: The CT 110 as the control and load unit and a choice of engine: four-stroke petrol engine (CT 100.20), two-stroke petrol engine (CT 100.21) and two four-stroke diesel engines (CT 100.22, air-cooled with direct injection; CT 100.23, water-cooled with indirect injection).

The main function of the CT 110 is to provide the required braking power.

The brake unit is an air-cooled asynchronous motor with an energy recovery unit. The torque and speed are generated by way of a frequency converter. The energy recovery of the braking energy into the system provides for highly energy-efficient operation of the test stand. The torque is measured by means of a suspended brake unit and force sensor.

The engine is mounted on a vibration-insulated base plate and connected to the asynchronous motor. The mass of the base plate in conjunction with the soft bearing support ensures that the test stand runs very smoothly.

The asynchronous motor is initially used to start the engine. As soon as the engine is running, the asynchronous motor and energy recovery unit act as a brake unit for applying a load to the engine.

The braking power is fed back into the electrical system. In passive mode of the engine the asynchronous motor is also used to determine the frictional power of the engine.

The lower section of the mobile frame contains fuel tanks and a stabilisation tank for the intake air.

The air consumption is measured by way of a measuring nozzle. The fuel consumption is measured by way of the level in a vertical pipe.

The switch cabinet contains digital displays for the speed, torque and temperatures. Pressure gauges indicate negative intake pressure and air consumption. The measured values are transmitted directly to a PC via USB. The data acquisition software is included.

CT 110
Test stand for single-cylinder engines, 7,5kW

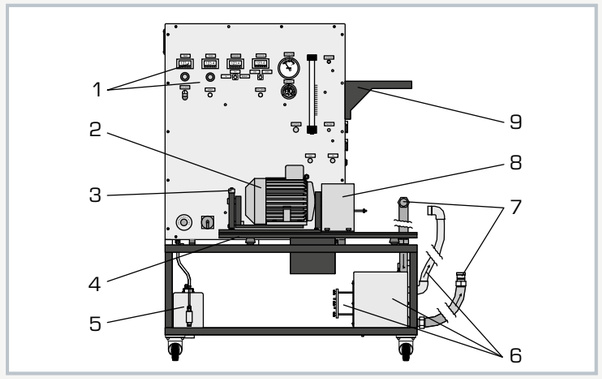

1 display and control panel, 2 asynchronous motor, 3 force sensor (torque), 4 base plate, 5 fuel tank with pump, 6 stabilisation tank with air filter and air hose, 7 exhaust gas connection, 8 coupling cover, 9 shelf, e.g. for CT 100.13

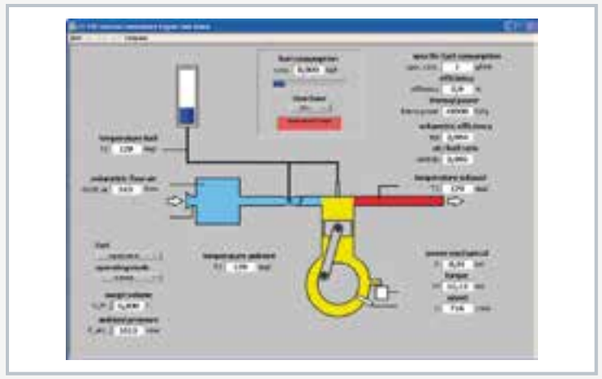

Software screenshot: process schematic

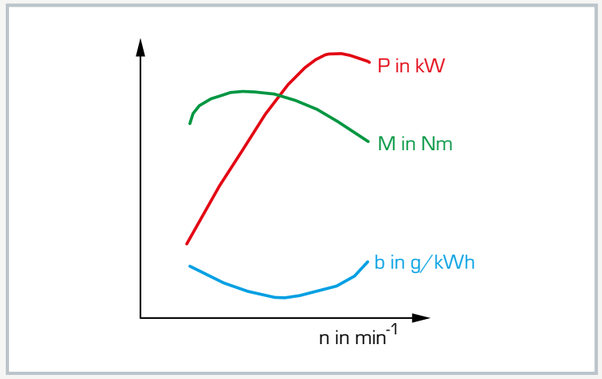

Characteristics of a four-stroke petrol engine:
n speed, M torque, P power, b specific fuel consumption

Specification

[1] control and load unit for prepared single-cylinder engines (two-stroke and four-stroke) with a maximum power output of 7,5kW
[2] asynchronous motor with energy recovery unit as brake generates engine load
[3] engine started and experiments in passive mode by asynchronous motor
[4] force transmission from engine to brake via elastic claw coupling
[5] vibration-insulated base plate for engine mounting
[6] stabilisation tank for intake air
[7] potentiometer for continuous adjustment of braking torque
[8] potentiometer for continuous adjustment of braking speed
[9] measurement and display of torque, air temperature, air intake quantity, negative intake pressure, speed, fuel consumption, fuel temperature
[10] measured value displays for engine: exhaust gas temperature and cooling water temperatures
[11] GUNT software for data acquisition via USB under Windows 7, 8.1, 10

Technical data

Asynchronous motor as brake
- power output: approx. 7,5kW at 2900min^{-1}

Measuring ranges
- torque: -50...50Nm
- temperature: 0...900°C
- speed: 0...5000min^{-1}
- fuel consumption: 50cm^3/min
- engine intake pressure: -400...0mbar
- air consumption: 0...690L/h

400V, 50Hz, 3 phases
400V, 60Hz, 3 phases, 230V, 60Hz, 3 phases
UL/CSA optional
LxWxH: 1450x850x1880mm
Weight: approx. 245kg

Required for operation

ventilation, exhaust gas routing
PC with Windows recommended

Scope of delivery

1 test stand (without engine)
1 set of tools
1 set of accessories
1 GUNT software CD + USB cable
1 set of instructional material

CT 300
Test stand for two-cylinder engines, 11 kW

The CT 300 test stand enables a wide range of experiments on 4-stroke internal combustion engines in the power range up to 11 kW.

Two different engines are available, each of which is mounted on a base: an air-cooled 2-cylinder petrol engine and a water-cooled 2-cylinder diesel engine.

The test stand and the engine being studied can be operated separately from each other. The engine runs in a separate area and is operated and adjusted remotely by the test stand. This means experiments on the test stand can be carried out and demonstrated in the laboratory or in the lecture hall without disturbing noise from the engine. The test stand and engine are connected to each other via appropriate cables.

Due to the engine's own weight, a hoist is required to install the engine. Load is applied to the engines via an air-cooled asynchronous motor controlled by a frequency converter.

The engines can be examined under full load or under partial load conditions. The characteristic diagram is determined with variable load and speed. The interaction of the brake and engine can also be examined in this context.

CT 300 Engine test stand, 11kW

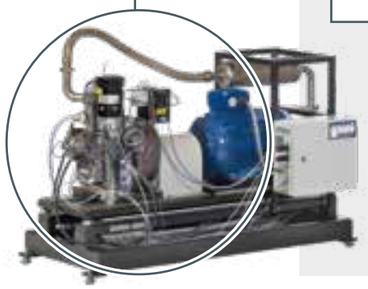

The engine is installed on the stable base with the brake unit of the test stand. The test stand and engine can be set up at different locations, even in completely separate rooms, and connected to each other via appropriate cables. The engine is operated from the test stand via remote control.

CT 300
+ test engine (CT 300.04 – CT 300.05) incl. software for data acquisition

- characteristic curves at full and partial load
- determination of engine friction loss
- comparison of diesel and petrol engines

CT 300.04
Two-cylinder petrol engine for CT 300

Air-cooled two-cylinder four-stroke petrol engine with external carburation

CT 300.05
Two-cylinder diesel engine for CT 300

Water-cooled two-cylinder four-stroke diesel engine with indirect injection

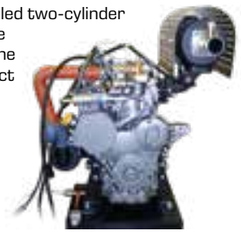

Extended range of experiments

with

electronic indication including software for data acquisition with CT 300.09 + engine-specific pressure transducer with TDC sensor (CT 300.17 – CT 300.18)

CT 300.17
Pressure transducer and TDC sensor

CT 300.18
Pressure transducer and TDC sensor

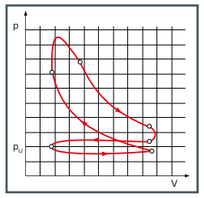

CT 300.09
Electronic engine indicating system

Pressure measurement in the cylinder chamber of an internal combustion engine

- p-V diagram
- p-t diagram
- pressure curve during gas exchange
- determination of the indicated performance
- determination of mechanical efficiency

and/or

exhaust gas analysis with CT 159.02

CT 159.02
Exhaust gas analysing unit

Measurement of the composition of exhaust gases (CO, CO_2, HC, O_2), the fuel/air ratio **λ** and the oil temperature of the engine.

and/or

exhaust gas calorimeter (amount of heat in exhaust gas) with CT 300.01

CT 300.01
Exhaust gas calorimeter

Counterflow heat exchanger for calorimetric analysis of exhaust gases from internal combustion engines

CT 300.04
Two-cylinder petrol engine for CT 300

Learning objectives/experiments

- plotting of torque and power curves
- determination of specific fuel consumption
- determination of volumetric efficiency and lambda (fuel-air ratio)
- energy balance
- determination of the frictional power of the engine (in passive mode)

Specification

[1] air-cooled two-cylinder four-stroke petrol engine for installation in the CT 300 test stand
[2] engine mounted on base plate
[3] force transmission to brake via elastic claw coupling
[4] engine complete with fuel hose and exhaust gas temperature sensor
[5] fuel hose with self-sealing quick-release coupling

Technical data

Air-cooled two-cylinder petrol engine
- displacement: 480cm^3
- bore: 68mm
- stroke: 66mm
- power output: approx. 11,9kW at 3600min^{-1}

LxWxH: 500x440x550mm
Weight: approx. 60kg

Scope of delivery

1 engine, complete with all connections and supply lines
1 manual

Description

- **engine for use in CT 300 test stand**

In conjunction with the CT 300 test stand, which includes a drive and brake unit, the four-stroke petrol engine CT 300.04 is highly suitable for use in teaching the fundamentals of engine functioning and measurement.

The engine used here is an air-cooled two-cylinder four-stroke petrol engine with external carburation. The engine is started, run in passive mode and slowed down by an electric motor mounted in the CT 300 unit. The brake unit is connected by way of a elastic claw coupling.

The engine is prepared for measurement of the cylinder pressure for indication, and additionally includes a sensor to measure the exhaust gas temperature. The sensor, ignition cut-off and fuel supply are connected to the CT 300 test stand.

The full load and partial load characteristic curves of the engine are plotted in experiments.

CT 300.05
Two-cylinder diesel engine for CT 300

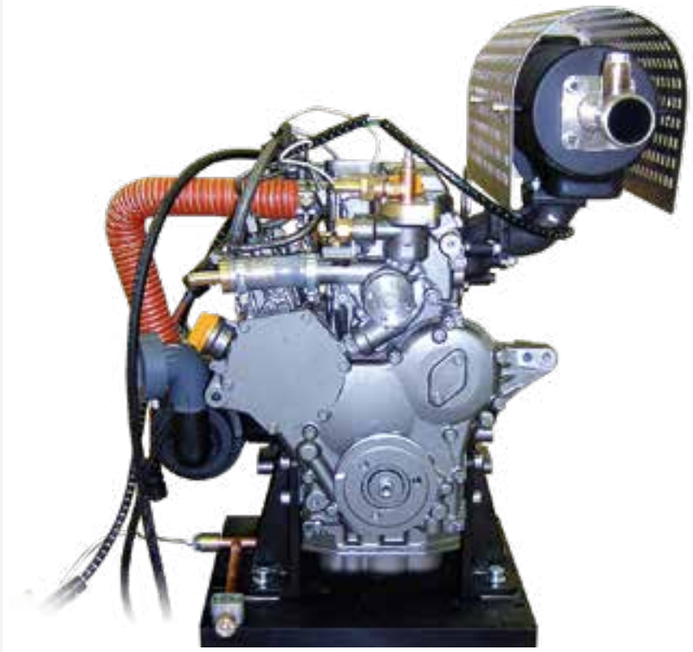

Learning objectives/experiments

- plotting of torque and power curves
- determination of specific fuel consumption
- determination of volumetric efficiency and lambda (fuel-air ratio)
- energy balance
- determination of the frictional power of the engine (in passive mode)

Specification

[1] water-cooled two-cylinder four-stroke diesel engine for installation in the CT 300 test stand
[2] engine mounted on base plate
[3] force transmission to brake via elastic claw coupling
[4] engine complete with fuel hose and exhaust gas temperature sensor
[5] fuel hose with self-sealing quick-release coupling

Technical data

Water-cooled two-cylinder diesel engine
- displacement: 570cm^3
- bore: 70mm
- stroke: 74mm
- power output: approx. 10,2kW at 3600min^{-1}

LxWxH: 650x610x710mm
Weight: approx. 110kg

Scope of delivery

1 engine, complete with all connections and supply lines
1 manual

Description

- **engine for use in CT 300 test stand**

In conjunction with the CT 300 test stand, which includes a drive and brake unit, the four-stroke diesel engine CT 300.05 is highly suitable for use in teaching the fundamentals of engine functioning and measurement.

The engine used here is a water-cooled two-cylinder four-stroke diesel engine with indirect injection. The engine is started, run in passive mode and slowed down by an electric motor mounted in the CT 300 unit. The brake unit is connected by way of a elastic claw coupling.

The engine is prepared for measurement of the cylinder pressure for indication, and additionally includes a sensor to measure the exhaust gas temperature. The sensor, ignition cut-off and fuel supply are connected to the CT 300 test stand.

The full load and partial load characteristic curves of the engine are plotted in experiments.

CT 300
Engine test stand, 11kW

Description

- **test stand for industrial two-cylinder engines up to 11kW**
- **asynchronous motor used as load unit, also as starter motor**

This test stand measures the power output of internal combustion engines delivering up to 11kW. The complete test stand consists of two main elements: The CT 300 as the control and load unit and a choice of engine: two-cylinder petrol engine (CT 300.04, air-cooled) and two-cylinder diesel engine (CT 300.05, water-cooled).

The main function of the CT 300 is to provide the required braking power. The brake unit is an air-cooled asynchronous motor with an energy recovery unit. The braking speed and torque can be precisely adjusted using a frequency converter. The recovery of the braking energy into the system provides for highly energy-efficient operation of the test stand. The torque is measured by means of a suspended brake unit and force sensor.

The engine is mounted on a base plate and connected to the asynchronous motor. The base plate is vibration-insulated, so no vibrations are transmitted to the surrounding environment.
The asynchronous motor is initially used to start the engine. As soon as the engine is running, the asynchronous motor and energy recovery unit act as a brake for applying a load to the engine. The braking power is fed back into the electrical system.

The lower section of the mobile frame contains fuel supply tanks and a stabilisation tank for the intake air. Two separate fuel gauge systems allow the quick change between diesel and petrol operation.

The switch cabinet contains digital displays for the speed, torque, air consumption and temperatures (engine cooling water inlet and outlet, exhaust gas, fuel and intake air). The fuel consumption and cooling water flow rate in the engine and the CT 300.01 calorimeter available as an option are displayed in analogue form. The measured values are transmitted directly to a PC via USB. The data acquisition software is included.

Lifting gear is required to exchange the engines.

Learning objectives/experiments

- in conjunction with an engine (CT 300.04 – CT 300.05)
  - plotting of torque and power curves
  - determination of specific fuel consumption
  - determination of volumetric efficiency and lambda (fuel-air ratio)
  - determination of the frictional power (in passive mode)
  - energy balances (for water-cooled engines)

CT 300
Engine test stand, 11kW

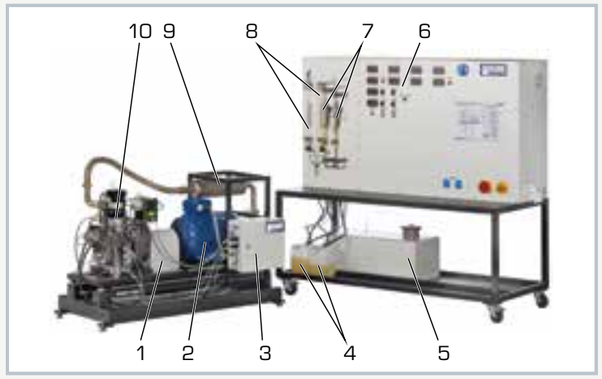

1 elastic coupling, 2 asynchronous motor, 3 switch cabinet, 4 fuel tank, 5 stabilisation tank, 6 display and control panel, 7 fuel consumption, 8 cooling water flow measurement (engine and CT 300.01 calorimeter), 9 exhaust, 10 experimental engine

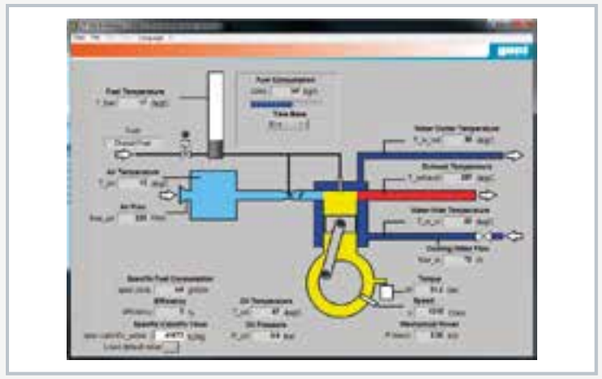

Software screenshot: process schematic

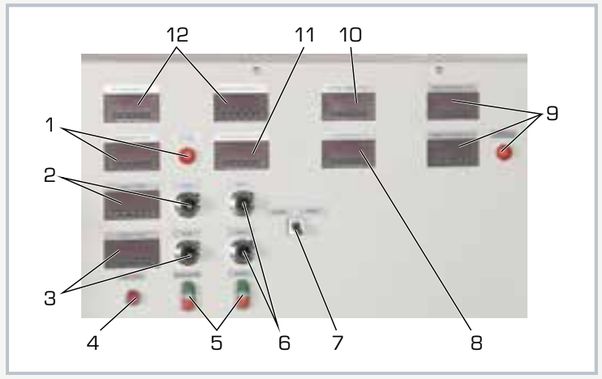

Instrumentation: 1 oil pressure with warning lamp, 2 torque with adjustment, 3 speed with adjustment, 4 reset frequency converter, 5 switch for motor and brake, 6 engine accelerator, 7 switch petrol/engine operation, 8 air temperature, 9 cooling water temperatures with alarm lamp, 10 intake air consumption, 11 fuel temperature, 12 exhaust gas and oil temperatures

Specification

[1] control and load unit for prepared four-stroke engines with a maximum power output of 11kW
[2] vibration-insulated base plate for mounting of the engine and the asynchronous motor
[3] asynchronous motor with energy recovery unit as brake generates engine load
[4] engine and passive mode started by asynchronous motor
[5] force transmission from engine to brake via elastic claw coupling
[6] 2 separate fuel gauge systems
[7] stabilisation tank for intake air 75L
[8] potentiometer for continuous adjustment of braking speed and torque
[9] measurement and display of temperatures (oil, fuel, air), engine load, engine speed, fuel consumption, air intake quantity, oil pressure
[10] measured value displays for engine: exhaust gas temperature and cooling water temperatures
[11] GUNT software for data acquisition via USB under Windows 7, 8.1, 10

Technical data

Asynchronous motor as brake
- nominal power output: 11kW at 3000min^{-1}

Measuring ranges
- torque: -200...200Nm
- speed: 0...5000min^{-1}
- volumetric flow rate: 0...938L/min (intake air)
- flow rate: 0...250L/h (cooling water)
- temperature:
  - 4x 0...120°C
  - 1x 0...150°C (oil)
  - 1x 0...900°C (exhaust gas)
- pressure: 0...6bar (oil)

400V, 50Hz, 3 phases
400V, 60Hz, 3 phases
230V, 60Hz, 3 phases
UL/CSA optional
LxWxH: 2100x790x1800mm (switch cabinet)
LxWxH: 1550x800x910mm (base plate)
Weight: approx. 350kg

Required for operation

water connection: 500L/h
ventilation, exhaust gas routing
PC with Windows recommended

Scope of delivery

1 test stand (without engine)
1 set of tools
1 set of accessories
1 GUNT software CD + USB cable
1 set of instructional material

CT 400
Test stand for four-cylinder engines, 75 kW

The series CT 400 equipment offers a wide range of experiments on industrial engines with a power output of up to 75 kW.

The complete test stand is made up of the CT 400 load unit and an engine. A choice of two water-cooled engines is available:

- 4 cylinder in-line engine, petrol
- 4 cylinder in-line engine, diesel

The engine can be connected to the load unit quickly and easily. The CT 400 load mechanism essentially consists of an adjustable air-cooled eddy current brake. The engines can be investigated in two modes:

- **torque control:** Manual adjustment of braking torque. The characteristic curve for the brake is changed, different full load points are approached and measurements are carried out depending on the speed.
- **speed control:** A controller keeps the speed constant, while the engine torque is increased. This allows different load points to be approached and measurements are carried out depending on the load.

An indicating system with software for data acquisition for the pressure curves in the engines and an exhaust gas analysis unit are available as accessories.

CT 400 Load unit, 75 kW, for four-cylinder engines

CT 400
+ test engine (CT 400.01 or CT 400.02) incl. software for data acquisition

- characteristic curves depending on speed and power output
- creation of heat balances at full and partial load
  - determination of imparted energy, effective usable power, amount of heat in cooler, amount of heat in exhaust gas losses, heat losses due to radiation and convection
  - representation in Sankey diagram
- comparison of diesel and petrol engines

CT 400.01
Four-cylinder petrol engine for CT 400

Water-cooled petrol engine with intake-manifold fuel injection, max. 55 kW

CT 400.02
Four-cylinder diesel engine for CT 400

Water-cooled naturally aspirated diesel engine with direct injection, max. 41 kW

Extended range of experiments

with

electronic indication including software for data acquisition with CT 400.09 + engine-specific pressure transducer with TDC sensor (CT 400.16 or CT 400.17)

and/or

exhaust gas analysis with CT 159.02

CT 400.16
Pressure transducer and TDC sensor

CT 400.17
Pressure transducer and TDC sensor

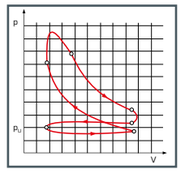

CT 400.09
Electronic engine indicating system for CT 400

Pressure measurement in the cylinder chamber of an internal combustion engine

- p-V diagram
- p-t diagram
- pressure curve during gas exchange
- determination of the indicated performance
- determination of mechanical efficiency

CT 159.02
Exhaust gas analysing unit

Measurement of the composition of exhaust gases (CO, CO_2, HC, O_2), the fuel/air ratio **λ** and the oil temperature of the engine.

CT 400.01
Four-cylinder petrol engine for CT 400

Learning objectives/experiments

- in conjunction with CT 400 load unit
  - plotting of torque and power curves
  - determination of specific fuel consumption
  - determination of volumetric efficiency and lambda (fuel-air ratio)
  - energy balances
  - overall engine efficiency

Description

- **engine for setup of a test stand in conjunction with the CT 400 load unit**
- **closed cooling water circuit**
- **easy connection to the CT 400 load unit**

In conjunction with the CT 400 load unit, the CT 400.01 engine is a complete engine test stand. The engine used here is a four-cylinder petrol engine with a controlled catalytic converter. It has its own closed cooling water circuit.

A solid welded frame on rollers carries the entire setup. Hazardous areas such as hot surfaces and rotating parts are covered with perforated plates. The connection to the brake is made via a rotationally elastic coupling with a jointed shaft. The engine is attached to the load unit by fasteners.

The engine is fitted with sensors that measure the temperatures and the cooling water flow rate. The switch cabinet contains all of the electronic equipment for managing the engine (factory set). On the switch cabinet are an ignition key, an operating time counter and warning lamps. Data is transferred between the CT 400 load unit and the engine via a data cable connecting the switch cabinets for the two units. A starter battery is also housed in the frame.

For safety reasons, the engine has been modified in a way that it only starts when it is connected to the load unit both mechanically and electrically.

CT 400.01
Four-cylinder petrol engine for CT 400

1 cooling water tank, 2 radiator with protective screen, 3 exhaust gas connection, 4 fuel tank, 5 battery with main switch, 6 operating time counter, 7 warning lamps, 8 key switch for ignition, 9 connection for engine feed air

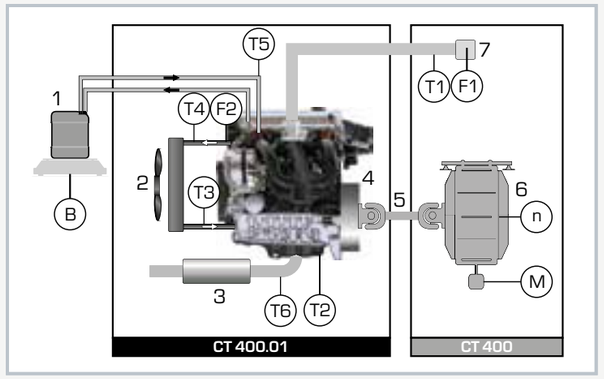

1 fuel tank, 2 radiator, 3 exhaust, 4 engine, 5 cardan shaft, 6 eddy current brake, 7 air inlet; n speed, M torque, B fuel consumption, volumetric flow rate: F1 air, F2 cooling water, temperatures: T1 intake air, T2 oil, T3 cooling water inlet, T4 cooling water outlet, T5 fuel, T6 exhaust gas

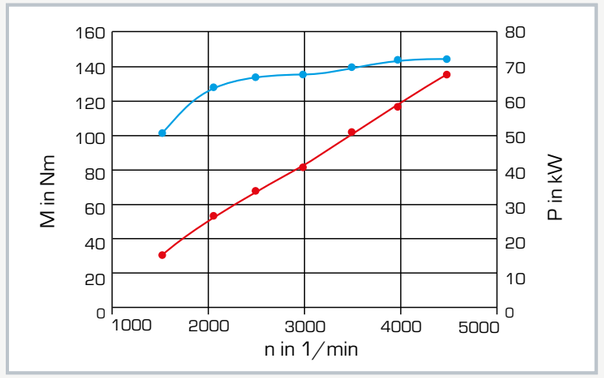

Power and torque characteristics of the engine
n speed, M torque, P power

Specification

[1] water-cooled four-cylinder petrol engine for setup of a test stand in conjunction with the CT 400 load unit
[2] engine flexibly mounted on mobile frame
[3] force transmission to brake via rotationally elastic coupling and jointed shaft
[4] engine complete with fuel supply (tank, pump, hose) and cooling water circuit
[5] sensors for cooling water flow rate and temperatures (exhaust gas, cooling water, fuel, oil)
[6] transfer of measured data via data cable from switch cabinet to CT 400 switch cabinet
[7] switch cabinet with warning lamps (oil pressure, alternator failure), operating time counter and ignition key

Technical data

Water-cooled four-cylinder petrol engine
- displacement: 1596cm^3
- bore: 79mm
- stroke: 81,4mm
- power output: max. 75kW at 4800min^{-1}
- torque: max. 155Nm at 4150min^{-1}
- compression ratio: 11:1
- ignition sequence: 1-3-4-2

Starter battery: 12V
Fuel tank capacity: 5L
Fuel: petrol 95 Octane
Engine oil: SAE 5W-30

230V, 50Hz, 1 phase
230V, 60Hz, 1 phase
230V, 60Hz, 3 phases
LxWxH: 1200x1120x1340mm
Weight: approx. 400kg

Scope of delivery

1 engine, built into frame
1 manual

CT 400.02
Four-cylinder diesel engine for CT 400

Learning objectives/experiments

- in conjunction with CT 400 load unit
- plotting of torque and power curves
- determination of specific fuel consumption
- determination of volumetric efficiency and lambda (fuel-air ratio)
- energy balances
  - overall engine efficiency

Description

- **engine for setup of a test stand in conjunction with the CT 400 load unit**
- **closed cooling water circuit**
- **easy connection with CT 400 load unit**

In conjunction with the CT 400 load unit, the CT 400.02 test engine is a complete engine test stand. The engine used here is a four-cylinder diesel engine. It has its own closed cooling water circuit.

A solid welded frame on rollers carries the entire setup. Hazardous areas such as hot surfaces and rotating parts are covered with perforated plates. The connection to the brake is made via a rotationally elastic coupling with a jointed shaft. The engine is attached to the load unit by fasteners.

The engine is fitted with sensors that measure the temperatures and the cooling water flow rate. The switch cabinet contains all of the electronic equipment for managing the engine (factory set). On the switch cabinet are an ignition key, an operating time counter and warning lamps. Data is transferred between the CT 400 load unit and the engine via a data cable connecting the switch cabinets for the two units. A starter battery is also housed in the frame.

For safety reasons, the engine has been modified in a way that it only starts when it is connected to the load unit both mechanically and electrically.

CT 400.02
Four-cylinder diesel engine for CT 400

1 cooling water tank, 2 cooler with protective screen, 3 exhaust gas connection, 4 fuel tank, 5 battery with main switch, 6 operating time counter, 7 warning lamps, 8 key switch for ignition, 9 connection for engine feed air

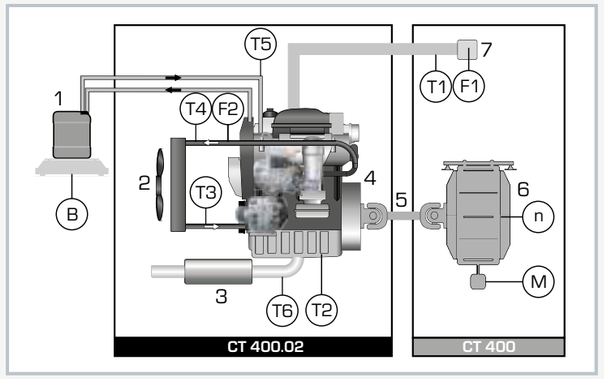

1 fuel tank, 2 radiator, 3 exhaust, 4 engine, 5 cardan shaft, 6 eddy current brake, 7 air inlet; n speed, M torque, B fuel consumption, volumetric flow rate: F1 air, F2 cooling water, temperatures: T1 intake air, T2 oil, T3 cooling water inlet, T4 cooling water outlet, T5 fuel, T6 exhaust gas

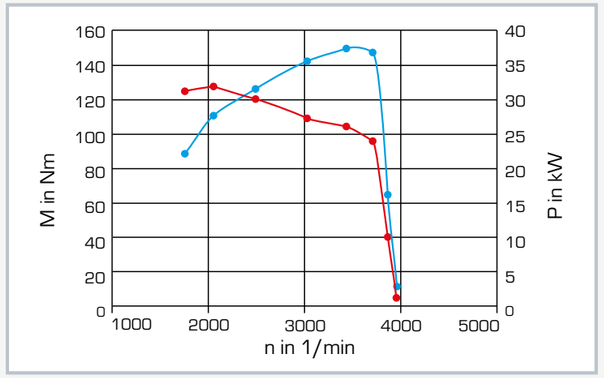

Power and torque characteristics of the engine
n speed, M torque, P power

Specification

[1] water-cooled four-cylinder diesel engine for setup an engine test stand in conjunction with CT 400 load unit
[2] engine flexibly mounted on mobile frame
[3] power transmission to brake unit via elastic coupling and a jointed shaft
[4] engine complete with fuel supply (tank, pump, line) and cooling water circuit
[5] sensors for cooling water flow rate and temperatures (exhaust gas, cooling water, fuel, oil)
[6] transfer of measured data via data cable from switch cabinet to CT 400 control cabinet
[7] switch cabinet with warning lamps (oil pressure, alternator failure, preheat), operating time counter and ignition key

Technical data

Water-cooled four-cylinder diesel engine
- displacement: 1968cm³
- bore: 81mm
- stroke: 95,5mm
- power output: max. 41kW at 3000min $^{-1}$
- torque: max. 130Nm at 1750min $^{-1}$

Starter battery: 12V

Fuel tank capacity: 5L
Engine oil: SAE 5W-30

230V, 50Hz, 1 phase
230V, 60Hz, 1 phase
230V, 60Hz, 3 phases
LxWxH: 1200x1150x1430mm
Weight: approx. 440kg

Scope of delivery

1 engine, built into frame
1 set of instructional material

CT 400
Load unit, 75kW, for four-cylinder engines

Learning objectives/experiments

- in conjunction with an engine (CT 400.01 / CT 400.02)
  - plotting of torque and power curves
  - determination of specific fuel consumption
  - determination of volumetric efficiency and lambda (fuel-air ratio)
  - energy balances
  - overall engine efficiency

Description

- **control and load unit for four-cylinder diesel and petrol engines up to 75kW**
- **air-cooled eddy current brake with precise torque adjustment for use as load unit for engine**
- **easy connection of engine**
- **complete test stand setup in conjunction with an engine**

This test stand measures the power output of internal combustion engines delivering up to 75kW. The complete test stand consists of two main elements: The CT 400 as the control and load unit and a choice of engine: CT 400.01 petrol engine or CT 400.02 diesel engine. The engine to be investigated is connected to the CT 400 using a coupling with jointed shaft.

The main function of the CT 400 is to provide the required braking power. The brake unit is an air-cooled eddy current brake. The braking torque can be precisely adjusted using the exciting current. The braking torque is measured by means of a suspended brake unit and force sensor. Due to the air cooling of the brake, the engine test stand does not require cooling water inlet or outlet. A stabilisation tank with an intake air duct for the combustion air is mounted on the frame. The quantity of air taken in is measured in the duct.

The switch cabinet contains digital displays for the speed, torque, volumetric intake air flow rate and temperatures (exhaust gas, engine oil, engine cooling water (inlet and outlet), fuel and intake air). The switch cabinet pivots, enabling the operator to adjust it to the optimum viewing angle.

Data is transferred between the CT 400 load unit and the engine via a data cable connecting the switch cabinets of the two units. The measured values can be read on digital displays. At the same time, the measured values can also be transmitted directly to a PC via USB. The data acquisition software is included.

In addition to the standard safety features (e.g. oil pressure, temperature limiter), the load unit contains a limit switch to monitor whether the brake and the engine are correctly connected.

CT 400
Load unit, 75kW, for four-cylinder engines

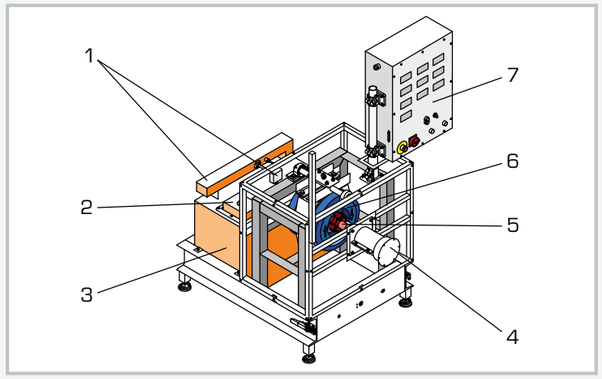

1 air intake duct with anemometer, 2 air filter, 3 intake air stabilisation tank, 4 jointed shaft cover, 5 jointed shaft with coupling, 6 eddy current brake, 7 switch cabinet with displays and controls

The illustration shows the CT 400 in conjunction with the CT 400.02 diesel engine.

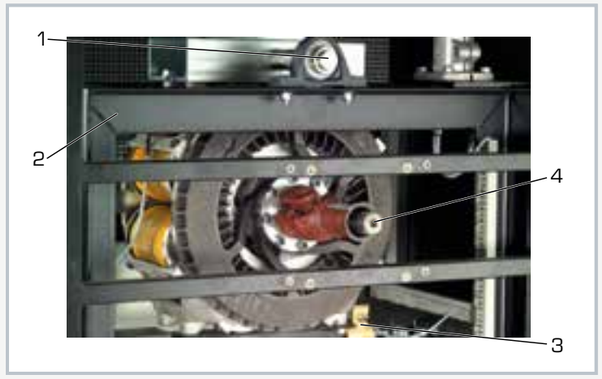

The eddy current brake is mounted in a suspended frame (1 bearing, 2 frame). The supporting force generated by the torque is recorded by a force gauge (3). 4 jointed shaft with spline

Specification

[1] load unit for prepared four-stroke diesel or petrol engines (CT 400.01 and CT 400.02) with a maximum power output of 75kW
[2] air-cooled eddy current brake
[3] force transmission from engine to brake via rotationally elastic coupling and jointed shaft
[4] stabilisation tank for intake air approx. 220L
[5] 2 modes of operation: 1. torque directly adjustable (full load characteristic), 2. torque is adjustable by speed, speed remains constant (partial load characteristic)
[6] potentiometer for continuous adjustment of brake
[7] potentiometer to "accelerate" engine
[8] recording of braking power via speed and braking torque
[9] measurement and display of engine load, air temperature, intake air consumption, speed
[10] measured value displays for engine: temperatures (oil, exhaust gas, cooling water, fuel), oil pressure, fuel consumption (using precision scale)
[11] GUNT software for data acquisition via USB under Windows 7, 8.1, 10

Technical data

Eddy current brake
- max. braking torque: 200Nm
- max. speed: 5000min^{-1}

Measuring ranges
- speed: 0...6000min^{-1}
- torque: 0...240Nm
- volumetric flow rate:
  - 0...6m^3/min (intake air)
  - 0...50L/min (cooling water)
- temperature:
  - -50...200°C
  - 0...1200°C (exhaust gas)

230V, 50Hz, 1 phase
230V, 60Hz, 1 phase
120V, 60Hz, 1 phase
UL/CSA optional
LxWxH: 1380x950x1920mm
Weight: approx. 446kg

Required for operation

PC with Windows recommended, ventilation

Scope of delivery

1 load unit
1 set of tools
1 set of accessories
1 GUNT software CD + USB cable
1 set of instructional material

4 Fundamentals of refrigeration

Introduction

Overview Refrigeration	200

Principles of cold production

Basic knowledge Principles of cold production	202
ET 400 Refrigeration circuit with variable load	204
ET 120 Cooling using the Peltier effect	206
ET 352 Vapour jet compressor in refrigeration	208
ET 122 Vortex cooling device	210
ET 480 Absorption refrigeration system	212

Compression refrigeration system

Basic knowledge Main elements of a compression refrigeration system	214
Basic knowledge Refrigeration cycle	216
Basic knowledge Representation of a refrigeration cycle in the log p-h diagram	218
ET 350 Changes of state in the refrigeration circuit	220
ET 102 Heat pump	222

Refrigeration applications

Overview ET 915 HSI training system refrigeration and air conditioning technology	224
ET 915 HSI training system refrigeration and air conditioning technology, base unit	226
ET 915.01 Refrigerator model	228
ET 915.02 Model of a refrigeration system with refrigeration and freezing stage	230

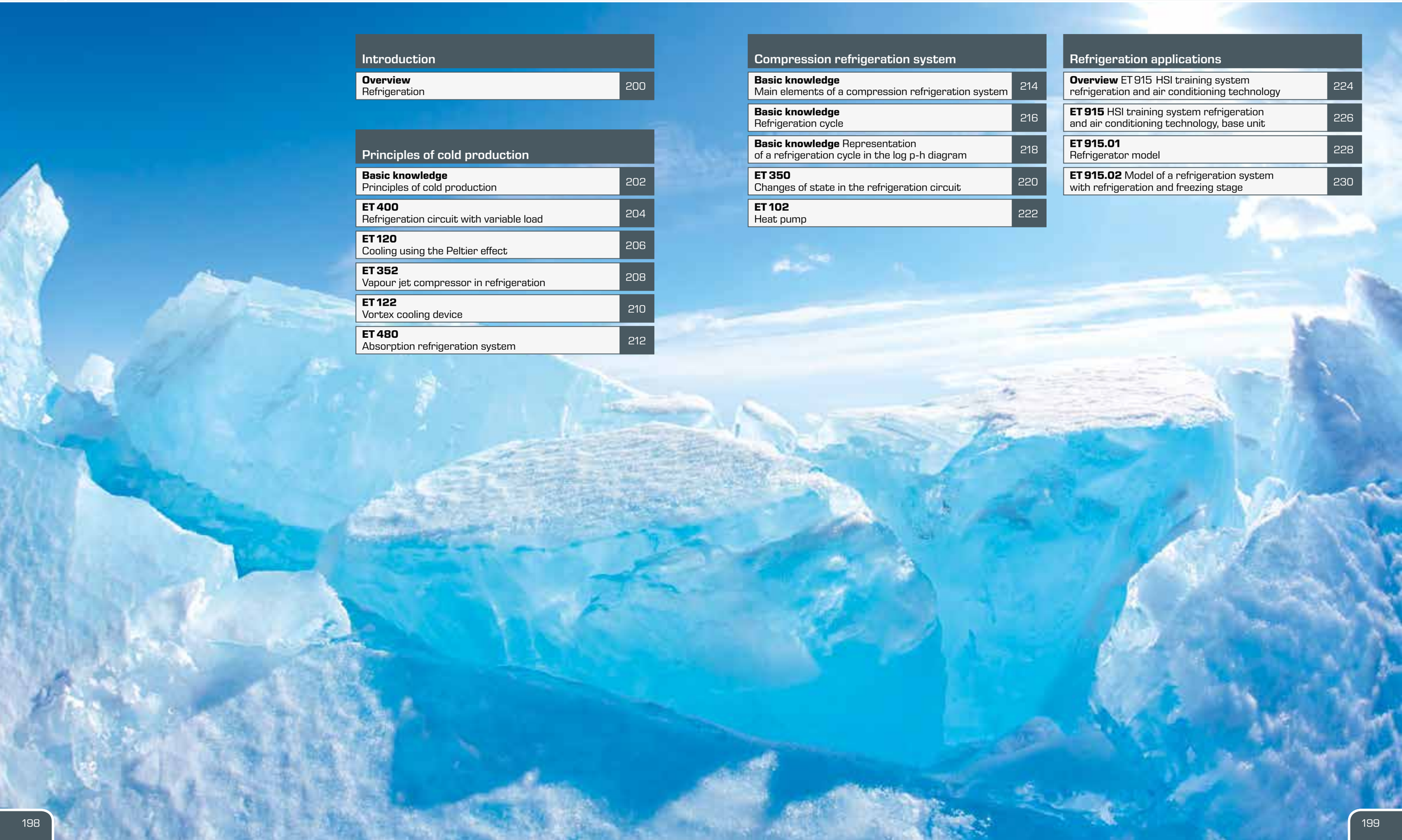

Refrigeration

What is cold anyway?

Almost every child already has an idea of what cold is, because humans can feel cold. But what the term means from a physical perspective is not so easy to classify. Cold is neither a substance nor a form of energy. Simply put, "cold" is the absence of "heat". When we talk about "cold" we mean that the temperature at one point is lower than in the environment; there is a temperature difference.

From a thermodynamic point of view, "cold" is a state of imbalance. If there is a thermodynamic imbalance, nature always strives to level this imbalance out. In accordance with the second law of thermodynamics, this balancing out always occurs from a place of high temperature to a place of low temperature.

Coming back to the child mentioned earlier, there is a temperature difference between the child's skin and the environment. Heat is transferred from the skin to the environment and the skin is cooled by the dissipation of heat.

The task of refrigeration is to develop technical solutions to produce temperatures below the ambient temperature. In other words, heat must be transported against its natural direction of flow. In order to generate and maintain this flow of energy, it is necessary to continuously supply energy to the refrigeration process.

Engineers have to deal with the issue of cooling in many areas. The removal of heat in manufacturing and production or air conditioning in buildings requires knowledge of refrigeration. Refrigeration offers a wide range of applications in machinery and plant manufacturing, as well as in many other specialist disciplines. Due to the wide range of applications, the requirements for technical implementation also vary.

We offer a comprehensive didactic concept on the topic of refrigeration. Our complete product range can be found in catalogue **3a (Refrigeration and air conditioning technology).**

The devices highlighted in blue can be found in this chapter.

Refrigeration	
Principles of cold production	ET 101, ET 352, ET 352.01, ET 480, ET 120, ET 122
Fundamentals of refrigeration	ET 915, ET 915.01, ET 915.02, ET 915.06, ET 915.07, ET 350, ET 400, ET 411C
Thermodynamics of the refrigeration cycle	ET 351C, ET 412C, ET 430, ET 441
Components of refrigeration	**Modular training systems**
	ET 900, ET 910, ET 910.10, ET 910.11
	Compressors
	ET 165, ET 432, ET 428
	Heat exchangers
	ET 431, ET 405
	Piping
	ET 460
	Primary and secondary controllers
	ET 426, ET 180, ET 181, ET 182
	Equipment studies and cutaway models
	ET 499.01, ET 499.02, ET 499.03, ET 499.12, ET 499.13, ET 499.14, ET 499.16, ET 499.18, ET 499.19, ET 499.21, ET 499.30, ET 499.25, ET 499.26
Heat pumps and ice store	**Heat pumps**
	ET 102, ET 405, HL 320.01
	Ice store
	ET 420
Electrical engineering	**Refrigeration controls**
	ET 144, ET 171
	Control of refrigeration systems
	ET 930
	Fault finding
	ET 170, ET 172, ET 174
Assembly, fault finding, maintenance	MT 210, ET 192, ET 422

Basic knowledge

Principles of cold production

Refrigeration describes the removal of heat from a space which is to be cooled. Thermal energy is transferred from the warmer to the colder medium due to a temperature difference. There are various principles, presented here, for generating this required temperature difference.

Compression refrigeration systems are the most common cooling systems found in practice. In a compression refrigeration system a refrigerant flows through the refrigerant circuit and is subject to different changes of state. The compression refrigeration system is based on the physical effect that thermal energy is required during the transition from the liquid to the gaseous state. The evaporator **2** extracts thermal energy from the room **1** to be cooled. The heat is transferred from the evaporator **2** to the condenser **4** by means of different pressures during evaporation and condensation. The thermal energy is released again by condensation of the refrigerant.

To increase the pressure, screw, scroll, turbo or vapour jet compressors can be used instead of the piston compressor **3** shown.

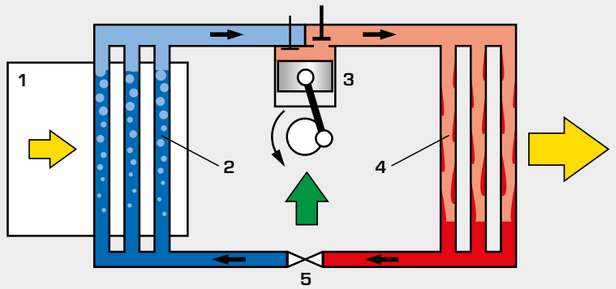

1 room to be cooled or process cooling, **2** evaporator, **3** compressor, **4** condenser, **5** expansion valve;
HP gaseous refrigerant, HP liquid refrigerant, LP liquid refrigerant, LP gaseous refrigerant, heat, mechanical work

The **Stirling refrigerator** is an absolute niche solution in practical application. It works according to the same principle as the Stirling engine, but with reverse direction of rotation. Although the principle of the Stirling engine has been known for more than 200 years, its application as a refrigerator is still in the field of research.

The Stirling refrigerator consists of a working cylinder **6** and a displacement cylinder **7**. A working gas is alternately compressed and expanded in the working cylinder. The compressed, hot gas releases its heat in the heat exchanger **4**. During expansion, the working gas cools down and absorbs heat on the cold side **2** of the displacement cylinder from the room **1** being cooled. Displacement piston **8** and working piston **6** are moved correspondingly phase-shifted via a crank mechanism **5**.

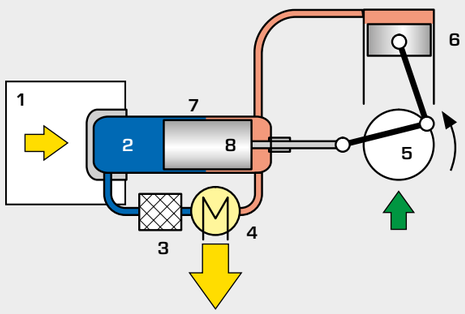

1 room being cooled or process cooling, **2** cold cylinder side,
3 recuperator, **4** heat exchanger, **5** crank mechanism,
6 working cylinder, **7** displacement cylinder, **8** displacement piston;
cold exhaust gas, hot exhaust gas,
heat, mechanical work

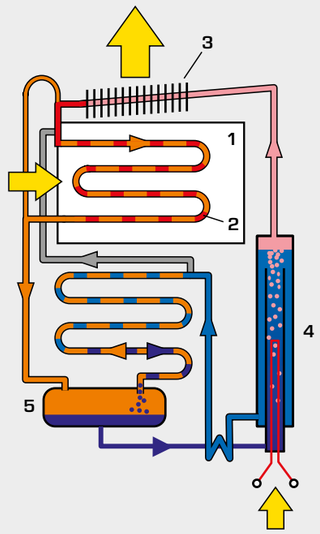

In contrast to the compression refrigeration system, an **absorption refrigeration system** uses two working media, one refrigerant and one solvent. The two working media are separated from each other in the generator **4** where thermal energy is added. The expelled refrigerant vapour flows into condenser **3** and is condensed. The refrigerant then evaporates at low pressure in the evaporator **2** and dissipates heat. The resulting refrigerant vapour flows into the absorber **5**, where it is absorbed by the solvent. The solution of refrigerant and solvent is pumped back into the generator.

The use of absorption refrigeration systems makes sense if thermal energy, e.g. waste heat, is available. In this case, cooling can be achieved by using waste heat.

Illustration using the combination of ammonia and water as an example

1 room to be cooled or process cooling, **2** evaporator,
3 condenser, **4** generator, **5** absorber;
ammonia vapour, liquid ammonia,
low ammonia solution, rich ammonia solution,
hydrogen, hydrogen and ammonia vapour, heat

Thermoelectric refrigeration plants are based on the Peltier effect. A Peltier element generates a temperature difference in an electrical current flow and can be used for heating or cooling, depending on the direction of flow.

Current is conducted through a thermoelectric element. One electrical contact heats up and the other one cools down. In order to increase the power, several thermoelectric elements are connected in series, arranged in such a way that cooling and heating contacts are each connected to a cover plate. During current flow, one of the plates extracts heat and transfers it to the other. The cold plate corresponds to the useful side of the thermoelectric refrigeration plant.

Peltier elements can generate very low temperatures. However, the efficiency decreases as the temperature difference increases. Peltier elements are easy to adjust, have no moving parts and no toxic fuels.

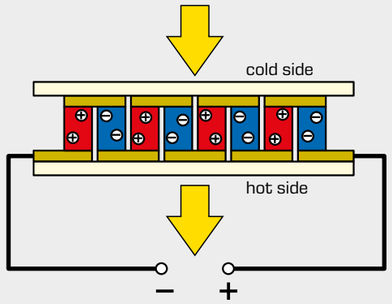

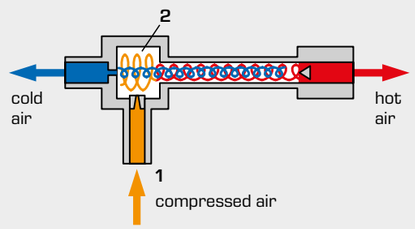

1 inlet opening, **2** vortex chamber

The **vortex cold generator** has an exceptional operating principle. Compressed air is introduced into the inlet opening **1**. The compressed air is introduced tangentially into a vortex chamber **2** and is set in rotation. A cold air flow forms in the centre of this vortex, while the outer layer of the vortex heats up. The cold air flow is diverted from the centre of the vortex and used for cooling.

The advantage of a vortex cold generator is its particularly simple design, which has no moving components and does not require toxic fuels or power supply. The low efficiency is a disadvantage

ET 400
Refrigeration circuit with variable load

Learning objectives/experiments

- design and components of a refrigeration system
  - compressor
  - condenser
  - thermostatic expansion valve
  - evaporator
  - pressure switch
- representation of the thermodynamic cycle in the log p-h diagram
- determination of important characteristic variables
  - coefficient of performance
  - refrigeration capacity
  - compressor work
- operating behaviour under load

Description

- **refrigeration circuit with water circuit as load**
- **defined cooling load via controlled water temperature**
- **display of all relevant values at the location of measurement**

ET 400 examines a refrigeration circuit under an adjustable load. The refrigeration circuit consists of a compressor, a condenser with fan, a thermostatic expansion valve and a coaxial coil heat exchanger as evaporator. A water circuit serves as load, consisting of a tank with a heater and a pump. The temperature in the tank is adjusted at a controller.

The purpose of this refrigeration circuit is the production of cold water. The water flows through the jacket of the coaxial coil heat exchanger, transfers heat to the refrigerant and thereby cools down.

All relevant measured values are recorded by sensors. Displays at the respective locations of measurement indicate the measured values. This makes it easy to assign the measured values to the process. The simultaneous transmission of the measured values to a data recording software enables easy analysis and the representation of the process in the log p-h diagram. The software also displays the key characteristic variables of the process, such as the compressor pressure ratio and the coefficient of performance.

The clearly arranged components aid understanding.

ET 400
Refrigeration circuit with variable load

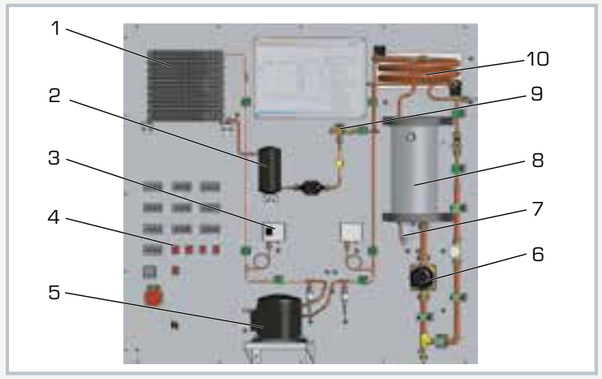

1 expansion valve, 2 condenser with fan, 3 pressure sensor, 4 process schematic, 5 pressure switch, 6 compressor, 7 pump, 8 heater controller, 9 warm water tank with heater, 10 evaporator

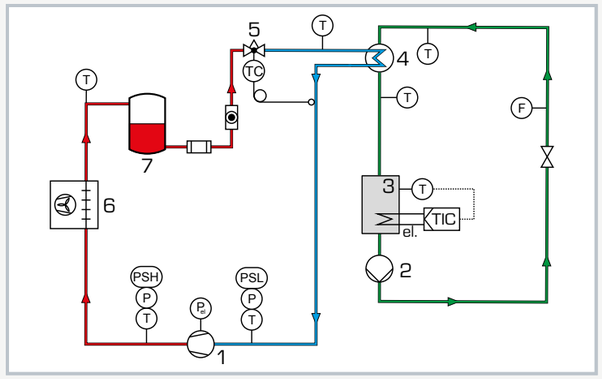

1 compressor, 2 pump, 3 warm water tank with heater, 4 evaporator, 5 expansion valve, 6 condenser, 7 receiver; T temperature, P pressure, F flow rate, TIC temperature controller, PSH, PSL pressure switch; blue-red: refrigeration circuit, green: water circuit

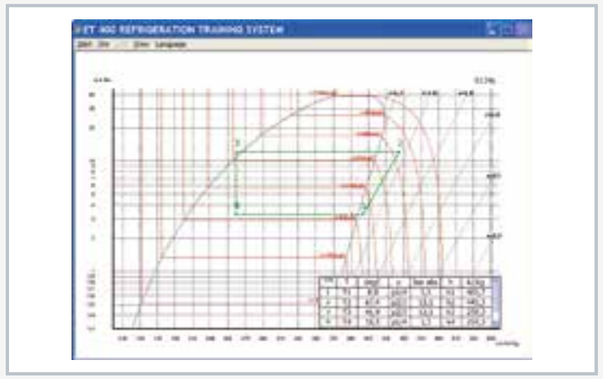

Software screenshot: log p-h diagram

Specification

[1] investigation of a refrigeration circuit with water circuit as load
[2] refrigeration circuit with compressor, condenser with fan, thermostatic expansion valve and coaxial coil heat exchanger as evaporator
[3] water circuit with pump, tank with heater as cooling load at the evaporator
[4] heater with controller to adjust the tank temperature
[5] recording of the refrigerant mass flow rate as a function of the pressure difference
[6] recording of all relevant measured values and display directly at the location of measurement
[7] GUNT software for data acquisition via USB under Windows 7, 8.1, 10
[8] refrigerant R134a, CFC-free

Technical data

Compressor
- refrigeration capacity: approx. 380W at 5/40°C

Evaporator
- refrigerant volume: 0,4L
- water volume: 0,8L

Condenser
- transfer area: approx. 1,25m^2
- fan power consumption: 4x 12W

Pump
- max. flow rate: 1,9m^3/h
- max. head: 1,4m

Tank
- volume: approx. 4,5L
- heater: approx. 450W

Measuring ranges
- pressure:: 2x -1...15bar
- power: 1x 0...750W
- temperature: 6x 0...100°C
- flow rate (water): 1x 0,05...1,8L/min

230V, 50Hz, 1 phase
230V, 60Hz, 1 phase
120V, 60Hz, 1 phase
UL/CSA optional
LxWxH: 1620x790x1910mm
Weight: approx. 192kg

Required for operation

PC with Windows recommended

Scope of delivery

1 trainer
1 GUNT software CD + USB cable
1 set of instructional material

ET 120
Cooling using the Peltier effect

Description

- **demonstration of the thermoelectric effect**
- **creation of energy balances**

The experimental unit demonstrates cooling using the Peltier effect. Peltier elements utilise the thermoelectric effect of some semiconductors. The thermoelectric effect is the reverse of the known thermopower effect which is e.g. used when measuring temperatures using thermocouplers. If current flows through a Peltier element, one end of the semiconductor becomes hot and the other cold. By a suitable connection of p- and n-doped semiconductor materials the refrigeration capacity can be increased sufficiently to be usable.

The benefits of cold production using Peltier elements are: Peltier elements are wear and maintenance-free, noiseless, independent of position and easy to adjust in their refrigeration capacity via the supply voltage. In addition, no refrigerants are required. Peltier elements are used for small capacities in thermography as beverage chillers or in medical engineering. Their low efficiency is a disadvantage.

The experimental setup is clearly arranged on the front of the experimental unit. The central component of the system is a Peltier element. The heating and refrigeration capacity of the Peltier element are dissipated via water flows. Measuring the respective flow rate and the inlet and outlet temperatures allows for the heat flows to be determined. The supplied electrical power is determined using a current and voltage measurement.

Due to the closed water circuit the experimental unit can also be operated for short periods of time without being connected to the water mains.

Learning objectives/experiments

- function and operation of a Peltier element
  - for cooling
  - as heat pump
- determination of the refrigeration and heating capacity
- recording typical characteristics, such as refrigeration capacity, via temperature differences
- energy balance
- calculating the coefficient of performance

ET 120
Cooling using the Peltier effect

1 cold water flow meter, 2 temperature displays cold side, 3 water tank temperature controller, 4 voltage and current displays, 5 adjustment of the electrical power, 6 Peltier element with heat exchangers, 7 hot water flow meter, 8 temperature displays hot side, 9 water tank cover

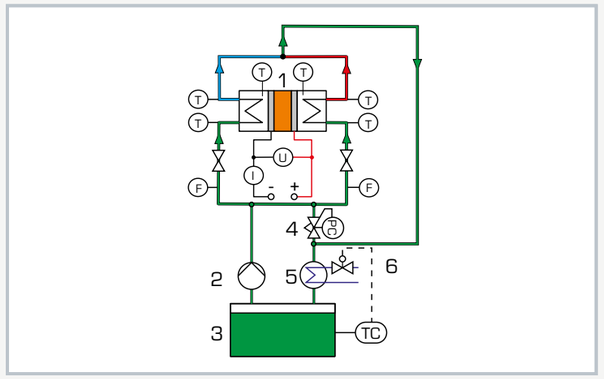

1 Peltier element, 2 pump, 3 tank, 4 overflow valve, 5 heat exchanger, 6 solenoid valve; T temperature, F flow rate; U, I supply voltage and current measurement; blue: water cold side, red: water hot side, green: mixed water

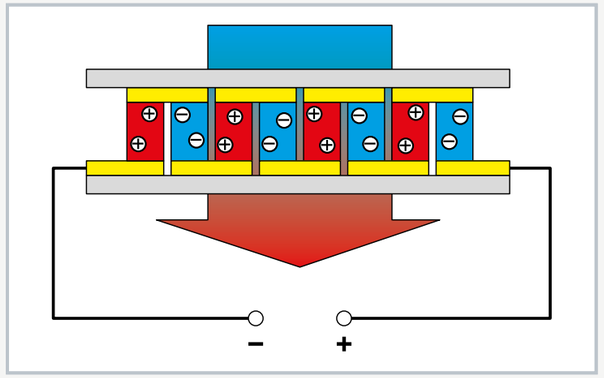

Principle of operation: semiconductors connected electrically in series transport the heat from the cold side (blue) to the hot side (red)

Specification

[1] functional model of a Peltier refrigeration system
[2] experimental unit with clear design of all components at the front
[3] water-cooled Peltier element
[4] shared water circuit for heating and cooling with tank, pump and flow meters
[5] electrical power freely adjustable via potentiometer
[6] digital displays for temperature, current and voltage
[7] flow meter measurement of the water flows via rotameters

Technical data

Peltier element
- max. refrigeration capacity: 191,4W
- max. current: 22,6A
- max. voltage: 16,9V
- max. temperature difference: 77,8K
- hot side temperature: 50°C

Pump
- power consumption: 120W
- max. flow rate: 1000L/h
- max. head: 30m

Water tank
- content: 7L

Measuring ranges
- current: 0...20A
- voltage: 0...200V
- temperature: 2x -30...80°C, 4x 0...100°C
- flow rate: 1x 2...27L/h, 1x 15...105L/h

230V, 50Hz, 1 phase
230V, 60Hz, 1 phase
120V, 60Hz, 1 phase
UL/CSA optional
LxWxH: 1000x640x600mm
Weight: approx. 60kg

Required for operation

water connection
drain

Scope of delivery

1 experimental unit
1 set of instructional material

ET 352
Vapour jet compressor in refrigeration

Learning objectives/experiments

- understanding compression refrigeration systems based on the vapour jet method
- clockwise and anticlockwise Rankine cycle
- energy balances
- calculation of the coefficient of performance of the refrigeration circuit
- thermodynamic cycle in the log p-h diagram
- operating behaviour under load
- solar thermal vapour jet refrigeration

Description

- **refrigeration system with vapour jet compressor**
- **cold production using heat**
- **transparent condenser and evaporator**
- **together with ET 352.01 and HL 313: using solar heat as drive energy for the vapour jet compressor**

Unlike standard compression refrigeration systems, vapour jet refrigeration machines do not have a mechanical but a vapour jet compressor. This makes it possible to use different heat sources for cold production. Such sources could e.g. be solar energy or process waste heat.

The system includes two refrigerant circuits: one circuit is used for cold production (refrigeration cycle), the other circuit is used for the generation of motive vapour (vapour cycle).

The vapour jet compressor compresses the refrigerant vapour and transports it to the condenser. A transparent tank with a water-cooled pipe coil serves as condenser.

In the refrigeration cycle some of the condensed refrigerant flows into the evaporator connected to the intake side of the vapour jet compressor. The evaporator is a so-called flooded evaporator where a float valve keeps the filling level constant. The refrigerant absorbs the ambient heat or the heat from the heater and evaporates. The refrigerant vapour is aspirated by the vapour jet compressor and compressed again.

In the vapour cycle a pump transports the other part of the condensate into a vapour generator. An electrically heated tank with water jacket evaporates the refrigerant. The generated refrigerant vapour drives the vapour jet compressor. Alternatively to the electric heater, solar heat can be used as drive energy by using ET 352.01 and the solar thermal collector HL 313.

Relevant measured values are recorded by sensors, displayed and can be processed onto a PC. The heater power at the evaporator is adjustable. The cooling water flow rate at the condenser is adjusted using a valve.

ET 352
Vapour jet compressor in refrigeration

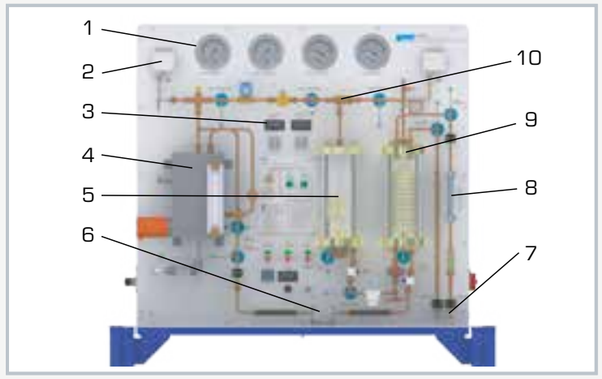

1 manometer, 2 pressure switch, 3 displays and controls, 4 vapour generator, 5 evaporator, 6 pump, 7 cooling water connections, 8 flow meter, 9 condenser, 10 vapour jet compressor

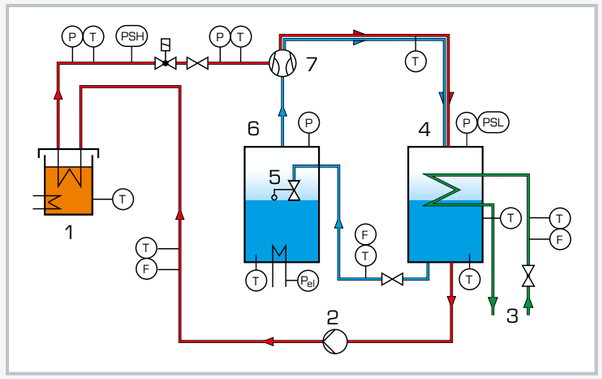

1 vapour generator, 2 pump, 3 cooling water connections, 4 condenser, 5 float valve, 6 evaporator, 7 vapour jet compressor; T temperature, P pressure, PSL, PSH pressure switch, F flow rate, P_{el} power; red: vapour cycle, blue: refrigeration cycle, green: cooling water

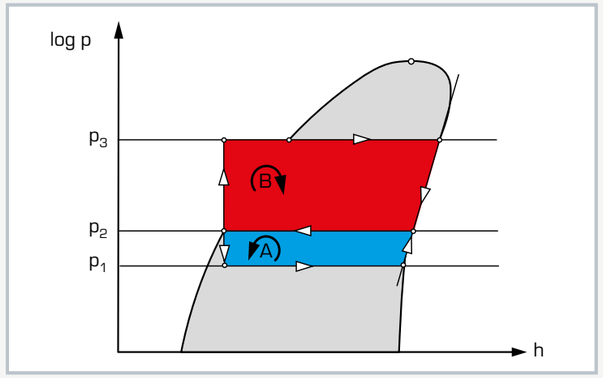

log p-h diagram: A refrigeration cycle, B vapour cycle, p_1 pressure in the evaporator, p_2 pressure in the condenser, p_3 pressure in the vapour generator

Specification

[1] investigation of a vapour jet compressor
[2] refrigeration circuit with condenser, evaporator and vapour jet compressor for refrigerant
[3] vapour circuit with pump and vapour generator for operating the vapour jet compressor
[4] transparent tank with water-cooled pipe coil as condenser
[5] transparent tank with adjustable heater as evaporator
[6] flooded evaporator with float valve as expansion element
[7] vapour generator with heated water jacket (electrically or solar thermally using ET 352.01, HL 313)
[8] refrigerant Solkatherm SES36, CFC-free
[9] GUNT software for data acquisition via USB under Windows 7, 8.1, 10

Technical data

Vapour jet compressor
- d_{min} convergent-divergent nozzle: approx. 1,7mm
- d_{min} mixing jet: approx. 7mm

Condenser
- tank: approx. 3,5L
- pipe coil area: approx. 0,17m²

Evaporator
- tank: approx. 3,5L
- heater power: 4x 125W

Vapour generator
- refrigerant tank: approx. 0,75L
- water jacket: approx. 9L
- heater power: 2kW

Pump
- max. flow rate: approx. 1,7L/min
- max. head: approx. 70mWS

Measuring ranges
- temperature: 12x -20...100°C
- pressure: 2x 0...10bar; 2x -1...9bar
- flow rate: 3x 0...1,5L/min
- power: 1x 0...750W, 1x 0...3kW

230V, 50Hz, 1 phase
230V, 60Hz, 1 phase, 230V, 60Hz, 3 phases
UL/CSA optional
LxWxH: 1460x790x1890mm
Weight: approx. 225kg

Required for operation

water connection, drain, PC with Windows recommended

Scope of delivery

1 trainer
1 set of accessories
1 refrigerant (4kg Solkatherm SES36)
1 GUNT software CD + USB cable
1 set of instructional material

ET 122
Vortex cooling device

Description

- **demonstration of the vortex principle**
- **cooling and heating using compressed air**

The experimental unit generates cold and hot air with the aid of ordinary compressed air. The central element of the experimental unit is a vortex cooling device also known as a vortex tube. In the vortex tube the tangentially incoming compressed air is moved in rapid rotation. This creates a cold and hot air flow in the vortex tube which leaves the vortex tube at opposite ends.

A vortex cooling device does not have any moving parts, is maintenance-free and immediately ready for operation. The vortex cooling device is used for the convective cooling of high-speed tools, the air conditioning of protection suits and the cooling of switch cabinets. It is particularly suited for use in explosive environments. One benefit here is that the vortex cooling device does not require an electric power supply.

The inlet pressure is measured using a manometer. The compressed air volume and the outlet volume of the hot air flow are each measured using a rotameter. The inlet temperature of the compressed air and the outlet temperatures of the cold and hot air flows are displayed digitally.

Learning objectives/experiments

- function and operation of a vortex cooling device
- air flow distribution dependent on the temperature of the cold air flow
- effect of the inlet pressure on heating and refrigeration capacity

ET 122
Vortex cooling device

1 manometer, 2 vortex tube, 3 cold air outlet, 4 compressed air connection, 5 process schematic, 6 flow meter, 7 temperature displays, 8 hot air outlet

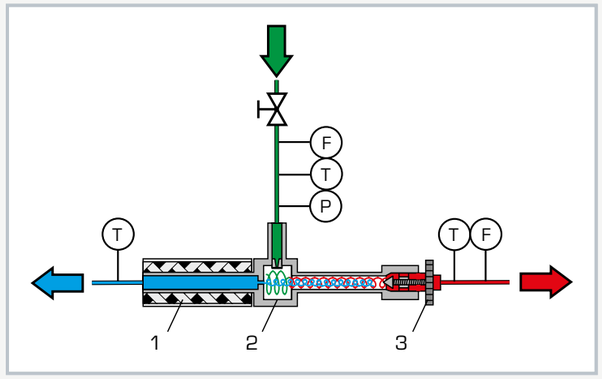

1 sound absorber, 2 vortex tube, 3 valve for adjusting the temperature of colt air; T temperature, P pressure, F flow rate;
blue: cold air, red: hot air, green: compressed air

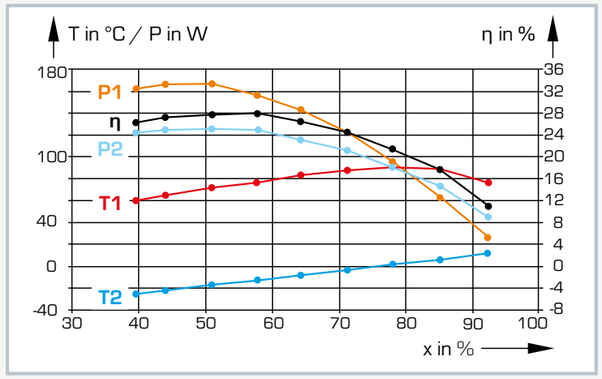

Temperature curve, capacity and efficiency depending on the cold air ratio; red T1: hot air, blue T2: cold air, orange P1: heat capacity, light blue P2: refrigeration capacity, black: cold air efficiency, x cold air ratio

Specification

[1] functional model for cold air generation using a vortex cooling device (vortex tube) with the aid of compressed air
[2] experimental unit with clear design of all components at the front
[3] simple design, no moving components, wear-free
[4] measuring of the compressed air inlet pressure by manometer
[5] flow rate measurement of compressed air and exhaust hot air by rotameters
[6] digital displays for inlet temperature and outlet temperature of cold and hot air

Technical data

Vortex cooling device
- inlet pressure: 5,5bar
- air consumption: max. 420L/min
- refrigeration capacity: max. 267W (230kcal/h)
- minimum temperature: -40°C
- maximum temperature: 110°C

Measuring ranges
- temperature: 3x -50...150°C
- pressure: 0...10bar
- flow rate: 2x 2...25m^3/h

230V, 50Hz, 1 phase
230V, 60Hz, 1 phase
120V, 60Hz, 1 phase
LxWxH: 1000x600x710mm
Weight: approx. 50kg

Required for operation

compressed air: min. 6bar, 25m^3/h

Scope of delivery

1 experimental unit
1 set of accessories
1 set of instructional material

ET 480
Absorption refrigeration system

Description

- **model of an absorption refrigeration system**
- **boiler operated alternatively by gas or electrically**
- **adjustable heating at the evaporator serves as cooling load**

Absorption refrigeration systems operate using thermal energy. They use the principle of liquids evaporating already at low temperatures when pressure is reduced. This basic principle is demonstrated in the experimental unit ET 480 with the example of an ammonia-water solution with the ammonia acting as refrigerant.

In the evaporator the liquid ammonia evaporates and withdraws heat from the environment. To keep the evaporation pressure low, the ammonia vapour in the absorber is absorbed by the water. In the next step, ammonia is permanently removed from the high concentration ammonia solution to prevent the absorption process from being halted. For this purpose, the high concentration ammonia solution is heated in a generator until the ammonia evaporates again. In the final step, the ammonia vapour is cooled in the condenser to the base level, condenses and is returned to the evaporator.

The low concentration ammonia solution flows back to the absorber. To maintain the pressure differences in the system, hydrogen is used as an auxiliary gas.

In process technology systems the resulting waste heat can be used for cooling. In small mobile systems, such as a camping refrigerator or minibar in a hotel, the required heat is generated electrically or by gas burner. Another benefit of absorption refrigeration systems is their silent operation.

ET 480 demonstrates the functional principle of an absorption refrigeration system with its main components: evaporator, absorber, boiler as generator with bubble pump, condenser. The boiler can alternatively be operated with gas or electrically. Another electric heater at the evaporator generates the cooling load.

Temperatures in the refrigeration circuit and the heating power at the boiler and at the evaporator are recorded and displayed digitally.

Learning objectives/experiments

- demonstrate the basic principle of an absorption refrigeration system
- absorption refrigeration system and its main components
- operating behaviour under load

ET 480
Absorption refrigeration system

1 condenser, 2 evaporator with heater, 3 absorber, 4 tank, 5 gas burner, 6 pressure reducing valve for propane gas operation, 7 boiler with bubble pump to separate the ammonia, 8 displays and controls

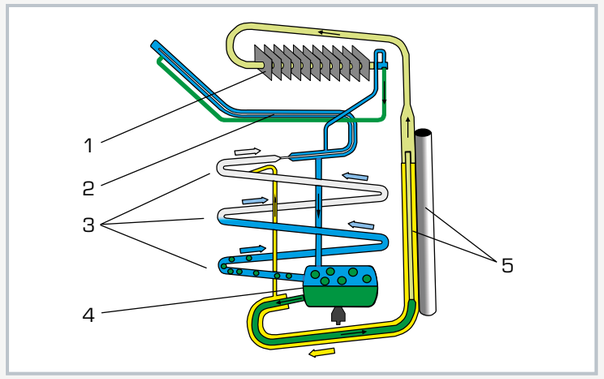

1 condenser, 2 evaporator, 3 absorber, 4 tank, 5 boiler with bubble pump;
green: high concentration ammonia solution, yellow: low concentration ammonia solution, blue: gas mixture ammonia-hydrogen

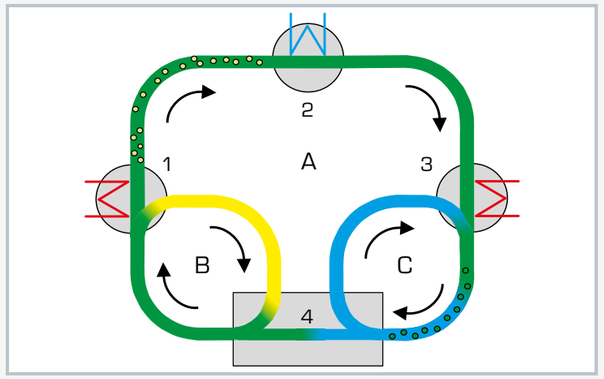

1 boiler with bubble pump, 2 condenser, 3 evaporator, 4 absorber;
A: ammonia circuit, B: water circuit, C: hydrogen circuit

Specification

[1] operation of an absorption refrigeration system
[2] main system components: evaporator, absorber, boiler with bubble pump, condenser
[3] ammonia-water solution as working medium, hydrogen as auxiliary gas
[4] boiler to separate ammonia
[5] bubble pump for transportation in the circuit
[6] adjustable electrical heater at the evaporator serves as cooling load
[7] boiler is alternatively heated by electrical heater or gas burner
[8] piezoelectric igniter for gas operation
[9] digital displays for temperature and power

Technical data

Working medium: ammonia-water solution
Auxiliary gas: hydrogen
Electric heater: 125W
Gas burner, adjustable: propane gas
Evaporator heater, adjustable: 50W

Measuring ranges
- temperature: 4x -80...180°C
- power: 0...150W

230V, 50Hz, 1 phase
230V, 60Hz, 1 phase
120V, 60Hz, 1 phase
UL/CSA optional
LxWxH: 750x450x750mm
Weight: approx. 47kg

Required for operation

propane gas: 30...50mbar

Scope of delivery

1 experimental unit
1 hose
1 pressure reducer
1 set of instructional material

Basic knowledge

Main elements of a compression refrigeration system

In a compression refrigeration system, heat is transported from one location to another due to a temperature difference. The principle of heat transport in a compression refrigeration system can be described using the example of the basic function of the four main components.

The **expansion valve** is located between the condenser and the evaporator. Its task is to expand the pressurised refrigerant. The expansion to a low pressure is necessary so that the refrigerant can evaporate again at low temperatures. A portion of the refrigerant evaporates due to the pressure reduction at the expansion valve, which results in a drop in temperature. In addition, the superheating of the refrigerant in the evaporator can be achieved by using the expansion valve. The superheating ensures complete evaporation of the refrigerant.

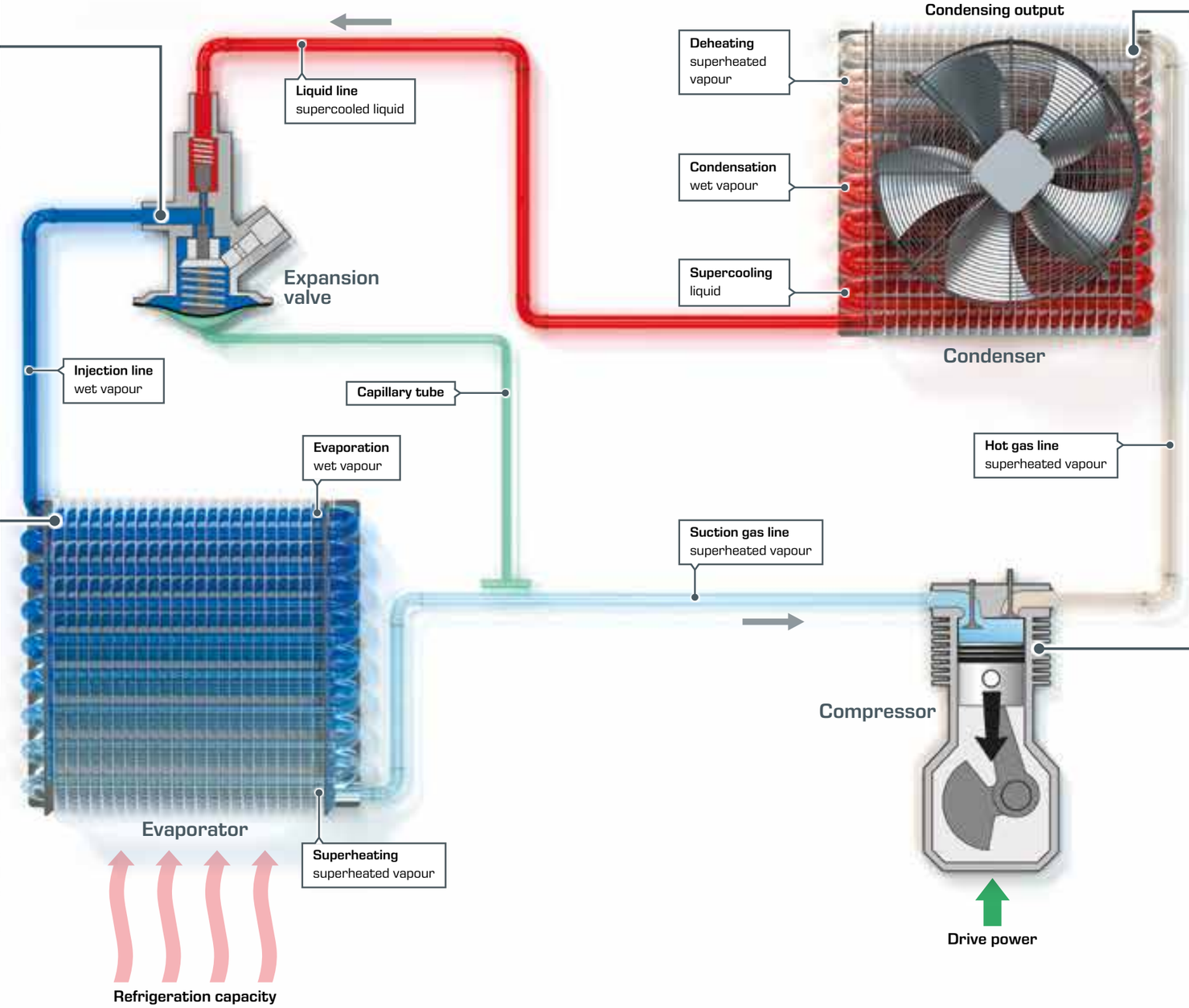

In the **condenser**, the heat is released from the refrigerant and transferred to the environment. The refrigerant vapour condenses due to heat dissipation. The refrigerant vapour must have a higher temperature than the environment. This required condensing temperature is directly proportional to the pressure generated by the compressor. Condensation takes place at constant high pressure.

In the **evaporator**, heat is extracted from the environment or a fluid and transferred to the refrigerant. The refrigerant evaporates during this process. In this case, the useful side is located in a refrigeration plant. The temperature of the refrigerant remains constant despite heat absorption. The absorbed energy is used for the phase change. In order for evaporation to be able to take place, the temperature of the liquid refrigerant must be lower than the fluid being cooled. This required evaporation temperature is directly proportional to the pressure which is specifically achieved by the suction effect of the compressor and the contraction of the expansion valve.

The **compressor** is the drive unit of a compression refrigeration system. It extracts the gaseous refrigerant from the evaporator, increases the pressure of the refrigerant vapour and conveys the gaseous refrigerant into the condenser. The compressor must raise the pressure of the refrigerant vapour to a sufficiently high pressure level so that the refrigerant can condense in the condenser by releasing heat.

Basic knowledge

Refrigeration cycle

The refrigeration cycle can be described by a sequence of state changes of a refrigerant. This sequence runs periodically and always achieves the initial state (cyclic process). In refrigeration, the state variables such as pressure, temperature and density are important as is the dependence of these state variables on each other.

The thermodynamic processes in the refrigeration cycle are complex. Calculation using formulae and tables requires a considerable amount of effort due to the three different states of the refrigerant from liquid, boiling and gaseous. Therefore, for reasons of simplification, the log p-h diagram was introduced.

Using a log p-h diagram, the various state variables can be represented graphically according to their dependencies. The thermodynamic state variables can be read directly at each state point and are available for further calculations. Heat quantities, technical work or pressure differences of a change of state are shown as measurable lines. Using the log p-h diagram greatly simplifies thermodynamic calculations and is essential for understanding how refrigeration plants work.

On the basis of this knowledge, our software for refrigeration equipment displays the respective log p-h diagram in real time. Changes to operating parameters can be read directly in the diagram and allow a valuable insight into the formation of the thermodynamic states, which otherwise can only be appreciated statically.

In general, a log p-h diagram shows the aggregate state of a substance, depending on pressure and heat. For refrigeration, the diagram is reduced to the relevant regions of **liquid** and **gaseous** as well as their **mixed form**.

The vertical axis shows the logarithmic pressure and the horizontal axis shows the specific enthalpy with linear scaling. Accordingly, the isobars are horizontal and the isenthalps are vertical. The logarithmic scaling makes it possible to represent processes with large pressure differences.

The saturated vapour curve and the boiling point curve meet at the critical point **K**.

The log p-h diagram shows the thermodynamic state variables in the respective phase.

- pressure **p**
- specific enthalpy **h**
- temperature **T**
- specific volume **v**
- specific entropy **s**
- gas content **x**

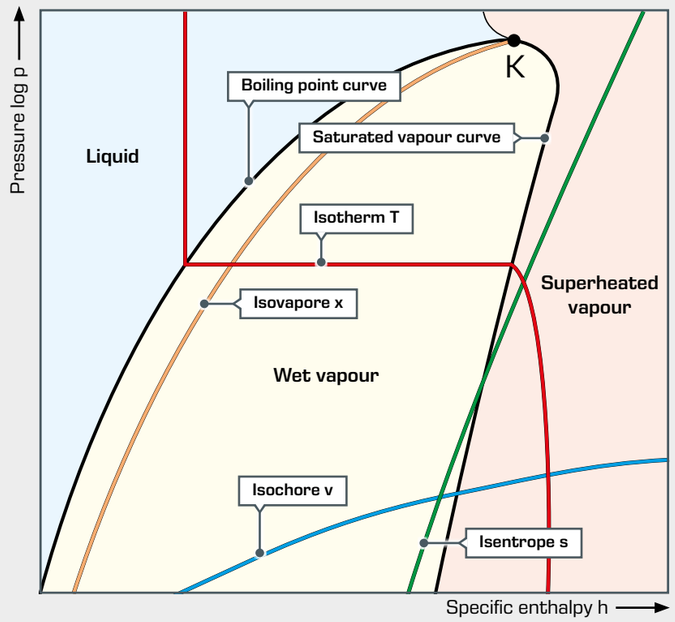

The refrigeration cycle in the log p-h diagram

The distinctive feature of the refrigeration cycle is that it runs counter-clockwise, i.e. opposite to the joule or steam cycle. A change of state occurs when the refrigerant flows through one of the four main components of the refrigeration plant. The actual refrigeration cycle consists of the following changes of state:

1 – 2	polytropic compression to the condensing pressure (for comparison 1 – 2' isentropic compression)
2 – 2''	isobaric cooling, deheating of the superheated vapour
2'' – 3'	isobaric condensation
3' – 3	isobaric cooling, supercooling of the liquid
3 – 4	isenthalpic expansion to the evaporation pressure
4 – 1'	isobaric evaporation
1' – 1	isobaric heating, superheating of the vapour

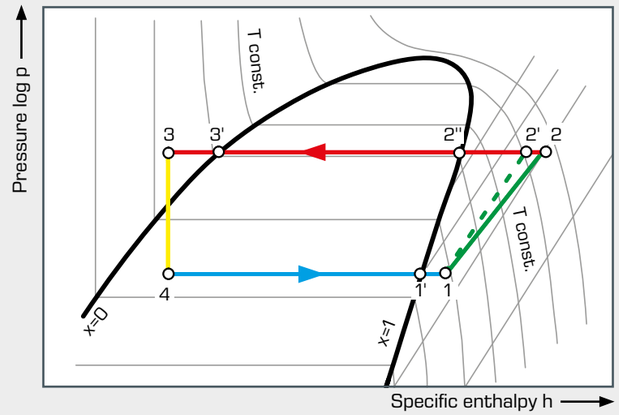

Refrigeration cycle in the log p-h diagram

compressor, condenser, expansion valve, evaporator

In addition, pressure losses also occur in the actual refrigeration cycle, so that evaporation and condensation do not take place exactly horizontally (isobarically).

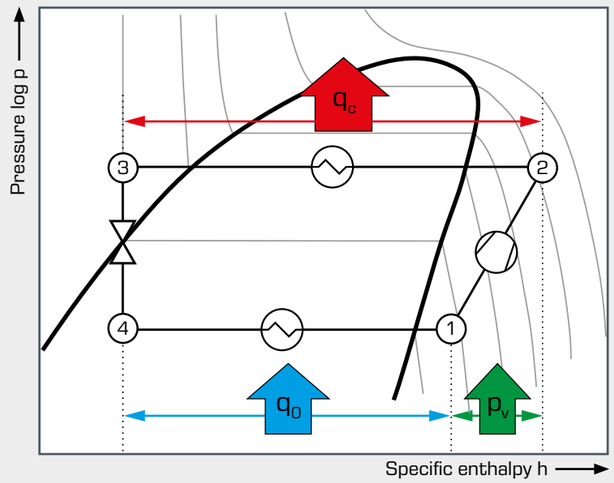

The **specific amounts of energy** that can be absorbed and released to reach the state points are marked as lines in the log p-h diagram. The specific enthalpy **h** can be read for each separate state point directly from the log p-h diagram.

If the mass flow rate of the refrigerant is known, the associated **thermal output** can be calculated by means of the specific enthalpy at the respective state point.

- the line $h_1 - h_4 = q_0$ corresponds to the cooling and results in the **refrigeration capacity** by multiplication with the the mass flow rate.
- the line $h_2 - h_1 = p_v$ corresponds to the technical work of the compressor, which is actually transferred to the refrigerant.
- the line $h_2 - h_3 = q_c$ corresponds to the emitted heat and results in the **condenser capacity** by multiplication with the the mass flow rate. It is the waste heat from a refrigeration plant.

Basic knowledge

Representation of a refrigeration cycle in the log p-h diagram

This digression is designed to help you understand the functional relationship between the components of the refrigeration plant and the thermodynamic processes. The following state variables are required to display a refrigeration cycle in the log p-h diagram:

- p_1 evaporation pressure
- p_2 condensing pressure
- T_1 temperature at the compressor inlet
- T_2 temperature at the condenser inlet
- T_3 temperature at the condenser outlet

Step 1: plot limiting isobars

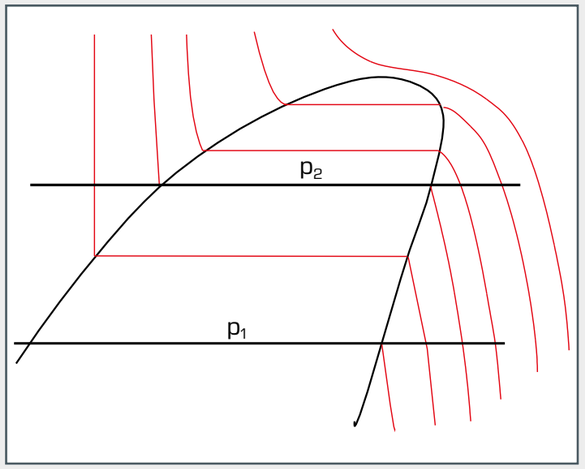

First of all the isobaric changes of state have to be plotted in the diagram.

- p_1 evaporation pressure
- p_2 condensing pressure

In doing so it is important that absolute pressures are plotted in the diagram.

Step 2: plot compression process

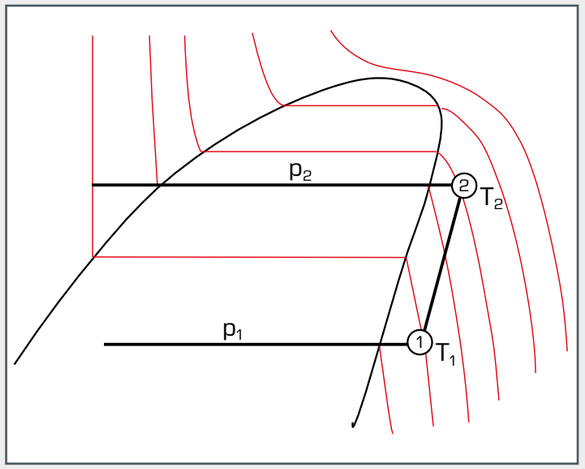

After the limiting isobars have been plotted in the diagram, the compression process can now be plotted.

- identifying the point of intersection of the isobars p_1 with the temperature at the compressor inlet T_1 gives the state point **1**.
- identifying the point of intersection of the isobars p_2 with the temperature at the condenser inlet T_2 gives the state point **2**.
- the connection between the two state points **1** and **2** describes the compression process.

Step 3: plot the isenthalpic expansion

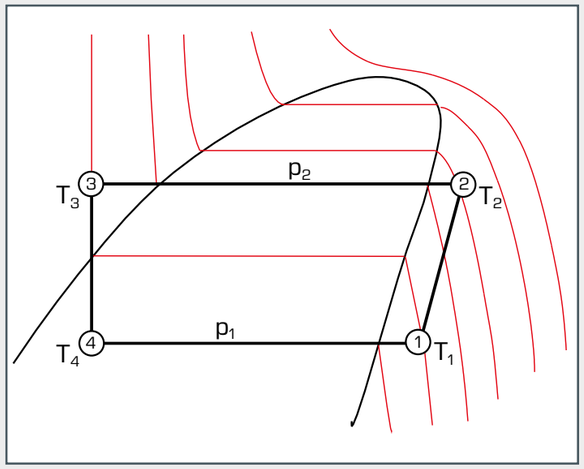

The expansion process is plotted in the diagram as follows:

- identifying the point of intersection of the isobars p_2 with the temperature T_3 at the condenser outlet gives the state point **3**.

The expansion is an isenthalpic process. Therefore, the previously marked intersection point can be connected to the isobars p_1 by a vertical line.
This results in the last state point **4** with the evaporation temperature T_4.

Step 4: reveal the specific enthalpy values

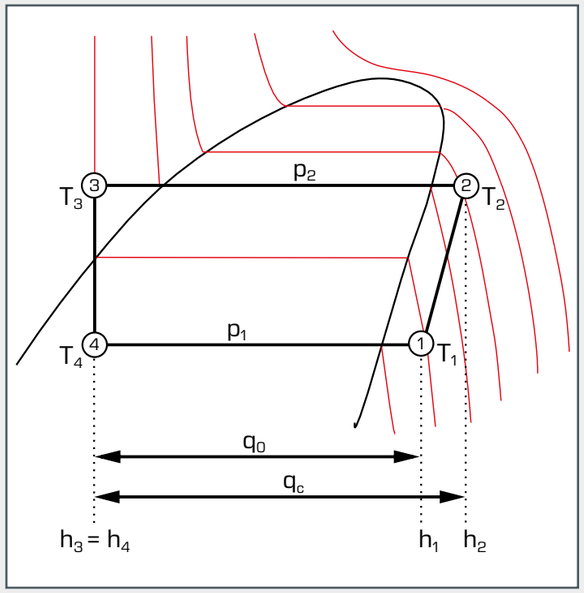

When calculating operating states of a refrigeration plant, it is necessary to determine the specific enthalpies of the individual changes of state.
The procedure is as follows:

The specific enthalpy can be read off using a vertical connection of the state points and the x-axis.

- h_1 spec. enthalpy after evaporator
- h_2 spec. enthalpy after compressor
- h_3 spec. enthalpy after condenser
- h_4 spec. enthalpy after expansion valve

The specific refrigeration capacity q_0 and the specific condensation capacity q_c can be read directly from the log p-h diagram.

specific refrigeration capacity $q_0 = h_1 - h_4$

specific condensation capacity $q_c = h_2 - h_3$

ET 350
Changes of state in the refrigeration circuit

Description

- **refrigeration circuit demonstrated clearly**
- **transparent components offer insights into the changes of state**
- **energetic analyses of the refrigeration cycle**

In a compression refrigeration system a refrigerant flows through the refrigeration circuit and is subject to different changes of state. Here, the physical effect is used that during the transition of the refrigerant from a liquid to a gaseous state energy is required which is removed from the environment (evaporation enthalpy).

The experimental unit ET 350 represents a typical refrigeration circuit consisting of a hermetic piston compressor, condenser, expansion valve and evaporator. The evaporator and condenser are transparent to provide good monitoring of the phase transition process during evaporation and condensation. The operation of the float valve as expansion valve is also easy to observe. Before the entry into the evaporator the aggregate state of the refrigerant can be monitored at a sight glass. A water circuit cools the condenser or supplies the cooling load for the evaporator. Cold and hot water and refrigerant flows are adjustable.

The low pressure level of the refrigerant SES36 used permits the use of an evaporator and condenser out of glass. The refrigerant is CFC-free and environmentally friendly.

Temperatures and pressures are recorded and displayed. The key points of the cyclic process can be read and entered into a log p-h diagram. The power of the compressor and flow rates of the water flows and the refrigerant are also indicated.

Learning objectives/experiments

- design and operation of a compression refrigeration system
- observe the evaporation and condensation of the refrigerant
- represent and understand the refrigeration cycle in the log p-h diagram
- energy balances
- calculation of the coefficient of performance

ET 350
Changes of state in the refrigeration circuit

1 pressure switch, 2 flow meter, 3 condenser, 4 expansion valve, 5 compressor, 6 evaporator, 7 sight glass, 8 temperature display, 9 manometer

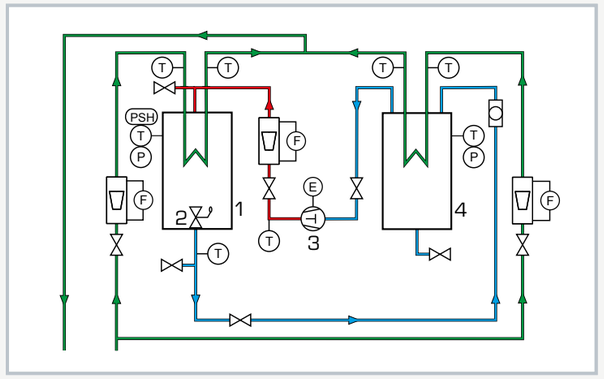

1 condenser, 2 expansion valve, 3 compressor, 4 evaporator; T temperature, P pressure, E electrical power, F flow rate, PSH pressure switch; blue: low pressure, red: high pressure, green: water

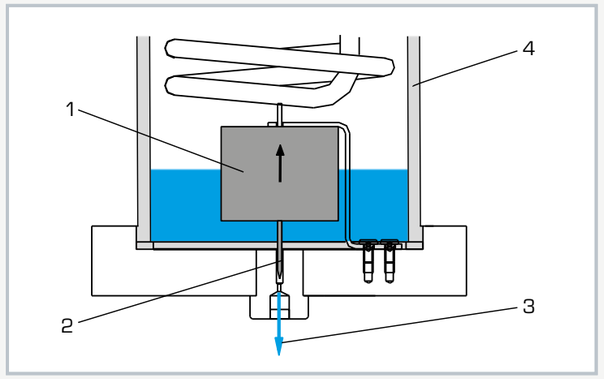

Expansion valve in the shape of a float valve: 1 float lifts the needle from the valve seat, 2 needle, 3 refrigerant escapes, 4 tank

Specification

[1] demonstration of the processes in a refrigeration circuit
[2] for better process monitoring the evaporator and condenser are of transparent design
[3] evaporator and condenser with pipe coil
[4] expansion valve in the shape of a float valve
[5] pressure switch to protect the compressor
[6] temperature sensor, power meter, manometer in the refrigeration circuit, flow meter for hot and cold water and refrigerant
[7] safety valves at the evaporator and condenser
[8] refrigerant Solkatherm SES36, CFC-free

Technical data

Hermetic piston compressor
- capacity: 18,3cm^3

Evaporator capacity: approx. 2800mL
Condenser capacity: approx. 2800mL

Measuring ranges
- temperature: 8x -20...200°C
- pressure: 2x -1...1,5bar
- flow rate (water): 2x 0...48L/h
- flow rate (refrigerant): 1x 0...700L/h
- power:: 0...1200W

230V, 60Hz, 1 phase
120V, 60Hz, 1 phase
UL/CSA optional
LxWxH: 1200x500x900mm
Weight: approx. 110kg

Required for operation

water connection, drain

Scope of delivery

1 experimental unit
3,5 kg refrigerant Solkatherm SES36
1 set of supply hoses
1 set of instructional material

ET 102
Heat pump

Learning objectives/experiments

- design and operation of an air-to-water heat pump
- representation of the thermodynamic cycle in the log p-h diagram
- energy balances
- determination of important characteristic variables
  - compressor pressure ratio
  - ideal coefficient of performance
  - real coefficient of performance
- dependence of the real coefficient of performance on the temperature difference (air-to-water)
- operating behaviour under load

Description

- **utilisation of ambient heat for water heating**
- **display of all relevant values at the location of measurement**

With the air-to-water heat pump ET 102 the ambient heat of the air is used to heat water.

The heat pump circuit consists of a compressor, an evaporator with fan, a thermostatic expansion valve and a coaxial coil heat exchanger as condenser. All components are clearly arranged in the trainer.

The compressed refrigerant vapour condenses in the outer pipe of the condenser and thereby discharges heat to the water in the inner pipe. The liquid refrigerant evaporates at low pressure in the finned tube evaporator and thereby absorbs heat from the ambient air.

The hot water circuit consists of a tank, a pump and the condenser as heater. For a continuous operation the generated heat is dissipated via an external cooling water connection. The cooling water flow rate is set via a valve and measured.

All relevant measured values are recorded by sensors and displayed. The simultaneous transmission of the measurements to a data recording software enables analysis and the representation of the process in the log p-h diagram. The software also displays the key characteristics variables of the process, such as the compressor pressure ratio and the coefficient of performance.

ET 102
Heat pump

1 expansion valve, 2 evaporator with fan, 3 pressure sensor, 4 pressure switch, 5 displays and controls, 6 compressor, 7 cooling water flow meter, 8 pump, 9 hot water tank, 10 receiver, 11 cocondenser

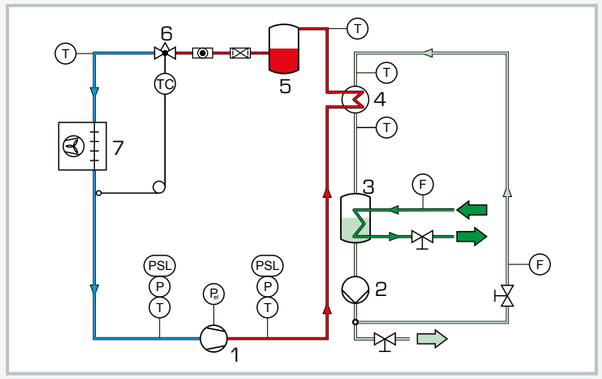

1 compressor, 2 pump, 3 hot water tank with external cooling water connection, 4 condenser, 5 receiver, 6 expansion valve, 7 evaporator with fan;
T temperature, P pressure, F flow rate, P_{el} power, PSH, PSL pressure switch;
blue/red: refrigeration circuit, light green: hot water circuit, green: cooling water

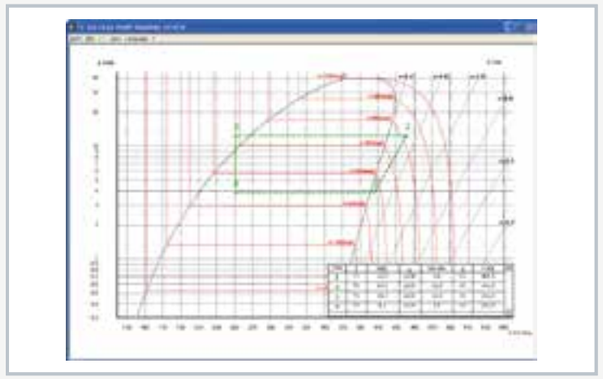

Software screenshot: log p-h diagram

Specification

[1] investigation of a heat pump with a water circuit as load
[2] refrigeration circuit with compressor, evaporator with fan, thermostatic expansion valve and coaxial coil heat exchanger as condenser
[3] hot water circuit with pump, tank and condenser as heater
[4] additional cooling via pipe coil in the hot water tank and external cooling water
[5] record and display of all relevant measured values and
[6] GUNT software for data acquisition via USB under Windows 7, 8.1, 10

Technical data

Compressor
- capacity: 372W at 7,2/32°C

Coaxial coil heat exchanger (condenser)
- refrigerant content: 0,55L
- water content: 0,3L

Finned tube evaporator
- transfer area: approx. 0,175m^2

Pump
- max. flow rate: 1,9m^3/h
- max. head: 1,4m

Hot water tank volume: approx. 4,5L

Measuring ranges
- pressure: 2x -1...15bar
- temperature: 4x 0...100°C, 2x -100...100°C
- power: 1x 0...6000W
- flow rate (water): 1x 0...108L/h
- flow rate (cooling water): 1x 10...160L/h

230V, 50Hz, 1 phase
230V, 60Hz, 1 phase
120V, 60Hz, 1 phase
LxWxH: 1620x790x1910mm
Weight: approx. 192kg

Required for operation

water connection, drain
PC with Windows recommended

Scope of delivery

1 trainer
1 GUNT software CD + USB cable
1 set of instructional material

ET 915 HSI training system refrigeration and air conditioning technology

The ET 915 HSI Training system refrigeration and air conditioning technology, base unit provides basic experiments for the different areas of refrigeration and air conditioning technology.

The term HSI refers to our overall didactic concept: **H**ardware – **S**oftware – **I**ntegrated.

Refrigeration

ET 915.01
Refrigerator model

ET 915.02
Model of a refrigeration system with refrigeration and freezing stage

Air conditioning

ET 915.06
Model of a simple air conditioning system

ET 915.07
Air conditioning model

All attachments contain expansion elements and evaporators

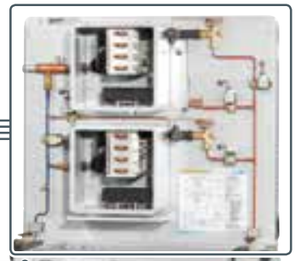

The ET 915 base unit contains the main compressor and condenser components

Modular system with extensive teaching possibilities

Training software

...with didactically valuable course of studies

- use the training software on the students' own PCs
- complete course of studies for refrigeration and air-conditioning technology including quiz
- very flexible thanks to the structure of own learning modules and tests
- intuitive user interface

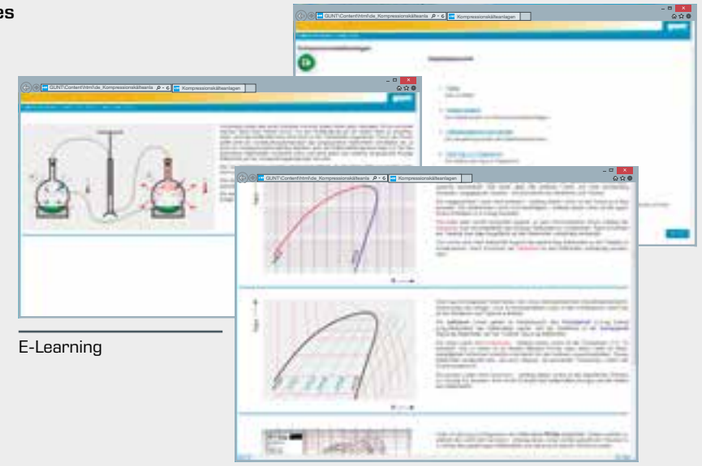

E-Learning

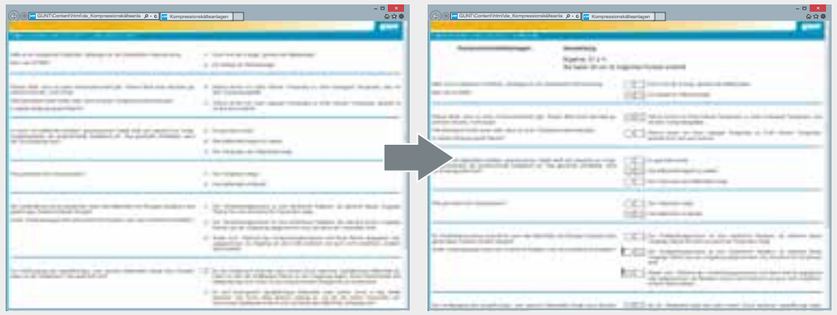

Quiz with detailed evaluation

Targeted review of the learning content

- learning progress can be monitored discretely and automatically
- detect weaknesses and provide targeted support

Data acquisition

...with unlimited networking capability

- interactive experiments for students via network connection
- real-time display of the processes in the log p-h diagram and h-x diagram
- plug & play system via USB connection

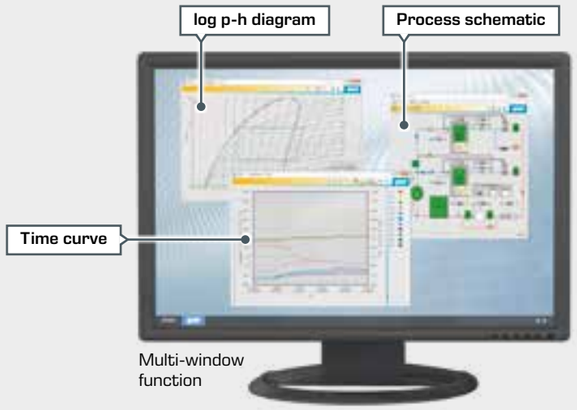

Multi-window function

ET 915

HSI training system refrigeration and air conditioning technology, base unit

Description

- **base unit for the setup of basic experiments in refrigeration and air conditioning technology**
- **modern learning environment through hardware/software integration (HSI)**
- **four models on refrigeration and air conditioning technology**

The base unit ET 915 is, dependent on the objective of the experiment, extended into complete refrigeration circuit with one of the models available as accessories (ET 915.01 refrigerator, ET 915.02 refrigeration system with refrigeration and freezing stage, ET 915.06 simple air conditioning system, ET 915.07 air conditioning).

The main components of ET 915 are compressor, condenser and receiver plus electrical and communications systems. The models are plugged onto the base unit and connected hydraulically with refrigerant hoses and electrically with cables. Self-sealing couplings reduce the refrigerant loss to a minimum. All components are arranged well visible to allow their operation to be monitored.

The modern and powerful software is an integral part of the training system in the form of hardware/software integration (HSI). It enables the comfortable execution and analysis of the experiments. The experimental unit is connected to the PC via a USB interface.

The GUNT software consists of a software for system operation and for data acquisition and an educational software. With explanatory texts and illustrations the educational software significantly aids the understanding of the theoretical principles. With the aid of an authoring system, the teacher can create further exercises. Each model has its own GUNT software matching the learning objectives.

Temperatures and pressures in the system are recorded by sensors and displayed dynamically in the software for system operation and data acquisition. The effect of parameter changes can be tracked in log p-h and h-x diagrams. The system is also operated via the software.

Learning objectives/experiments

- in conjunction with ET 915.01, ET 915.02, ET 915.06 and ET 915.07
  - fundamentals of the refrigeration cycle
  - fundamentals of air conditioning
  - components in a refrigeration system/air conditioning system
  - system operation
  - fault finding

ET 915

HSI training system refrigeration and air conditioning technology, base unit

1 compressor, 2 condenser with add-on fan, 3 receiver, 4 solenoid valve, 5 frame to mount the models, 6 filter/drier, 7 manometer, 8 pressure switch, 9 refrigerant hose

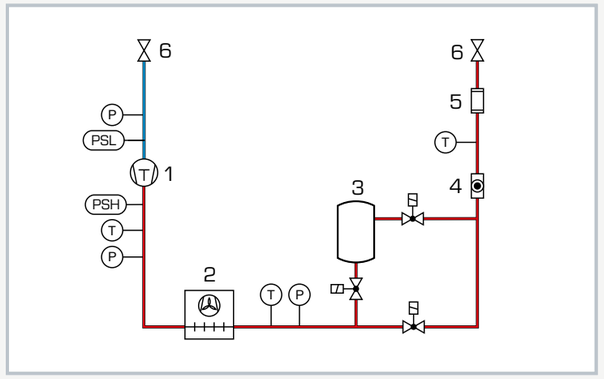

1 compressor, 2 condenser, 3 receiver, 4 sight glass, 5 filter/drier, 6 refrigerant hose for the models;
PSH, PSL pressure switch; T temperature, P pressure;
blue: low pressure, red: high pressure

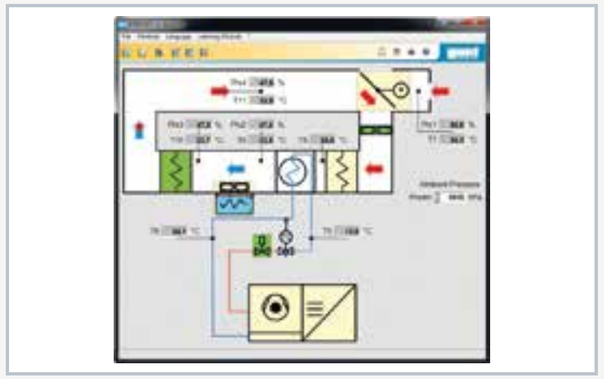

Software screenshot: process schematic of the model ET 915.07. Measured values are displayed „online".

Specification

[1] basic experiments on the operation of refrigeration and air conditioning systems by combining the base unit and models
[2] GUNT training system with HSI technology
[3] condensing unit consisting of compressor, condenser and receiver
[4] connection between condensing unit and model via refrigerant hoses
[5] model attached securely on ET 915 with fasteners
[6] manometer for refrigerant with temperature scale
[7] refrigerant R134a, CFC-free
[8] system control via solenoid valves and software
[9] functions of the GUNT software: educational software, data acquisition, system operation

Technical data

Condensing unit
- refrigeration capacity: 340W at 0/32°C

Measuring ranges
- temperature: 1x -50...50°C, 3x 0...100°C
- pressure
  - 1x intake side: -1...9bar
  - 2x delivery side: -1...15bar

230V, 50Hz, 1 phase
230V, 60Hz, 1 phase
120V, 60Hz, 1 phase
UL/CSA optional
LxWxH: 830x650x320mm
Weight: approx. 60kg

Required for operation

PC with Windows

Scope of delivery

1 condensing unit, filled with refrigerant
1 CD with authoring system for GUNT educational software
1 set of instructional material

ET 915.01
Refrigerator model

Description

- **simple model of a domestic refrigerator for connection to the ET 915**
- **component operation and fault simulation via the GUNT software**

ET 915.01 is part of the HSI training system for refrigeration and air conditioning technology. In combination with the base unit ET 915 the operational model of a domestic refrigerator is created. The model is plugged onto the base unit, secured using fasteners and connected with refrigerant hoses to become a complete refrigeration circuit.

ET 915.01 consists of a refrigeration chamber with a heater as cooling load, evaporator, fan and various expansion elements. The fan supports the achievement of an even temperature distribution in the chamber. A cooling load can additionally be simulated with the heater. Solenoid valves enable the operation of the system with capillary tube or with expansion valve. All components are clearly arranged on a panel.

The operation of individual system components, here the temperature control, fan, heater, compressor and solenoid valves, takes place via the software. The software offers the option to simulate faults.

Temperatures and pressures in the system are recorded by sensors and displayed dynamically in the software. The effect of parameter changes can be tracked online in the log p-h diagram. Fundamentals and individual components are represented in the educational software for ET 915.01. Performance assessments check the learning progress. With the aid of the authoring system further exercises and performance assessments can be created.

Learning objectives/experiments

- understand and get familiar with the design and operation of a simple refrigeration system
- familiarisation with the principle of operation of an evaporator
- different expansion elements
  - operation with capillary tube
  - operation with expansion valve
- operating behaviour under load
- refrigeration cycle in the log p-h diagram
- fault simulation

ET 915.01
Refrigerator model

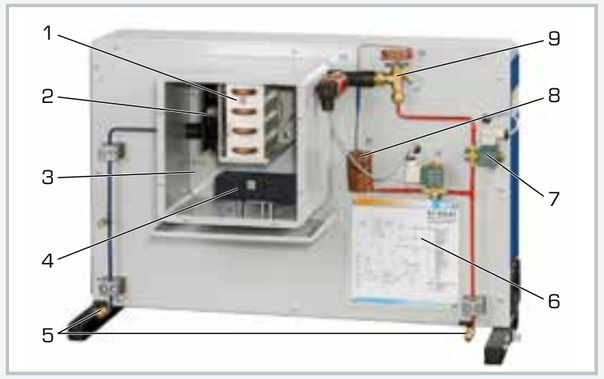

1 evaporator, 2 fan, 3 refrigeration chamber, 4 heater, 5 connections to ET 915, 6 process schematic, 7 solenoid valve, 8 capillary tube, 9 expansion valve

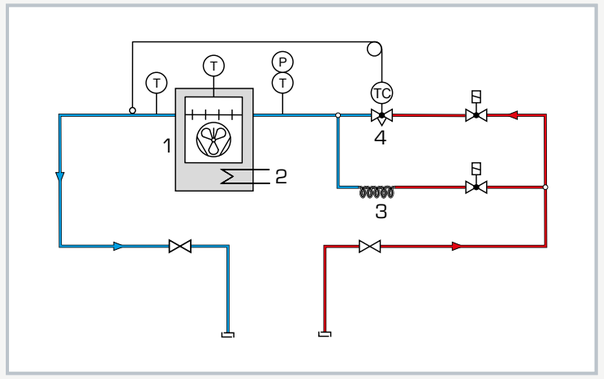

Process schematic of the refrigerator model: 1 evaporator, 2 heater, 3 capillary tube, 4 expansion valve; T temperature, P pressure; blue: low pressure, red: high pressure

Software screenshot: process schematic

Specification

[1] model of a refrigerator to plug onto the base unit ET 915
[2] GUNT training system with HSI technology
[3] refrigeration chamber with evaporator, fan and cooling load
[4] chamber with transparent front
[5] electric heater to generate the cooling load
[6] expansion elements selectable via solenoid valves: expansion valve or capillary tube
[7] sensors to record temperature and pressure
[8] operation of solenoid valves, fan, heater and fault simulation via software
[9] GUNT software for data acquisition via USB under Windows 7, 8.1, 10
[10] GUNT software: educational software, data acquisition, system operation

Technical data

Refrigeration chamber, LxWxH: 270x270x220mm
Electric PTC heater as cooling load: 210W
Capillary tube: length 2m

Measuring ranges
- temperature: 3x -50...50°C
- pressure: -1...9bar

LxWxH: 850x380x550mm
Weight: approx. 30kg

Scope of delivery

1 refrigerator model, filled with refrigerant
1 GUNT software CD + USB cable

ET 915.02
Model of a refrigeration system with refrigeration and freezing stage

The illustration shows a similar unit.

Description

- **series and parallel connection of evaporators**
- **component operation and fault simulation via the GUNT software**

ET 915.02 is part of the HSI training system for refrigeration and air conditioning technology. In combination with the base unit ET 915 the operational model of a refrigeration system with refrigeration and freezing stage results. The model is plugged onto the base unit, secured using fasteners and connected with refrigerant hoses to become a complete refrigeration circuit.

In refrigeration and freezing combinations evaporators are preferably connected in parallel. To increase the refrigeration capacity, evaporators are operated connected in series. Here different pressure levels in the evaporators can be used to obtain different temperature ranges for refrigeration or freezing.

ET 915.02 includes two separate refrigeration chambers with evaporator and expansion elements. The evaporators can be optionally operated connected in series or in parallel. Two fans in the refrigeration chambers support the achievement of an even temperature distribution. With heaters cooling loads can additionally be simulated.

One of the refrigeration chambers can optionally be operated with an expansion valve or a capillary tube as expansion element. The various operation modes are set via solenoid valves. An evaporation pressure controller permits in parallel operation the independent adjustment of the temperature level in the upper chamber. All components are clearly arranged on a panel.

The operation of individual system components, here temperature control, fan, heater, compressor and solenoid valves, takes place via the software.

The software offers the option to simulate faults. Temperatures and pressures in the system are recorded by sensors and displayed dynamically in the software. The effect of parameter changes can be tracked online in the log p-h diagram.

Fundamentals and individual components are represented in the educational software for ET 915.02. Performance assessments check the learning progress. With the aid of the authoring system further exercises and performance assessments can be created.

Learning objectives/experiments

- design and operation of a refrigeration system with two evaporators
- series and parallel connection of two evaporators
- familiarisation with the different expansion elements
  - ▸ operation with capillary tube
  - ▸ operation with expansion valve
- operating behaviour under load
- refrigeration cycle in the log p-h diagram
- effect of the evaporation pressure
- fault simulation

ET 915.02
Model of a refrigeration system with refrigeration and freezing stage

1 evaporation pressure controller, 2 evaporator, 3 fan, 4 heater, 5 connections to ET 915, 6 process schematic, 7 capillary tube, 8 solenoid valve, 9 expansion valve

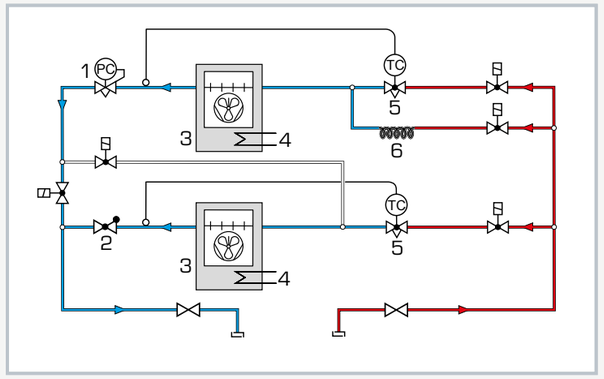

Refrigeration system model, evaporators connected in parallel:
1 evaporation pressure controller, 2 non-return valve, 3 evaporator, 4 heater, 5 expansion valve, 6 capillary tube; T temperature, P pressure; blue: low pressure, red: high pressure

Software screenshot: process schematic

Specification

[1] model of a refrigeration system to plug onto the base unit ET 915
[2] GUNT training system with HSI technology
[3] each refrigeration chamber includes: evaporator with fan (to recirculate the air) and heater to generate the cooling load
[4] refrigeration chambers with transparent front
[5] adjustable evaporation pressure controller
[6] selectable expansion elements: expansion valve or capillary tube
[7] operating modes of the system configurable via 5 solenoid valves
[8] sensors to record temperature and pressure
[9] operation of solenoid valves, fan, heater and fault simulation via software
[10] GUNT software with control functions and data acquisition via USB under Windows 7, 8.1, 10
[11] GUNT software: educational software, data acquisition, system operation

Technical data

Refrigeration chamber: LxWxH: 270x270x220mm
Electric PTC heater as cooling load: 210W
Capillary tube: length 2m
Evaporation pressure controller: 0...5,5bar

Measuring ranges
- temperature: 6x ±50°C
- pressure: 2x -1...9bar

LxWxH: 850x380x750mm
Weight: approx. 45kg

Scope of delivery

1 refrigeration system model, filled with refrigerant
1 GUNT software CD + USB cable

5

Thermodynamic applications in supply engineering: HVAC

Introduction

Overview Thermodynamic applications in supply engineering: HVAC 234

Hot water generation

Basic knowledge Hot water central heating systems 236

HL 352 Test stand for oil, natural gas and propane gas burners 238

HL 352.01 Oil burner 240

HL 352.02 Natural gas burner 241

HL 352.03 Propane gas burner 242

Basic knowledge Solar thermal energy 244

Overview ET 202 Principles of solar thermal energy 246

ET 202 Principles of solar thermal energy 248

HL 313 Domestic water heating with flat collector 250

Basic knowledge Shallow geothermal energy 252

ET 262 Geothermal probe with heat pipe principle 254

ET 264 Geothermal energy with two-well system 256

Basic knowledge Heat pump 258

ET 102 Heat pump 260

ET 405 Heat pump for cooling and heating operation 262

Overview ET 420 Ice stores in refrigeration 264

ET 420 Ice stores in refrigeration 268

Air conditioning technology and ventilation

Basic knowledge Ventilation systems and their components 270

HL 720 Ventilation system 272

Basic knowledge Fundamentals of air conditioning 274

Basic knowledge Setup of an air conditioning system 276

Overview ET 620 Air conditioning and ventilation system 278

ET 620 Air conditioning and ventilation system 280

Overview ET 915 HSI training system refrigeration and air conditioning technology 282

ET 915.06 Model of a simple air conditioning system 284

ET 915.07 Air conditioning model 286

Overview ET 605 Air conditioning system model plus automation solutions 288

ET 605 Air conditioning system model 290

GUNT-RHLine Renewable Heat

Overview GUNT-RHLine Renewable Heat Solar thermal energy and heat pump modular system 292

HL 320.01 Heat pump 304

HL 320.02 Conventional heating 306

HL 320.03 Flat collector 308

HL 320.04 Evacuated tube collector 310

HL 320.05 Central storage module with controller 312

HL 320.07 Underfloor heating/geothermal energy absorber 314

HL 320.08 Fan heater/air heat exchanger 316

Thermodynamic applications in supply engineering: HVAC

Energy efficiency in building services engineering

A large proportion of the energy used worldwide concerns the supply of buildings. Efficiency improvements can make a significant contribution to reducing the primary energy demand. Measures that result in a building using energy more efficiently involve nearly all areas of modern building services engineering. In addition to consumption by electronic equipment, lighting and water heating, these include in particular the consumption by heating, ventilation and air conditioning. Depending on the geographic location, the design of systems in building services engineering focuses on either heating or cooling requirements, always taking both aspects into account. The diagram opposite shows, using Germany as an example, that a large proportion of energy is used for heating rooms.

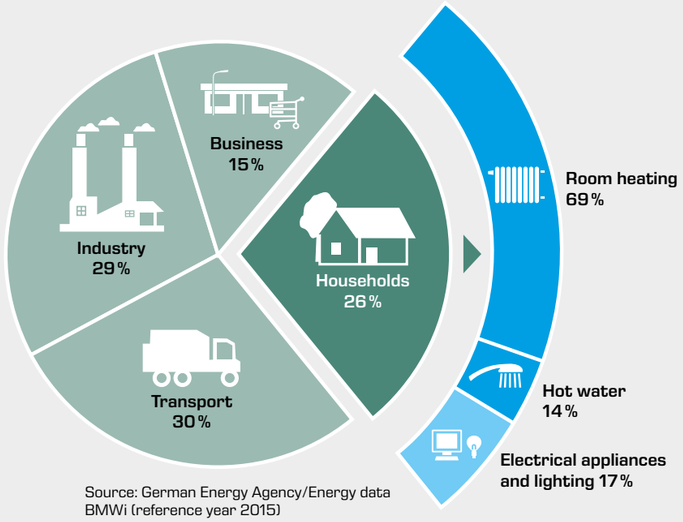

Source: German Energy Agency/Energy data BMWi (reference year 2015)

Components for the combined use of renewable heat sources in the domestic supply

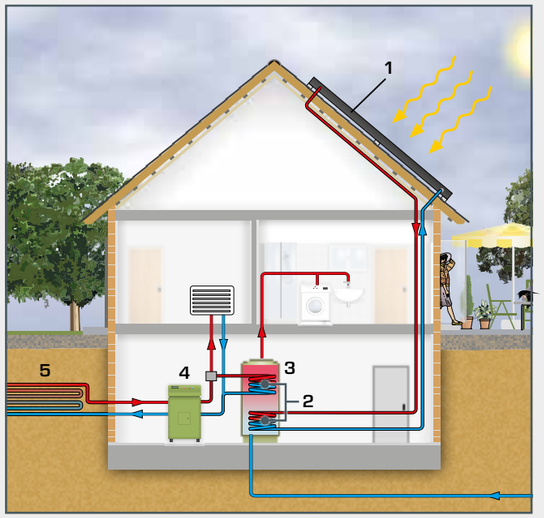

Components for the combined use of renewable heat sources in the domestic supply

1 flat collector, **2** heat exchanger, **3** hot water storage tank, **4** heat pump, **5** geothermal absorber;
hot heat transfer fluid,
cold heat transfer fluid

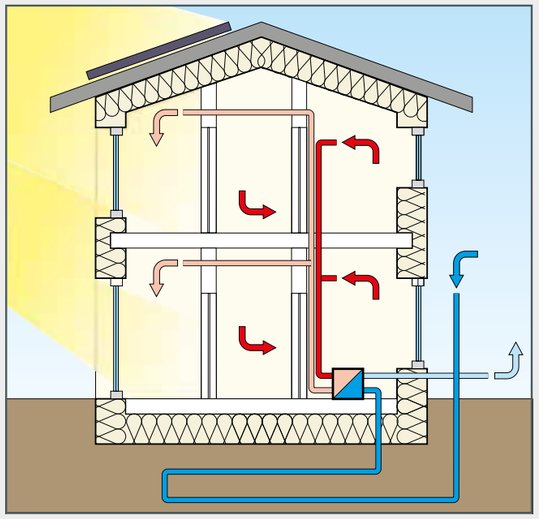

Ventilation with heat recovery

- **outside air:** air drawn in from the environment,
- **outgoing air:** air released into the environment,
- **supply air:** air entering a room or facility after it has been treated, e.g. by filtering or heating
- **exhaust air:** air leaving a room

Structural and technical techniques for resource conservation

Structural and technical measures are needed in order to reduce the primary energy demand of buildings. Heat insulation in cold regions and the use of transparent façades, for example, are some of the possible structural measures. In warm regions, attention is paid to shading and insulation from heat radiation. This area is becoming increasingly important in the training of architects, urban planners and construction engineers.

Efficient components and systems, controlled by means of modern building services engineering, are at the forefront of technical measures for optimisation of the energy supply. Taking into account modern concepts for combined heat and power, distributed power grids and energy storage, it is possible to achieve energy production and distribution that is adapted to demand.

Standards for energy efficiency in building services engineering

Directives have been passed by the European Parliament on energy efficiency in buildings. Below is an excerpt from Directive 2010/31/EU of the European Parliament and of the Council of 19 May 2010 on the energy performance of buildings:

> [...] (3) Buildings account for 40 % of total energy consumption in the Union. The sector is expanding, which is bound to increase its energy consumption. Therefore, reduction of energy consumption and the use of energy from renewable sources in the buildings sector constitute important measures needed to reduce the Union's energy dependency and greenhouse gas emissions. Together with an increased use of energy from renewable sources, measures taken to reduce energy consumption in the Union would allow the Union to comply with the Kyoto Protocol to the United Nations Framework Convention on Climate Change (UNFCCC). [...]

To implement the EU Directive in Germany, the energy efficiency of buildings is categorised in the energy efficiency classes A to G in an energy certificate in accordance with the German Energy Efficiency Act. Buildings are classified according to the specific primary and final energy demand. For highly efficient passive houses, the annual energy demand is well below 50 kWh/m^2.

Basic knowledge

Hot water central heating systems

A hot water central heating system has four partial tasks:

- central generation of hot water
- transporting hot water
- heat transfer to rooms
- controlling and regulating temperature

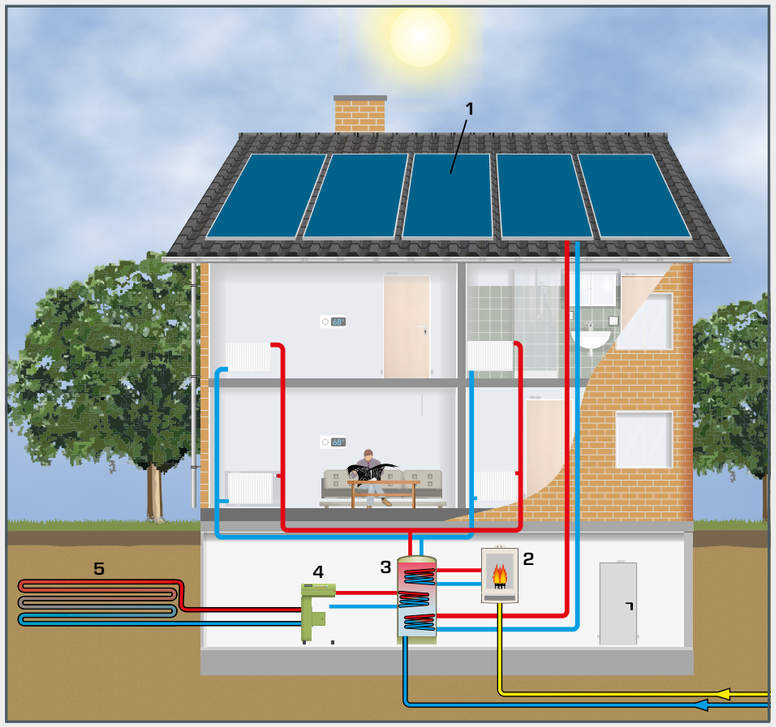

1 flat collector, **2** heating boiler, **3** hot water storage tank, **4** heat pump, **5** geothermal absorber;
hot heat transfer fluid, cold heat transfer fluid, fuel supply

Suitable control technology ensures a uniformly comfortable room climate all year round.

Modern systems allow the heating system to be controlled remotely.

There are different ways of transferring the heat to the rooms, depending on the requirements and size of the room.

The design of piping systems for the transport of hot water requires knowledge of fluid mechanics, for example the characteristic variables of pumps and friction or pressure losses in pipe elements. GUNT's **product area 4 Fluid mechanics** deals with these aspects.

Generation of hot water

Oil, gas or wood-fired boiler

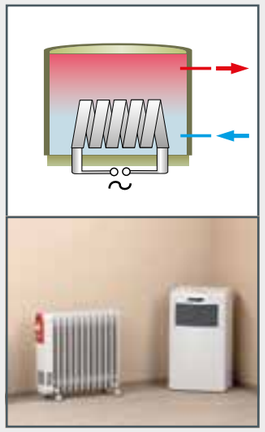

Electric resistance heating

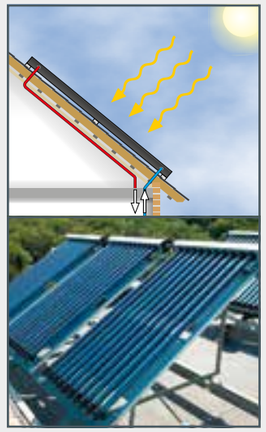

Solar thermal energy

Heat pump

Hot water

Water as a heat transfer medium

Advantages

- high heat capacity
- inexpensive and easily obtainable
- non-toxic and environmentally friendly

Disadvantages

- temperature range only 0 ... 100°C at ambient pressure
- corrosive in the presence of oxygen

Cold water

Heat transfer to rooms

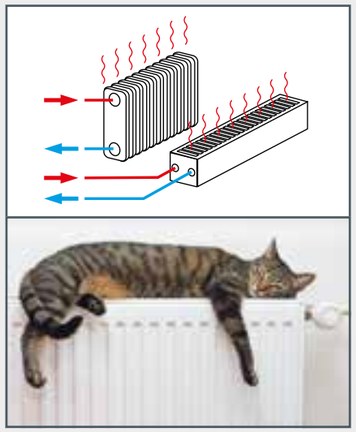

Radiator with natural convection

Underfloor or wall heating with natural convection

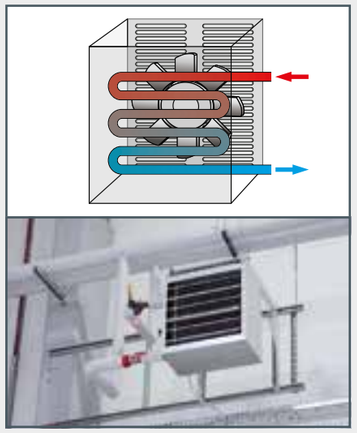

Air heater with forced convection

HL 352
Test stand for oil, natural gas and propane gas burners

The illustration shows the trainer together with the HL 352.01 oil burner accessory

Learning objectives/experiments

- design and operating behaviour of a heating boiler
- comparison of burners (3 different burners available as accessories)
- changes in settings during operation with observation of the effects on the flame pattern
- temperature measurements in different areas of the combustion chamber
- oil pressure measurements on the burner with observation of the effect on the flame pattern
- thermal balance
- calculation of the thermal output of a heating boiler
- function of a plate heat exchanger

Description

- **investigation of gas and oil burners**
- **viewing window for observing the flame pattern**

Gas and oil burners can be used to generate heat for central hot water heating systems. Burners convert the chemically stored energy of the fuels into thermal energy. There are diferent types of burners that differ mainly in their design. Oil burners are distinguished as yellow flame or atomizing burners and blue flame burners. Gas burners can be built in the form of gas fan burners, which are optimised for different gases depending on the heating medium.

The HL 352 test stand can be used to study gas and oil burners and compare their thermal balance. The test stand consists of a heating boiler, a heating control unit and a domestic water heater.

The accessories HL 352.01 oil burner, HL 352.02 natural gas burner and HL 352.03 propane gas burner are available. The flue gas can be analysed with the HL 860 Exhaust gas analyser. The test stand is supplied with a fuel oil tank.

A viewing window is installed in the boiler body, which allows the flame to be observed and the settings on the burner to be immediately assessed.

The test stand is equipped with the prescribed safety devices. A heatable domestic water tank serves as a second heat consumer.

In addition to oil pressure and flow rate, all relevant temperatures, water flow rates and the combustion chamber temperature are measured. A thermal balance can be created from the measurement data and the energy efficiency can be determined.

An integrated heating circuit with plate heat exchanger simulates a heater circuit. The measured values are transmitted directly to a PC via USB where they can be analysed using the software included.

HL 352
Test stand for oil, natural gas and propane gas burners

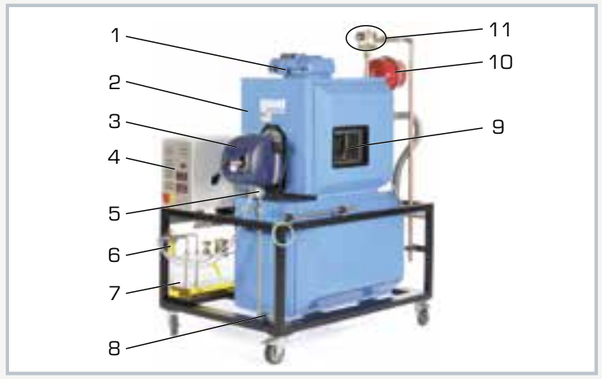

1 heating control unit, 2 heating boiler, 3 HL 352.01 Oil burner (not included), 4 switch cabinet with digital displays and control panel, 5 gas pressure manometer, 6 two-strand oil filter, 7 fuel oil tank with fittings, 8 gas connection, 9 viewing window in the heating controller, 10 expansion tank, 11 boiler safety group

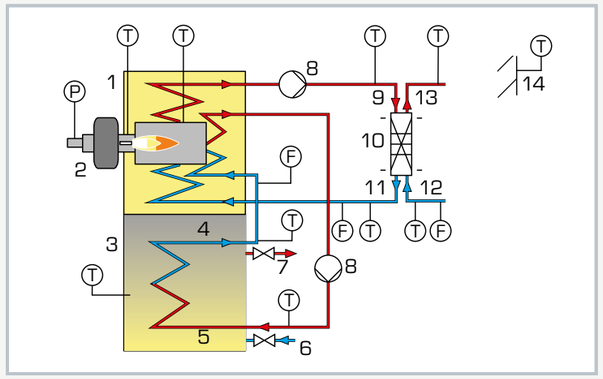

Process schematic: 1 heating boiler, 2 burner, 3 domestic water heater, 4 domestic water heater return, 5 domestic water heater feed, 6 cold water connection, 7 hot water drain, 8 circulation pump, 9 heating circuit feed, 10 plate heat exchanger, 11 heating circuit return, 12 cooling water connection, 13 cooling water drain, 14 external temperature sensor

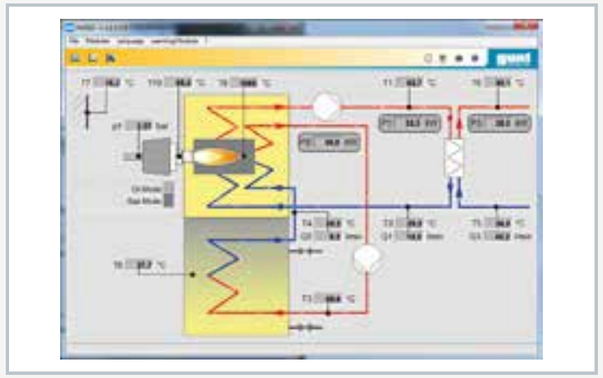

Software screenshot

Specification

[1] comparison of burners
[2] oil burner, natural gas burner and propane gas burner available as accessories
[3] function of a heating boiler
[4] boiler body with 1 viewing window made of special glass
[5] domestic water heater with circulation pump
[6] transparent heating oil tank with filling and venting valve
[7] digital displays for oil pressure sensor, temperature and flow rate sensor
[8] GUNT software for data acquisition via USB under Windows 7, 8.1, 10

Technical data

Boiler
- nominal power output: 18kW
- control unit with temperature limiter

Circulation pump
- max. power consumption: 70W
- max. flow rate: 45L/min
- max. head: 4m

Plate heat exchanger: 10 plates

Boiler safety group according to DIN 4751
- 3bar
- 50kW

Domestic water heater: 160L
Heating oil tank, transparent: 15L

Measuring ranges
- oil pressure: 0...16bar
- gas pressure (nozzle): 0...10mbar
- temperature: 1x 0...1.500°C / 9x 0...100°C
- flow rate (water): 3...60L/min
- flow rate (oil): 0...40L/min

230V, 50Hz, 1 phase
230V, 60Hz, 1 phase; 120V, 60Hz, 1 phase
UL/CSA optional
LxWxH: 1000x1440x1920mm
Weight: approx. 377kg

Required for operation

water connection, drain, ventilation, exhaust gas routing, PC with Windows

Scope of delivery

1 trainer without burner
1 GUNT software CD + USB cable
1 set of instructional material

HL 352.01
Oil burner

The illustration shows a similar unit.

Learning objectives/experiments

- investigation of an oil burner
- thermodynamic balance

Specification

[1] oil burner for installation in the HL 352 test stand
[2] fuel supplied via the HL 352 test stand
[3] sensor and digital displays for initial oil pressure, temperatures and flow rate on the HL 352 test stand

Technical data

Oil burner
- max. output: 18kW

LxWxH: 800x400x400mm
Weight: approx. 11kg

Required for operation

fuel oil

Scope of delivery

1 experimental unit
1 manual

Description

- **oil burner for installation in the HL 352 test stand**
- **blue flame burner**

Oil burners are divided into yellow flame and blue flame burners, depending on the flame colour. In the case of yellow flame burners, the heating oil is only atomized before combustion; in the case of blue flame burners, the heating oil is evaporated and some of the hot exhaust gases are returned to the root of the burner flame. In blue flame burners, combustion takes place in a gaseous state, which produces the blue flame. This results in cleaner combustion with a lower nitrogen oxide content and very low carbon monoxide content in the exhaust gas.

The HL 352.01 Oil burner is a commercially available blue flame burner in the power range that is commonly used for residential buildings.

The HL 352 test stand can be used to measure important temperatures and pressures, which are then available for further calculations. A thermal balance can be created from the measurement data and the energy efficiency can be determined.

HL 352.02
Natural gas burner

The illustration shows a similar unit.

Learning objectives/experiments

- investigation of a natural gas burner
- thermodynamic balance

Specification

[1] natural gas burner for installation in the HL 352 test stand
[2] hoses with connections and gas pressure controller for the fuel supply
[3] sensor and digital displays for gas pressure, temperatures and flow rate on the HL 352 test stand

Technical data

Natural gas burner
- max. output: 15kW

LxWxH: 800x400x400mm
Weight: approx. 11kg

Required for operation

natural gas connection

Scope of delivery

1 experimental unit
1 manual

Description

- **natural gas burner for installation in the HL 352 test stand**
- **gas fan burner**

In a gas fan burner, the ratio of combustion air to gas quantity can be precisely dosed. The combustion air is supplied via a fan, which means that the combustion process is less dependent on ambient conditions such as the draught of the chimney. Due to the precise dosing, the burner can be operated with a small surplus of air and thus achieves a good firing efficiency.

Gas fan burners can be used for H/L natural gas or biogas or liquefied petroleum gas. They differ in their gas connection with the gas hoses, burner settings and pressure controller.

HL 352.02 is configured to use natural gas by default.

The HL 352.02 Natural gas burner is a commercially available gas fan burner in the power range that is commonly used for residential buildings.

The HL 352 test stand can be used to measure important temperatures and pressures, which are then available for further calculations. A thermal balance can be created from the measurement data and the energy efficiency can be determined.

HL 352.03
Propane gas burner

The illustration shows a similar unit.

Description

- **propane gas burner for installation in the HL 352 test stand**
- **gas fan burner**

In a gas fan burner, the ratio of combustion air to gas quantity can be precisely dosed. The combustion air is supplied via a fan, which means that the combustion process is less dependent on ambient conditions such as the draught of the chimney. Due to the precise dosing, the burner can be operated with a small surplus of air and thus achieves a good firing efficiency.

Gas fan burners can be used for H/L natural gas or biogas or liquefied petroleum gas. They differ in their gas connection with the gas hoses, burner settings and pressure controller.

HL 352.03 is configured to use liquefied petroleum gas, in this case propane gas, by default.

The HL 352.03 Propane gas burner is a commercially available gas fan burner in the power range that is commonly used for residential buildings.

The HL 352 test stand can be used to measure important temperatures and pressures, which are then available for further calculations. A thermal balance can be created from the measurement data and the energy efficiency can be determined.

Learning objectives/experiments

- investigation of a propane gas burner
- thermodynamic balance

Specification

[1] propane gas burner for installation in the HL 352 test stand
[2] hoses with connections and gas pressure controller for the fuel supply
[3] sensor and digital displays for gas pressure, temperatures and flow rate on the HL 352 test stand

Technical data

Propane gas burner
- max. output: 18kW

LxWxH: 800x400x400mm
Weight: approx. 11kg

Required for operation

propane gas connection

Scope of delivery

1 experimental unit
1 manual

Basic knowledge

Solar thermal energy

Solar thermal energy is defined as using solar power to provide heat. The heat can be used for heating in the home and for heating domestic water, as well as for process heat in industry and for steam generation in power stations and even for cooling.

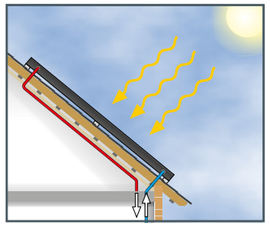

Typical applications for solar thermal collectors:

- heating water in swimming pools
- low-temperature heat for heating rooms
- domestic water heating
- process heat (concentrated solar power)
- electricity generation (concentrated solar power)

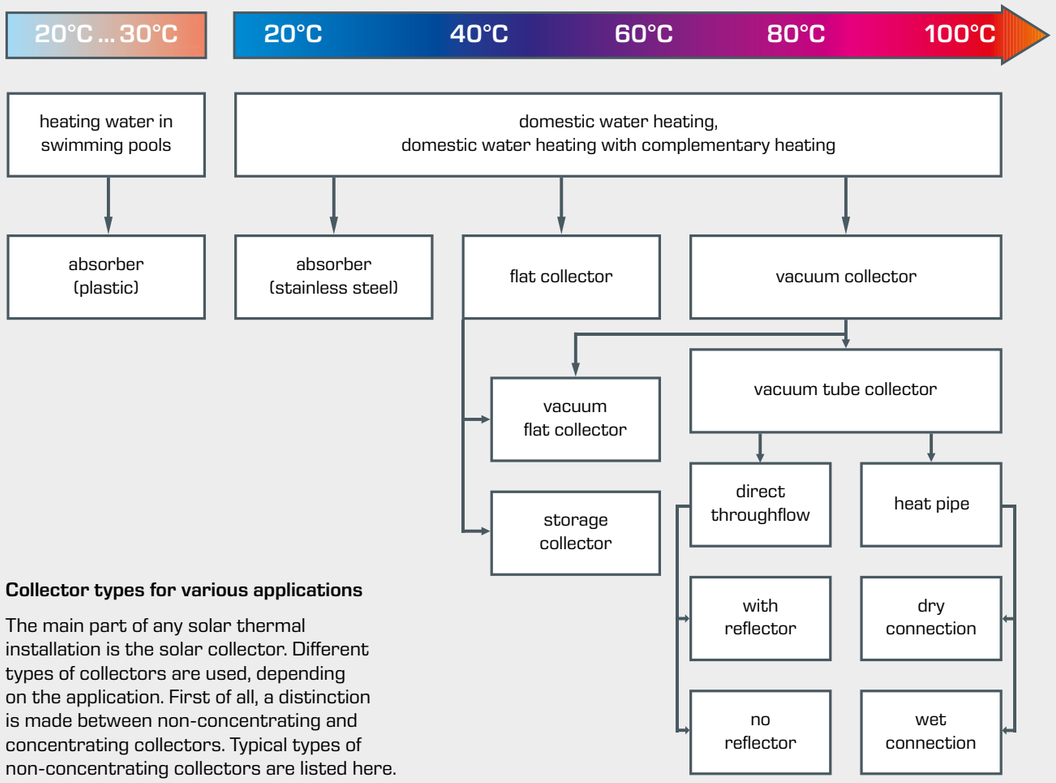

Collector types for various applications

The main part of any solar thermal installation is the solar collector. Different types of collectors are used, depending on the application. First of all, a distinction is made between non-concentrating and concentrating collectors. Typical types of non-concentrating collectors are listed here.

Flat collector

A widely-used type of collector is the flat collector. It represents a balanced compromise between a simple, cost-effective design and efficiency. The back is insulated against heat loss. The copper tube can be fed through the collector in different ways. The construction will seek a compromise between good convective heat transfer through to turbulent flow and low pressure loss. The absorber may be made of copper, aluminium or steel.

The absorber's dark colour is caused by the selective coating. The glass cover is made of high-quality, low-iron solar glass with a low absorption factor.

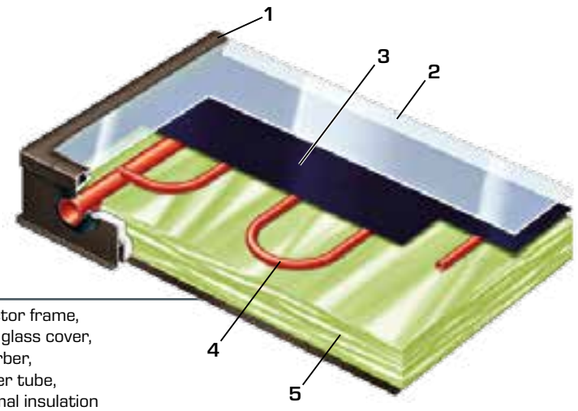

1 collector frame,
2 solar glass cover,
3 absorber,
4 copper tube,
5 thermal insulation

Energy balance of a flat collector

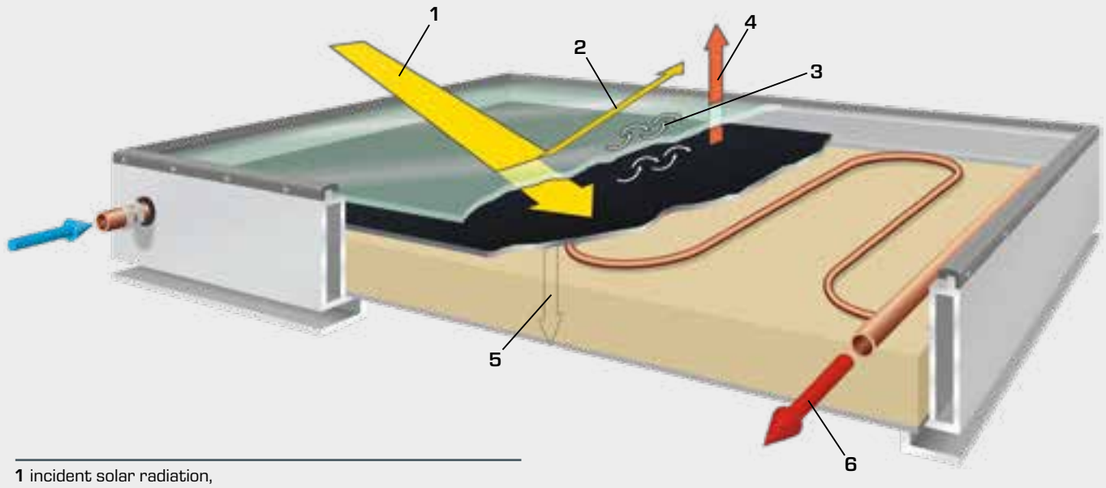

1 incident solar radiation,
2 losses through reflection,
3 losses through convection,
4 thermal radiation losses,
5 losses through heat conduction,
6 generated heat at the collector outlet

Minimising losses

One of the main objectives for modern collectors is to minimise losses. The proportions of the major loss types in thermal solar energy utilisation with flat collectors are shown diagramally in the figure above.

ET 202
Principles of solar thermal energy

ET 202 is a device from the solar thermal energy training area and enables systematic experiments to be carried out on a solar thermal system with a flat collector.

This trainer may be used to study the key factors that affect solar thermal domestic water heating. As such, ET 202 includes a fully functional model of a solar thermal system. In order to facilitate laboratory experiments that do not rely on weather conditions, the trainer is fitted with its own lighting unit. This lighting unit simulates natural solar radiation. The light is converted into heat in an absorber and transferred to a heat transfer fluid. A pump conveys the heat transfer fluid through a hot water storage tank. There the heat is released to the contents of the tank by an integrated heat exchanger.

The flat collector offers a removable glass cover and a removable absorber for studying losses in the system.

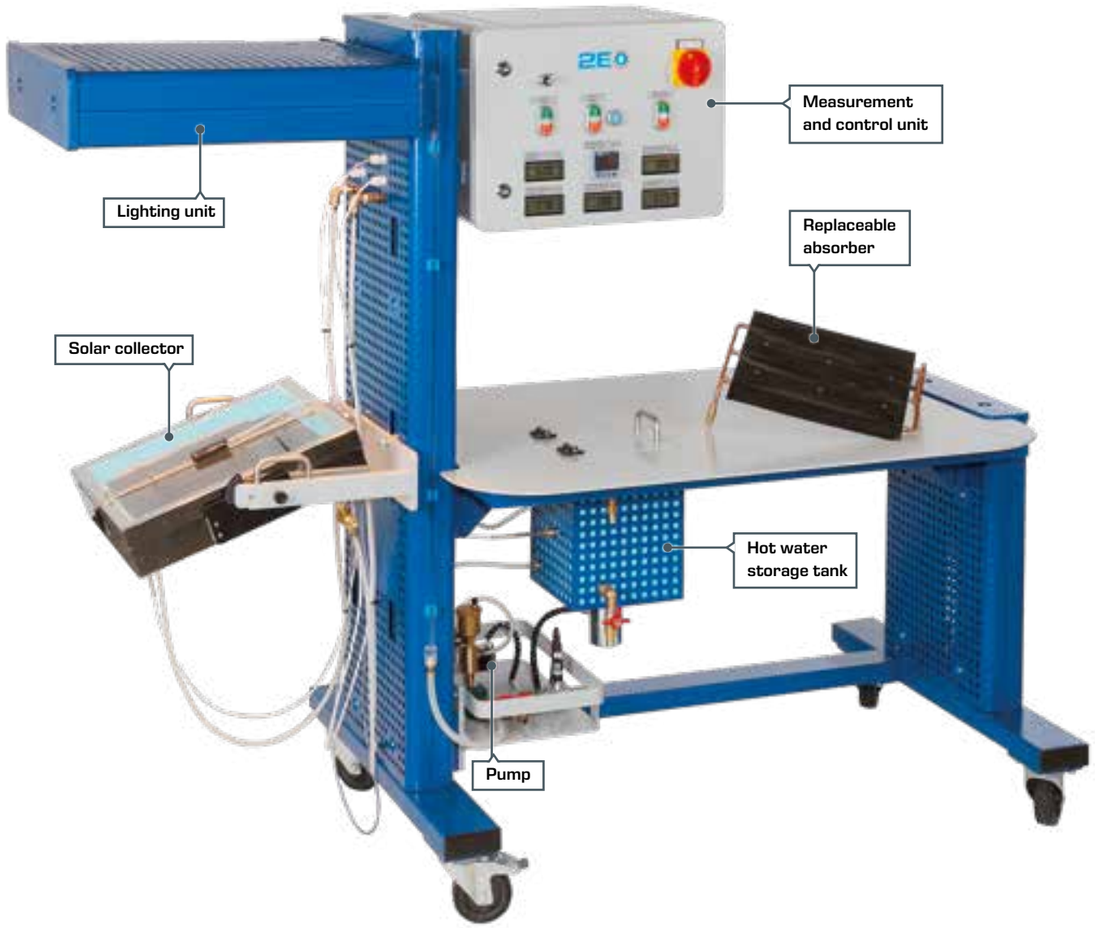

GUNT software for data acquisition

The ET 202 software displays the current values in a system diagram, and facilitates the recording of individual data points or plotting a graph of progression over time.

Digital readouts on the device also allow the device to be used without a PC.

- design and operation of a simple solar thermal system
- determining the net power
- energy balance on the solar collector
- influence of illuminance, angle of incidence and flow rate
- efficiency as a function of the temperature difference
- influence of various absorbing surfaces

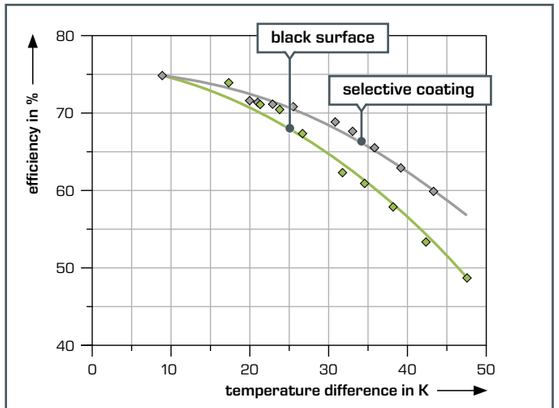

The illustration shows measured values for the efficiency as a function of the collector temperature. A special coating on the absorber allows higher efficiencies.

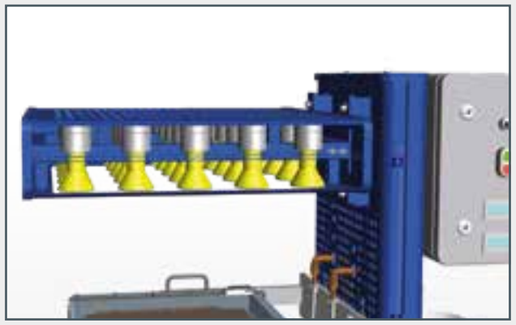

The lighting unit ensures uniform illumination. The spectral composition of the light is similar to that of natural solar radiation.

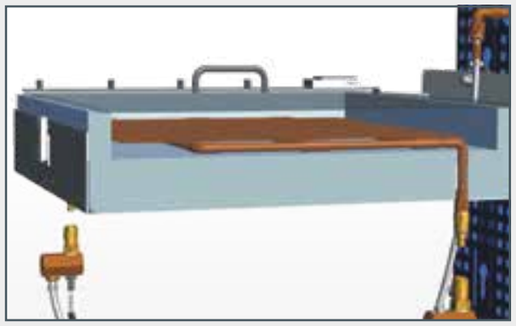

The solar collector converts the absorbed radiation into usable heat. Parts of the insulation and the absorber can easily be removed.

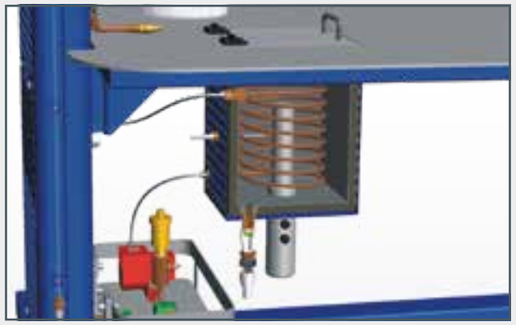

The heat exchanger is built into the hot water storage tank. An electrical heater which makes it possible to achieve different collector operating states in just a short time is additionally available.

ET 202
Principles of solar thermal energy

Description

- **demonstration model of a solar thermal system**
- **lighting unit for operation in the laboratory**
- **hot water storage tank with electrical auxiliary heater**
- **inclinable flat collector with replaceable absorbers**

Solar thermal systems convert solar energy into usable thermal energy. ET 202 allows you to demonstrate solar thermal heating of domestic water in an illustrative manner.

A lighting unit simulates natural solar radiation and allows a range of experiments to be carried out in the laboratory. The light is converted into heat in an absorber and transferred to a heat transfer fluid. A pump conveys the heat transfer fluid through a hot water storage tank. The heat is released to the water by an integrated heat exchanger in the tank.

ET 202 can be used to study a variety of angles of incidence and different illuminance. The pre-installed absorber with selective coating can be replaced for a more simple blackened absorber, so as to obtain comparative measurements of collector losses. External heat consumers can be attached to the tank via two connectors.

The trainer is fitted with sensors to detect the relevant temperatures (collector inlet, collector outlet, ambient air and tank) and the illuminance.

The measured values are displayed on the device and can simultaneously be transferred to a PC via USB. Using the PC, the data can be clearly displayed in the software provided and analysed further.

Learning objectives/experiments

- design and operation of a simple solar thermal system
- determining the net power
- energy balance on the solar collector
- influence of illuminance, angle of incidence and flow rate
- determining efficiency curves
- influence of various absorbing surfaces

ET 202
Principles of solar thermal energy

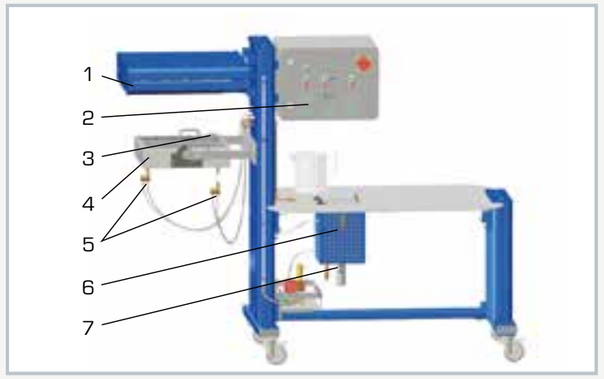

1 lighting unit, 2 control cabinet, 3 illuminance sensor, 4 flat collector with spacing and tilt adjustment, 5 temperature sensor, 6 hot water storage tank, 7 electrical auxiliary heater

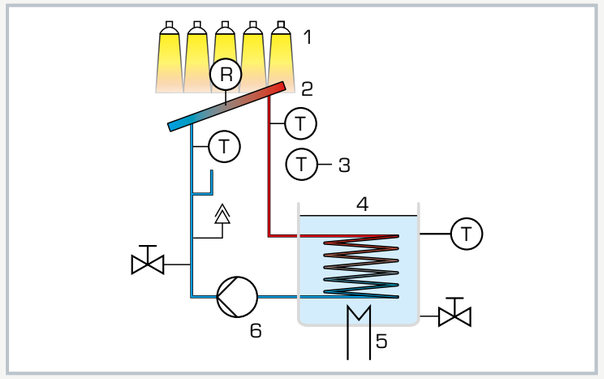

Main components: 1 lighting unit, 2 flat collector, 3 temperature sensor ambient air, 4 hot water storage tank, 5 electrical auxiliary heater, 6 pump;
R illuminance, T temperature

Specification

[1] functional demonstration model of a solar thermal system
[2] lighting unit with 25 halogen bulbs
[3] spacing and tilt adjustable collector
[4] 2 replaceable absorbers with different coating
[5] solar circuit with pump and variable flow
[6] hot water storage tank with tube coil as heat exchanger and electrical auxiliary heater
[7] sensors detect temperature and illuminance
[8] GUNT software for data acquisition via USB under Windows 7, 8.1, 10

Technical data

Flat collector
- absorbing surface: 320x330mm
- tilt angle: 0...60°

Lighting unit
- lamp field: 25x 50W

Pump
- adjustable flow: 0...24L/h

Measuring ranges
- temperature: 4x 0...100°C
- flow rate: 0...30L/h
- illuminance: 0...3kW/m^2

230V, 50Hz, 1 phase
230V, 60Hz, 1 phase
230V, 60Hz, 3 phases
UL/CSA optional
LxWxH: 1840x800x1500mm
Weight: approx. 167kg

Required for operation

PC with Windows recommended

Scope of delivery

1 trainer
1 measuring beaker
1 absorber
1 CD with GUNT software + USB cable
1 set of instructional material

HL 313
Domestic water heating with flat collector

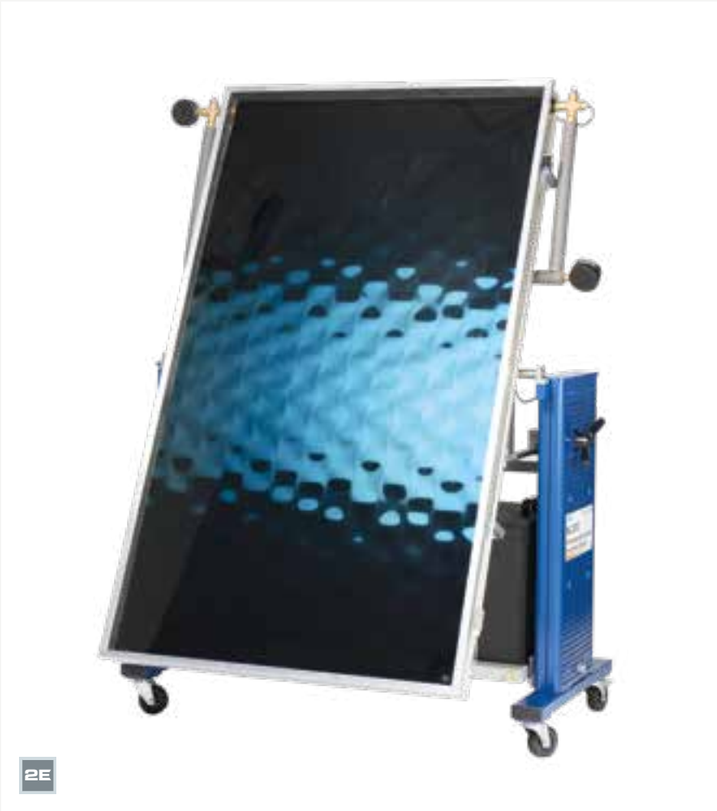

Learning objectives/experiments

- familiarisation with the functions of the flat collector and the solar circuit
- determining the net power
- relationship between flow and net power
- determining the collector efficiency
- relationship between temperature difference (collector/environment) and collector efficiency

Description

- **conversion of solar energy into heat**
- **trainer with real-world components**
- **pivotable flat collector**
- **system with heat exchanger and two separate circuits**
- **solar controller with data logger and USB interface**

The HL 313 trainer can be used to demonstrate the principal aspects of solar thermal domestic water heating in a system with components used in real world applications.

Radiant energy is converted into heat in a commercially available flat collector and transferred to a heat transfer fluid in the solar circuit. The heat then gets into the hot water circuit via a heat exchanger.

A solar controller controls the pumps for the hot water and solar circuits. The solar circuit is protected by an expansion tank and a safety valve.

The trainer has been designed so that it is possible to carry out a complete preheating as part of a practical experiment.

The temperatures in the storage tank, at the outlet from and the inlet to the collector are measured, as is the flow in the solar circuit. Additionally, as in practice, the temperatures of the inlet and return are displayed on the solar circulation station.

In order to ensure there is sufficient illuminance, the system should be operated with solar radiation or the optionally available HL 313.01 Artificial light source.

HL 313
Domestic water heating with flat collector

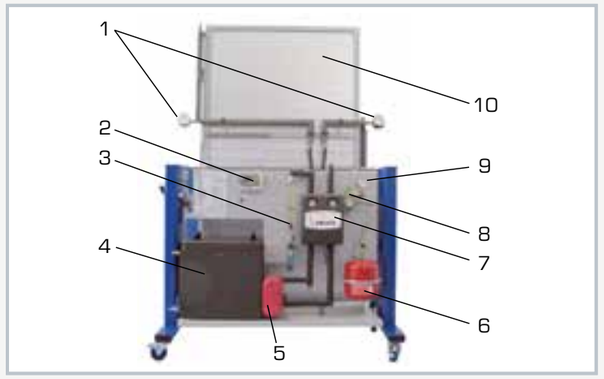

1 inlet and return thermometer, 2 solar controller, 3 flow meter, 4 buffer tank, 5 heat exchanger, 6 expansion vessel, 7 solar circuit pump, 8 pressure relief valve, 9 ambient air thermometer, 10 collector

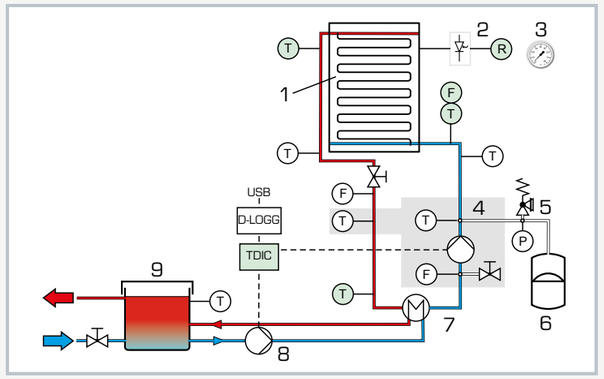

TDIC solar controller with USB interface
1 collector, 2 illuminance sensor, 3 ambient air thermometer, 4 solar circulation station with solar circuit pump, 5 safety valve, 6 expansion tank, 7 heat exchanger, 8 hot water circuit pump, 9 buffer tank;
F flow rate, T temperature, P pressure, R illuminance

Specification

[1] trainer for investigating the function and operating behaviour of a flat collector
[2] solar thermal flat collector with selectively absorbing coating
[3] adjustable collector inclination angle
[4] solar circuit with collector, pump, expansion vessel and safety valve
[5] hot water circuit with buffer tank, pump and plate heat exchanger
[6] 4 bimetallic thermometers
[7] solar controller with temperature, flow rate and illuminance sensors
[8] data logger with USB interface
[9] operation with solar radiation or HL 313.01 Artificial light source

Technical data

Solar circuit
- collector
  - absorbing surface: 2,3m^2
  - rated throughput: 20...70L/h
  - operating pressure: 1...3bar
- safety valve 4bar

Hot water circuit
- plate heat exchanger: 3kW, 10 plates
- buffer tank 70L

Measuring ranges
- flow rate: 20...150L/h
- temperature: 4x 0...120°C

230V, 50Hz, 1 phase
230V, 60Hz, 1 phase
120V, 60Hz, 1 phase
UL/CSA optional
LxWxH: 1660x800x2300mm
Weight: approx. 240kg

Scope of delivery

1 trainer
1 set of instructional material

Basic knowledge

Shallow geothermal energy

The thermal utilisation of the soil to a maximum depth of 400 m is called near-surface or shallow geothermal energy. The ground is the heat source. Due to its large mass, the ground can store thermal energy particularly well and does not react to temperature fluctuations of the ambient air. This is the advantage of the ground over air as a heat source.

There is an underground pipe system in which a liquid heat transfer medium circulates. The medium heats up in the ground and is transported to the surface for further use, e.g. for a heat pump.

Technical implementations

There are various options for using the thermal energy of the earth's surface. The technical implementation is dependent upon the local conditions, the desired power and the combination with other energy systems. In the field of shallow geothermal energy, firstly a distinction is made between open and closed systems and secondly between collectors and probes.

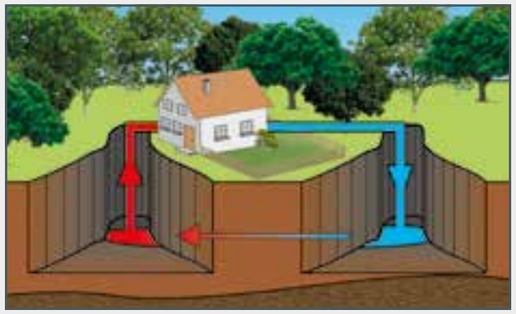

Dual well system

The dual well system is an open geothermal system without thermal retroaction on the heat source. It can be used for heating or cooling purposes, where groundwater serves as a geothermal heat source or heat sink. These systems require sufficient groundwater to be present at the site in layers near the surface.

This groundwater is pumped from a well to the surface of the earth. The well depths are between 6 m and 15 m for small installations in one- and two-family houses. In heating mode, a heat exchanger extracts heat from the groundwater. If groundwater quality is good and purity high, the heat exchanger can be designed as an evaporator of a heat pump and the groundwater can be used directly by the heat pump. In order to conserve the groundwater reservoir, the groundwater must be returned to the soil after thermal use via a discharge well. There must be sufficient distance between the well and discharge well so that there is no hydraulic short circuit. There must be no thermal retroaction in the system. One advantage of this system is the almost constant groundwater temperature throughout the year.

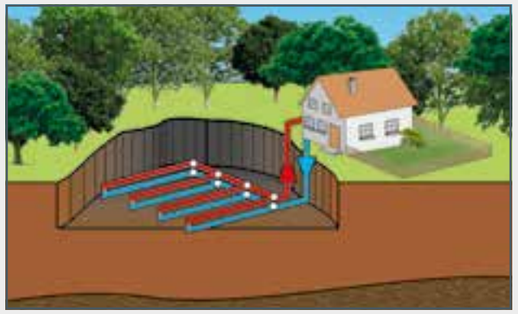

Geothermal collectors

Geothermal collector is the generic term for closed geothermal heat exchangers with thermal retroaction on the surrounding ground. The standard design is the horizontal geothermal collector.

These collectors are installed approx. 1 m to 1,5 m below unsealed ground surfaces. Due to the low installation depth, the heat transfer medium in the collector can reach temperatures below 0°C in heating mode and must therefore be frost-proof. The surrounding soil also usually freezes during the heating period. Regeneration of the temperature of the ground is mainly carried out by heat transport from nearby layers of the earth, ambient air, solar radiation and penetrating precipitation.

Depending on the ground conditions, about 15 m^2 to 30 m^2 collector surface area per kW of heating power is required. Due to the relatively high ground temperatures, geothermal collectors are rather unsuitable for cooling buildings compared to other systems.

Geothermal probes

Geothermal probes are heat exchangers that are inserted vertically or at an angle into the ground. In most cases, these consist of plastic pipes inserted into boreholes. The probes can be designed in different ways. Geothermal probes are a closed geothermal system with thermal retroaction on the ground.

For small heating systems up to 30 kW, geothermal probes usually tap depths between 50 m and 150 m, with one or two geothermal probes usually being sufficient for a single-family house. If required, more geothermal probes can also be combined to form a geothermal probe field.

Geothermal probes are further subdivided according to the type of heat transfer and heat transport. Probes in which a water/antifreeze mixture is pumped by means of a circulation pump in the circuit between the geothermal probe and the consumer are referred to as geothermal probes with forced circulation. The absorbed geothermal heat is released at the earth's surface in a heat exchanger, which is located, for example, in a heat pump. Geothermal probes with forced circulation can also be used according to the reverse principle for cooling purposes by transferring heat from a building to the cooler ground via the geothermal probe. In other words the ground can also be used as a thermal store.

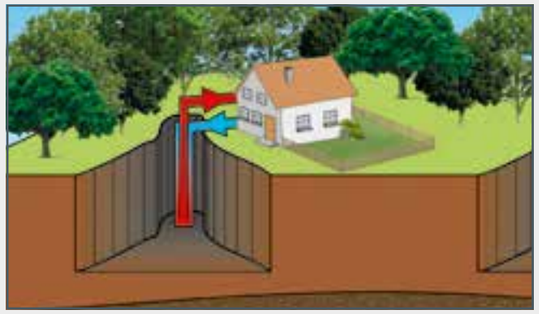

Coaxial probe

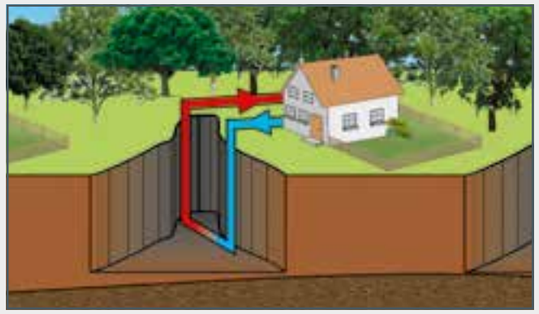

U-shaped probe

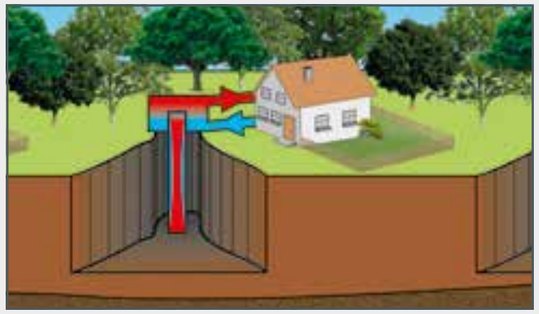

Probe with heatpipe principle

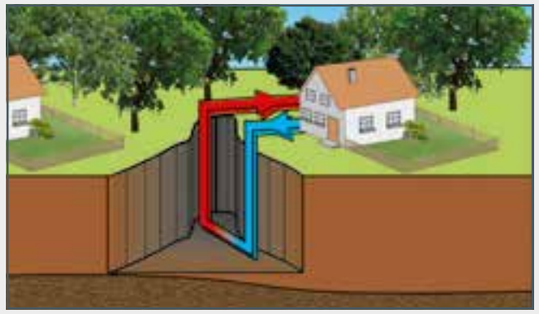

Dual U-shaped probe

ET 262
Geothermal probe with heat pipe principle

Description

- **transparent components allow observing how the state of the heat transfer medium changes**
- **operation with low-boiling heat transfer medium**

In shallow geothermal energy generation the thermal energy stored under the earth's surface is used for heating purposes.

ET 262 demonstrates the operation of a geothermal probe with heat pipe principle. The transparent experimental set-up provides an insight into the closed circuit of the heat transfer: it allows a clear view on the evaporation in the heat pipe, the condensation in the probe head and the reflux of the heat transfer medium on the inside wall of the heat pipe. The set-up also allows to take a closer look at the basic methods applied for determining the thermal conductivity of the surrounding soil of the geothermal probe.

The heat pipe whose operating behaviour is examined constitutes the core element of the trainer. The heat pipe contains a low-boiling heat transfer medium. The heat input from the soil is simulated via a temperature control jacket with heating circuit. The heat from the heat transfer medium is transferred to a working medium inside the probe head. Sensors detect the temperature and flow rate of the working medium in the heat exchanger. These measured values are used to calculate the thermal power that is transferred. The GUNT software uses the measured values to simulate the energy balance of a connected heat pump.

One method to determine the thermal conductivity of the surrounding soil is the so-called thermal response test. A pump circulates constantly heated water through a U-tube geothermal probe that is sunk in sand. During this process, the inlet and outlet temperature, the flow rate and the heating power of the geothermal probe are recorded. These measured values are used to calculate the thermal conductivity.

During another experiment, a sand cylinder is heated with a cylindrical heat source. The radially dispersed thermal temperature profile within the sand sample is detected and used to calculate the thermal conductivity within the sand sample. The results of both methods will then be compared.

The measured values are transmitted directly to a PC via USB where they can be analysed using the software included.

Learning objectives/experiments

- fundamentals of geothermal energy
- operating behaviour of a geothermal probe with heat pipe principle
- determination of the amount of heat that can be dissipated in the heat pipe with variation of the thermal load
- variation of the filling level of the heat transfer medium contained
- examination of the radial temperature profile in a sand sample and determination of the thermal conductivity
- determination of the sand's thermal conductivity by means of a thermal response test
- fundamentals and energy balance of a heat pump

ET 262
Geothermal probe with heat pipe principle

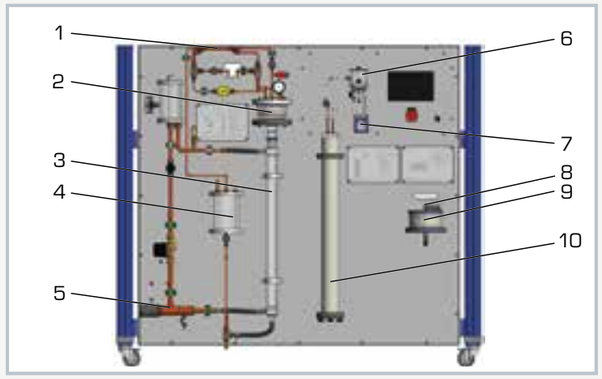

1 condensate separator, 2 heat exchanger, 3 heat pipe with temperature control jacket, 4 storage tank for heat transfer medium, 5 heater in the heating circuit, 6 water tank with heating element, 7 pump, 8 heating element, 9 sand cylinder, 10 U-tube geothermal probe

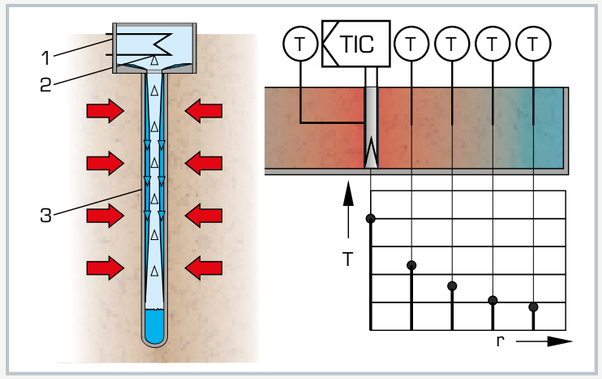

left: geothermal probe with heat pipe principle: 1 sensor head, 2 heat exchanger, 3 heat pipe, blue: liquid heat transfer medium, light blue: gaseous heat transfer medium, red arrow: geothermal heat;
right: radial heat conduction in a sand sample: T temperature, TIC temperature controller of the heater, r radius

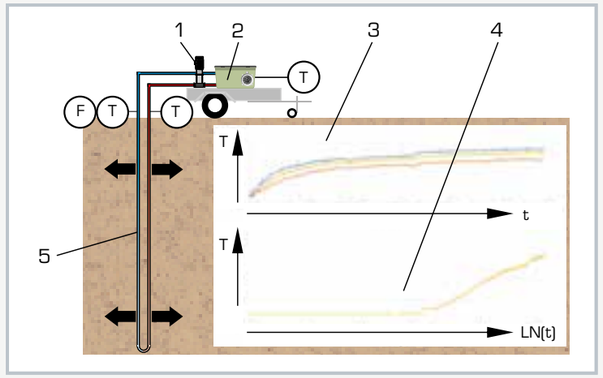

Thermal response test: 1 pump, 2 water tank with heating element, 3 time dependency of the measured temperatures, 4 logarithmic time dependency of the central water temperature, 5 U-tube geothermal probe; T temperature, F flow rate, t time, LN(t) natural logarithm of time

Specification

[1] demonstration of the operation of a geothermal probe with heat pipe principle
[2] heat pipe made of glass with transparent temperature control jacket
[3] water as a working medium for heat dissipation in the heat exchanger
[4] supply of the working medium via the lab network or via water chiller WL 110.20
[5] simulation of the energy balance of a heat pump in the GUNT software
[6] CFC-free heat transfer medium Solkatherm SES36
[7] GUNT software for data acquisition via USB under Windows 7, 8.1, 10

Technical data

Heat pipe
- length: approx. 1200mm
- external diameter heat pipe: approx. 56mm
- external diameter temperature control jacket: approx. 80mm

Heater in the heating circuit
- output: 2kW

Pump in the heating circuit
- max. flow rate: 1,9m³/h
- power consumption: 58W

U-tube geothermal probe made of copper
- length: approx. 1000mm

Pump in the thermal response test
- flow rate: 4,8...28,2L/h
- power consumption: max. 60W

Heating element in the water tank
- output: 100W

Heating element in the sand container
- output: 50W

Measuring ranges
- temperature of the heating element in the sand sample: 0...250°C
- flow rate: 0,4...6L/min

230V, 50Hz, 1 phase
LxWxH: approx. 1500x790x1900mm
Weight: approx. 250kg

Required for operation

water connection or water chiller WL 110.20

Scope of delivery

1 trainer
1 sand (25kg; 1...2mm grain size)
1 GUNT software CD + USB cable
1 set of instructional material

ET 264
Geothermal energy with two-well system

Description

- **use of geothermal energy in an open system without thermal repercussion**
- **simulation of the energy balance of a heat pump**

The scope of geothermal energy is the study and use of the heat and the temperature distribution in the ground. A geothermal plant uses the thermal energy stored below the earth's surface. Using a two-well system, for example, thermal energy is extracted from the near-surface groundwater for heating purposes. ET 264 demonstrates the operation of such a two-well system.

The trainer contains a closed water circuit with storage tank and pump. The core element is a sand bed through which water flows with a production well and an absorption well. Water (groundwater) flows in and out via two side-mounted chambers.

In the experiment, the groundwater is delivered from the production well to a heat exchanger and the thermal energy is transmitted from the groundwater to the working medium.

The water then flows into an absorption well. From here, the water is delivered via the drain chamber into the storage tank, is heated and returned to the experimental section. The groundwater temperature in the storage tank is adjusted by means of a controlled heater. The flow rate of the pump in the production well can be adjusted. The groundwater flow through the sand bed is adjusted using height-adjustable discharges. The working medium is added either via the laboratory supply or via the WL 110.20 water chiller.

From the measured temperatures and the flow rate, the transmitted thermal output is determined. A multi-tube manometer visualises the groundwater levels of both wells. The measured values are displayed on the trainer and can be transmitted simultaneously via USB directly to a PC, where they can be analysed using the GUNT software included. By means of the measured values, a heat pump which is connected to the two-well system is simulated.

Learning objectives/experiments

- fundamentals of geothermal use
- operating behaviour of a two-well system
- hydraulic and thermal properties of the ground
- determination of the usable heat capacity
- fundamentals and energy balance of a heat pump

ET 264
Geothermal energy with two-well system

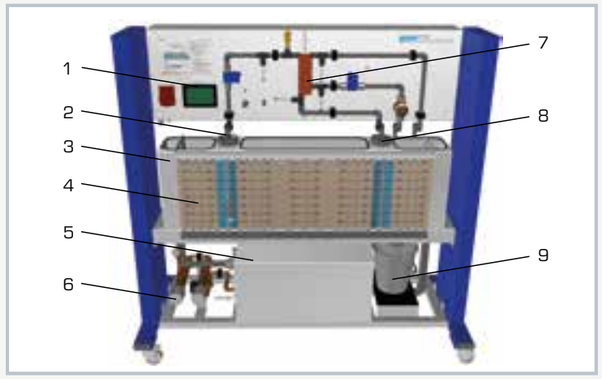

1 display, 2 production well, 3 experimental tank, 4 multi-tube manometer, 5 storage tank, 6 heater, 7 heat exchanger, 8 absorption well, 9 tank

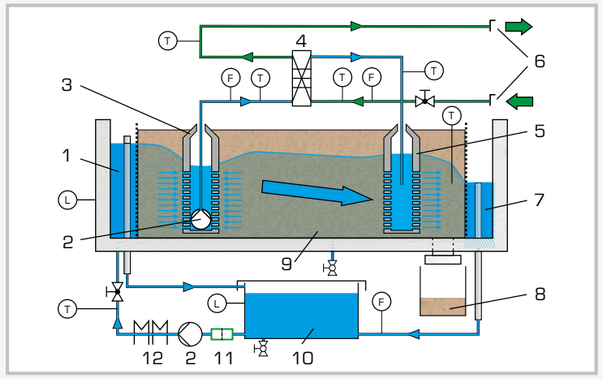

1 feed chamber, 2 pump, 3 production well, 4 heat exchanger, 5 absorption well, 6 working medium connection, 7 drain chamber, 8 tank, 9 experimental section, 10 storage tank, 11 filter, 12 heater; F flow rate, L level, T temperature, blue: water, green: working medium

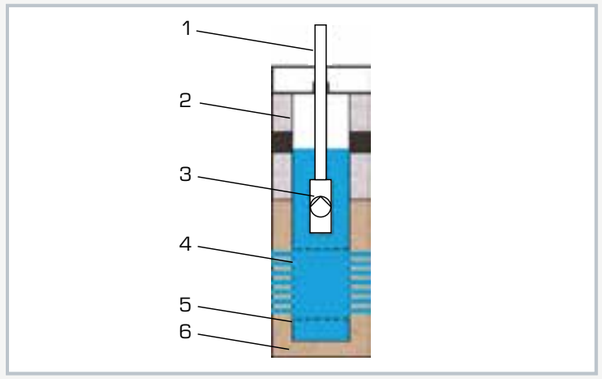

Typical design of a production well: 1 rising pipe, 2 extension pipe, 3 pump, 4 filter pipe, 5 sump pipe, 6 filter gravel

Specification

[1] demonstration and operation of a two-well system for using geothermal energy
[2] temperature-controlled groundwater circuit
[3] height-adjustable overflows for adjusting the groundwater flow
[4] adjustable flow rate of the pump in the production well
[5] measurement of temperature and flow rate to determine the transmitted heat capacity
[6] multi-tube manometer for visualising the groundwater levels
[7] supply of the working medium via laboratory supply or the WL 110.20 water chiller
[8] calculation of the transmitted heat capacity and simulation of the energy balance of a heat pump
[9] GUNT software for data acquisition via USB under Windows 7, 8.1, 10

Technical data

Experimental section
- LxWxH: approx. 1600x270x470mm

Production well pump
- power consumption: max. 72W
- max. flow rate: approx. 17L/min

Storage tank pump
- power consumption: approx. 70W
- max. flow rate: approx. 20L/min

Storage tank
- capacity: approx. 135L

Plate heat exchanger
- heat transfer surface: 0,39m^2
- number of plates: 30

Heater
- power consumption: max. 8kW

Measuring ranges
- temperature: 0...45°C
- flow rate:
  - 0...17L/min (production well)
  - 5...50L/min (groundwater circuit)

400V, 50Hz, 3 phases
230V, 60Hz, 3 phases; 400V, 60Hz, 3 phases
UL/CSA optional
LxWxH: 1990x790x1920mm
Empty weight: approx. 320kg

Required for operation

water connection, drain or WL 110.20, PC with Windows recommended

Scope of delivery

1 trainer
1 sand (250kg, grain size 1...2mm)
1 GUNT software CD + USB cable
1 set of instructional material

Basic knowledge

Heat pump

What is a heat pump?

A heat pump transports heat from a low temperature level to a higher temperature level. To do this, the heat pump requires drive power. This can be mechanical, electrical or thermal. Usually heat pumps which operate according to the principle of a compression refrigeration system are used. Less often, heat pumps running on the absorption process are used.

The COP is an important indicator for the operation of heat pumps. COP stands for "Coefficient of Performance". The COP indicates how efficiently a heat pump works. The COP indicates the ratio of heat capacity and the required drive power. This value allows an easy comparison between different heat pumps.

The COP is directly dependent on the temperature of the heat source and the heating temperature in the building. Therefore, the COP changes at each operating point of the heat pump. The larger the COP, the more effective the heat pump.

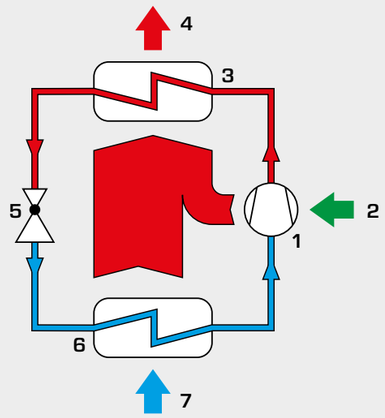

1 compressor, **2** mechanical work, **3** condenser, **4** heat dissipation, **5** expansion valve, **6** evaporator, **7** heat absorption

Where does the heat pump get its energy from?

A heat pump usually extracts the energy from the environment. Air, groundwater, the earth or river water are common. If the energy is extracted from the ground, this is known as shallow geothermal energy. An energy source temperature which is as high and constant as possible is the key for high efficiency. The temperature must not drop off too much in winter, when the most heating power has to be provided. For groundwater and the ground, the heat exchangers have to be very large in order to avoid any local sub-cooling. When choosing the heat source, factors such as investment cost, efficiency, availability and obtaining permission have to be weighed against each other. Using low-order waste heat such as exhaust air or cooling water is particularly cost-effective.

The lower the temperature difference between heat source (evaporator) and heating temperature (condenser), the larger the COP.

Energy source	Advantage	Disadvantage
outside air	low investment	low COP in winter
river water	low investment	low COP in winter
groundwater	good, constant power	high investment, permission
ground	good, constant power	large space requirement

A heat pump can be used for cooling or heating

Because they have the same principle of operation, a heat pump can function as a refrigeration system. As such, it is possible to use the same system for heating in the winter and for cooling in the summer. Only the functions of evaporator and condenser are swapped. This takes place by switching over with two non-return valves and a second expansion valve. Most of these so-called split devices for room cooling already have a heater function included.

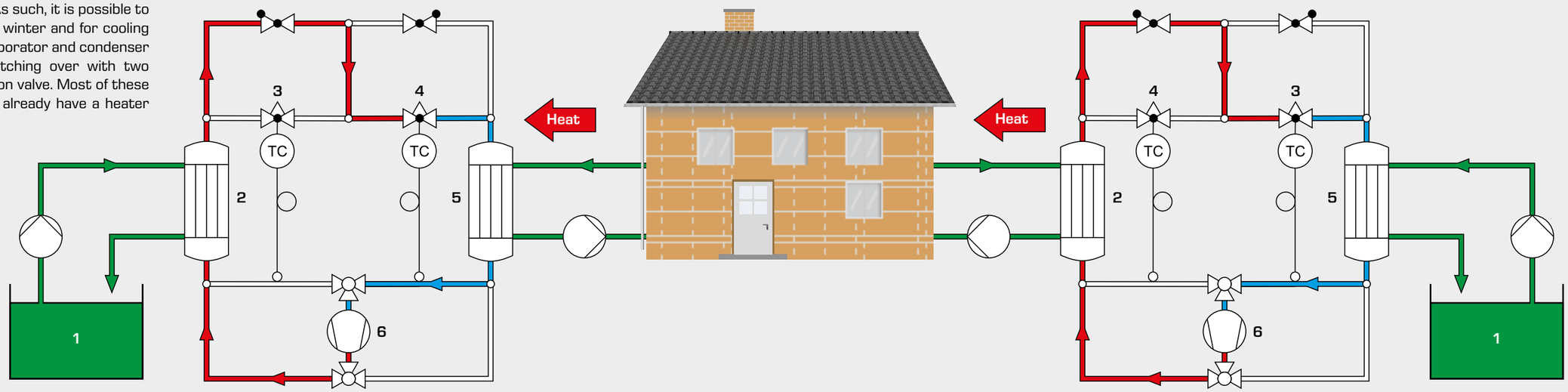

Summer

1 heat sink, **2** condenser, **3** expansion valve 1,
4 expansion valve 2, **5** evaporator, **6** compressor,
water/solar circuit, refrigerant (low pressure),
refrigerant (high pressure)

Winter

1 heat source, **2** condenser, **3** expansion valve 1,
4 expansion valve 2, **5** evaporator, **6** compressor,
water/solar circuit, refrigerant (low pressure),
refrigerant (high pressure)

ET 102
Heat pump

Learning objectives/experiments

- design and operation of an air-to-water heat pump
- representation of the thermodynamic cycle in the log p-h diagram
- energy balances
- determination of important characteristic variables
  - compressor pressure ratio
  - ideal coefficient of performance
  - real coefficient of performance
- dependence of the real coefficient of performance on the temperature difference (air-to-water)
- operating behaviour under load

Description

- **utilisation of ambient heat for water heating**
- **display of all relevant values at the location of measurement**

With the air-to-water heat pump ET 102 the ambient heat of the air is used to heat water.

The heat pump circuit consists of a compressor, an evaporator with fan, a thermostatic expansion valve and a coaxial coil heat exchanger as condenser. All components are clearly arranged in the trainer.

The compressed refrigerant vapour condenses in the outer pipe of the condenser and thereby discharges heat to the water in the inner pipe. The liquid refrigerant evaporates at low pressure in the finned tube evaporator and thereby absorbs heat from the ambient air.

The hot water circuit consists of a tank, a pump and the condenser as heater. For a continuous operation the generated heat is dissipated via an external cooling water connection. The cooling water flow rate is set via a valve and measured.

All relevant measured values are recorded by sensors and displayed. The simultaneous transmission of the measurements to a data recording software enables analysis and the representation of the process in the log p-h diagram. The software also displays the key characteristics variables of the process, such as the compressor pressure ratio and the coefficient of performance.

ET 102
Heat pump

1 expansion valve, 2 evaporator with fan, 3 pressure sensor, 4 pressure switch, 5 displays and controls, 6 compressor, 7 cooling water flow meter, 8 pump, 9 hot water tank, 10 receiver, 11 cocondenser

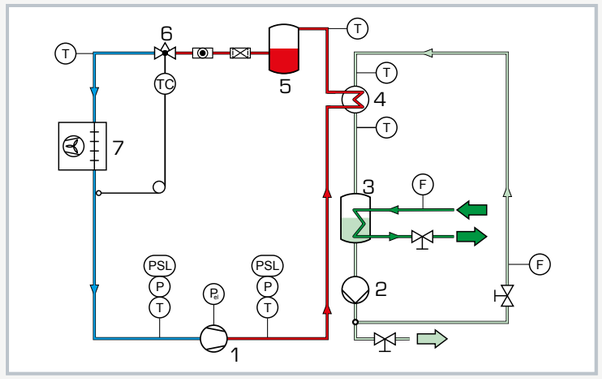

1 compressor, 2 pump, 3 hot water tank with external cooling water connection, 4 condenser, 5 receiver, 6 expansion valve, 7 evaporator with fan;
T temperature, P pressure, F flow rate, P_{el} power, PSH, PSL pressure switch;
blue/red: refrigeration circuit, light green: hot water circuit, green: cooling water

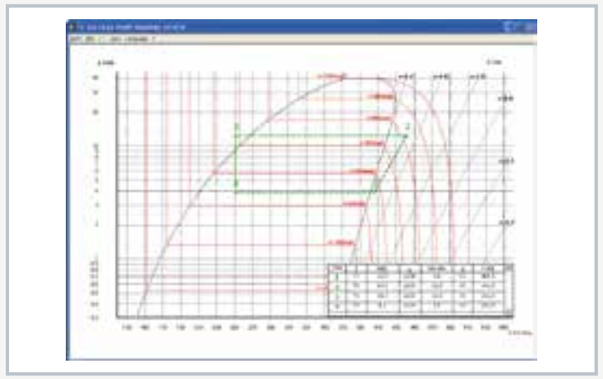

Software screenshot: log p-h diagram

Specification

[1] investigation of a heat pump with a water circuit as load
[2] refrigeration circuit with compressor, evaporator with fan, thermostatic expansion valve and coaxial coil heat exchanger as condenser
[3] hot water circuit with pump, tank and condenser as heater
[4] additional cooling via pipe coil in the hot water tank and external cooling water
[5] record and display of all relevant measured values and
[6] GUNT software for data acquisition via USB under Windows 7, 8.1, 10

Technical data

Compressor
- capacity: 372W at 7,2/32°C

Coaxial coil heat exchanger (condenser)
- refrigerant content: 0,55L
- water content: 0,3L

Finned tube evaporator
- transfer area: approx. 0,175m^2

Pump
- max. flow rate: 1,9m^3/h
- max. head: 1,4m

Hot water tank volume: approx. 4,5L

Measuring ranges
- pressure: 2x -1...15bar
- temperature: 4x 0...100°C, 2x -100...100°C
- power: 1x 0...6000W
- flow rate (water): 1x 0...108L/h
- flow rate (cooling water): 1x 10...160L/h

230V, 50Hz, 1 phase
230V, 60Hz, 1 phase
120V, 60Hz, 1 phase
LxWxH: 1620x790x1910mm
Weight: approx. 192kg

Required for operation

water connection, drain
PC with Windows recommended

Scope of delivery

1 trainer
1 GUNT software CD + USB cable
1 set of instructional material

ET 405
Heat pump for cooling and heating operation

Description

- **air-to-water heat pump**
- **heating and cooling operation possible**
- **high practical relevance by using industrial components from refrigeration**
- **different operating modes can be set via solenoid valves**

Refrigeration systems and heat pumps only differ in the definition of their use, but can be of the same design. For example, goods can be refrigerated in a supermarket and the store heated with the waste heat. The store can also be cooled with the same system in the summer.

With ET 405 the cooling and heating operation can be investigated. Different operating modes can be selected via solenoid valves.

The refrigeration circuit with compressor and condenser (heat exchanger with fan) includes two evaporators with fans (refrigeration stage and freezing stage) and thermostatic expansion valves. The two evaporators can be connected in parallel or in series. For the connection in series the capillary tube serves as expansion element for the refrigeration stage evaporator. The refrigerant circuit is connected to a glycol-water circuit via a coaxial coil heat exchanger. Via solenoid valves the coaxial coil heat exchanger can be switched as an evaporator or condenser. Thus the glycol-water mixture in the tank can be heated or cooled. In pure cooling operation (without heating function) the heat exchanger with fan as air-cooled condenser dissipates the heat. This heat exchanger can be also switched as an evaporator.

The measured values are read from digital displays and can at the same time be transmitted via USB directly to a PC where they can be analysed using the software included. The software enables a clear representation of the process.

Learning objectives/experiments

- design, operation and key components of a heat pump or refrigeration system
- representation of the thermodynamic cycle in the log p-h diagram
- comparing different operating modes
- measurement of compressor capacity and heating or cooling capacity in the glycol-water circuit
- determination of
  - efficiency
  - coefficient of performance of heat pump and refrigeration system
  - specific compressor load
  - compressor pressure ratio
  - specific cooling capacity
  - specific refrigeration capacity
- comparing key figures of heat pump and refrigeration system

ET 405
Heat pump for cooling and heating operation

1 evaporator, 2 expansion valve, 3 capillary tube, 4 freezing stage evaporator, 5 evaporation pressure controller, 6 compressor, 7 receiver, 8 heat exchanger with fan, 9 pump, 10 display and control elements, 11 tank for glycol-water mixture, 12 flow meter, 13 solenoid valve, 14 coaxial coil heat exchanger

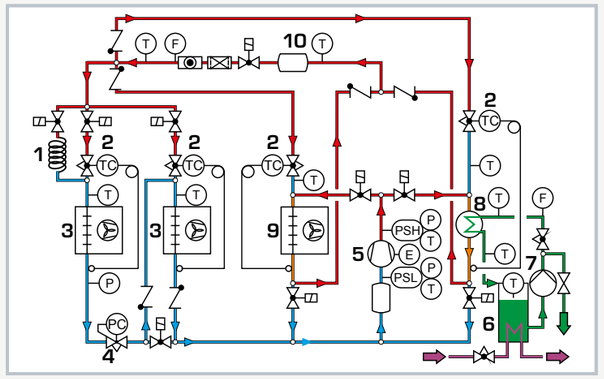

1 capillary tube, 2 expansion valve, 3 evaporator, 4 evaporation pressure controller, 5 compressor, 6 tank for glycol-water mixture, 7 pump, 8 coaxial coil heat exchanger, 9 heat exchanger with fan, 10 receiver; T temperature, P pressure, F flow rate, PSH, PSL pressure switch

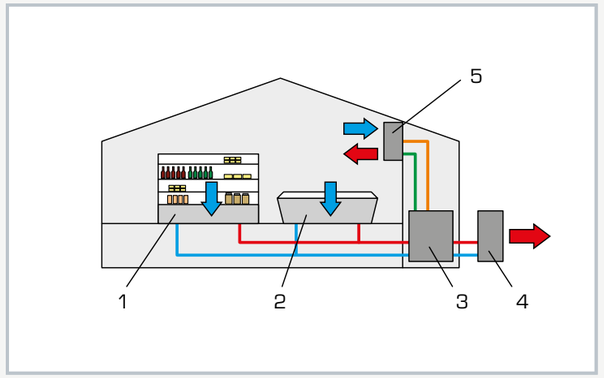

Supermarket application: 1 refrigeration units, 2 freezer, 3 heat pump, 4 external condenser, 5 convector to heat or cool the sales room

Specification

[1] air-to-water heat pump for cooling or heating operation
[2] different operating modes selectable via solenoid valves
[3] refrigeration circuit with compressor, condenser (heat exchanger with fan), 2 evaporators with fan (refrigeration and freezing stage)
[4] glycol-water circuit with tank, pump and coaxial coil heat exchanger
[5] coaxial coil heat exchanger and heat exchanger with fan can both be used as condenser or evaporator in the refrigeration circuit
[6] 1 thermostatic expansion valve each for all heat exchangers and evaporators
[7] 1 additional evaporation pressure controller and 1 capillary tube for the refrigeration stage evaporator
[8] displays for temperature, pressure, flow rate and power consumption of the compressor
[9] GUNT software for data acquisition via USB under Windows 7, 8.1, 10
[10] refrigerant R134a, CFC-free

Technical data

Compressor
- refrigeration capacity: 934W at -6,7/55°C
- power consumption: 620W at -6,7/55°C

Heat exchanger with fan
- transfer area: 1,25m^2, volumetric air flow rate: 650m^3/h, capacity: 1148W at DT=15K

Evaporators with fan
- refrigeration stage
  - transfer area: 1,21m^2, volumetric air flow rate: 80m^3/h, capacity: 140W (t_{L1}=5°C, DT1=10K)
- freezing stage
  - transfer area: 3,62m^2, volumetric air flow rate: 125m^3/h, capacity: 330W (t_{L1}=5°C, DT1=10K)

Coaxial coil heat exchanger
- capacity: 1,6kW at 0°C; DT=9K

Measuring ranges
- temperature: 11x -50...150°C
- pressure: 2x -1...15bar, 1x -1...24bar
- flow rate: 1x 4...40L/h (refrigerant)
- flow rate: 1x 2,5...65g/s (glycol-water)
- power: 0...1150W

230V, 50Hz, 1 phase
230V, 60Hz, 1 phase; 120V, 60Hz, 1 phase
UL/CSA optional
LxWxH: 2210x800x1900mm
Weight: approx. 330kg

Required for operation

water connection, drain
PC with Windows recommended

Scope of delivery

1 trainer
1 set of accessories
1 GUNT software CD + USB cable
1 set of instructional material

ET 420
Ice stores in refrigeration

With growing decentralisation of the energy supply, the storage of energy is becoming increasingly important. The storage of thermal energy for domestic water heating has been used successfully in building services engineering for years. However, the use of ice stores for cooling buildings is still an exception.

The heat to be dissipated, to cool buildings, fluctuates during the course of the day. The demand for cooling is usually much higher during the day than at night. In order to be able to cool buildings under the highest possible load demand, refrigeration plants are designed to meet the expected peak load. This leads to an over-dimensioning of the refrigeration technology, so that affected plants are operated very inefficiently under partial load conditions.

Ice stores can support the refrigeration plant in the case of particularly high cooling loads. Ice stores for assisting the refrigeration plant are mainly used in large non-residential buildings. In times of low cooling demand, the store is charged via the refrigeration plant and can be discharged again in case of peak loads to support the refrigeration plant. The capacity of the refrigeration technology can thus be designed to be smaller. The use of smaller refrigeration plants saves operating and investment costs.

If heat is removed from a liquid store, the temperature of the storage medium falls. The water remains liquid and there is no change to the aggregate state. The ice store belongs to the group of latent storage. The water in the ice store changes its aggregate state. The temperature of the water is constant during the phase transition. If heat is still dissipated, the temperature of the water in the ice store remains constant at 0°C.

The discharged energy corresponds to the phase change work during water freezing.

To discharge the ice store, heat is transferred to the ice. The temperature is constant until the ice in the store has melted. Due to the phase change work, a large amount of thermal energy can be stored at a low temperature difference.

ET 420 offers a refrigeration plant with ice store, which can be operated entirely as required. The plant concept includes a dry cooling tower **9**, which represents the heat exchanger in the building to be supplied during the experiments and a wet cooling tower **8**, which represents the heat dissipation to the free environment. The ice store enables various operating states to efficiently serve as the fluctuating heating and cooling demand of a building.

The following operating states can be set via the position of the valves:

- charging the ice store
- cooling via the ice store
- cooling via the refrigeration plant
- cooling via the refrigeration plant and ice store
- heating via heat pump
- heating via heat pump and charging the ice store
- heat dissipation via the wet cooling tower

1 switch cabinet,
2 glycol storage tanks,
3 circulation pumps,
4 ice store,
5 refrigerant compressor,
6 refrigerant condenser,
7 refrigerant evaporator,
8 wet cooling tower,
9 dry cooling tower

Trainer with refrigeration plant and ice store

Wet cooling tower

Dry cooling tower

ET 420
Ice stores in refrigeration

Thermal supply of a building, using the operating modes of ET 420 as an example

The following shows how a demand-based supply of thermal energy via a refrigeration plant with ice store functions in practice. The load profile of an office building is taken as an example.

The ice store is operated using the example of a daily cycle. The primary objective is to respond to variable cooling and heating loads and to achieve an efficient supply of the building via a sensible sequence of operating states.

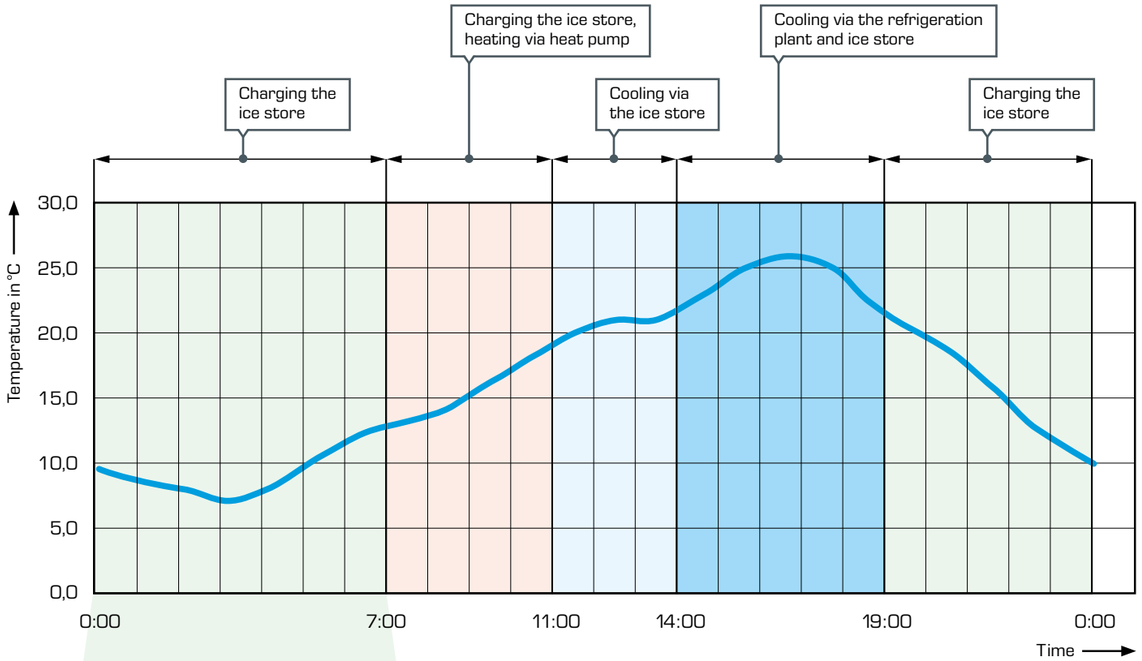

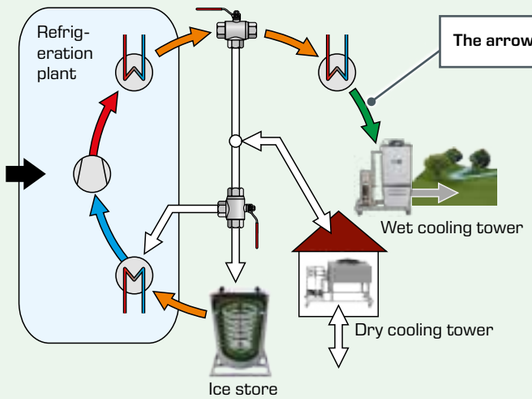

Charging the ice store

No persons are present between midnight and 7 am. There is no need for air conditioning, the ice store is charged.

To do this, the heat is dissipated from the ice store via the evaporator of the refrigerant circuit. (This heat dissipation causes the water in the ice store to freeze; the ice store is charged.)

The waste heat from the refrigerant circuit is dissipated to the environment via the wet cooling tower.

glycol, LP refrigerant, HP refrigerant, water, air,
electrical power, inactive process

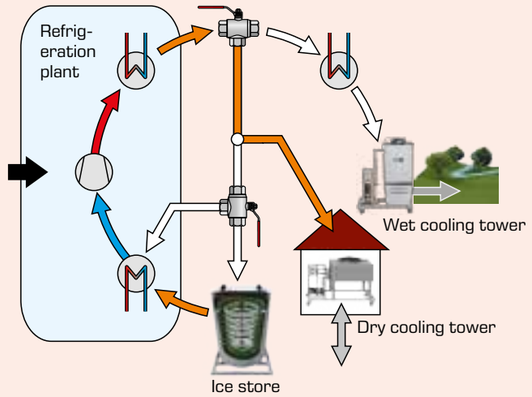

Charging the ice store and heating via waste heat

In the morning hours between 7 am and 11 am the temperature in the building is less than 20°C. There is a need for heating.

The heat generated during the ice store charging process can be used for heating. To do this, the heat is dissipated from the ice store via the evaporator of the refrigerant circuit. The ice store is charged by this heat dissipation.

The usable waste heat from the refrigerant circuit is transferred to the dry cooling tower via the condenser, thus heating the building. The system operates in heat pump mode, while simultaneously using heat and cold.

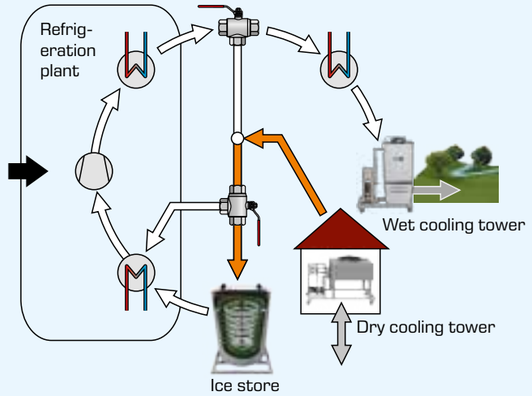

Cooling via the ice store

In the period between 11 am and 2 pm, the temperatures in the building are between 20 and 23°C. There is a relatively low cooling demand, which can be covered via the ice store.

The ice in the ice store melts and absorbs heat from the dry cooling tower. This cools the dry cooling tower. This causes the building to cool down. The refrigeration plant does not need to be operated to dissipate the cooling load.

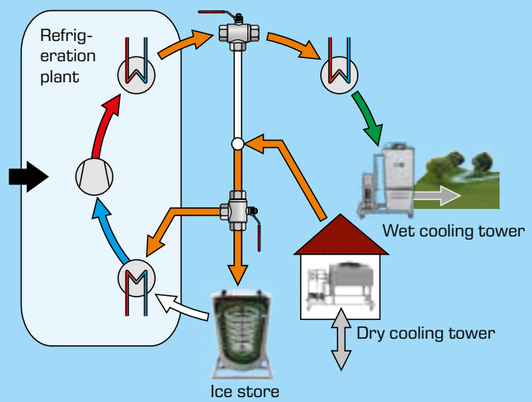

Cooling via the refrigeration plant and ice store

In the period between 2 pm and 7 pm, the temperatures in the building are between 23 and 27°C. This peak in the cooling load is covered by the combined cooling from ice store and refrigeration plant.

The heat is dissipated from the dry cooling tower and the building is cooled in this way. Part of the heat is transferred to the ice store, where the ice melts in the ice store and absorbs the heat from the dry cooling tower. In order to dissipate the particularly high cooling load, the refrigeration plant is also operated and transfers part of the heat from the dry cooling tower, via the evaporator.

The waste heat from the refrigerant circuit is dissipated to the environment via the wet cooling tower.

Charging the ice store

No persons are present in the building from 7 pm onwards. There is no demand for air conditioning.
During this time, the ice store is charged via the refrigeration plant.

ET 420
Ice stores in refrigeration

The illustration shows the trainer on the left, the wet cooling tower in the middle and the dry cooling tower on the right.

Description

- **industrial refrigeration system with ice store, dry cooling tower and wet cooling tower**
- **energy efficiency in refrigeration and air conditioning technology**

Ice stores are used in refrigeration to cover an increased additional cooling requirement (peak load). The ice stores are usually charged over night when general energy requirements and energy costs are low.

To charge and discharge the ice store a circuit with glycol-water mixture is used between the ice store and the compression refrigeration system. When charging the ice store the glycol-water mixture is cooled via a compression refrigeration system to below 0°C and thereby withdraws heat from the water in the ice store, causing the water to freeze. During discharging the melting ice withdraws heat from the glycol-water mixture causing the mixture to cool down. During this cooling process the ice store replaces or supports the compression refrigeration system.

ET 420 consists of an ice store, a refrigeration system, a circuit with glycol-water mixture, a dry and a wet cooling tower. During the evaporation of the refrigerant in the refrigeration circuit and during discharging of the ice store, heat is withdrawn from the mixture, whereas during the condensing of the refrigerant heat is added. As required the cooling towers add heat to or withdraw heat from the mixture.

The record of all required variables enables an energy balance for the individual processes. The measured values are read from digital displays and can be transmitted simultaneously via USB directly to a PC where they can be analysed using the software included.

Learning objectives/experiments

- design and operation of an energy-efficient refrigeration system
- function and operation of an ice store
  - charge
  - discharge
- energy flow balance
- energy transport via different media
- compression refrigeration cycle in the log p-h diagram
- function and operation of a wet cooling tower
- function and operation of a dry cooling tower

ET 420
Ice stores in refrigeration

1 displays and controls, 2 pump, 3 manometer, 4 flow meter, 5 evaporator, 6 condenser, 7 compressor, 8 ice store, 9 3-way valve, 10 compensation tank (glycol-water mixture)

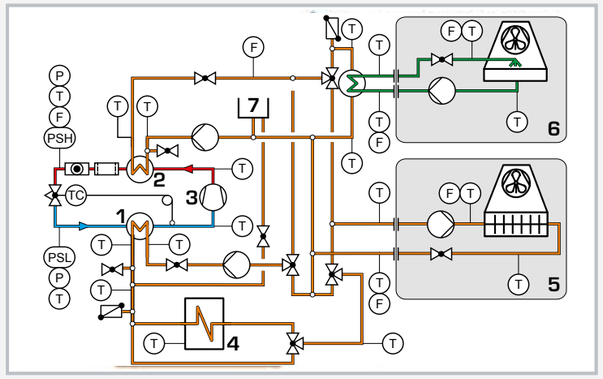

1 evaporator, 2 condenser, 3 compressor, 4 ice store, 5 dry cooling tower, 6 wet cooling tower, 7 compensation tank; pipes: green: water, blue/red: refrigerant, orange: glycol-water mixture

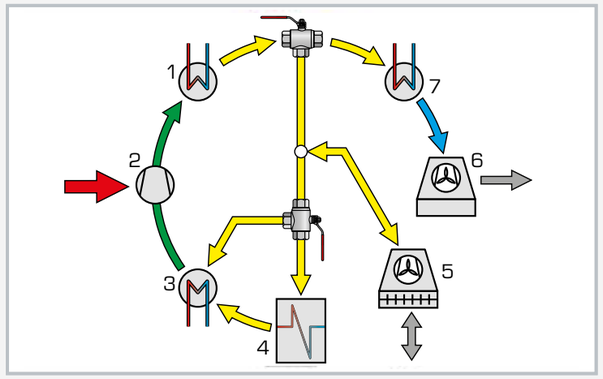

Energy flows in the system: 1 condenser, 2 compressor, 3 evaporator, 4 ice store, 5 dry cooling tower, 6 wet cooling tower, 7 heat exchanger to wet cooling tower; blue: water, yellow: glycol-water mixture, green: refrigerant, grey: air, red: electric power

Specification

[1] investigation of the charging and discharging of an ice store
[2] system with ice store, compression refrigeration system, dry and wet cooling towers
[3] refrigeration circuit for R134a with compressor, condenser, evaporator and expansion valve
[4] glycol-water circuits with pumps: cooling of the refrigerant condenser, heating of the refrigerant evaporator, charging/discharging of the ice store, operation of the dry cooling tower
[5] water circuit with pump to operate the wet cooling tower
[6] measurement of all relevant temperatures, pressures, flow rates and power consumption to balance the processes
[7] GUNT software for data acquisition via USB under Windows 7, 8.1, 10

Technical data

Compressor, refrigeration capacity: approx. 1,7kW at -15/32°C
Pumps (glycol-water mixture)
- max. flow rate: 4,5m³/h
- max. head: 5,6m

Pump wet cooling tower (water)
- max. flow rate: 4,5m³/h
- max. head: 18m

Ice store: 150L
Compensation tank: 20L
Wet cooling tower, rated cooling capacity: 12kW
Dry cooling tower, rated cooling capacity: 13,8kW

Measuring ranges
- temperature: 12x -20...100°C, 4x -50...150°C, 4x 0...60°C
- pressure: 1x -1...9bar, 1x -1...24bar
- flow rate: 3x 100...1200L/h, 2x 60...1500L/h, 1x 150...1600L/h, 1x 10...100L/h (R134a)
- power: 0...2250W

230V, 50Hz, 1 phase
230V, 60Hz, 1 phase; 230V, 60Hz, 3 phases
UL/CSA optional
LxWxH: approx. 2200x790x1900mm (trainer)
LxWxH: approx. 1250x790x1700mm (wet cool. tower)
LxWxH: approx. 1600x900x1140mm (dry cool. tower)
Total weight: approx. 650kg

Required for operation

water connection, drain
ventilation, exhaust air
PC with Windows recommended

Scope of delivery

1 trainer
1 wet cooling tower
1 dry cooling tower
1 set of hoses
1 GUNT software CD + USB cable
1 set of instructional material

Basic knowledge

Ventilation systems and their components

Ventilation systems ensure the change of air in residential, office and equipment rooms.

Ventilation systems are not only concerned with air supply and exhaust, but also with the consideration of **thermal energy:** sophisticated ventilation systems can transfer the heat of the outflowing air to the incoming air, so that hardly any thermal energy leaves the system.

There are basically three types of system:

1. exhaust air system: the "used" air from the building is expelled to the outside (outgoing air)
2. ventilation system: in addition to the exhaust air system, a supply system supplies fresh air to the living areas
3. different techniques that target the saving of heating energy, e.g. via heat recovery or geothermal heat exchangers

These systems are grouped together under the term controlled residential ventilation. Non-controlled ventilation of living space, on the other hand, is the free ventilation of living space by means of window ventilation, joint ventilation or shaft ventilation.

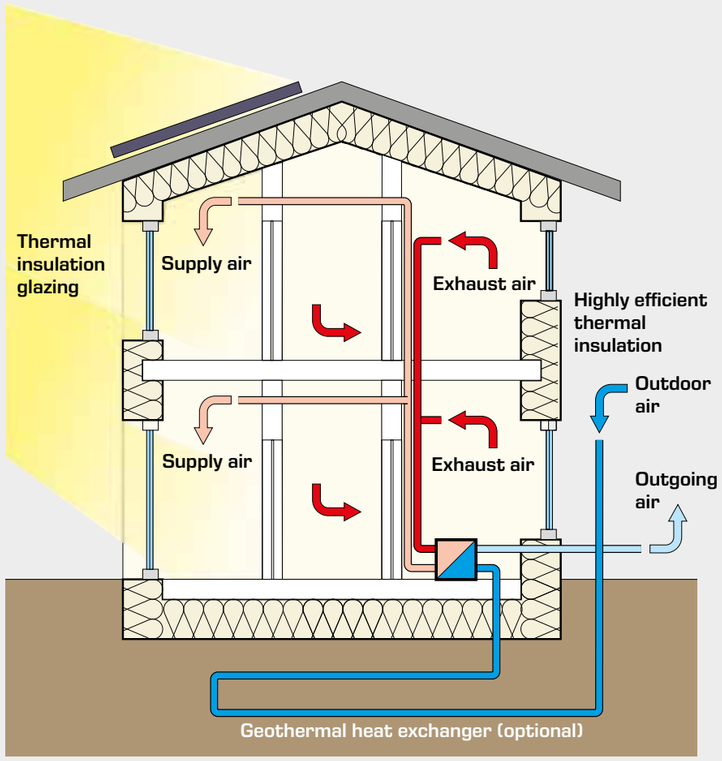

Ventilation with heat recovery

- **outside air:** air drawn in from the environment,
- **outgoing air:** air released into the environment,
- **supply air:** air entering a room or facility after it has been treated, e.g. by filtering or heating
- **exhaust air:** air leaving a room

The design of ventilation systems requires knowledge of fluid mechanics, e.g. the characteristic variables of fans and the pressure losses of pipe elements. GUNT's **product area 4 Fluid mechanics** deals with these aspects.

Heat recovery ventilation

Processes in which the residual heat of a mass flow is used after its primary use are referred to as heat recovery. The heat gained in this way would otherwise be wasted without heat recovery. Heat recovery can be used to reduce the primary energy consumption for heating buildings.

Ventilation systems with heat recovery are state-of-the-art today. For heat recovery, heat exchangers are built into the supply and exhaust air ducts of the ventilation system. They utilise the temperature difference between exhaust air and fresh air and can be operated according to demand. The thermal energy of the outgoing air is used to heat up outside air in winter and cool it in summer.

Ventilation system: in addition to the exhaust air system, a supply system supplies fresh air to the living areas.

HL 720
Ventilation system

The illustration shows a similar unit.

Learning objectives/experiments

- design and operation of a ventilation system
- pressure measurements in the air duct
- determine the electric drive power of the fan
- determine the flow rate
- design and operation of components such as
  - protective grating
  - multi-leaf damper
  - filter
  - heat exchanger
  - fan
  - inspection cover
  - sound insulation link
  - ventilation grill with adjustable flow rate
  - fire protection flap
  - ceiling vents

Description

- **ventilation system with air handler**
- **high practical relevance due to the use of industrial components from ventilation technology**
- **representation of pressure curves**

In building services engineering ventilation systems are used for commercial premises, hospitals, restaurants or conference rooms to ensure the air exchange in the individual rooms. In real air handling units the air is heated or cooled by a heat exchanger and cleaned by filters, e.g. from pollen.

HL 720 demonstrates the operation of a ventilation system and its components. The components used are common in commercial ventilation technology and therefore are of high practical relevance. The ventilation system is operated as a pure air supply system.

The air enters via a weather louvre and flows through the components of the ventilation system, such as multi-leaf damper and filter. A fan ensures the air transport. Further down the air duct, typical components, such as sound insulation link, inspection flap, various air outlets and fire protection flap are arranged.

Sight windows enable an insight into the sound insulation link, filter and fan. The original component function remains intact.

The record of pressures and differential pressures at relevant measuring points enables the representation of a pressure curve for the whole system. The components act as in real ventilation systems as flow resistances. The electric drive power of the fan and the volumetric air flow rate are calculated.

HL 720
Ventilation system

1 fire protection flap, 2 inclined tube manometer, 3 weather louvre, 4 multi-leaf damper, 5 filter, 6 heat exchanger, 7 fan with drive motor, 8 inspection cover, 9 air duct, 10 disc valve, 11 ceiling vent, 12 wall vent

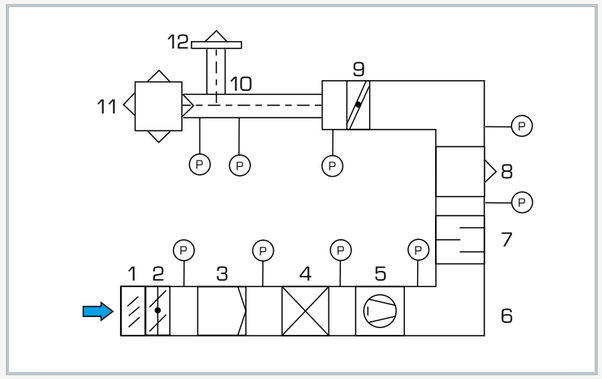

1 weather louvre, 2 multi-leaf damper, 3 filter, 4 heat exchanger, 5 fan, 6 air duct, 7 sound insulation link, 8 wall vent, 9 fire protection flap, 10 branch, 11 air outlet for ceiling installations, 12 disc valve; P pressure

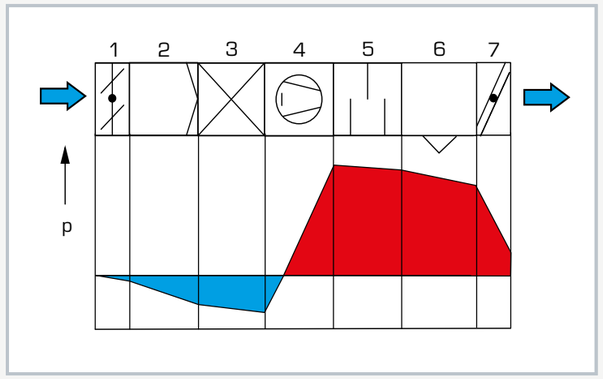

Pressure curve within the ventilation system: 1 multi-leaf damper, 2 filter, 3 heat exchanger, 4 fan, 5 sound insulation link, 6 wall vent, 7 fire protection flap;
red: overpressure, blue: vacuum

Specification

[1] design and operation of a ventilation system
[2] all components from ventilation technology, some with sight windows
[3] protective grating and adjustable multi-leaf damper at the air inlet
[4] filter for air purification
[5] belt-driven radial fan
[6] 2 sound insulation links
[7] various air outlets for air distribution in the room: disc valve, ceiling vent and ventilation grill with adjustable flow rate
[8] inspection cover for inspection purposes
[9] fire protection flap prevents the cross-over of fire and smoke in the air duct
[10] air duct with pressure measurement connections
[11] pressure measurements with inclined tube manometer
[12] current measurement to determine the power consumption of the fan
[13] determine the flow rate via differential pressure

Technical data

Air duct:
- 2 parts with WxH 630x305mm and 630x630mm

Fan
- max. flow rate: 2500m^3/h
- drive motor: 750W

Measuring ranges
- pressure: 0...7,5mbar
- current: 0...4A

400V, 50Hz, 3 phases
400V, 60Hz, 3 phases; 230V, 60Hz, 3 phases
UL/CSA optional
LxWxH: 1960x900x2000mm
Weight: approx. 263kg

Scope of delivery

1 experimental plant
1 set of instructional material

Basic knowledge

Fundamentals of air conditioning

The purpose of air conditioning is to create a room climate comfortable for people. The conditions for describing comfort are standardised in accordance with DIN 1946 and DIN EN 13779. While the temperature should be between 20 and 26°C, a relative humidity between 30 and 65 % is permitted.

Air conditioning therefore means to affect the room air in such a way that people are comfortable and their productivity is not impeded.

The condition of the air is characterised by temperature, pressure and humidity.

(Normally, the air pressure is not changed. Exception: air conditioning in the aircraft cabin)

Comfort zone in the h-x diagram for humid air by mollier

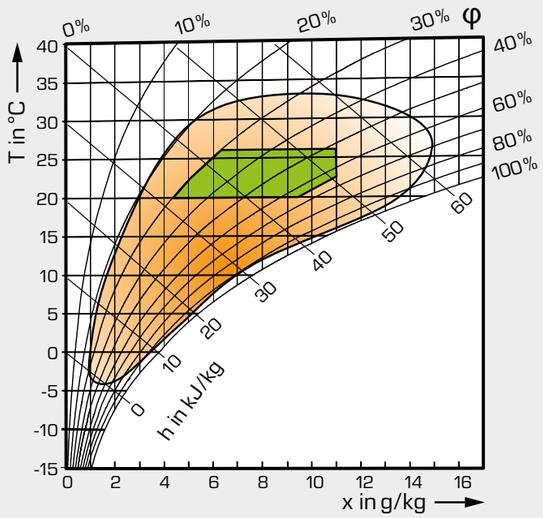

In the h-x diagram temperature **T**, enthalpy **h** and relative humidity **φ** are plotted above the absolute humidity **x**.

In the exemplary diagram the comfort zone according to DIN 1946 is drawn in green.

The orange area represents the range of outside temperatures and humidities prevailing in Central Europe. You can see that the outside temperatures and humidities usually do not match the conditions for comfort and that the room air needs to be air conditioned.

In Central Europe this is usually heating and humidification, whereas in the Tropics cooling and dehumidification is required.

For full air conditioning there are four partial functions:

- heating
- cooling
- humidifying
- dehumidifying

Air humidity

Humid air contains water in a vaporous state. A difference is made between absolute humidity and relative humidity. Absolute humidity is measured in g H2O/kg dry air.

For air conditioning the relative humidity is more important. It is perceived by humans. Relative humidity is measured in % of the maximum possible humidity at a given temperature. 100 % r.h. means that the air cannot absorb any more humidity, it is saturated. Excessive humidity then remains as a liquid (mist) in the air. The saturation curve is the lower limit curve in the h-x diagram.

Basic processes of air conditioning

The basic processes of air conditioning can be exceptionally well represented in the h-x diagram.

A change of temperature at constant absolute humidity also always results in a change of the relative humidity and enthalpy. The relative humidity and enthalpy also change with a change of the absolute humidity at constant temperature.

Thus temperature and relative humidity cannot be set independently of each other. An increase in the air temperature (heating), for example, always also results in a reduction in the relative humidity. To keep the relative humidity constant, humidification is therefore also required when heating. Conversely, the relative humidity increases during cooling.

Four basic processes of air conditioning in the h-x diagram

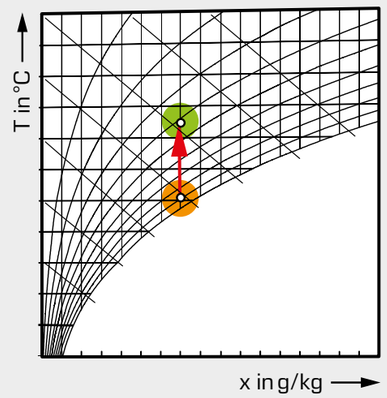

Heating

supply of heat, relative humidity reduces

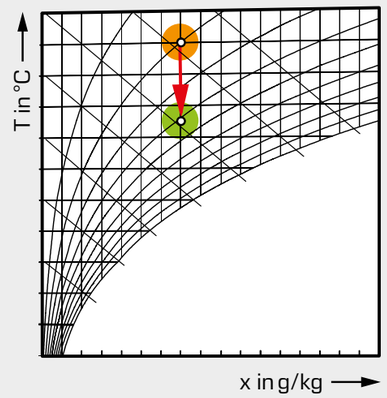

Cooling

removal of heat, relative humidity increases

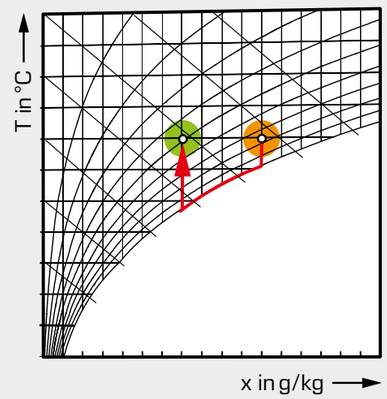

Dehumidifying

cooling to 100 % r.h. (saturation), condensation of the humidity on cold surfaces. Followed by heating to the desired temperature.

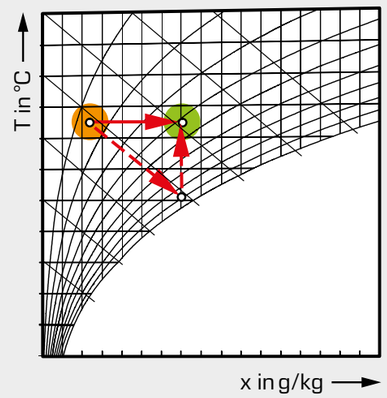

Humidifying

supply of water steam or water mist (for mist additional heating required to compensate cooling due to vaporisation enthalpy 1-1'-2)

Basic knowledge

Setup of an air conditioning system

Simple full air conditioning system

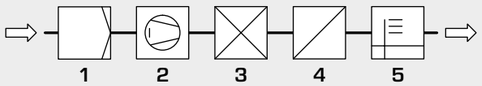

A full air conditioning system consists in its most simple form of the following components:

1 air filter: removes dust and dirt from the air
2 fan: aspirates the air and transports it through the system
3 air cooler: cools and dehumidifies the air
4 air heater: heats the air and compensates for the temperature loss during humidification and dehumidification
5 air humidifier: adds humidity to the air

Real air conditioning systems are usually more complex in design. To save energy, the waste air from the room can be returned to the room after processing. This is called recirculating operation. The ratio of recirculating air and outer air is controlled by throttle valves or flaps. In the diagram shown below the air cooler is supplied with cold water from a water chiller. Steam humidifier and air heater are heated electrically.

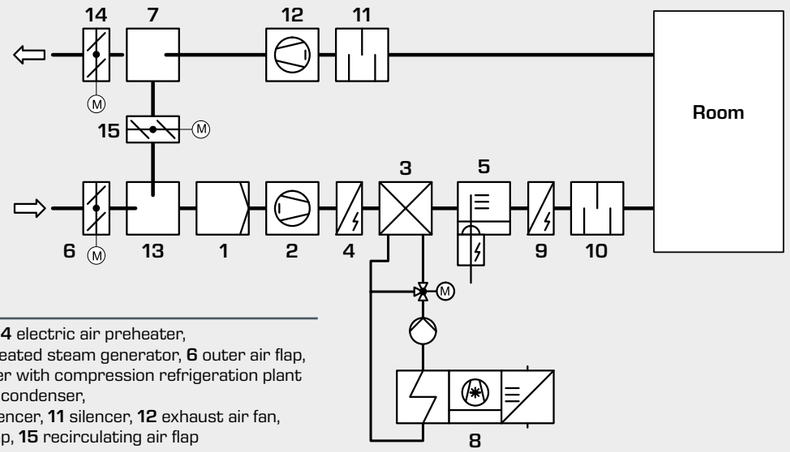

Complex air conditioning system with recirculating operation

1 air filter, **2** air inlet fan, **3** air cooler, **4** electric air preheater, **5** steam humidifier with electrically heated steam generator, **6** outer air flap, **7** distribution chamber, **8** water chiller with compression refrigeration plant in block construction with air-cooled condenser, **9** electric air reheater, **10** inlet air silencer, **11** silencer, **12** exhaust air fan, **13** mixing chamber, **14** exhaust air flap, **15** recirculating air flap

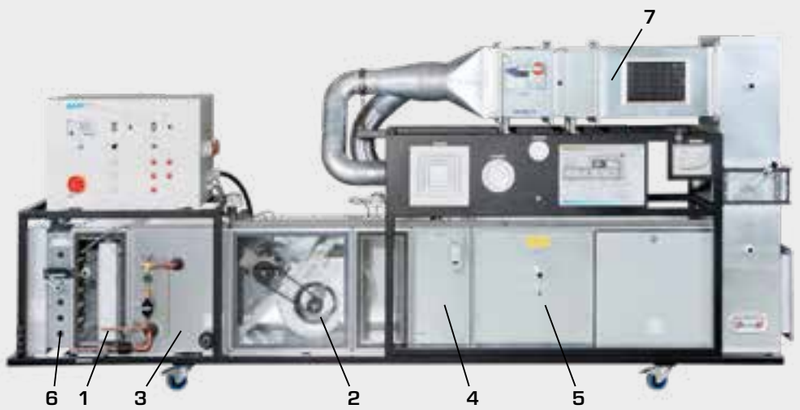

ET 620 Air conditioning and ventilation system

1 air filter,
2 fan,
3 air cooler,
4 air heater,
5 humidification chamber,
6 ventilation flap,
7 distribution system with flaps and outlets

Air cooler

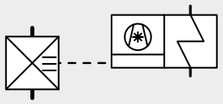

- **direct evaporator of a compression refrigeration system**

  Advantage:
  simple and cheapdesign

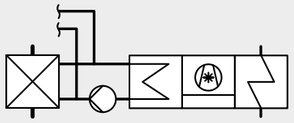

- **cold water circuit with compression refrigeration system**

  Advantage:
  several coolers can be operated via one refrigeration system

Direct evaporator as air cooler

Air heater

- **electric air heater**

  Advantage:
  simple design, easy to control

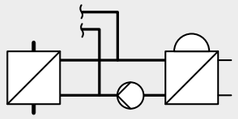

- **hot water circuit with boiler**

  Advantage:
  all fuels and heat sources possible, several air heaters can be connected to one heat source

Electric air heater

Air humidifier

- **steam humidifier**

  Advantage:
  no cooling by condensation, hygienic

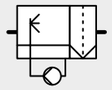

- **spray humidifier with mist collector**

  Advantage:
  can also operate as air cooler

Steam humidifier

An example from practice: industrial air conditioning system with comprehensive filters for clean room production

ET 620
Air conditioning and ventilation system

ET 620 is a real air conditioning system with connected air duct. The trainer consists of the main unit, a condensing unit and a steam humidifier. The conditioned air flows through an air duct and exits into the room through air outlets. Alternatively an external ductwork can also be connected.

Main unit

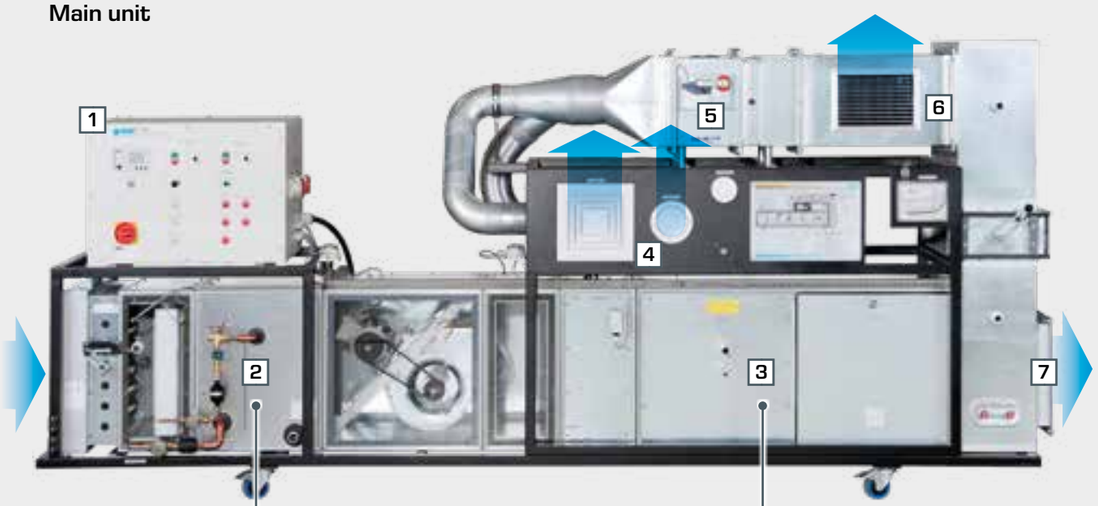

Condensing unit

Steam humidifier

1 switch cabinet with PLC, **2** cooler with connections for the condensing unit,
3 humidification section with connections for steam humidifier, **4**+**6** outlets for the conditioned room air,
5 fire protection flap, **7** standard connection for external ductwork

Real components from air conditioning technology

Control via PLC

The operation of the air conditioning system is via a PLC. Handling the different PLC functions is learned step by step:

- display of alarms
- display of measured values
- input of reference variables
- input of control parameters
- input of limit values

...and much more

Safety in air conditioning technology

A fire protection flap is fitted in the air duct. Fire protection flaps are used to separate the ventilation network from the source of a fire in an emergency. To trigger and close the fire protection flap a spring and a thermal trip element are used. In case of a fire, the solder melts, the two metal plates are released and the spring shuts the fire protection flap.

Fire protection flap

Trip element with intact solder joint

Trip element with melted solder joint

Typical air outlets

In order for people to find the room climate comfortable, a strong draught must be avoided.

The air duct of ET 620 features different types of air outlets. The purpose of air outlets is the distribution of the air in the room with a minimum air velocity. Air distribution, air velocity and pressure loss of the different air outlets can be compared.

Ventilation grill

Ceiling vent (left) and disc valve (right)

ET 620
Air conditioning and ventilation system

Description

- **complete air conditioning and ventilation system for laboratory operation**
- **high practical relevance due to real dimensions and use of commercial components**
- **manual or automatic operation by PLC air conditioning controller**
- **connection of an external air duct system possible**

The experimental setup represents a real air conditioning and ventilation system. The system capacity is sufficient to climatise a laboratory room.

The air conditioning and ventilation system includes a filter element, a fan with controlled speed, a direct evaporator as air cooler, an electric air heater and humidification by steam humidifier. The following functions are possible: heating / cooling and humdifiying / dehumidifying. For this purpose the active components can be run either manually individually or via a central PLC air conditioning controller in automatic operation. The air conditioning controller controls the temperature and air humidity independent of each other. Via time programs, operation is possible dependent on the time of the day or the day of the week, as in reality. Pressure losses can be measured at each section of the duct.

All common components, such as filter, air heater / air cooler, outlets, smoke detector, multi-leaf dampers, inspection and fire protection flaps are available and can be explained. A standard connection piece in the air duct enables the connection to an external air duct system to climatise an existing room.

The air conditioning and ventilation system consists of three independent system components: main unit, steam humidifier and condensing unit. The connection is performed via hoses. Due to the waste heat the condensing unit should not be placed inside the room to be climatised.

Learning objectives/experiments

- practice-oriented principles of air conditioning and ventilation technology
- design and servicing of an air conditioning and ventilation system
- principles of room air conditioning (h-x diagram)
- explanation of components: filter, air heater, air cooler, humidifier, condensing unit, air conditioning controller, flaps, outlets
- operation of safety devices
- measurement of pressure curve and pressure losses
- effect of air cooler, air heater and humidifier on the state of the air at the outlet
- investigation of the control behaviour of an automatic air conditioning controller, determination of limiting factors

ET 620
Air conditioning and ventilation system

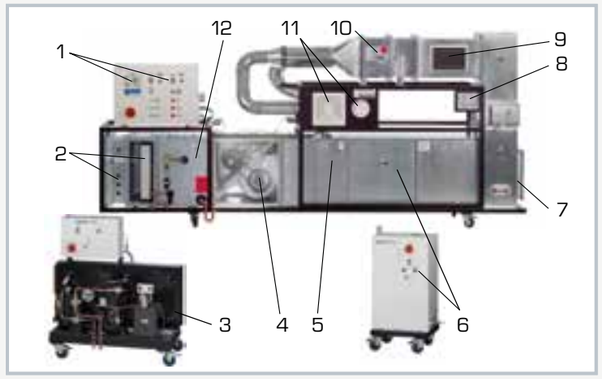

1 switch cabinet with controller, 2 air inlet with filter, 3 condensing unit, 4 fan, 5 air heater, 6 steam humidifier, 7 standard connector to connect an external air duct system, 8 inclined tube manometer, 9 ventilation grille with volume adjustment, 10 smoke detector, 11 fire protection flap, 12 ceiling vents, 13 air cooler (direct evaporator)

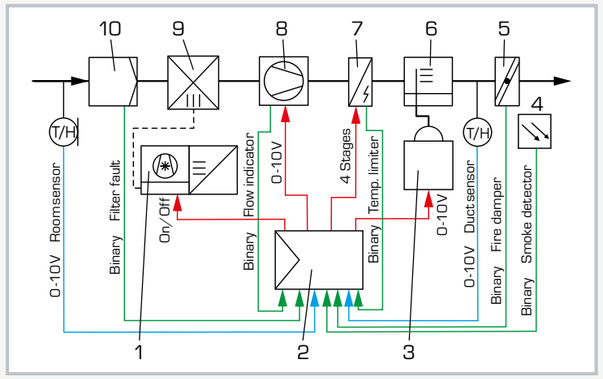

Control schematic: 1 condensing unit, 2 controller, 3 steam humidifier, 4 smoke detector, 5 fire protection flap, 6 humidification section, 7 electric air heater, 8 fan, 9 air cooler (direct evaporator), 10 filter; T/H temperature/humidity

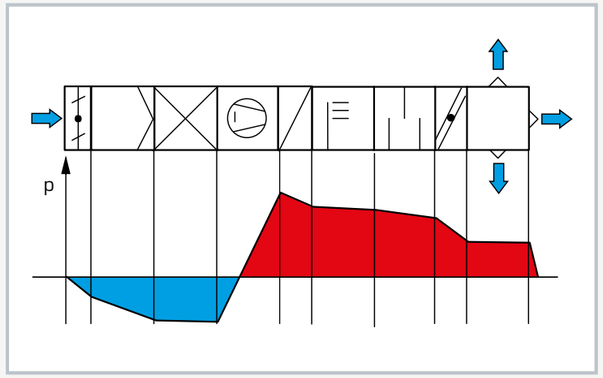

Pressure curve in the system

Specification

[1] practice-oriented air conditioning and ventilation system with 3 independent system components: main unit, condensing unit, steam generator
[2] manual or automatic operation via PLC air conditioning controller
[3] main unit with air duct, fan, air conditioning system
[4] air conditioning system with direct evaporator as air cooler, electric air heater, humidification
[5] hoses connect direct evaporator to condensing unit, humidification system to steam humidifier
[6] air duct from hot galvanised sheet with sight window and pressure measurement connections to record pressure curves
[7] air duct with filter, multi-leaf damper, ceiling vent, protective grating, ventilation grille, fire protection flap, inspection flap, sound insulation link, smoke detector
[8] standard connection piece to connect to external ventilation system
[9] refrigerant R404a, CFC-free

Technical data

Fan, speed-controlled 0...1500min^{-1}
- max. volumetric air flow rate: 2500m^3/h
- max. pressure level: 715Pa
- drive motor power: 1,1kW

Air heater, 4 stages: 0-5-10-15-20kW
Air cooler (direct evaporator), cooling capacity: 27kW
Condensing unit
- rated cooling capacity: approx. 16,6kW at 7.2/32°C
- power consumption: approx. 7,4kW at 7.2/32°C

Steam humidifier
- steam capacity: 10kg/h
- power consumption: 7,5kW

External standard connection piece: 400x400mm
Duct cross-sections
- bottom: WxH: 630x630mm, top: WxH: 358x358mm

Inclined tube manometer: 0...750Pa

400V, 50Hz, 3 phases
400V, 60Hz, 3 phases; 230V, 60Hz, 3 phases
UL/CSA optional
LxWxH: 3870x850x1760mm; 540kg (trainer)
LxWxH: 1110x740x1120mm; 163kg (condensing unit)
LxWxH: 510x500x1060mm; 50kg (humidifier)

Required for operation

water connection, drain

Scope of delivery

1 trainer
1 condensing unit
1 steam humidifier
1 set of accessories
1 set of instructional material

ET 915 HSI training system refrigeration and air conditioning technology

The ET 915 HSI Training system refrigeration and air conditioning technology, base unit provides basic experiments for the different areas of refrigeration and air conditioning technology.

The term HSI refers to our overall didactic concept: **H**ardware – **S**oftware – **I**ntegrated.

Refrigeration

ET 915.01
Refrigerator model

ET 915.02
Model of a refrigeration system with refrigeration and freezing stage

Air conditioning

ET 915.06
Model of a simple air conditioning system

ET 915.07
Air conditioning model

All attachments contain expansion elements and evaporators

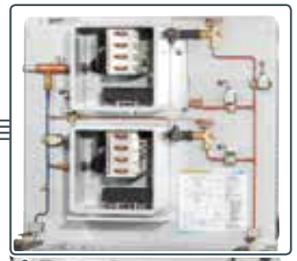

The ET 915 base unit contains the main compressor and condenser components

Modular system with extensive teaching possibilities

Training software

...with didactically valuable course of studies

- use the training software on the students' own PCs
- complete course of studies for refrigeration and air-conditioning technology including quiz
- very flexible thanks to the structure of own learning modules and tests
- intuitive user interface

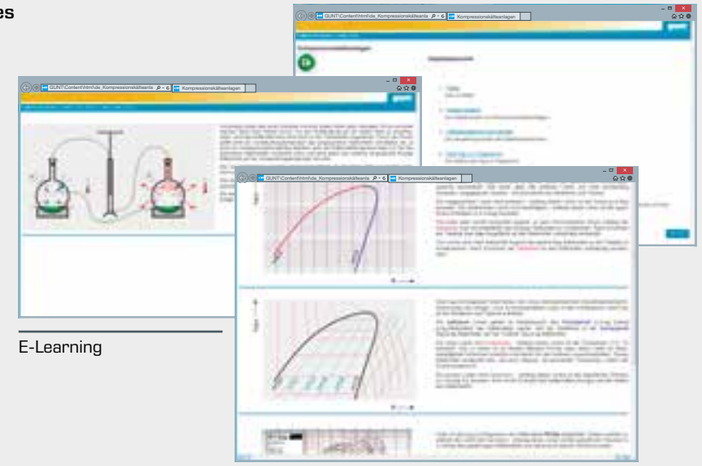

E-Learning

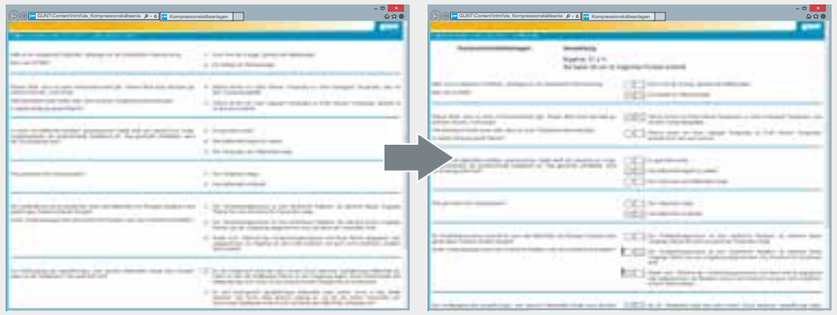

Quiz with detailed evaluation

Targeted review of the learning content

- learning progress can be monitored discretely and automatically
- detect weaknesses and provide targeted support

Data acquisition

...with unlimited networking capability

- interactive experiments for students via network connection
- real-time display of the processes in the log p-h diagram and h-x diagram
- plug & play system via USB connection

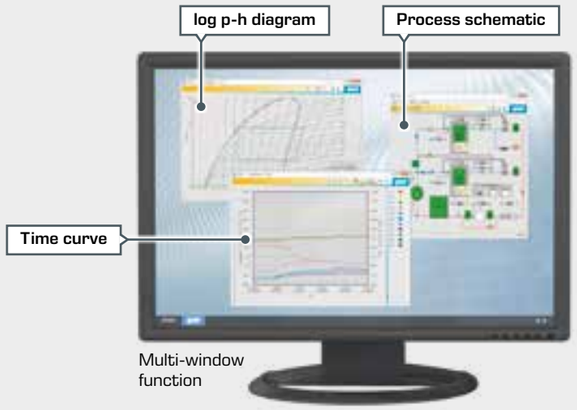

Multi-window function

ET 915.06
Model of a simple air conditioning system

Description

- **model of a simple air conditioning system for room cooling**
- **component operation and fault simulation via the GUNT software**

ET 915.06 is part of the HSI training system for refrigeration and air conditioning technology. In combination with the base unit ET 915 the operational model of a simple air conditioning system is created. The model is plugged onto the base unit, secured using fasteners and connected with refrigerant hoses to become a complete refrigeration circuit for the air cooler.

In systems for room cooling the air to be cooled is aspirated from the room by a fan, cooled and fed back into the room. This model demonstrates the principles of room cooling and the components of an air conditioning system.

The model ET 915.06 includes an air duct with transparent front, fan for air transport, an evaporator as air cooler and an expansion valve. All components are clearly arranged on a panel.

The individual components of the system, here the compressor and the fan, are operated via the software. The software offers the option to simulate faults.

The volumetric air flow rate is determined via a differential pressure measurement. Temperatures and humidity before and after the evaporator are recorded by sensors, digitised and dynamically represented in the software.

Fundamentals and individual components are represented in the educational software for ET 915.06. Performance assessments check the learning progress. With the aid of the authoring system further exercises and performance assessments can be created.

Learning objectives/experiments

- air conditioning system for room cooling and its main components
- principle of operation of an evaporator as air cooler
- fault simulation

ET 915.06
Model of a simple air conditioning system

1 evaporator as air cooler, 2 air duct, 3 temperature and humidity sensor, 4 process schematic, 5 connections for ET 915, 6 solenoid valve, 7 expansion valve, 8 radial fan, 9 differential pressure sensor

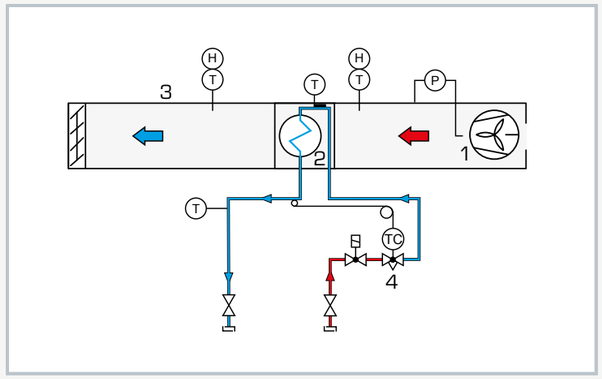

Process schematic of the simple air conditioning system model: 1 radial fan, 2 air cooler, 3 air duct, 4 expansion valve; T temperature, P pressure, H humidity; red arrow: hot, blue arrow: cold; blue: low pressure, red: high pressure

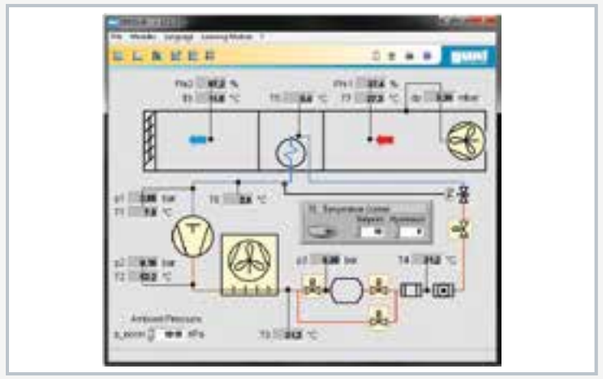

Software screenshot: process schematic

Specification

[1] model of a simple air conditioning system to plug onto the base unit ET 915
[2] GUNT training system with HSI technology
[3] air duct with transparent front
[4] evaporator as air cooler
[5] radial fan with throttle valve
[6] thermostatic expansion valve as expansion element
[7] sensors to record temperature, humidity and differential pressure for determining the volumetric air flow rate
[8] operation of individual components and of the system and fault simulation via software
[9] GUNT software with control functions and data acquisition via USB under Windows 7, 8.1, 10
[10] GUNT software: educational software, data acquisition, system operation

Technical data

Air duct: 136x136x435mm
Evaporator as air cooler
- transfer area: approx. 900cm^2

Radial fan
- max. power consumption: 80W
- max. flow rate: 255m^3/h

Measuring ranges
- temperature: 2x ±50°C, 2x 0...100°C
- differential pressure: 0...10mbar
- humidity: 2x 10...100% rel.

LxWxH: 970x370x600mm
Weight: approx. 35kg

Scope of delivery

1 model of a simple air conditioning system, filled with refrigerant
1 GUNT software CD + USB cable

ET 915.07
Air conditioning model

Description

- **complete model of a full air conditioning system**
- **heating, cooling, humidifying and dehumidifying**
- **outer air and recirculation operation possible**
- **component operation and fault simulation via the GUNT software**

ET 915.07 is part of the HSI training system for refrigeration and air conditioning technology. In combination with the base unit ET 915 the operational model of a full air conditioning system is created. The model is plugged onto the base unit, secured using fasteners and connected with refrigerant hoses to become a complete refrigeration circuit for the air cooler.

The room climate is created by the interaction of air temperature, heating temperature and air humidity. The purpose of room air conditioning is to shape the room climate in accordance with the requirements of people or sensitive goods. This model introduces the operation of an air conditioning system and the recirculating air and outer air operating modes.

The model ET 915.07 includes two air ducts with transparent front. The top air duct serves as climatic chamber whilst the bottom air duct contains the air cooler, two electric air heaters and a steam humidifier. A fan between the two air ducts recirculates the air. A motorised butterfly valve in the top air duct allows a change between outer air and recirculating operation. Dependent on the switching of the two air heaters, the air cooler and the humidifier, the air in the duct system can be cooled, heated, humidified or dehumidified.

The individual system components are operated via the GUNT software. Temperature and humidity before and after the evaporator and in the climatic chamber are recorded by sensors, digitised and represented dynamically in the software. The conditioning of the air can be monitored online in the h-x diagram.

Fundamentals and individual components are represented in the educational software for ET 915.07. Performance assessments check the learning progress. With the aid of the authoring system further exercises and performance assessments can be created.

Learning objectives/experiments

- full air conditioning system and its main components
- heating and cooling in the h-x diagram
- humidifying and dehumidifying in the h-x diagram
- outer air and recirculating operation
- fault simulation

ET 915.07
Air conditioning model

1 air duct, 2 air reheater, 3 process schematic, 4 air humidifier, 5 connections for ET 915, 6 evaporator, 7 expansion valve, 8 air preheater, 9 fan, 10 sensors for humidity and temperature, 11 ventilation flap

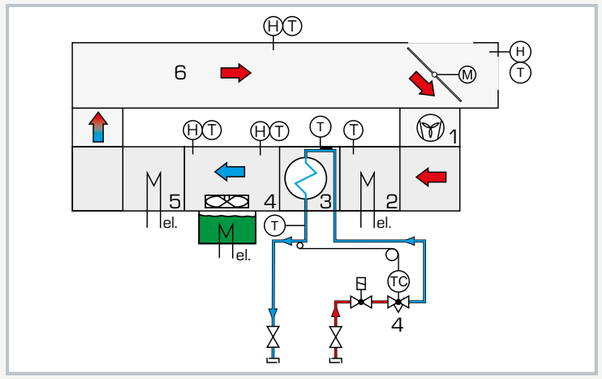

Air conditioning with recirculating operation:
1 fan, 2 air preheater, 3 air cooler, 4 air humidifier, 5 air reheater, 6 air duct, 7 ventilation flap with servomotor, 8 expansion valve; T temperature, P pressure, H humidity; red arrow: hot, blue arrow: cold; blue: low pressure, red: high pressure

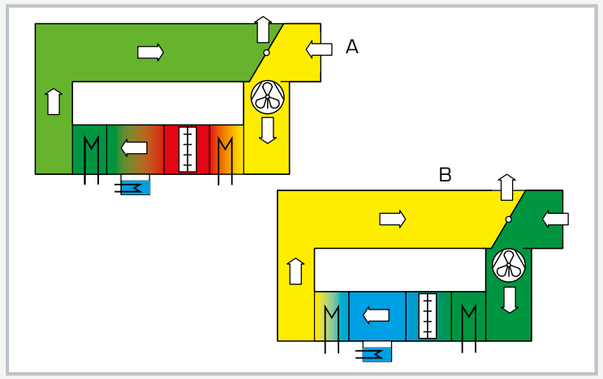

Air conditioning with outer air operation; A: humidification, B: dehumidification; yellow: dry, green: humid, blue: cooling, red: heating

Specification

[1] model of an air conditioning system to plug onto the base unit ET 915
[2] GUNT training system with HSI technology
[3] air duct with transparent front and adjustable ventilation flap for recirculating or outer air operation
[4] evaporator as air cooler
[5] 2 heaters as air preheater and reheater
[6] air humidifier with float switch, fan, filling level indication
[7] thermostatic expansion valve as expansion element
[8] sensor to record temperature and combined sensor for humidity and temperature
[9] operation of individual components and of the system and fault simulation via software
[10] GUNT software with control functions and data acquisition via USB under Windows 7, 8.1, 10
[11] GUNT software: educational software, data acquisition, system operation

Technical data

Air duct, top: 136x136x800mm
Evaporator as air cooler
- transfer area: approx. 900cm^2

Air heater:
- 2x 250W

Axial fan
- max. power consumption: 20W
- max. flow rate: 160m^3/h

Humidifier
- heater: 200W

Measuring ranges
- temperature: 2x -50...50°C, 5x 0...50°C
- humidity: 4x 10...100% r.h.

LxWxH: 850x400x680mm
Weight: approx. 51kg

Scope of delivery

1 air conditioning system model, filled with refrigerant
1 narrow mouth bottle
1 GUNT software CD + USB cable

ET 605 Air conditioning system model plus automation solutions

A practical air conditioning system model with all elements and functions

The principles of air conditioning technology can be taught optimally with the model ET 605. The air conditioning system consists of an air duct with transparent front and a climatic chamber with two different cooling loads. The overall design of the system is guided by instructional and methodological aspects and thereby supports the learning process.

The main functions of the system – cooling, heating, humidifying, air transport – are activated or deactivated via switches. Recirculating and outer air operation are possible. All relevant measuring data can be read on digital displays.

An important extension of the teaching objectives is provided by the option to extend the system with different additions into a fully automated system.

The software solution: clear and versatile

ET 605.01 Software controller with data acquisition

Data acquisition and visualisation, control and operation in a single software solution.

This solution is recommended if the focus is on instructional and methodological criteria. Compared to an industrial controller the software offers an attractive and very clear representation of the air conditioning process.

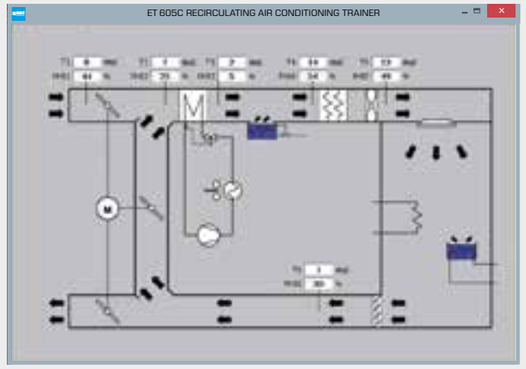

The industrial solution

ET 605.02 Air conditioning controller

This automation solution is recommended if the training objective focuses on the exact familiarisation with an industrial air conditioning controller. The controller matched to the ET 605 system offers a wide functional spectrum and a graphical display. Dependent on the desired temperature and humidity in the climatic chamber it controls the components.

The right tool for implementing your own ideas

ET 605.03 I/O connection box

This solution is recommended if the focus is on the topic of automation and own solutions are to be created. The connection box provides all relevant input and output signals which the user can further process according to his own requirements and ideas. The connection of any industrial air conditioning controller or independently written software are possible.

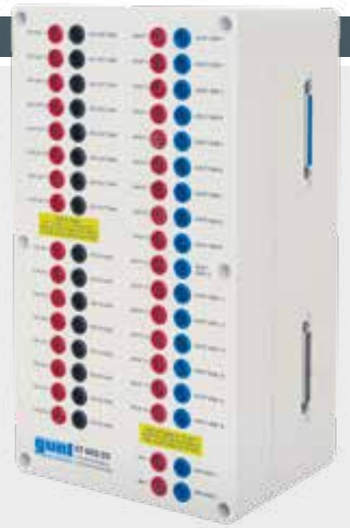

ET 605
Air conditioning system model

Description

- **climatic chamber with latent and sensitive heat source as cooling load**
- **recirculating and outer air operation**
- **optional data acquisition software (ET 605.01)**
- **connection options for the use of different automation solutions**

Air conditioning technology is a key topic in building services engineering. For this reason air conditioning technology plays an important role during the training of skilled workers and engineers.

The clear trainer ET 605 represents a complete air conditioning system with an air duct and a climatic chamber. The main components of the air conditioning system are the air cooler with condensing unit, fan, steam humidifier and air heater. Three motorised ventilation flaps control the air distribution in the air conditioning system. The climatic chamber is equipped with two different heat sources (wet and dry). Temperature and relative humidity are measured at relevant points in the air duct and displayed digitally. For the refrigeration circuit two manometers with integrated temperature scale and a flow meter provide all relevant measurements.

ET 605 is operated manually. A key feature of the air conditioning system is that it is fully ready for various automation solutions. The user can thus focus on this important topic during a lesson. The following solutions are available:

- software controller ET 605.01
- industrial air conditioning controller ET 605.02
- signal connection box ET 605.03 for the integration of an individual user solution.

Learning objectives/experiments

- air conditioning system and its components
- conditioning room air
- mixing different air flows
- representation in the h-x diagram for humid air
  - humidification and dehumidification
  - heating and cooling
- representation of the circuit in the log p-h diagram
- effect of a cooling load (dry and wet)
- recirculating and outer air operation In conjunction with optional accessories
- automation in an air conditioning system

ET 605
Air conditioning system model

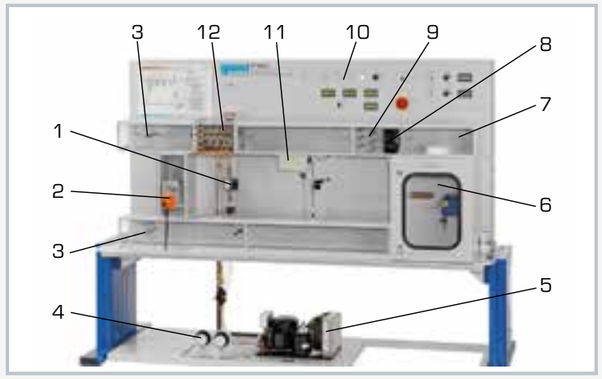

1 refrigerant flow meter, 2 servomotor, 3 ventilation flap, 4 refrigerant manometer, 5 condensing unit, 6 climatic chamber with sensitive and latent heat source, 7 air duct with temperature/humidity sensor, 8 fan, 9 air heater, 10 displays and controls, 11 humidifier, 12 air cooler

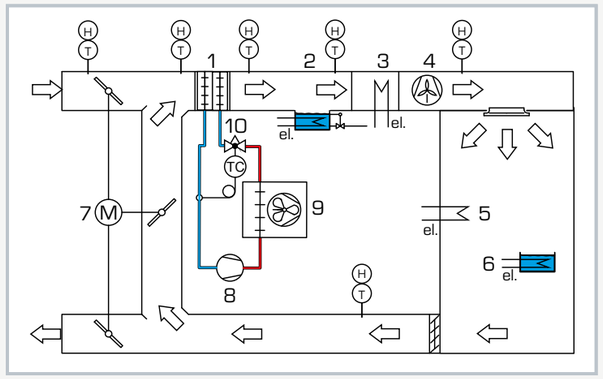

1 air cooler, 2 humidifier, 3 air heater, 4 fan, 5 sensitive heat source, 6 latent heat source, 7 servomotor for ventilation flaps, 8 compressor, 9 condenser, 10 expansion valve; T temperature, H humidity

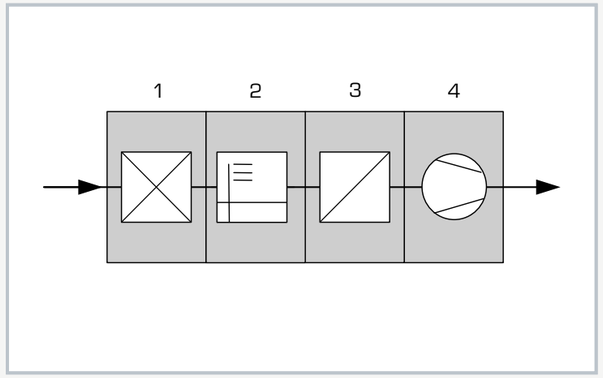

Schematic setup of the air conditioning system in accordance with DIN 1946
1 air cooler, 2 air humidifier, 3 air heater, 4 fan

Specification

[1] model of an air conditioning system with outer air and recirculating operation
[2] air duct with transparent front
[3] air duct with fan, air cooler, humidifier, flaps, air heater and sensors
[4] chamber with wet (latent) and dry (sensitive) heat source as cooling load
[5] motorised flaps for recirculating and outer air operation
[6] process schematic with signal lamps
[7] air conditioning system ready for different automation solutions: 4 data cable connections to integrate the accessories
[8] refrigerant R134a, CFC-free

Technical data

Air-cooled condensing unit
- power consumption: 140W at -10°C
- refrigeration capacity: 320W at +5/40°C

Humidifier
- heating power: 400W

Air heater
- heating power: 360W

2 heaters in the chamber as cooling load
- power output: 0...250W each, freely adjustable

Flow cross-section of the air duct
- WxH: 155x155mm

Measuring ranges
- temperature: 0...50°C
- rel. humidity: 10...90%
- power consumption: 0...600W (condensing unit)
- power: 2x 0...300W (cooling load)
- pressure: -1...9bar / -1...24bar (refrigerant)
- Dflow rate: 1,5...23,5L/h (refrigerant)
- air velocity: 0...2,5m/s

230V, 50Hz, 1 phase
230V, 60Hz, 1 phase
230V, 60Hz, 3 phases
UL/CSA optional
LxWxH: 2210x800x1740mm
Weight: approx. 280kg

Required for operation

water connection, drain

Scope of delivery

1 trainer, filled with refrigerant
1 set of instructional material

GUNT-RHLine Renewable Heat
Solar thermal energy and heat pump modular system

The HL 320 modular system allows you to investigate heating systems with various renewable and traditional energy sources. Solar thermal energy can be combined with heat generation from heat pumps. The modular design of the HL 320 system makes it possible to achieve different combinations and configurations.

Combined use of renewable heat sources

Doing away with a conventional heating system represents a genuine alternative for modern residential buildings with good thermal insulation in many cases. The combination of solar thermal collectors with a heat pump very often guarantees significant savings with reliable year-round supply.

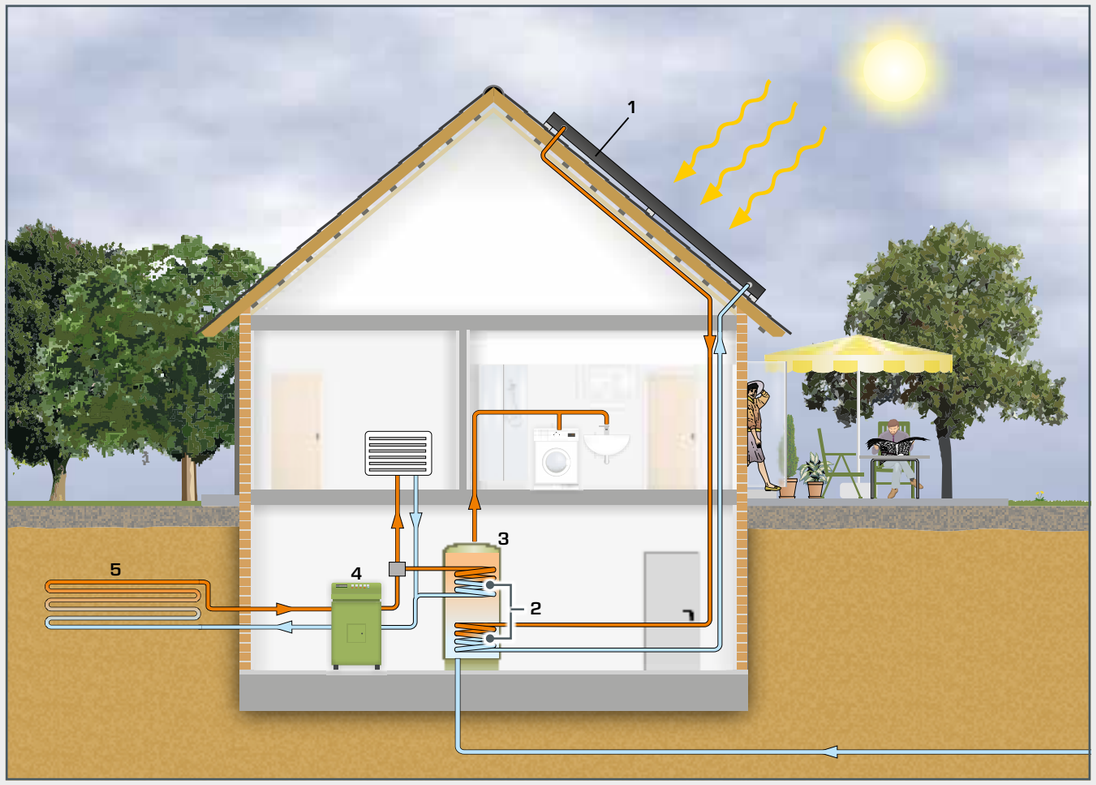

1 flat collector, **2** heat exchanger, **3** hot water storage tank, **4** heat pump, **5** geothermal energy absorber;
hot heat transfer fluid,
cold heat transfer fluid,
refridgerant, high pressure,
refridgerant, low pressure

HL 320.01
Heat pump

HL 320.02
Conventional heating

HL 320.03
Flat collector

HL 320.04
Evacuated tube collector

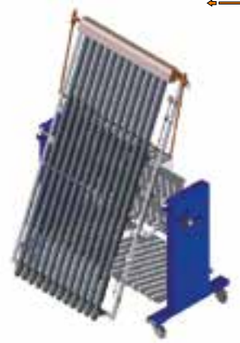

HL 320.05
Central storage module with controller

The storage module provides bivalent storage and buffer storage. The controller can be used to log measured values over longer periods for analysis of the system behaviour.

Freely programmable controller with extensive software

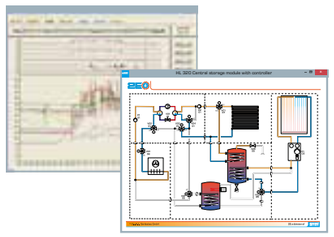

HL 320.07
Underfloor heating / geothermal energy absorber

HL 320.08
Fan heater / air heat exchanger

The HL 320.07 and HL 320.08 modules can be used as heat sources or as heat sinks.

GUNT-RHLine Renewable Heat
Solar thermal energy and heat pump modular system

The right configuration for every application

In heating technology, both correct composition of necessary components and optimisation of cabling and controller settings depend on the local conditions. GUNT has developed experiments for a selection of relevant module combinations in order to be able to teach the corresponding learning content in balanced steps. In addition, you may of course create your own system configurations to investigate further issues from the field of regenerative heating technology.

- hot heat transfer fluid,
- cold heat transfer fluid,
- refridgerant, high pressure,
- refridgerant, low pressure

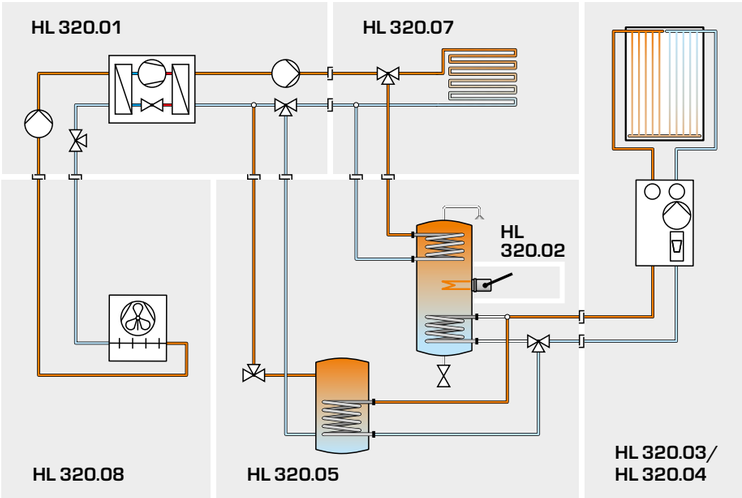

Example for a system diagram for complementary heating and domestic water heating with a solar thermal collector and a heat pump (combination 5).

HL 320.08 | HL 320.01 | HL 320.07 | HL 320.05 | HL 320.04

Recommended combinations for the HL 320 modular system

Combination	1	2	3	4	5
HL 320.01 Heat pump			■	■	■
HL 320.02 Conventional heating		■			■
HL 320.03 Flat collector	■	■		■	■
HL 320.04 Evacuated tube collector	■	■		■	■
HL 320.05 Central storage module with controller	■	■		■	■
HL 320.07 Underfloor heating / geothermal energy absorber		■	■	■	■
HL 320.08 Fan heater / air heat exchanger			■	■	■

Learning objectives and experiments

Combination 1
- function of a solar thermal heating system
- commissioning
- collector efficiency and losses

Combination 2
- combined use of traditional and solar thermal energy
- efficient indoor heating with underfloor heating

Combination 3
- function and design of a heat pump
- parameterisation of a heat pump controller
- factors influencing the COP (Coefficient of Performance)

Combination 4
- efficient use of solar thermal and geothermal energy
- strategies for heat supply in various consumption profiles

Combination 5
- use of renewable and fossil fuels for heating and hot water
- bivalent parallel and bivalent alternative heat pump mode

GUNT-RHLine Renewable Heat
Solar thermal energy and heat pump modular system

HL 320.01 Heat pump

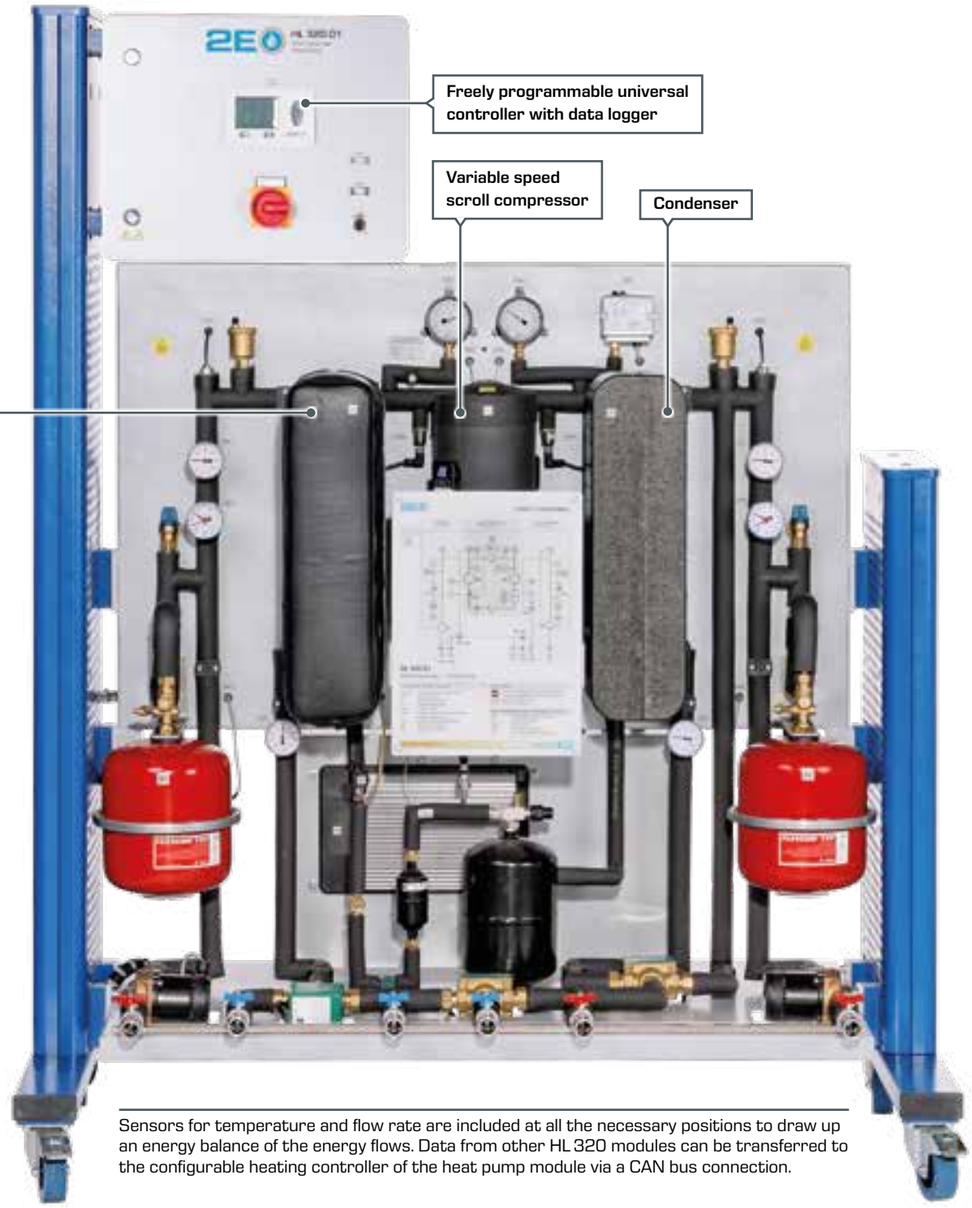

Sensors for temperature and flow rate are included at all the necessary positions to draw up an energy balance of the energy flows. Data from other HL 320 modules can be transferred to the configurable heating controller of the heat pump module via a CAN bus connection.

The HL 320.01 Heat pump is part of the HL 320 modular system and provides you with a variety of combination options from geothermal and solar thermal energy in a modern heating system. The heat pump is driven by a variable speed scroll compressor.

This means it is possible to adapt the heating power of the heat pump to the current heating system demand.

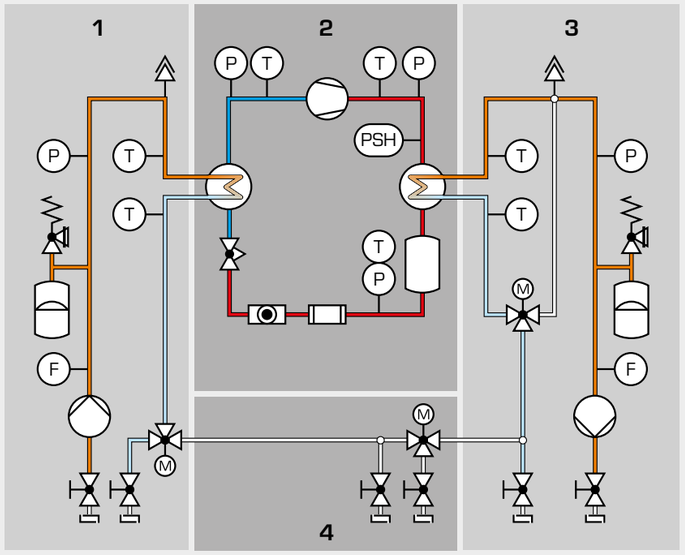

Process schematic of the HL 320.01 Heat pump module

1 source circuit connections, **2** refrigeration circuit, **3** heating circuit connections, **4** additional options for including HL 320 modules;
hot heat transfer fluid,
cold heat transfer fluid,
refridgerant, high pressure,
refridgerant, low pressure

Fixed and movable spirals of a scroll compressor

In combination 3 of the HL 320 system, the following modules are combined to create one system:

- HL 320.01 Heat pump
- HL 320.07 Underfloor heating/geothermal energy absorber
- HL 320.08 Fan heater/air heat exchanger

This combination allows fundamental experiments on the operating behaviour of the heat pump. For more detailed experiments a storage module (HL 320.05) and a thermal solar collector, for example, can be connected.

Learning objectives

- function and design of a heat pump
- distinguishing different operating conditions
- factors influencing the COP (coefficient of performance)
- parameterisation of a heat pump controller

GUNT-RHLine Renewable Heat
Solar thermal energy and heat pump modular system

HL 320.02 Conventional heating

In heating systems using different renewable heat sources, it may be economically feasible to cover the peak demand by means of a conventional heater. In order to be able to investigate this aspect in the HL 320 modular system, the HL 320.02 module provides an additional heater that can easily be integrated into different system configurations.

The practical cost of operating this heater for your experiments remains low because an electrically operated heating element is used. The heating element is inserted into the storage tank of the HL 320.05 Central storage module and can be controlled by the storage module's controller via CAN bus. An integrated meter records the amount of electricity consumed. The data from this meter can be sent to the controller of the HL 320.05 Central storage module via the CAN bus connection for capture by a data logger.

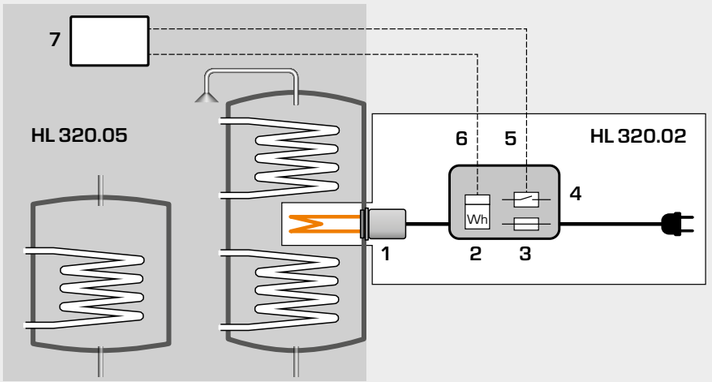

1 heating element, **2** energy meter, **3** fuse, **4** switch box,
5 connection between contactor and controller output,
6 connection between energy meter and controller input,
7 HL 320.05 module's controller

The storage tank is emptied in preparation for the experiment. The auxiliary heater can easily be inserted subsequently in just a few steps.

Learning objectives

- complementary heating and/or domestic water heating by conventional additional heater
- bivalence point and heating load
- control strategies for complementary heating

HL 320.03 Flat collector

In conjunction with other HL 320 modules, you can conduct experiments on solar thermal energy domestic water heating with the HL 320.03 Flat collector. The control engineering for the combined production of domestic hot water and heating is of particular practical relevance. Here, the system is controlled and data captured via CAN bus via the HL 320.05 Central storage module.

Modules are easily connected via hoses and quick-release couplings. Different combinations for renewable heat sources can be tested and optimised in conjunction with other modules from the HL 320 system.

Learning objectives

- determining the net power
- how temperature, illuminance and angle of incidence affect the collector efficiency
- integration of a flat collector in a modern heating system
- hydraulic and control engineering operating conditions
- energy balances
- optimisation of operating conditions for different types of use

GUNT-RHLine Renewable Heat
Solar thermal energy and heat pump modular system

HL 320.04 Evacuated tube collector

The HL 320.04 unit provides you with an evacuated tube collector in a modern design. Evacuated tube collectors reach much higher operating temperatures compared to simple flat collectors due to the lower thermal losses. In practice, evacuated tube collectors are used where there is limited floor space, for example. In the year-round heating operation, evacuated tube collectors enable the reduction of the seasonal demand on a conventional auxiliary heater. HL 320.04 is one of the modules from the HL 320 Solar thermal energy and heat pump modular system. The experiment module can be incorporated into the modular system in a variety of different ways. The module can be used both for generating heated domestic water and for the combined production of domestic hot water and for heating rooms. Pipe connections for the heat transfer fluid are easy to create and alter thanks to the quick-release couplings.

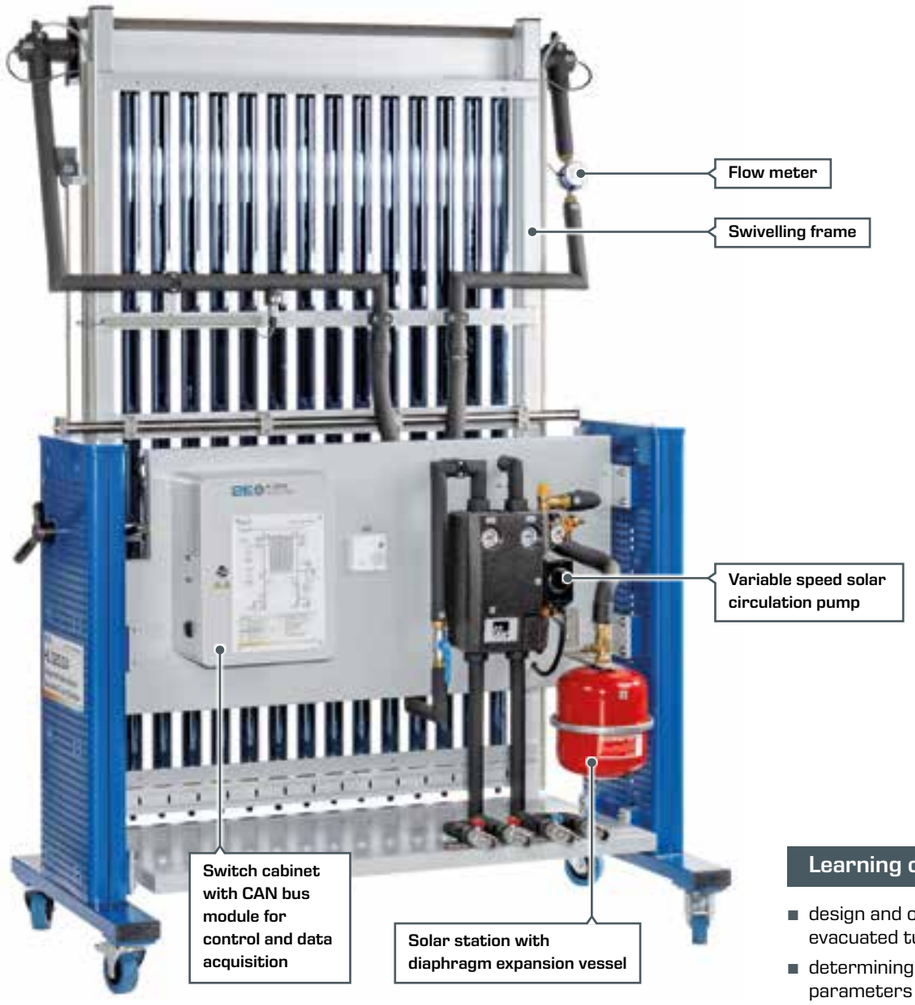

Learning objectives

- design and operation of an evacuated tube collector
- determining the net power and parameters affecting collector efficiency
- integration of an evacuated tube collector in a modern heating system

HL 320.05 Central storage module with controller

The HL 320.05 Central storage module with controller has been developed for your experiments as a central component of the HL 320 modular system. HL 320.05 contains two different heat storage systems, pipes, a pump, two motorised 3-way valves and safety devices. Quick-release couplings on the front of the module enable hydraulic connections to other modules in the modular system. In addition, HL 320.05 contains a freely-programmable heating controller, which is connected to the respective modules via control and data lines (CAN bus). This controller allows you to operate and study all intended module combinations.

Learning objectives

- fundamentals and commissioning of heating systems with solar thermal energy and heat pump
- properties of various heat storage methods
- electrical, hydraulic and control engineering operating conditions
- energy balances for different system configurations
- optimisation of control strategies for solar station with different operating modes

GUNT-RHLine Renewable Heat
Solar thermal energy and heat pump modular system

HL 320.07 Underfloor heating / geothermal energy absorber

Underfloor heating systems transfer heat through piping systems arranged in a spiral or winding pattern underneath the floor covering. Underfloor heating requires much lower feed flow temperature than conventional radiators. Besides its function as a heat sink when used as an underfloor heating system, HL 320.07 can also be used as a heat source for a heat pump in the HL 320 modular system. In this case, the direction of the heat transport is reversed. HL 320.07 is equipped with three separately selectable piping systems of different lengths. The pipes are surrounded by a tank which can be filled with water.

Sensors are mounted on the piping system to detect the temperatures in the feed and return. Heat quantities and energy balances can be calculated using these temperatures together with the measurement data from the integrated flow meter. Data is transferred to the controller of each main module (HL 320.01 or HL 320.05) via the CAN bus connection. The integrated 3-way mixing valve can also be controlled by the controller via the CAN bus connection.

Learning objectives

- energy balance in combined heating systems for domestic hot water generation and heating
- heat transfer in an underfloor heating system
- use of heat sources for heat pump systems

HL 320.08 Fan heater / air heat exchanger

When heating rooms, fan heaters offer the possibility of achieving a comparatively good transfer of heat to the room air compared to traditional heating radiators, even at small dimensions. When combined with a heat pump, the fan heater often represents a beneficial application both economically and in terms of energy, especially when renovating heating systems in old buildings. The HL 320.08 experiment module completes your HL 320 modular system. This module can also be operated as either a heat sink or a heat source for a heat pump. Sensors for temperature and flow rate are available to create energy balances. Data is transferred to the controller of each main module (HL 320.01 or HL 320.05) via the CAN bus connection.

Learning objectives

- how the temperature difference between the heating feed and return affects the overall efficiency of a heating system
- operating conditions when used as an air heat exchanger in a heat pump system
- comparison of an air heat exchanger with other heat sources in a heat pump system

HL 320.01
Heat pump

Description

- **trainer from the HL 320 modular system**
- **heat pump for operation with different sources**
- **multiple system variants possible in conjunction with other HL 320 modules**

The HL 320 modular system allows experiments on the generation, storage and use of heat from renewable energies. HL 320.01 is one module in this system and includes a heat pump that can be connected to different heat sources and consumers.

The heat pump comprises a compressor, a condenser, an expansion valve and an evaporator. These components are connected to each other via a refrigeration circuit. The refrigerant circulates in the refrigeration circuit powered by the compressor. A source's thermal energy is absorbed at the evaporator. Additional energy is added to the evaporated refrigerant in the compressor. This energy can be output to a consumer as heat.

On the HL 320.01 trainer, the condenser can be incorporated into a heating circuit consisting of various consumers. The evaporator can be connected to a source circuit with different heat sources. The pipes with quick quick-release couplings, circulation pumps and accessories necessary to create these connections are provided.

In practice and depending on the application, different system configurations are often required for optimal efficiency of a heating system. Using HL 320.01 and other HL 320 modules it is possible to systematically investigate the possible variants for incorporating a heat pump into a modern heating system.

Carefully structured instructional materials have been created for the recommended modular combinations with the HL 320.01 module. As part of the documentation for the HL 320 modular system, these materials set out the basic principles and provide a step-by-step guide through the experiments.

Learning objectives/experiments

- familiarisation with heat pump applications for heating rooms and hot water
- using the heat pump for cooling
- advantages and disadvantages of various system configurations (brine heat pump, air heat pump)
- configuring and adjusting a heat pump controller
- operating behaviour under varying heat supply and demand
- dependence of the coefficient of performance on source and sink temperature
- possibilities for optimising the seasonal performance factor

HL 320.01
Heat pump

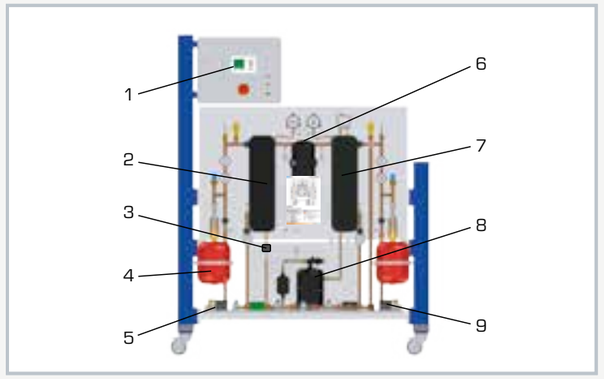

1 controller, 2 evaporator, 3 expansion valve, 4 expansion vessel, 5 pump source circuit, 6 scroll compressor, 7 condenser, 8 receiver, 9 pump heating circuit

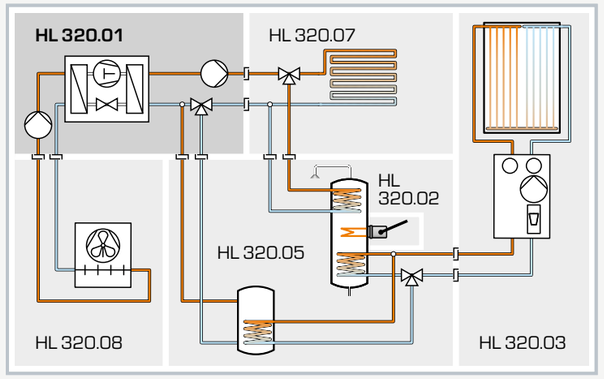

Inclusion of HL 320.01 in one possible configuration of the HL 320 modular system

	1	2	3	4	5
HL 320.01			x	x	x
HL 320.02		x			x
HL 320.03	x	x		x	x
HL 320.04	(x)	(x)		(x)	(x)
HL 320.05	x	x		x	x
HL 320.07		x	x	x	x
HL 320.08			x	x	x

Recomended combinations of the HL 320 modular system

Specification

[1] heat pump for the HL 320 modular system
[2] connections for various heat sources and sinks
[3] one circulation pump and one safety module each with expansion vessel for heating and source circuit
[4] sensors for temperature, flow rate and pressure with connection to the controller
[5] controller with data logger and LAN connection for acquisition of measurement data and for controlling the system
[6] software for transferring, displaying and evaluating the controller's measured data

Technical data

Heat pump
- heating capacity: approx. 2,3 kW at 5/65°C

Heating and source circuit pumps
- max. flow rate: $3m^3/h$
- max. head: 4m

Universal controller
- inputs: up to 16
- outputs: up to 16
- interfaces: DL bus, CAN, LAN

Measuring ranges
- temperature:
  - 4x -50...180°C
  - 3x 0...120°C
  - 1x -20...60°C
- flow rate: 2x 0,02...$1,5m^3/h$
- pressure:
  - 1x -1...15bar
  - 1x -1...49bar
  - 2x 0...6bar
  - 2x 0...50bar
  - 1x 0...18bar
  - 2x 0...10bar

230V, 50Hz, 1 phase
230V, 60Hz, 1 phase
LxWxH: 1500x800x1700mm
Weight: approx. 125kg

Required for operation

PC with Windows

Scope of delivery

1 trainer
1 manual

HL 320.02
Conventional heating

HL 320.02 heater installed in the bivalent storage tank of HL 320.05

Learning objectives/experiments

- complementary heating and/or domestic water heating by conventional additional heater
- bivalence point and heating load
- control strategies for complementary heating
- energy balances in conventionally supported solar thermal and heat pump systems

Description

- **complementary heater for the HL 320 modular system**
- **heater with electricity meter**
- **easy installation in HL 320.05 storage tank**

In heating systems using different renewable heat sources, it may be economically feasible to cover the peak demand by means of a conventional heater. In order to be able to investigate this aspect in the HL 320 modular system, the HL 320.02 module provides an additional heater that can easily be integrated into different system configurations.

The practicality of operating this heater in laboratory experiments is kept simple by using an electrically operated heater. The heater is inserted into the storage tank of the HL 320.05 storage module and can be controlled by the storage module's controller. An integrated meter records the amount of electricity consumed. The data from this meter can be sent to the controller of the HL 320.05 storage module via a suitable data cable, by means of the data logger.

Carefully structured instructional materials have been created for the recommended modular combinations with the HL 320.02 module. As part of the documentation for the HL 320 modular system, these materials set out the basic principles and provide a step-by-step guide through the experiments.

HL 320.02
Conventional heating

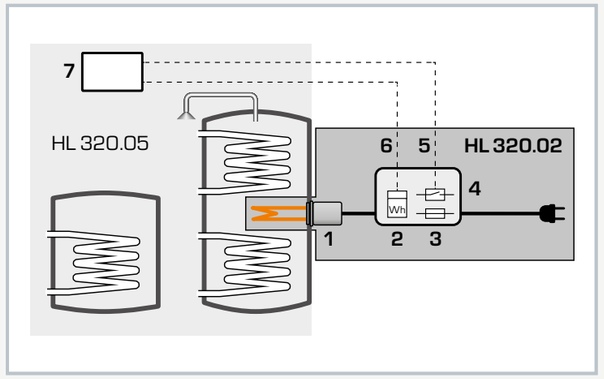

1 heater, 2 energy meter, 3 fuse, 4 control cabinet 5 connection between contactor and controller output, 6 connection between energy meter and controller input, 7 controller attached to module HL 320.05

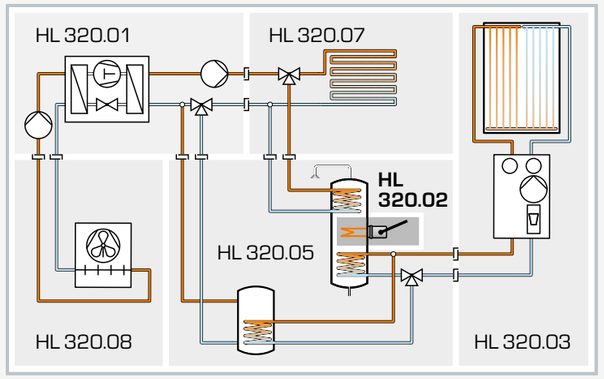

Inclusion of HL 320.02 in one possible configuration of the HL 320 modular system

	1	2	3	4	5
HL 320.01			X	X	X
HL 320.02		X			X
HL 320.03	X	X		X	X
HL 320.04	(X)	(X)		(X)	(X)
HL 320.05	X	X		X	X
HL 320.07		X	X	X	X
HL 320.08			X	X	X

Recomended combinations of the HL 320 modular system

Specification

[1] electrical heater for the HL 320 modular system
[2] control by means of the HL 320.05 module's controller
[3] control cabinet with power contactor, miniature circuit breaker and energy meter
[4] recording the amount of eenergy consumed by S0 connection to the HL 320.05 module's controller

Technical data

Heater
- electric output: 3kW
- thermostat: 30...110°C

Electricity meter
- voltage: 230VAC, 50Hz
- max. current: 32A
- S0 output: 1000Imp./kWh

230V, 50Hz, 1 phase
230V, 60Hz, 1 phase
Dxh: 115x370mm (heater)
Weight: approx. 2kg
LxWxH: 300x250x200mm (switch box)
Weight: approx. 1,5kg

Scope of delivery

1 heater
1 switch box
1 manual

HL 320.03
Flat collector

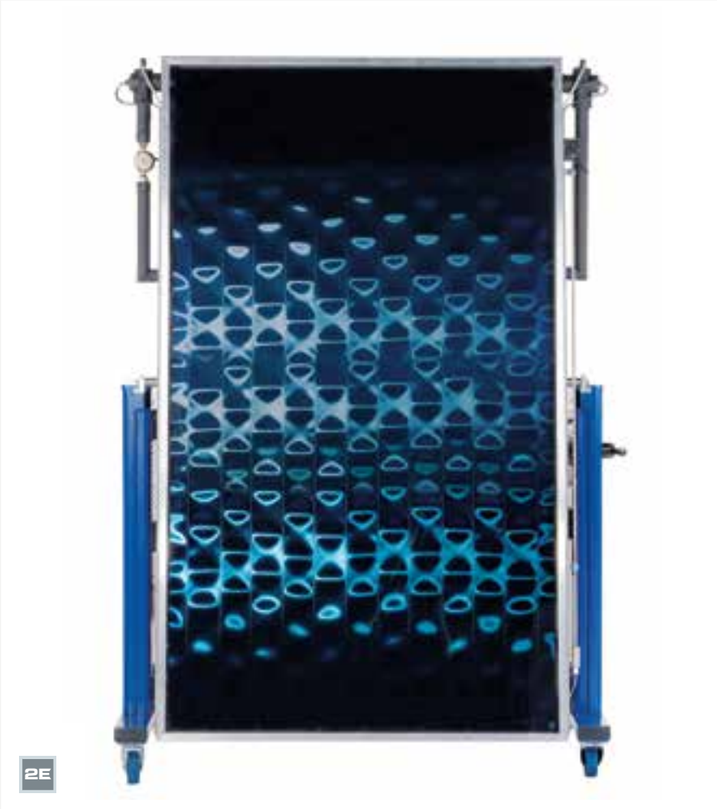

Learning objectives/experiments

- layout and function of the flat collector
- determining the net power
- how temperature, illuminance and angle of incidence affect the collector efficiency
- integration of a flat collector in a modern heating system
- hydraulic and control engineering operating conditions
- energy balances
- optimisation of operating conditions for different types of use

Description

- **pivotable flat collector for converting solar energy into heat**
- **heat source with connections for the HL 320 modular system**
- **components for operational and system reliability from real-world modern heating technology**
- **suitable for sunlight and artificial light**

HL 320.03 is one of the modules from the HL 320 modular system and allows you to convert solar energy into heat using a modern flat collector.

HL 320.03 can be incorporated into the HL 320 modular system in a variety of different ways. The trainer can be used both for generating heated domestic water and for the combined production of domestic hot water and for heating rooms.

Modules are connected rapidly and easily via hoses and quick-release couplings.

Different combinations for renewable heat sources can be tested and optimised in conjunction with other modules from the HL 320 system.

Carefully structured instructional materials have been created for the intended modular combinations with the HL 320.03 module. As part of the documentation for the HL 320 modular system, these materials set out the basic principles and provide a step-by-step guide through the experiments.

HL 320.03
Flat collector

1 vent valves, 2 lighting sensor, 3 flow sensor, 4 thermometer collector outlet, 5 shut-off valve, 6 connectors for warm water, 7 connectors for cold water, 8 diaphragm expansion vessel, 9 circulation pump, 10 pressure relief valve, 11 pressure sensor, 12 temperature sensor

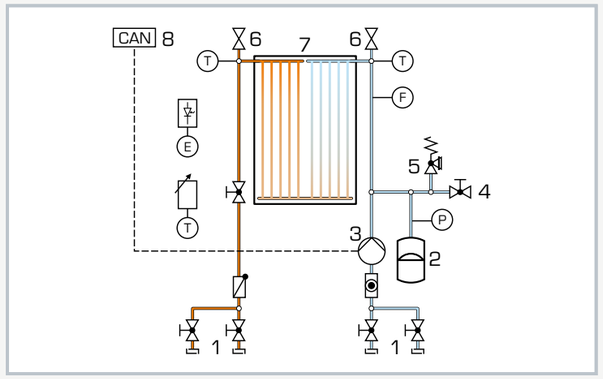

1 connections for heat transfer pipes with shut-off valves and quick-release coupling, 2 diaphragm expansion vessel, 3 pump, 4 fill valve, 5 pressure relief valve, 6 bleed valves, 7 flat collector, 8 CAN bus;
E illuminance, F flow rate, T temperature, P pressure

	1	2	3	4	5
HL 320.01			X	X	X
HL 320.02		X			X
HL 320.03	X	X		X	X
HL 320.04	(X)	(X)		(X)	(X)
HL 320.05	X	X		X	X
HL 320.07		X	X	X	X
HL 320.08			X	X	X

Recomended combinations of the HL 320 modular system

Specification

[1] trainer for the HL 320 modular system for the investigation of functional and operational behaviour of a flat collector
[2] solar thermal flat collector with selectively absorbing coating
[3] adjustable collector tilt angle
[4] solar circulation station with pump, expansion tank and safety valve
[5] measurement instruments and controls by HL320.05
[6] operation with solar radiation or HL 313.01 artificial light source

Technical data

Collector
- absorbing surface: 2.5m^2
- rated throughput: 40...150L/h
- operating pressure: 1...3bar

Solar circuit station
- solar pump: 3-stage
- safety valve: 4bar
- balancing valve: 1...13L/min

Measuring ranges
- temperature:
  - 2x 0...160°C
  - 3x -50°C...180°C
- flow rate: 30...1000l/h
- pressure: 0...6bar

230V, 50Hz, 1 phase
230V, 60Hz, 1 phase
LxWxH: 1660x800x2300mm
Weight: approx. 220kg

Scope of delivery

1 trainer
1 manual

HL 320.04
Evacuated tube collector

Learning objectives/experiments

- design and operation of the evacuated tube collector
- determining the net power
- parameters affecting collector efficiency
- integration of an evacuated tube collector in a modern heating system
- hydraulic and control engineering operating conditions
- creating energy balances
- optimisation of operating conditions for different types of use

Description

- **conversion of solar energy into heat in the evacuated tube collector**
- **pivotable collector with connections for the HL 320 modular system**
- **components for operational and system reliability from real-world modern heating technology**
- **suitable for sunlight and artificial light**

The HL 320.04 trainer contains a modern evacuated tube collector and allows you to convert solar energy into heat. Evacuated tube collectors reach much higher operating temperatures compared to simple flat collectors due to the lower thermal losses.

HL 320.04 is one of the modules from the HL 320 Solar thermal energy and heat pump modular system. The trainer can be incorporated into the modular system in a variety of different ways. The trainer can be used both for generating heated domestic water and for the combined production of domestic hot water and for heating rooms.

Pipe connections for the heat transfer fluid are easy to create and alter thanks to the quick-release couplings.

Carefully structured instructional materials have been created for the intended modular combinations with the HL 320.04 module. As part of the documentation for the HL 320 modular system, these materials set out the basic principles and provide a step-by-step guide through the experiments.

HL 320.04
Evacuated tube collector

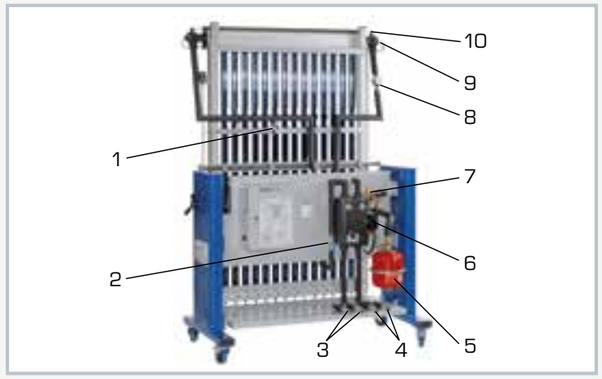

1 pressure sensor, 2 shut-off valve, 3 connectors for warm water, 4 connectors for cold water, 5 diaphragm expansion vessel, 6 circulation pump, 7 pressure relief valve, 8 flow sensor, 9 temperature sensor, 10 vent valve

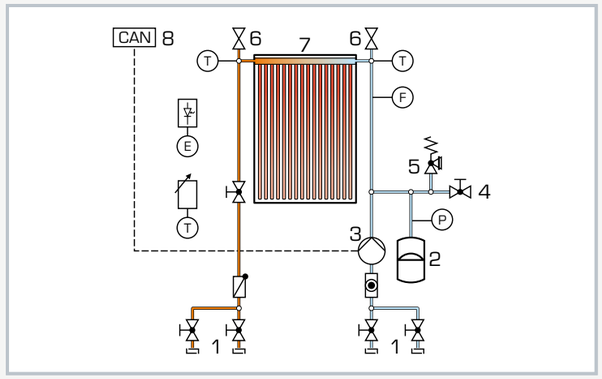

1 connections for heat transfer pipes with shut-off valves and quick-release coupling, 2 diaphragm expansion vessel, 3 pump, 4 fill valve, 5 pressure relief valve, 6 bleed valves, 7 evacuated tube collector, 8 CAN bus;
E illuminance, F flow rate, T temperature, P pressure

	1	2	3	4	5
HL 320.01			X	X	X
HL 320.02		X			X
HL 320.03	X	X		X	X
HL 320.04	(X)	(X)		(X)	(X)
HL 320.05	X	X		X	X
HL 320.07		X	X	X	X
HL 320.08			X	X	X

Recomended combinations of the HL 320 modular system

Specification

[1] trainer for investigating the function and operating behaviour of an evacuated tube collector
[2] evacuated tube collector with selective coating
[3] adjustable collector tilt angle
[4] solar circulation station with pump, expansion tank and safety valve
[5] measurement instruments and controls by HL 320.05
[6] operation with solar radiation or HL 313.01 artificial light source

Technical data

Collector
- total area: 2,1m^2
- absorbing surface: 1,5m^2
- absorber content: 1,5L
- rated throughput: 58L/h

Solar circuit station
- solar pump: 3-stage
- safety valve: 4bar
- balancing valve: 1...13L/min

Measuring ranges
- temperature:
  - 2x 0...160°C
  - 3x -50°C...180°C
- flow rate: 30....1000l/h
- pressure: 0...6bar

230V, 50Hz, 1 phase
230V, 60Hz, 1 phase
LxWxH: 1660x800x2300mm
Weight: approx. 230kg

Scope of delivery

1 trainer
1 manual

HL 320.05
Central storage module with controller

The illustration shows HL 320.05 with the switch box for HL 320.02

Description

- **module with buffer storage and bivalent storage for heating systems with renewable energies**
- **freely programmable universal controller with data logger and comprehensive software**
- **easily accessible quick-release couplings for all heat transfer pipes**
- **pump with speed control and driven three-way valve for various configurations**

The HL 320 modular system allows experiments on the generation, storage and use of heat from renewable energies. A variety of heat sources, storage types and consumers can be used. The system uses typical real-world components from the field of modern heating technology.

The HL 320.05 central storage module forms the core of the HL 320 modular system. HL 320.05 contains two different heat storage methods, piping, a pump, a driven 3-way valve and safety devices. Quick-release couplings on the front of the module enables the hydraulic connection to other modules of the HL 320 modular system.

HL 320.05 also includes the freely programmable universal controller UVR1611. This controller allows you to operate and study all intended HL 320 modular combinations.

Thoroughly documented configuration files for introductory and advanced experiments are available for all recommended HL 320 modular combinations. Newly created configurations or changes can be stored in the controller's memory. Easy-to-understand PC programs can be used to edit configurations and to acquire and display measured values.

Carefully structured instructional materials have been created for the intended modular combinations using the HL 320.05 module. As part of the documentation for the HL 320 modular system, these materials set out the basic principles and provide a step-by-step guide through the experiments.

Learning objectives/experiments

- the following learning objectives can be worked through, depending on the selected HL 320 modular combination:
  - familiarisation with modern heating systems based on renewable energy sources
  - commissioning of heating systems with solar thermal energy and heat pump
  - electrical, hydraulic and control engineering operating conditions
  - properties of various heat storage methods
  - creation of energy balances for different system configurations
  - development of control strategies for different operating modes

HL 320.05
Central storage module with controller

1 fresh water inflow, 2 temperature sensor, 3 bivalent storage, 4 bleed valve, 5 pressure relief valve, 6 freely programmable universal controller, 7 pressure sensor, 8 buffer storage, 9 speed-controlled pump, 10 driven 3-way valve

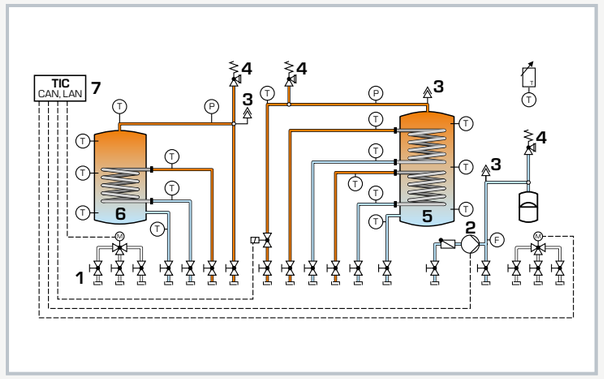

1 connections for heat transfer pipes with shut-off valves and quick-release coupling, 2 pump, 3 bleed valves, 4 pressure relief valves, 5 bivalent storage, 6 buffer storage, 7 TIC programmable universal controller; F flow rate, P pressure, T temperature

	1	2	3	4	5
HL 320.01			X	X	X
HL 320.02		X			X
HL 320.03	X	X		X	X
HL 320.04	(X)	(X)		(X)	(X)
HL 320.05	X	X		X	X
HL 320.07		X	X	X	X
HL 320.08			X	X	X

Recomended combinations of the HL 320 modular system

Specification

[1] trainer with buffer storage and bivalent storage for experiments with the HL 320 modular system
[2] heat transfer pipes with quick-release coupling and shut-off valve
[3] pressure relief and bleed valves for safe operation
[4] circulation pump with differential pressure or speed control
[5] driven 3-way valves
[6] temperature sensors for heat storage and room temperature
[7] 2 pressure sensors for system monitoring
[8] flow meters and temperature sensors for determining the heat flows
[9] freely programmable universal controller with data logger and PC connection via LAN

Technical data

Buffer storage
- storage capacity: 150L
- number of heat exchangers: 1
- operating pressure: max. 5bar
- operating temperature: max. 95°C

Bivalent storage
- storage capacity: 200L
- number of heat exchangers: 2
- operating pressure: max. 5bar
- operating temperature: max. 95°C

Pump
- max. flow rate $3m^3/h$
- max. head: 4m

Universal controller
- inputs: up to 16 (expandable)
- outputs: up to 16 (expandable)
- interfaces: DL bus, CAN, LAN

Measuring ranges
- temperature:
  - 16x -50°C...180°C
  - 1x 0...40°C
- flow rate: 30...1000L/h
- pressure: 2x 0...6bar

230V, 50Hz, 1 phase
230V, 60Hz, 1 phase, 120V, 60Hz, 1 phase
UL/CSA optional
LxWxH: 2400x810x1900mm
Weight: approx. 220kg

Required for operation

PC with Windows

Scope of delivery

1 trainer
1 set of instructional material (with sample programs for the universal controller)

HL 320.07
Underfloor heating / geothermal energy absorber

Description

- **trainer for the HL 320 "Solar thermal energy and heat pump" system**
- **can be used as heat sink or heat source**
- **option for heat transfer pipes in various lengths**
- **temperature and flow sensors for connection to the HL 320.05 controller module**

Underfloor heaters transfer heat by piping systems arranged in a spiral or winding pattern beneath the floor covering. Underfloor heating requires much lower feed flow temperature than conventional radiators. Underfloor heating systems are particularly well suited for use with heating systems that use solar thermal collectors.

Besides its function as a heat sink when used as an underfloor heating system, the HL 320.07 trainer can also be used as a heat source for a heat pump in the HL 320 modular system. In this case, the direction of the heat transport is reversed.

HL 320.07 is equipped with three individually selectable piping systems of different lengths. The pipes are surrounded by a tank which can be filled with water if necessary. Sensors are mounted on the piping system to detect the temperature on the feed and return.

Heat quantities and energy balances can be calculated using these temperatures together with the measurement data from the integrated flow meter.

Carefully structured instructional materials have been created for the intended modular combinations with the HL 320.07 module. As part of the documentation for the HL 320 modular system, these materials set out the basic principles and provide a step-by-step guide through the experiments.

Learning objectives/experiments

- energy balance in combined heating systems for domestic hot water generation and heating
- heat transfer in an underfloor heating system
- use of heat sources for heat pump systems
- learning objectives of the HL 320 modular system

HL 320.07
Underfloor heating / geothermal energy absorber

1 connection for feed, 2 connection for return, 3 tanks for hot and cold water, 4 feed distributor, 5 flow meter, 6 return distributor, 7 info panel, 8 connection box for sensors, 9 return temperature sensor, 10 flow meter, 11 return temperature sensor

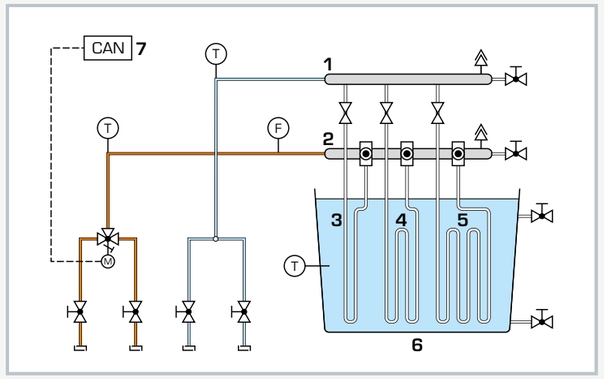

1 return distributor, 2 feed distributor, 3 10m piping circuit, 4 20m piping circuit, 5 30m piping circuit, 6 tanks for experiments with hot and cold water, 7 CAN bus; T temperature, F flow rate

	1	2	3	4	5
HL 320.01			X	X	X
HL 320.02		X			X
HL 320.03	X	X		X	X
HL 320.04	(X)	(X)		(X)	(X)
HL 320.05	X	X		X	X
HL 320.07		X	X	X	X
HL 320.08			X	X	X

Recomended combinations of the HL 320 modular system

Specification

[1] heat sink or heat source for the HL 320 modular system
[2] 3 selectable pipe lengths for heat transfer
[3] flow meters and temperature sensors for determining the heat flows
[4] tanks for hot or cold water
[5] connections for transmitting measurement data to an external controller

Technical data

Pipes
- lengths: 10m, 20m, 30m
- material: polyethylene
- wall thickness: 2mm
- outer diameter: 16mm
- operating pressure: max. 3bar

Tank
- volume: 200L

Measuring ranges
- temperature: 3x -50...180°C
- flow rate: 30...1000L/h

LxWxH: 1500x 800x1700mm
Weight: approx. 95kg

Scope of delivery

1 trainer
1 manual

HL 320.08
Fan heater / air heat exchanger

Description

- **trainer for the HL 320 "solar thermal energy and heat pump" modular system**
- **use as a heat source or heat sink**
- **axial fan with two speed settings**

Trainer consisting of a fan convector with piping, quick-release couplings and temperature sensors. The trainer may be used both to heat rooms and to absorb ambient heat from the outside air. It can thus be operated as either a heat sink or a heat source for a heat pump.

In the case of heating rooms, compared to traditional heating radiators, fan heaters offer the possibility of achieving a comparatively good transfer of heat to the room air, even at small dimensions. This advantage makes it possible to operate room heating with lower temperatures in the heating circuit. When combined with a heat pump, the fan heater therefore often represents a beneficial application both economically and in terms of energy, especially when renovating heating systems in old buildings.

When absorbing ambient heat to supply heat to a heat pump, air heat exchangers are often used when there is no access or difficulty accessing other heat sources such as groundwater or geothermal heat collectors. The disadvantage of the energy balance, particularly unfavourable in winter, in this case is contrasted with the advantage of lower initial investment costs.

Carefully structured instructional materials have been created for the recommended modular combinations with the HL 320.08 module. As part of the documentation for the HL 320 modular system, these materials set out the basic principles and provide a step-by-step guide through the experiments.

Learning objectives/experiments

- use of a fan convector for heating and cooling rooms
- how the temperature difference between the heating feed and return affects the overall efficiency of a heating system
- operating conditions when used as an air heat exchanger in a heat pump system
- comparison of an air heat exchanger with other heat sources in a heat pump system

HL 320.08
Fan heater / air heat exchanger

1 junction box, 2 CAN-bus connecting sockets, 3 flow meter, 4 feed flow, 5 3-way mixing valve, 6 return flow, 7 temperature sensor feed flow, 8 fan convector, 9 vent valve

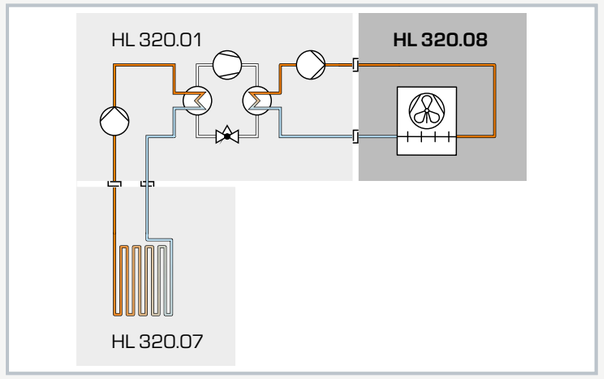

Inclusion of HL 320.08 in one possible configuration of the HL 320 modular system

	1	2	3	4	5
HL 320.01			X	X	X
HL 320.02		X			X
HL 320.03	X	X		X	X
HL 320.04	(X)	(X)		(X)	(X)
HL 320.05	X	X		X	X
HL 320.07		X	X	X	X
HL 320.08			X	X	X

Recomended combinations of the HL 320 modular system

Specification

[1] fan convector for connection to the HL 320 modular system
[2] axial fan with two selectable speed settings
[3] control by means of other controllers in the HL 320 system (CAN bus)
[4] temperature sensors for feed and return
[5] quick-release couplings with shut-off valves for connecting the pipes

Technical data

Fan
- speed: 900/1400min^{-1}
- flow rate: 683/1155m^{3}h^{-1}

Heat exchanger
- nominal cooling capacity: 2kW
- max. operating pressure: 10bar

Measuring ranges
- temperature:
  - 3x -50°C...180°C
- flow rate: 30...1000L/h

230V, 50Hz, 1 phase
230V, 60Hz, 1 phase
LxWxH: 1500x 800x1500mm
Weight: approx. 95kg

Scope of delivery

1 trainer
1 manual

The complete GUNT programme – equipment for engineering education

1 Engineering mechanics and engineering design

- statics
- strength of materials
- dynamics
- machine dynamics
- engineering design
- materials testing

2 Mechatronics

- engineering drawing
- cutaway models
- dimensional metrology
- fasteners and machine parts
- manufacturing engineering
- assembly projects
- maintenance
- machinery diagnosis
- automation and process control engineering

3 Thermal engineering

- fundamentals of thermodynamics
- thermodynamic applications in HVAC
- renewable energies
- thermal fluid energy machines
- refrigeration and air conditioning technology

4 Fluid mechanics

- steady flow
- transient flow
- flow around bodies
- fluid machinery
- components in piping systems and plant design
- hydraulic engineering

5 Process engineering

- mechanical process engineering
- thermal process engineering
- chemical process engineering
- biological process engineering
- water treatment

6 2E Energy & environment

Energy

- solar energy
- hydropower and ocean energy
- wind power
- biomass
- geothermal energy
- energy systems
- energy efficiency in building service engineering

Environment

- water
- air
- soil
- waste

Planning and consulting · Technical service
Commissioning and training

Index

Keyword	Code (page)
A	
absorbing surface	ET 202 (248) HL 320.03 (308)
absorption refrigeration system	ET 480 (212)
absorptivity, radiation	WL 362 (32) WL 460 (50)
adiabatic change of state	WL 103 (20)
adiabatic exponent	WL 103 (20)
air conditioning system	ET 605 (290) ET 620 (280) ET 915.06 (284) ET 915.07 (286)
air duct	ET 620 (280) ET 915.06 (284) ET 915.07 (286) HL 720 (272)
air flow rate	ET 513 (156)
air heat exchanger	HL 320.08 (316)
air humidity	ET 620 (280) ET 915.06 (284) ET 915.07 (286) HL 720 (272) WL 201 (22) WL 202 (24) WL 320 (106) WL 920 (28)
air vent	ET 620 (280) HL 720 (272)
air-cooled engine	CT 100.20 (178) CT 100.21 (179) CT 100.22 (180) CT 150 (170) CT 151 (171) CT 152 (172) CT 153 (173)
air-to-water heat pump	ET 102 (222/260)
ammonia as refrigerant	ET 480 (212)
angle of incidence	ET 202 (248) HL 320.03 (308)
annular flow	WL 210 (56)
asynchronous motor	CT 110 (182) CT 300 (188)
auto-ignition	CT 100.22 (180) CT 100.23 (181) CT 151 (171) CT 400.02 (194)
automation of an air conditioning system	ET 605.01 (289) ET 605.02 (289) ET 605.03 (289)
B	
bimetallic thermometer	WL 202 (24) WL 920 (28)
boiler efficiency	ET 810 (122) ET 830 (134) ET 850 (130)
boiling	WL 210 (56) WL 220 (58)
boiling point, water	WL 204 (60) WL 210 (56) WL 220 (58)
Bourdon tube pressure gauge	WL 202 (24)
braking device	CT 110 (182) CT 300 (188) CT 400 (196)
building materials	WL 376 (36)
C	
calorimeter	CT 100.11 (177) CT 300.01 (185) ET 805.50 (118)
camping fridge	ET 480 (212)
capacitive humidity measurement	WL 201 (22)
capillary tube	ET 405 (262) ET 915.01 (228) ET 915.02 (230)
carbon dioxide, measurement	CT 159.02 (169/177/185/191)
carbon monoxide, measurement	CT 159.02 (169/177/185/191)
change of state of the air	ET 605 (290) ET 620 (280) ET 915.07 (286) WL 201 (22) WL 312 (98) WL 320 (106) ET 915.06 (284)
change of state, gases	WL 102 (18)
change of state, isochoric	WL 102 (18)
change of state, isothermal	WL 102 (18)
characteristic of a Peltier element	ET 120 (206)
characteristic, compressor	ET 432 (158) ET 500 (154) ET 512 (162)
charging efficiency	CT 110 (182) CT 159 (174) CT 300 (188) CT 400 (196) ET 432 (158) ET 513 (156)
Clément-Desormes	WL 103 (20)
climate controller	ET 605.02 (289) ET 620 (280)
climatic chamber	ET 605 (290) ET 915.07 (286)
CO	CT 159.02 (169/177/185/191)
CO_2	CT 159.02 (169/177/185/191)
coefficient of performance	ET 102 (222/260) ET 350 (220) ET 352 (208) ET 400 (204) ET 405 (262) ET 420 (268)
cold production with compressed air	ET 122 (210)
cold production with thermal energy	ET 480 (212)
combustion chamber	ET 794 (148)
combustion chamber inserts	CT 152 (172)
comparison of characteristic variables of a refrigeration system/heat pump	ET 405 (262)
comparison of different expansion elements	ET 915.01 (228) ET 915.02 (230)
composition of exhaust gases	CT 159.02 (169/177/185/191)
compressed air generation system	ET 500 (154) ET 512 (162) ET 513 (156)
compression ratio	CT 152 (172)
compression refrigeration system	ET 102 (222/260) ET 350 (220) ET 400 (204) ET 420 (268) ET 915 (226)
compressor	ET 432 (158) ET 500 (154) ET 508 (160) ET 512 (162) ET 513 (156)
compressor capacity	ET 405 (262) ET 432 (158)
compressor characteristic	ET 432 (158) ET 500 (154) ET 512 (162)
compressor pressure ratio	ET 102 (222/260)
compressor, single-stage	ET 513 (156)
condensation process	WL 230 (62)
condenser	ET 805 (140) ET 810 (122) ET 813 (126) ET 830 (134) ET 833 (138) ET 851 (132) WL 230 (62)
convection	WL 377 (38) WL 430 (46) WL 440 (48)
convective heat transfer	ET 300 (82) WL 210 (56) WL 230 (62) WL 314 (70) WL 315C (102) WL 320 (106) WL 430 (46) WL 440 (48)
convective heat transfer, air	WL 312 (98) WL 314 (70)
cooling column	WL 320 (106)
cooling tower	WL 320 (106)
counterflow heat exchanger	WL 110 (86)
crank angle	CT 100.13 (177) CT 159.01 (169) CT 300.09 (185) CT 400.09 (191)
crankshaft position sensor	CT 100.13 (177) CT 159.01 (169) CT 300.09 (185) CT 400.09 (191)
critical point, water	WL 204 (60)
cross flow	WL 110.03 (92) WL 315C (102)
cyclone tube	ET 122 (210)
cyclone water separator	ET 805.50 (118)
cylinder pressure measurement	CT 100.13 (177) CT 100.14 (177)
D	
deep-freeze stage	ET 915.02 (230)
dehumidification	ET 605 (290) ET 620 (280) ET 915.07 (286) WL 201 (22)
determination of refrigeration capacity	ET 350 (220) ET 400 (204) ET 420 (268)
diesel engine	CT 100.22 (180) CT 100.23 (181) CT 151 (171) CT 400.02 (194)
direct contact heat exchanger	WL 320 (106)
direct evaporator	ET 620 (280) WL 312 (98)
direct injection	CT 100.22 (180) CT 151 (171) CT 400.02 (194)
discharged amount of engine heat	CT 100.23 (181) CT 400.01 (192) CT 400.02 (194)
dispersed flow	WL 210 (56)
domestic water heating	HL 313 (250) HL 320.02 (306) HL 320.07 (314)
dropwise condensation	WL 230 (62)
E	
eddy current brake	CT 400 (196)
emissivity of radiation	WL 362 (32) WL 460 (50)
energy balance	ET 300 (82) WL 308 (76) WL 320 (106)
energy efficiency	ET 420 (268)
engine test stand	CT 110 (182) CT 159 (174) CT 300 (188) CT 400 (196)
evacuated tube collector	HL 320.04 (310)
evaporation heat	WL 320 (106)
evaporation pressure controller	ET 405 (262) ET 915.02 (230)
evaporation process	WL 210 (56) WL 220 (58)
exhaust gas analysis	CT 159.02 (169/177/185/191) ET 850 (130)
exhaust gas calorimeter	CT 100.11 (177) CT 300.01 (185)
exhaust gas enthalpy	CT 100.11 (177) CT 300.01 (185)
exhaust gas temperature	CT 110 (182) CT 159 (174) CT 300 (188) CT 400 (196)
expansion element	ET 405 (262) ET 915.01 (228) ET 915.02 (230)
expansion valve	ET 405 (262) ET 420 (268)
F	
fan convector	HL 320.08 (316)
fan heater	HL 320.08 (316)
feedwater treatment	ET 805 (140) ET 830 (134) ET 833 (138)
film boiling	WL 210 (56) WL 220 (58)
film condensation	WL 230 (62)
finned tube heat exchanger	ET 300 (82) WL 312.02 (97) WL 312.03 (97)
fire protection flap	ET 620 (280) HL 720 (272)
flat collector	HL 313 (250) HL 320.03 (308)
fluidisation	WL 225 (108)
fluidisation velocity	WL 225 (108)
fluidised bed	WL 225 (108)
forced convection	WL 312 (98) WL 314 (70) WL 430 (46) WL 440 (48)
four-stroke engine	CT 100.20 (178) CT 100.22 (180) CT 100.23 (181) CT 150 (170) CT 151 (171) CT 152 (172) CT 400.01 (192) CT 400.02 (194)
free convection	WL 314 (70) WL 430 (46)
friction loss	CT 110 (182) CT 159 (174) CT 300 (188) CT 400 (196)
fuel consumption	CT 110 (182) CT 159 (174) CT 300 (188) CT 400 (196)
fuel mixture composition	CT 152 (172)
fuel-air ratio	CT 110 (182) CT 159 (174) CT 300 (188) CT 400 (196) CT 159.02 (169/177/185/191) ET 796 (150)
G	
gas exchange	CT 100.13 (177)
gas pressure thermometer	WL 202 (24)
gas turbine system	ET 792 (144) ET 794 (148) ET 795 (146)
generator	ET 810 (122) ET 830 (134) ET 833 (138)
geothermal energy	ET 262 (254) ET 264 (256) HL 320.07 (314)
geothermal energy absorber	HL 320.07 (314)
geothermal probe	ET 262 (254)
H	
hair hygrometer	WL 201 (22)
hardware software integration	ET 915 (226)
HC	CT 159.02 (169/177/185/191)
heat capacity	CT 100.11 (177) CT 300.01 (185) WL 422 (44)
heat conduction	WL 315C (102) WL 372 (34) WL 430 (46) WL 900 (52)
heat conduction in fluids	WL 422 (44)
heat conduction in solids	WL 372 (34)
heat conduction in metals	WL 420 (42) WL 900 (52)
heat exchanger, finned tube	ET 300 (82) WL 312.02 (97) WL 312.03 (97) WL 315C (102)
heat exchanger, plate	WL 110.02 (90) WL 315C (102)
heat exchanger, shell and tube	WL 110.03 (92) WL 312.01 (97) WL 315C (102)
heat exchanger, tubular	WL 110.01 (88) WL 302 (78) WL 308 (76) WL 315C (102)
heat exchangers, power	WL 110 (86)
heat flux	WL 302 (78) WL 314 (70)
heat generation with compressed air	ET 122 (210)
heat pipe principle	ET 262 (254)
heat pump	ET 102 (222/260) ET 405 (262) HL 320.01 (304)
heat storage	HL 320.05 (312)
heat transfer	WL 362 (32) WL 377 (38) WL 420 (42) WL 422 (44) WL 440 (48) WL 460 (50)
heat transfer coefficient	WL 225 (108) WL 230 (62) WL 314.01 (72) WL 314.02 (73) WL 314.03 (74) WL 315C (102) WL 377 (38) WL 420 (42)
heating and cooling on the h-x diagram	ET 605 (290) ET 620 (280) ET 915.07 (286)
h-s diagram	ET 850 (130) ET 805.50 (118)
HSI training system	ET 915 (226)
humid air	ET 605 (290) WL 201 (22)
humidify	ET 605 (290) ET 620 (280) ET 915.07 (286)
humidity measurement of air	WL 320 (106) WL 201 (22)
h-x diagram	ET 605 (290) ET 620 (280) ET 915.06 (284) ET 915.07 (286) WL 201 (22) WL 320 (106)
hydrocarbons, measurement	CT 159.02 (169/177/185/191)
hygrometer	WL 201 (22)
hygrometric humidity measurement	WL 201 (22)
I	
ice store	ET 420 (268)
ideal coefficient of performance	ET 102 (222/260)
ideal gases	WL 103 (20)
ignition point	CT 100.13 (177) CT 300.09 (185)
illuminance	ET 202 (248) HL 320.03 (308)
impulse turbine	ET 796 (150) ET 851 (132)
inclined tube manometer	WL 202 (24)
increase of pressure	CT 100.13 (177)
indicated power output	CT 100.13 (177) CT 159.01 (169) CT 300.09 (185) CT 400.09 (191)
indicated pressure	CT 100.13 (177) CT 400.01 (192) CT 400.02 (194)
intake air	CT 110 (182) CT 159 (174) CT 300 (188) CT 400 (196) ET 508 (160)
intake pressure	CT 100.20 (178) CT 100.21 (179) CT 100.22 (180) CT 100.23 (181)
inverse-square distance law	WL 362 (32) WL 460 (50)
isochoric change of state	WL 103 (20)
isochoric/isothermal change of state of gases	WL 102 (18)

Index

Keyword	Code (page)
J	
jacketed heat exchanger	WL 110.04 (94) WL 315C (102)
jet engine	ET 792 (144) ET 796 (150)
K	
Kirchhoff's laws	WL 362 (32) WL 460 (50)
KVP (evaporation pressure controller)	ET 405 (262) ET 915.02 (230)
L	
Lambert's cosine law	WL 362 (32) WL 460 (50)
linear heat conduction	WL 372 (34)
load diagram	CT 110 (182) CT 159 (174) CT 300 (188) CT 400 (196)
log p-h diagram	ET 102 (222/260) ET 350 (220) ET 400 (204) ET 405 (262) ET 420 (268) ET 915 (226)
M	
maximum cooling distance	WL 320 (106)
Mollier	ET 605 (290) ET 620 (280) ET 915.06 (284) ET 915.07 (286) WL 201 (22) WL 320 (106)
multileaf damper	HL 720 (272) ET 620 (280)
multistage compressor	ET 500 (154) ET 508 (160)
N	
nucleate boiling	WL 220 (58)
Nusselt number	WL 314 (70) WL 377 (38) WL 440 (48)
O	
observation of phase transition	ET 350 (220) WL 102 (18)
once-through steam boiler	ET 830 (134) ET 850 (130)
open refrigerant compressor	ET 432 (158)
operating behaviour under load	ET 102 (222/260) ET 352 (208) ET 480 (212) ET 605 (290) ET 915.01 (228) ET 915.02 (230)
Otto engine	CT 100.20 (178) CT 100.21 (179) CT 150 (170) CT 152 (172) CT 153 (173) CT 400.01 (192)
outer air operation	ET 605 (290) ET 915.07 (286)
overall heat transfer coefficient	WL 110 (86) WL 302 (78) WL 308 (76) WL 315C (102) WL 315.01 (80)
P	
parallel connection of evaporators	ET 405 (262) ET 915.02 (230)
parallel flow heat exchanger	WL 110 (86)
passive mode	CT 110 (182) CT 159 (174) CT 300 (188)
PC data acquisition	CT 110 (182) CT 100.11 (177) CT 100.13 (177) CT 159 (174) CT 300 (188) CT 400 (196)
Peltier effect	ET 120 (206)
Peltier element	ET 120 (206)
petrol engine	CT 100.20 (178) CT 100.21 (179) CT 150 (170) CT 152 (172) CT 153 (173) CT 400.01 (192)
piston compressor	ET 432 (158) ET 500 (154) ET 508 (160) ET 512 (162) ET 513 (156)
piston steam engine	ET 810 (122)
plate heat exchanger	WL 110.02 (90) WL 315C (102)
PLC	ET 620 (280)
power curve	CT 110 (182) CT 159 (174) CT 300 (188) CT 400 (196)
power diagram	CT 110 (182) CT 159 (174) CT 300 (188) CT 400 (196)
power station	ET 805 (140) ET 810 (122) ET 830 (134) ET 833 (138)
power turbine	ET 792 (144) ET 794 (148)
Prandtl	WL 314.01 (72) WL 314.02 (73) WL 314.03 (74)
pre-chamber engine	CT 100.23 (181)
pressure curve	CT 100.13 (177) CT 159.01 (169) CT 300.09 (185) CT 400.09 (191) ET 620 (280) ET 860 (116) HL 720 (272)
pressure limiter	ET 860 (116)
pressure measurement	WL 202 (24)
pressure transducer	CT 100.14 (177)
pressure/volume flow characteristic	ET 432 (158)
psychrometer	WL 201 (22) WL 202 (24) WL 920 (28)
psychrometric humidity measurement	WL 201 (22)
p-t diagram	CT 100.13 (177) CT 159.01 (169) CT 300.09 (185) CT 400.09 (191)
Pt100	WL 202 (24) WL 920 (28)
p-V diagram	CT 100.13 (177) CT 159.01 (169) CT 300.09 (185) CT 400.09 (191) ET 500 (154) ET 508 (160) ET 795 (146)
R	
radial heat conduction	WL 372 (34)
radiation	WL 377 (38)
radiation coefficient	WL 377 (38)
Rankine cycle	ET 352 (208)
recirculating air operation	ET 915.07 (286)
reflectivity of radiation	WL 362 (32) WL 460 (50)
regenerative feedback unit	CT 110 (182) CT 300 (188)
residual oxygen content	CT 159.02 (169/177/185/191)
resistance temperature detector	WL 202 (24) WL 920 (28)
Reynolds number	WL 314 (70) WL 440 (48)
rise of pressure	CT 100.13 (177)
room air conditioning	ET 605 (290) ET 620 (280) ET 915.07 (286)
S	
safety chain	ET 860 (116)
safety device	ET 860 (116)
saturated vapour	ET 810 (122) ET 813.01 (124) WL 204 (60)
separating calorimeter	ET 805.50 (118)
series connection of evaporators	ET 405 (262) ET 915.02 (230)
shell and tube heat exchanger	WL 110.03 (92) WL 315C (102)
single-stage compressor	ET 513 (156)
slug flow	WL 210 (56)
smoke detector	ET 620 (280)
software controller	ET 605.01 (289)
solar circuit	HL 313 (250)
solar collector	ET 202 (248) HL 320.03 (308)
solar thermal energy	ET 202 (248) HL 320.03 (308) HL 320.04 (310) HL 320.05 (312)
sound insulation link	ET 620 (280) HL 720 (272)
spark plug sensor	CT 100.14 (177)
specific exhaust gas heat capacity	CT 100.11 (177)
specific fuel consumption	ET 792 (144) ET 794 (148) ET 796 (150) ET 805 (140) ET 830 (134) ET 833 (138)
specific fuel consumption	CT 110 (182) CT 159 (174) CT 300 (188) CT 400 (196)
specific steam consumption	ET 805 (140) ET 813 (126) ET 830 (134) ET 833 (138) ET 851 (132)
specific thrust	ET 792 (144) ET 796 (150)
speed measurement	CT 110 (182) CT 300 (188) CT 400 (196)
standard cooling stage	ET 915.02 (230)
start-up procedure, gas turbine	ET 795 (146) ET 796 (150)
steam boiler	ET 810 (122) ET 813.01 (124) ET 830 (134) ET 850 (130) ET 860 (116)
steam consumption, specific	ET 813 (126) ET 830 (134) ET 833 (138) ET 851 (132)
steam engine	ET 810 (122) ET 813 (126)
steam generator	ET 813.01 (124) ET 830 (134) ET 833 (138) ET 850 (130)
steam humidifier	ET 605 (290) ET 620 (280) ET 915.07 (286)
steam power plant	ET 810 (122) ET 813 (126) ET 830 (134) ET 833 (138) ET 850 (130)
steam turbine	ET 830 (134) ET 833 (138) ET 851 (132)
Stefan-Boltzmann's law	WL 362 (32) WL 460 (50)
stirred tank	WL 110.04 (94)
stirred tank, double jacket	WL 110.04 (94) WL 315C (102)
stirring machine	WL 110.04 (94) WL 315C (102) WL 920 (28)
sub-cooled boiling	WL 210 (56)
superheated steam	ET 805 (140) ET 830 (134) ET 833 (138) ET 850 (130)
superheater	ET 805 (140) ET 830 (134) ET 833 (138) ET 850 (130)
T	
temperature control	ET 915.02 (230)
temperature measurement	WL 202 (24) WL 900 (52)
temperature profile	WL 110 (86) WL 372 (34) WL 440 (48) WL 900 (52)
temperature-pressure diagram	WL 204 (60)
thermal conductivity	ET 262 (254) WL 372 (34) WL 376 (36) WL 420 (42) WL 900 (52)
thermal radiation	WL 362 (32) WL 377 (38) WL 460 (50)
thermal resistance	WL 376 (36) WL 420 (42) WL 422 (44)
thermistor NTC	WL 202 (24) WL 920 (28)
thermocouple	WL 202 (24) WL 920 (28)
thermoelectric cold production	ET 120 (206)
thermoelectric effect	ET 120 (206)
thermometer	WL 202 (24) WL 920 (28)
throttling calorimeter	ET 805.50 (118)
thrust measurement	ET 792 (144) ET 796 (150)
time dependency	WL 110.04 (94)
torque characteristic	CT 110 (182) CT 300 (188) CT 400 (196)
torque measurement	CT 110 (182) CT 300 (188) CT 400 (196)
triple point, water	WL 204 (60)
tubular heat exchanger	WL 110.01 (88) WL 302 (78) WL 308 (76) WL 315C (102)
tubular heat exchanger	WL 110.01 (88) WL 312.01 (97)
turbine curve	ET 792 (144) ET 794 (148)
turbine efficiency, gas turbine	ET 792 (144) ET 794 (148) ET 796 (150)
turbine efficiency, steam turbine	ET 805 (140) ET 830 (134) ET 833 (138) ET 851 (132)
turbine, action	ET 796 (150) ET 851 (132)
turbine, axial	ET 796 (150) ET 805 (140) ET 830 (134) ET 833 (138) ET 851 (132)
turbulence chamber engine	CT 100.23 (181)
two-stroke engine	CT 100.21 (179) CT 153 (173)
two-stroke-engine	CT 153 (173)
two-well system	ET 264 (256)
U	
Underfloor heating	HL 320.07 (314)
usable heat capacity	ET 264 (256)
V	
vapour bubbles	WL 210 (56)
vapour content	ET 805.50 (118)
vapour depressurisation	ET 805.50 (118)
vapour jet compressor	ET 352 (208)
vapour jet refrigerating machine	ET 352 (208)
vapour pressure curve of water	ET 810 (122) ET 813 (126) WL 204 (60) WL 220 (58) WL 230 (62)
variable compression	CT 152 (172)
ventilation and air conditioning technology	HL 720 (272)
ventilation system	HL 720 (272)
ventilation technology	ET 620 (280) HL 720 (272)
volumetric efficiency	CT 110 (182) CT 159 (174) CT 300 (188) CT 400 (196) ET 432 (158) ET 513 (156)
volumetric efficiency	CT 110 (182) CT 159 (174) CT 300 (188) CT 400 (196)
vortex cold generator	ET 122 (210)
W	
water-cooled engine	CT 100.23 (181) CT 400.01 (192) CT 400.02 (194)
weather louvre	HL 720 (272) ET 620 (280)
wet cooling tower	ET 420 (268) WL 320 (106)
wet deck surface	WL 320 (106)
wet steam	ET 850 (130) WL 210 (56)
whirl chamber engine	CT 100.23 (181)

Product overview

CT		
CT 100.11	Exhaust gas calorimeter for CT 110	177
CT 100.13	Electronic engine indicating system for CT 110	177
CT 100.14	Pressure transducer for CT 100.20	177
CT 100.15	Pressure transducer for CT 100.23	177
CT 100.16	Pressure transducer for CT 100.22	177
CT 100.17	Pressure transducer for CT 100.21	177
CT 100.20	Four-stroke petrol engine for CT 110	178
CT 100.21	Two-stroke petrol engine for CT 110	179
CT 100.22	Four-stroke diesel engine for CT 110	180
CT 100.23	Water-cooled four-stroke diesel engine for CT 110	181
CT 110	Test stand for single-cylinder engines, 7,5 kW	182
CT 150	Four-stroke petrol engine for CT 159	170
CT 151	Four-stroke diesel engine for CT 159	171
CT 152	Four-stroke petrol engine with variable compression for CT 159	172
CT 153	Two-stroke petrol engine for CT 159	173
CT 159	Modular test stand for single-cylinder engines, 2,2 kW	174
CT 159.01	Electronic engine indicating system for CT 159	169
CT 159.02	Exhaust gas analysing unit	169
CT 159.02	Exhaust gas analysing unit	177
CT 159.02	Exhaust gas analysing unit	185
CT 159.02	Exhaust gas analysing unit	191
CT 159.03	Pressure transducer and TDC sensor for CT 150 / CT 152	169
CT 159.04	Pressure transducer and TDC sensor for CT 151	169
CT 159.05	Pressure transducer and TDC sensor for CT 153	169
CT 300	Engine test stand, 11 kW	188
CT 300.01	Exhaust gas calorimeter for CT 300	185
CT 300.04	Two-cylinder petrol engine for CT 300	186
CT 300.05	Two-cylinder diesel engine for CT 300	187
CT 300.09	Electronic engine indicating system for CT 300	185
CT 300.17	Pressure transducer and TDC sensor for CT 300.04	185
CT 300.18	Pressure transducer and TDC sensor for CT 300.05	185
CT 400	Load unit, 75 kW, for four-cylinder engines	196
CT 400.01	Four-cylinder petrol engine for CT 400	192
CT 400.02	Four-cylinder diesel engine for CT 400	194
CT 400.09	Electronic engine indicating system for CT 400	191
CT 400.16	Pressure transducer and TDC sensor for CT 400.01	191
CT 400.17	Pressure transducer and TDC sensor for CT 400.02	191

ET		
ET 102	Heat pump	222
ET 102	Heat pump	260
ET 120	Cooling using the Peltier effect	206
ET 122	Vortex cooling device	210
ET 202	Principles of solar thermal energy	248
ET 262	Geothermal probe with heat pipe principle	254
ET 264	Geothermal energy with two-well system	256
ET 300	Finned tube heat exchanger water/air	082
ET 350	Changes of state in the refrigeration circuit	220
ET 352	Vapour jet compressor in refrigeration	208
ET 400	Refrigeration circuit with variable load	204
ET 405	Heat pump for cooling and heating operation	262
ET 420	Ice stores in refrigeration	268
ET 432	Behaviour of a piston compressor	158
ET 480	Absorption refrigeration system	212
ET 500	Two-stage piston compressor	154
ET 508	Simulation of a two-stage air compressor	160
ET 512	Compressed air generation plant with piston compressor	162
ET 513	Single-stage piston compressor	156
ET 605	Air conditioning system model	290
ET 605.01	Software controller with data acquisition	289
ET 605.02	Air conditioning controller	289
ET 605.03	I/O connection box	289
ET 620	Air conditioning and ventilation system	280
ET 792	Gas turbine	144
ET 794	Gas turbine with power turbine	148
ET 795	Simulation of a gas turbine	146
ET 796	Gas turbine jet engine	150
ET 805	Steam power plant 20 kW with process control system	140
ET 805.50	Determination of the vapour content	118
ET 810	Steam power plant with steam engine	122
ET 813	Two-cylinder steam engine	126
ET 830	Steam power plant, 1,5 kW	134
ET 833	Steam power plant 1,5 kW with process control system	138
ET 850	Steam generator	130
ET 851	Axial steam turbine	132
ET 860	Safety devices on steam boilers	116
ET 915	HSI training system refrigeration and air conditioning technology, base unit	226
ET 915.01	Refrigerator model	228
ET 915.02	Model of a refrigeration system with refrigeration and freezing stage	230
ET 915.06	Model of a simple air conditioning system	284
ET 915.07	Air conditioning model	286

HL		
HL 313	Domestic water heating with flat collector	250
HL 320.01	Heat pump	304
HL 320.02	Conventional heating	306
HL 320.03	Flat collector	308
HL 320.04	Evacuated tube collector	310
HL 320.05	Central storage module with controller	312
HL 320.07	Underfloor heating/geothermal energy absorber	314
HL 320.08	Fan heater/air heat exchanger	316
HL 352	Test stand for oil, natural gas and propane gas burners	238
HL 352.01	Oil burner	240
HL 352.02	Natural gas burner	241
HL 352.03	Propane gas burner	242
HL 720	Ventilation system	272

WL		
WL 102	Change of state of gases	018
WL 103	Expansion of ideal gases	020
WL 110	Heat exchanger supply unit	086
WL 110.01	Tubular heat exchanger	088
WL 110.02	Plate heat exchanger	090
WL 110.03	Shell & tube heat exchanger	092
WL 110.04	Stirred tank with double jacket and coil	094
WL 201	Fundamentals of humidity measurement	022
WL 202	Fundamentals of temperature measurement	024
WL 203	Fundamentals of pressure measurement	026
WL 204	Vapour pressure of water – Marcet boiler	060
WL 210	Evaporation process	056
WL 220	Boiling process	058
WL 225	Heat transfer in the fluidised bed	108
WL 230	Condensation process	062
WL 302	Heat transfer in the tubular heat exchanger	078
WL 308	Heat transfer in pipe flow	076
WL 312	Heat transfer in air flow	098
WL 312.01	Heat transfer with plain tubes	097
WL 312.02	Heat transfer with finned tubes	097
WL 312.03	Heat transfer on refrigerant evaporator	097
WL 312.10	Hot water generator	096
WL 312.10	Hot water generator	100
WL 312.11	Water chiller	096
WL 312.11	Water chiller	100
WL 312.12	Condensing unit	096
WL 314	Convective heat transfer in air flow	070
WL 314.01	Heat transfer in pipes in parallel flow	072
WL 314.02	Heat transfer in pipes in mixed flow	073
WL 314.03	Heat transfer in a tube	074
WL 315.01	Shell & tube heat exchanger steam/water	080
WL 315C	Comparison of various heat exchangers	102
WL 320	Wet cooling tower	106
WL 362	Energy transfer by radiation	032
WL 372	Radial and linear heat conduction	034
WL 376	Thermal conductivity of building materials	036
WL 377	Convection and radiation	038
WL 420	Heat conduction in metals	042
WL 422	Heat conduction in fluids	044
WL 430	Heat conduction and convection	046
WL 440	Free and forced convection	048
WL 460	Heat transfer by radiation	050
WL 900	Steady-state and non-steady-state heat conduction	052
WL 920	Temperature measurement	028

Contact

G.U.N.T. Gerätebau GmbH
Hanskampring 15 – 17
D-22885 Barsbüttel
Germany

Tel. +49 (0)40 67 08 54 - 0
Fax +49 (0)40 67 08 54 - 42
Email sales@gunt.de
Web www.gunt.de

Visit our website
www.gunt.de