gunt HAMBURG

Equipment for engineering education

# Fluid mechanics

4

# Welcome to GUNT

In this catalogue, we present a comprehensive overview of our innovative demonstration and experimental units.

GUNT units are used for:

- education in technical professions
- training and education of technical personnel in trade and industry
- studies in engineering disciplines

**Imprint**

© 2018 G.U.N.T. Gerätebau GmbH. Any reuse, storage, duplication and reproduction of content – even in extracts – is prohibited without the written approval of G.U.N.T. Gerätebau GmbH.
GUNT is a registered trademark. This means GUNT products are protected, and subject to copyright.

No liability can be accepted for any misprints.
Subject to change without notice.

Image credits: G.U.N.T. Gerätebau GmbH, manufacturers' photos, Shutterstock, 123RF.
Design & typesetting: Profisatz.Graphics, Bianca Buhmann, Hamburg.
Printed on non-chlorinated, environmentally friendly paper.



# Table of contents

## Fluid mechanics

| | | |
|---|---|---|
| | Introduction | 004 |
| 1 | Fundamentals of fluid mechanics | 008 |
| 2 | Steady flow | 086 |
| 3 | Flow around bodies | 184 |
| 4 | Examples of transient flow | 240 |
| 5 | Hydraulic fluid energy machines | 256 |
| 6 | Components in piping systems and plant design | 312 |
| 7 | Fluidic experimental plants | 358 |
| | Index | 402 |
| | Product overview | 408 |

# Introduction to the field

Fluid mechanics plays a fundamental and key role in engineering education. Lectures and laboratory exercises on fluid mechanics are part of the standard curriculum for a wide range of engineering disciplines, such as mechanical and plant engineering, energy and process engineering, environmental engineering, shipbuilding, civil engineering, agriculture, food technology etc. The fundamental principles of fluid mechanics are also an indispensable part of the teaching programme in vocational education and training for many technical professions.

- mechanical engineering
- system engineering
- aeronautics
- automotive engineering
- propulsion technology
- energy technologies

- mechanical engineering
- aeronautics
- applied sciences
- shipbuilding
- energy technologies
- process technology

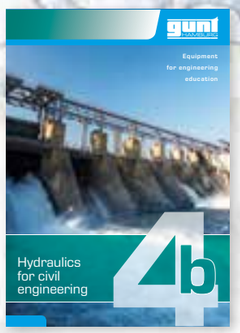


- hydraulic engineering
- supply engineering
- shipbuilding
- marine technology
- environmental engineering
- geosciences

## What can GUNT do for you...

...to support and enrich your lectures and lessons?

We provide demonstration, experiment and research equipment for virtually all topics related to the field of fluid mechanics.

**You** know – as a lecturer and academic in colleges and universities – and **we** know – as a developer and manufacturer – that well thought out and clear experiments result in a stable and sustainable foundation of knowledge in students.

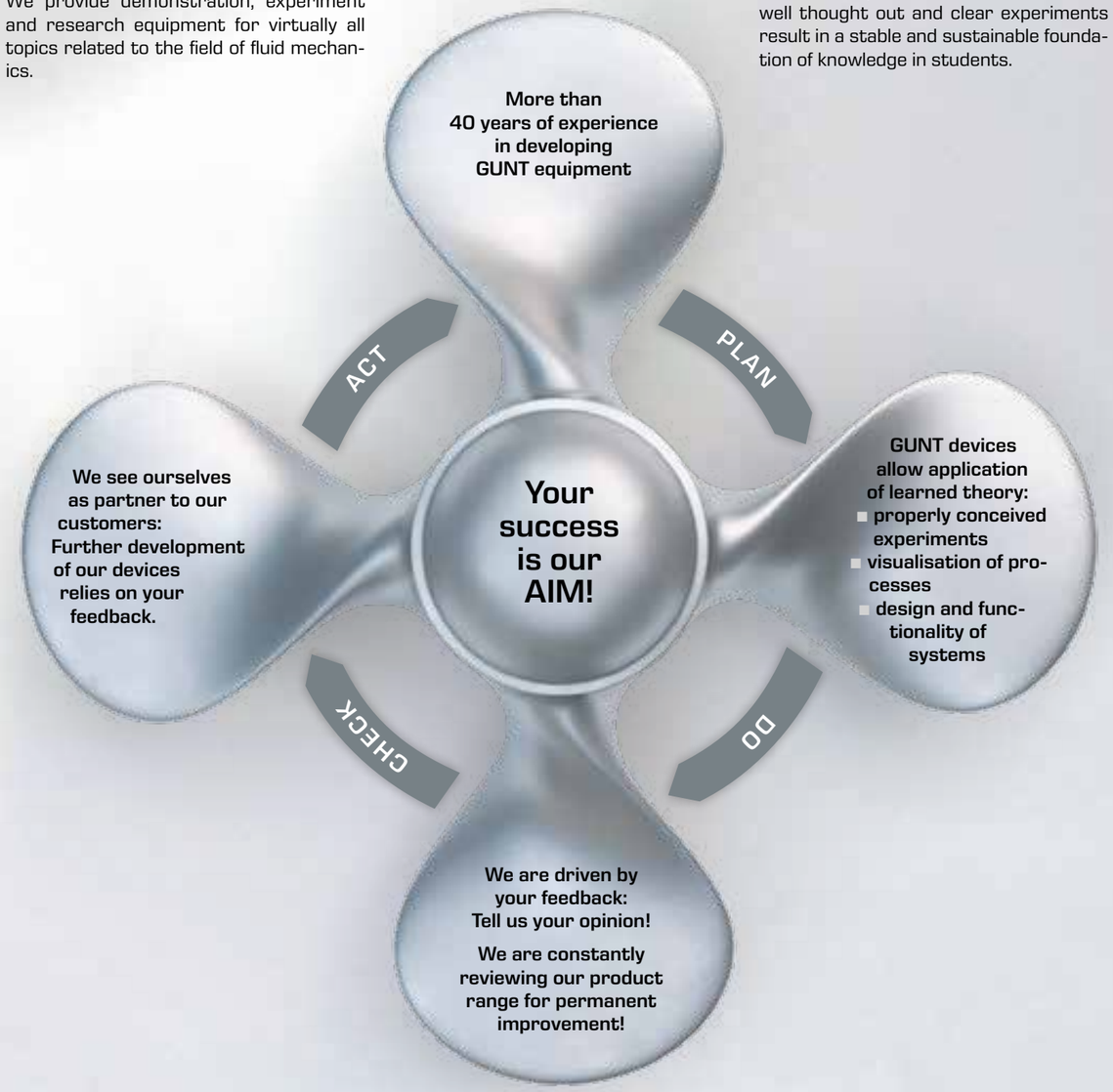

# Introduction to the field

GUNT devices cover – basically – the educational content of a common university curriculum in the subject area of fluid mechanics. To help you find the best device for your specific needs, each chapter of this catalogue begins by allocating the learning content from the curriculum to the corresponding GUNT device.

The chapters are largely structured in line with the structure of the standard curriculum. Nevertheless, the allocation of individual GUNT experimental units to the curricular elements is not completely "clear-cut" since with various devices the overall range of experiments is more broad and more variable. This means that you may use GUNT devices for more than is specifically required by the curriculum.

| Main area | Elements, keywords |
|---|---|
| Physics and properties of fluids | ■ material properties of liquids and gases<br>■ density, temperature, pressure<br>■ heat capacity, gas constant, enthalpy, steam pressure<br>■ viscosity, surface tension, capillarity |
| Fluids at rest | ■ basic equation of hydrostatics, connected vessels, hydraulic press<br>■ compressive forces on boundary surfaces<br>■ buoyancy |
| Fundamentals of fluid dynamics | ■ friction effects, flow patterns<br>■ laws of conservation, control volume<br>■ continuity equation<br>■ momentum equation, principle of angular momentum |
| Steady flow of incompressible fluids | ■ cavitation<br>■ flow in pipe systems: laminar, turbulent<br>■ pressure losses in straight pipes, in pipe fittings, in valves and fittings<br>■ discharge processes |
| Steady flow of compressible fluids | ■ energy equation of gaseous fluids<br>■ velocity of sound, Mach number, critical velocity of sound<br>■ movement with velocity of sound<br>■ pressure and velocity distributions in pipe flow |

| Main area | Elements, keywords |
|---|---|
| Steady flow around bodies | ■ boundary layer, resistance of bodies in flow, pressure distribution<br>■ aerofoil: lift, forces, torques, aerodynamic coefficients |
| Flow measurement technology | ■ measuring pressure, velocity, temperature, flow rate and level |
| Free jets | ■ geometry of the outlet opening<br>■ velocity profile |
| Selected examples of transient flows | ■ transient flow in pipes and surge chambers<br>■ water hammer |
| Fluid energy machines | ■ turbomachines, positive-displacement pumps<br>■ pumps, turbines, fans |
| Numerical methods / flow simulation | ■ Finite Element Method (FEM)<br>■ application of Computational Fluid Dynamics (CFD) |
| Components in piping systems | ■ straight pipes, pipe fittings<br>■ shut-off valves and fittings, pumps |

# 1 Fundamentals of fluid mechanics

## Physics and properties of fluids

| | |
|---|---|
| **WL 202** Fundamentals of temperature measurement | 010 |
| **WL 203** Fundamentals of pressure measurement | 012 |
| **HM 150.02** Calibration of pressure gauges | 014 |
| **WL 102** Change of state of gases | 016 |
| **WL 204** Vapour pressure of water – Marcet boiler | 018 |

## Fundamentals of hydrostatics

| | |
|---|---|
| **Basic knowledge** Fundamentals of hydrostatics | 020 |
| **HM 115** Hydrostatics trainer | 022 |
| **HM 150.05** Hydrostatic pressure in liquids | 024 |
| **HM 150.06** Stability of floating bodies | 026 |
| **HM 150.39** Floating bodies for HM 150.06 | 028 |

## Fundamentals of hydrodynamics

| | |
|---|---|
| **Basic knowledge** Fundamentals of hydrodynamics | 030 |
| **HM 150.18** Osborne Reynolds experiment | 032 |
| **HM 150.07** Bernoulli's principle | 034 |
| **HM 150.08** Measurement of jet forces | 036 |
| **TM 605** Coriolis force | 038 |
| **HM 150.09** Horizontal flow from a tank | 040 |
| **HM 150.12** Vertical flow from a tank | 042 |
| **HM 150.14** Vortex formation | 044 |

## Flow in pipes

| | |
|---|---|
| **HM 150.01** Pipe friction for laminar / turbulent flow | 046 |
| **HM 150.29** Energy losses in piping elements | 048 |
| **HM 150.11** Losses in a pipe system | 050 |

## Methods of flow measurement

| | |
|---|---|
| **HM 150.13** Methods of flow measurement | 052 |

## Compact fluid mechanics: fluid tutor

| | |
|---|---|
| **Overview** HM 241 Fundamentals of water flow | 054 |
| **HM 241** Fundamentals of water flow | 056 |

## Turbomachines

| | |
|---|---|
| **HM 150.19** Operating principle of a Pelton turbine | 058 |
| **HM 150.20** Operating principle of a Francis turbine | 060 |
| **HM 150.04** Centrifugal pump | 062 |
| **HM 150.16** Series and parallel configuration of pumps | 064 |

## Flow around bodies

| | |
|---|---|
| **HM 150.10** Visualisation of streamlines | 066 |
| **HM 135** Determination of the settling velocity | 068 |

## Open-channel flow

| | |
|---|---|
| **Overview** Open-channel flow | 070 |
| **HM 150.03** Plate weirs for HM 150 | 072 |
| **HM 150.21** Visualisation of streamlines in an open channel | 074 |
| **HM 164** Open channel and closed channel flow | 076 |
| **Overview** HM 160 Experimental flume 86 x 300 mm | 078 |
| **HM 160** Experimental flume 86 x 300 mm | 080 |

## Accessory

| | |
|---|---|
| **Overview** Series HM 150 Introduction into the fundamentals of fluid mechanics | 082 |
| **HM 150** Base module for experiments in fluid mechanics | 084 |

# WL 202
## Fundamentals of temperature measurement

### Description

- **experimental introduction to temperature measurement: methods, areas of application, characteristics**
- **clearly laid out unit primarily for laboratory experiments, also suitable for demonstration purposes**

Recording temperature is one of the basic tasks in metrology. Electric temperature sensors are the most widely used in automation applications but conventional thermometer types are still widely applied in many areas. The WL 202 experimental setup covers the full range of temperature measurement methods. As well as non-electrical measuring methods, such as gas- and liquid-filled thermometers and bimetallic thermometers, all typical electric measuring methods are covered in the experiments. The electrically measured temperatures are displayed directly on programmable digital displays. A temperature-proportionate output voltage signal (0...10V) is accessible from lab jacks, enabling temperature characteristics to be recorded with, for example, a plotter.

For measuring the relative air humidity a psychrometer with two thermometers is available, one of the thermometers measures the dry bulb. The wet bulb thermometer is covered in a wet cotton cloth and measures the evaporative cooling. The temperature difference allows the relative air humidity to be determined.

A digital multimeter with precision resistors is used to calibrate the electrical measuring devices. Various heat sources or storage units (immersion heater, vacuum flask and laboratory heater) permit relevant temperature ranges to be achieved for the sensors being tested. A tool box houses the sensors, cables, temperature measuring strips and immersion heater.

### Learning objectives/experiments

- learning the fundamentals of temperature measurement by experimentation
- familiarisation with the various methods, their areas of application and special features
  - non-electrical methods: gas- and liquid-filled thermometers, bimetallic thermometers and temperature measuring strips
  - electric methods: thermocouple, resistance temperature detector Pt100, thermistor (NTC)
- determining air humidity with a psychrometer
- calibrating electric temperature sensors



# WL 202
## Fundamentals of temperature measurement

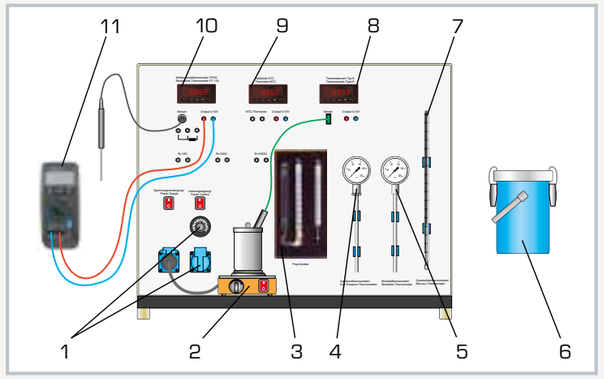


1 power-regulated socket, 2 laboratory heater for water and sand, 3 psychrometer to determine air humidity, 4 gas pressure thermometer, 5 bimetal thermometer, 6 vacuum flask, 7 mercury thermometer, 8 digital display, thermocouple type K, 9 digital display, thermistor (NTC), 10 digital display, Pt100, 11 multimeter

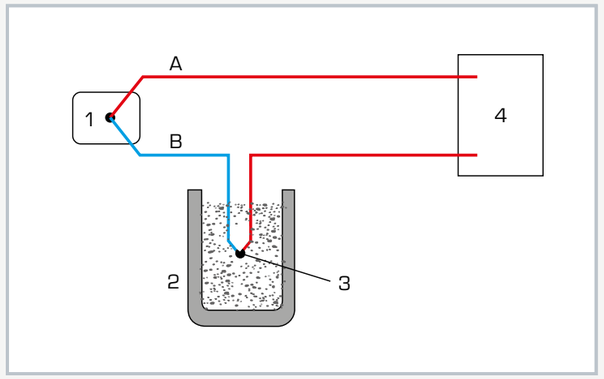


Temperature measurement with a thermocouple type K: A) nickel chrome, B) nickel; 1 measuring point, 2 tank at constant temperature, 3 reference point, 4 voltmeter

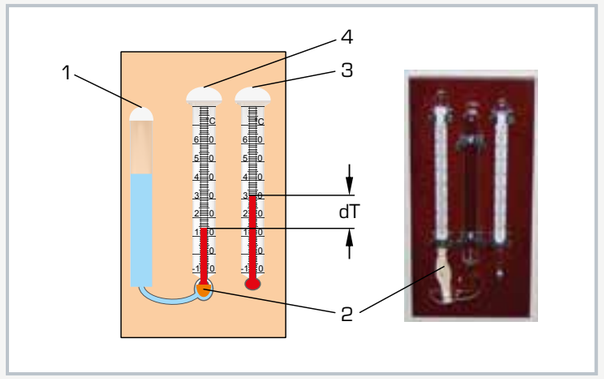


Psychrometer: 1 water tank, 2 wet cotton cloth for covering the wet bulb thermometer, 3 dry bulb thermometer, 4 wet bulb thermometer; dT temperature difference

### Specification

[1] experiments in the fundamentals of temperature measurement with 7 typical measuring devices
[2] various heat sources or storage units: laboratory heater, immersion heater, vacuum flask
[3] calibration units: precision resistors and digital multimeter
[4] liquid, bimetallic and gas pressure thermometers
[5] temperature sensors: Pt100, thermocouple type K, thermistor (NTC)
[6] various temperature measuring strips
[7] psychrometer for humidity measurement
[8] tool box for sensors, cables, measuring strips and immersion heater

### Technical data

Immersion heater
- power output: 300W
- adjustment of power feed via power-regulated socket

Laboratory heater with thermostat
- power output: 450W
- max. temperature: 425°C

Vacuum flask: 1L

Measuring ranges
- resistance temperature detector Pt100: 0...100°C
- thermocouple type K: 0...1000°C
- thermistor (NTC): 20...55°C
- liquid thermometer: -10...250°C
- bimetallic, gas pressure thermometer: 0...200°C
- temperature measuring strips: 29...290°C

Precision resistors: 10 Ω, 100 Ω, 1000 Ω
Psychrometer:
- 2x temperature: 0...60°C
- rel. humidity: 3...96%

230V, 50Hz, 1 phase
230V, 60Hz, 1 phase; 120V, 60Hz, 1 phase
UL/CSA optional
LxWxH: 800x450x650mm
Weight: approx. 45kg

### Scope of delivery

1 experimental unit
1 tool box
1 set of cables
1 laboratory heater
1 immersion heater
1 vacuum flask
1 digital multimeter
1 set of instructional material

# WL 203
## Fundamentals of pressure measurement

### Description

- **comparison of different pressure measurement methods**
- **measuring positive and negative pressure**
- **calibration device with Bourdon tube pressure gauge for calibrating mechanical manometers**

Measuring pressure is important in the engineering industry, e.g. in plant, turbomachine and aircraft construction and in process engineering. Other fundamental factors such as flow rate or flow velocity can also be determined based on a pressure measurement.

The WL 203 experimental unit enables the user to measure the pressure with two different measuring methods: directly by measuring the length of a liquid column (U-tube manometer, inclined tube manometer) and indirectly by measuring the change of shape of a Bourdon tube (Bourdon tube pressure gauge).

In a U-tube manometer, the pressure causes the liquid column to move. The pressure difference is read directly from a scale and is the measure for the applied pressure. In inclined tube manometers, one leg points diagonally up. A small height difference therefore changes the length of the liquid column significantly.

The principle of the Bourdon tube pressure gauge is based on the change in cross-section of the bent Bourdon tube under pressure. This change in cross-section leads to an expansion of the Bourdon tube diameter. A Bourdon tube pressure gauge is therefore an indirectly acting pressure gauge where the pressure differential is indicated via a transmission gearing and a pointer.

In experiments, pressures in the millibar range are generated with a plastic syringe and displayed on the manometers. The experimental unit is equipped with two Bourdon tube pressure gauges for measuring positive and negative pressure. The U-tube manometer, inclined tube manometer and Bourdon tube pressure gauges at the experimental unit can be combined using tubes. A calibration device enables calibration of an additional Bourdon tube pressure gauge using a weight-loaded piston manometer.

### Learning objectives/experiments

- familiarisation with 2 different measuring methods:
  - direct method with U-tube manometer and inclined tube manometer
  - indirect method with Bourdon tube pressure gauge
- principle of a Bourdon tube pressure gauge
- calibrating mechanical manometers



# WL 203
## Fundamentals of pressure measurement

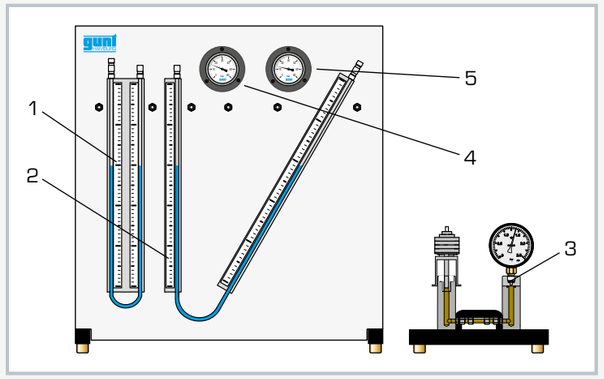


1 U-tube manometer, 2 inclined tube manometer, 3 calibration device with Bourdon tube pressure gauge, 4 Bourdon tube pressure gauge for positive pressure, 5 Bourdon tube pressure gauge for negative pressure

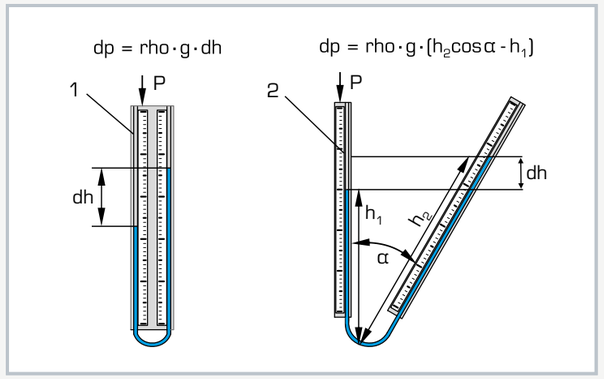


Principle of operation of liquid column manometers
1 U-tube manometer, 2 inclined tube manometer; dp pressure difference, dh height difference, rho density of measuring fluid, g acceleration of gravity

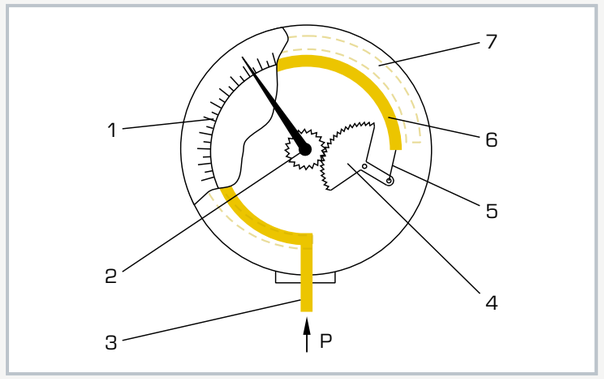


Principle of operation of a Bourdon tube pressure gauge
1 scale, 2 pointer, 3 Bourdon tube fixed in place, 4 gearing, 5 tie rod, 6 Bourdon tube without pressure, 7 Bourdon tube expanded under pressure

### Specification

[1] basic experiments for measuring pressure with three different measuring instruments
[2] U-tube and inclined tube manometer
[3] one Bourdon tube pressure gauge each for positive and negative pressure
[4] plastic syringe generates test pressures in the millibar range
[5] calibration device with Bourdon tube pressure gauge for calibrating mechanical manometers

### Technical data

Inclined tube manometer
- angle: 30°

Measuring ranges
- pressure:
  - 0...±60mbar (Bourdon tube pressure gauge)
  - 0...500mmWC (U-tube manometer)
  - 0...500mmWC (inclined tube manometer)

LxWxH: 750x610x810mm
LxWxH: 410x410x410mm (calibration device)
Total weight: approx. 40kg

### Scope of delivery

1 experimental unit
1 calibration device
1 set of weights
1 oil, 500mL
1 ink, 30mL
1 funnel
1 syringe
1 set of hoses
1 set of instructional material

# HM 150.02
## Calibration of pressure gauges

### Description

- **operation of a Bourdon tube pressure gauge and a piston manometer**

In the field of metrology, calibration describes a process for detecting deviations in a measuring instrument compared to a reference instrument or universally accepted standard value. This observed deviation is taken into account in the subsequent use of the calibrated measuring instrument and adjusted if necessary.

HM 150.02 is a device designed as an introduction to the basics of checking and calibrating a manometer.

A piston manometer is connected to a Bourdon tube pressure gauge via a pipe. Piston manometers are especially suited to producing well-defined pressures in liquids or gases and have been used for years as one of the most accurate methods for calibrating pressure gauges.

A defined force is produced by loading the piston with weights. The ratio of force / piston cross-sectional area results in a defined test pressure. Hydraulic oil is used to transfer the force. If the pressure in the system rises, the force acts against the spring of the Bourdon tube pressure gauge. The test pressure that is produced can be read on the manometer's transparent dial. The spring mechanism – and thus the way in which the Bourdon tube pressure gauge works – is clearly visible through the transparent dial.

Loading the calibrated piston manometer with weights produces a very accurate, reproducible calibration pressure, which can be used to check and calibrate the manometer.

### Learning objectives/experiments

- working principle of a Bourdon tube pressure gauge
- calibrate manometers, read off applied pressure
- determine systematic errors
- principle of operation and working with a piston manometer



# HM 150.02
## Calibration of pressure gauges

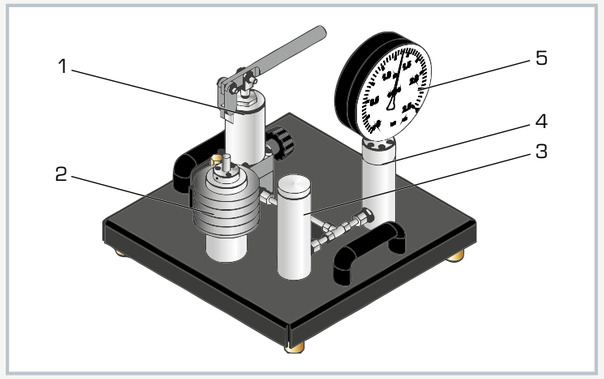


1 hydraulic pump with storage tank, 2 load weights on mount, 3 piston manometer, 4 Bourdon tube pressure gauge, 5 transparent dial

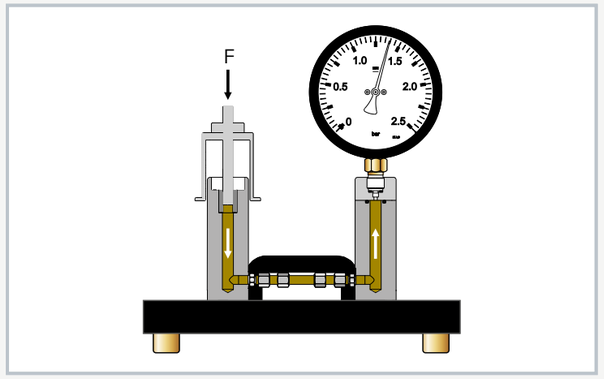


Load and pressure measurement unit are connected to each other via a pipe; when the piston is loaded the pressure in the system rises and acts against the spring on the manometer; F weight force

### Specification

[1] Bourdon tube pressure gauge for pressure measurement
[2] transparent dial face with a view of the spring mechanism
[3] accurately fitting piston and cylinder of the piston manometer without seals
[4] hydraulic oil for transfer of the force
[5] hydraulic pump with storage tank and bleed mechanism

### Technical data

Piston manometer
- pressure piston: diameter: 12mm
- hydraulic cylinder: diameter: 25mm, length=225mm
- oil: ISO viscosity grade: VG 32

Set of weights
- weight holder: 385g / 0,334bar
- 1x 193g / 0,166bar
- 4x 578g / 0,5bar

Measuring ranges
- pressure: 0...2,5bar

LxWxH: 400x400x400mm
Weight: approx. 16kg

### Scope of delivery

1 experimental unit
1 set of weights
1 oil (500mL)
1 set of instructional material

# WL 102
## Change of state of gases

### Description

- **isothermal and isochoric change of state of air**
- **GUNT software for acquisition, processing and display of measured data**

Gas laws belong to the fundamentals of thermodynamics and are dealt with in every training course on thermodynamics.

The WL 102 experimental unit enables two changes of state to be studied experimentally: isothermal change of state, also known as the Boyle-Mariotte law, and isochoric change of state, which occurs at constant volume. Transparent tanks enable the change of state to be observed. Air is used as the test gas.

In the first tank, positioned on the left, the hermetically enclosed air volume is reduced or increased using a compressor and hydraulic oil. This results in an isothermal change of state. The compressor can also operate as a vacuum pump. If the changes occur slowly, the change of state takes place at an almost constant temperature.

In the second tank, positioned on the right, the temperature of the test gas is increased by a controlled electric heater and the resulting pressure rise is measured. The volume of the enclosed gas remains constant. Temperatures, pressures and volumes are measured electronically, digitally displayed and transferred to a PC for processing.

### Learning objectives/experiments

- demonstrating the laws of state changes in gases experimentally
- isothermal change of state, Boyle-Mariotte law
- isochoric change of state, Gay-Lussac's 2nd law



# WL 102
## Change of state of gases

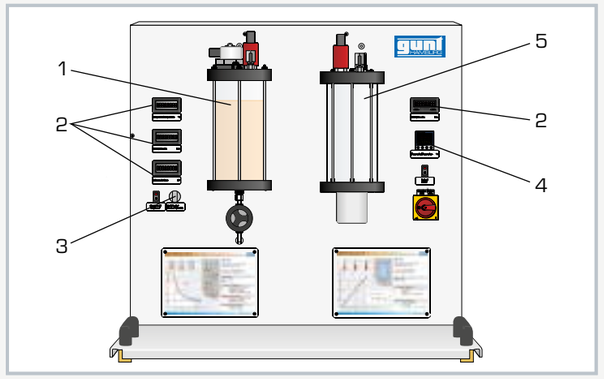


1 tank 1 for isothermic change of state, 2 digital displays, 3 5/2-way valve for switching between compression and expansion, 4 heating controller, 5 tank 2 for isochoric change of state

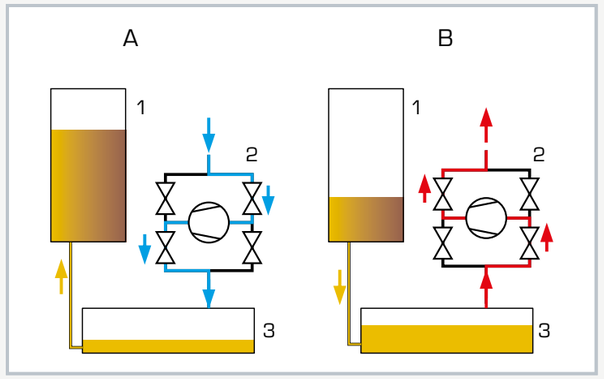


Representation of the change of volume
1 oil-filled tank for isothermic change of state, 2 valve arrangement with compressor, 3 storage tank; A compression (blue), B expansion (red)

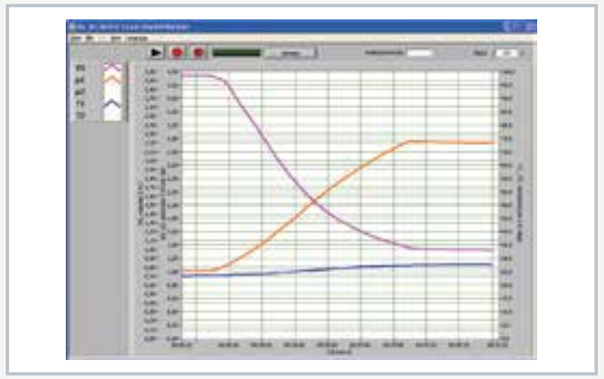

Software screenshot: charts for isothermic compression

### Specification

[1] experimental investigation of gas laws
[2] transparent measuring tank 1 for investigation of isothermic change of state
[3] hydraulic oil filling for changing volume of test gas
[4] built-in compressor generates necessary pressure differences to move the oil volume
[5] compressor can also be used as vacuum pump
[6] 5/2-way valve for switching between compression and expansion
[7] transparent measuring tank 2 for investigation of isochoric change of state
[8] electrical heater with temperature control in tank 2
[9] sensors and digital displays for temperatures, pressures and volumes
[10] GUNT software for data acquisition via USB under Windows 7, 8.1, 10

### Technical data

Compressor / vacuum pump
- power output: 60W
- pressure at inlet: 213mbar
- pressure at outlet: 2bar

Temperature controller: PID, 300W, limited to 80°C

Measuring ranges
temperature:
- tank 1: 0...80°C
- tank 2: 0...80°C

pressure:
- tank 1: 0...4bar absolute
- tank 2: 0...2bar absolute

volume:
- tank 1: 0...3L

230V, 50Hz, 1 phase
230V, 60Hz, 1 phase; 120V, 60Hz, 1 phase
UL/CSA optional
LxWxH: 900x550x900mm
Weight: approx. 50kg

### Required for operation

PC with Windows recommended

### Scope of delivery

1 experimental unit
1 GUNT software CD + USB cable
1 set of instructional material

# WL 204
## Vapour pressure of water - Marcet boiler

### Learning objectives/experiments

- recording the vapour pressure curve of water
- presentation of the relationship between pressure and temperature in a closed system
- temperature and pressure measurement
- influence of foreign gases (air) on the pressure

### Description

- **recording the vapour pressure curve of water**
- **saturation pressure of water vapour as a function of the temperature**

In a closed system filled with fluid, a thermodynamic equilibrium sets in between the fluid and its vaporised phase. The prevailing pressure is called vapour pressure. It is substance-specific and temperature-dependent.

When a fluid is heated in a closed tank, the pressure increases as the temperature rises. Theoretically, the pressure increase is possible up to the critical point at which the densities of the fluid and gaseous phases are equal. Fluid and vapour are then no longer distinguishable from each other. This knowledge is applied in practice in process technology for freeze drying or pressure cooking.

The WL 204 experimental unit can be used to demonstrate the relationship between the pressure and temperature of water in a straightforward manner. Temperatures of up to 200°C are possible for recording the vapour pressure curve. The temperature and pressure can be continuously monitored via a digital temperature display and a Bourdon tube pressure gauge.

A temperature limiter and pressure relief valve are fitted as safety devices and protect the system against overpressure.



# WL 204
## Vapour pressure of water - Marcet boiler

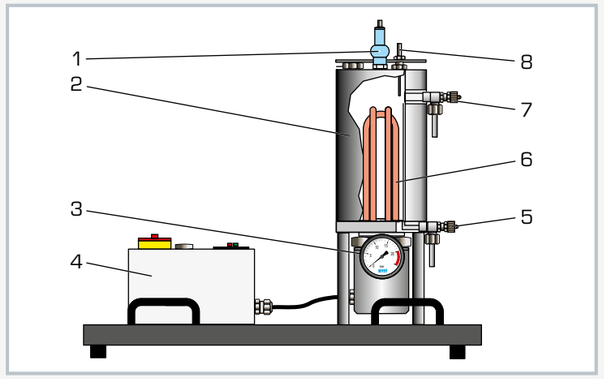


1 safety valve, 2 pressure boiler with insulating jacket, 3 Bourdon tube pressure gauge, 4 switch cabinet with temperature display, 5 drain valve, 6 heater, 7 overflow, 8 temperature sensor

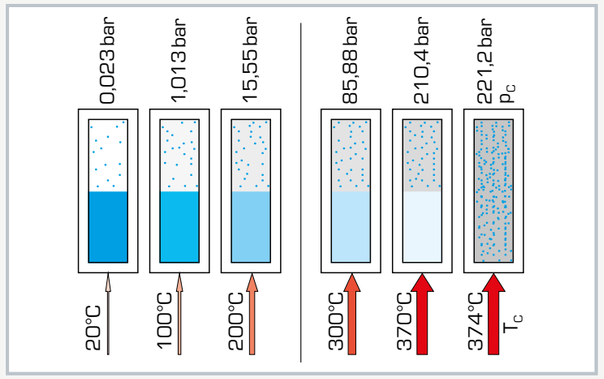


Heating up water in a closed tank: the pressure and temperature increase proportionally up to the critical point, at which fluid and vapour are no longer distinguishable from each other; critical point at $T_c$=374°C, $p_c$=221bar, dotted line: temperature limit of the experimental unit

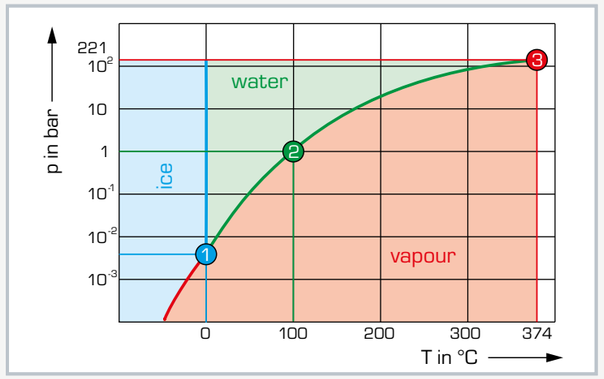


Temperature-pressure diagram of water
red: sublimation curve, green: boiling point curve, blue: melting point curve; 1 triple point, 2 boiling point, 3 critical point

### Specification

[1] measuring a vapour pressure curve for saturated vapour
[2] pressure boiler with insulating jacket
[3] temperature limiter and safety valve protect against overpressure in the system
[4] Bourdon tube pressure gauge to indicate pressure
[5] digital temperature display

### Technical data

Bourdon tube pressure gauge: -1...24bar
Temperature limiter: 200°C
Safety valve: 20bar
Heater: 2kW
Boiler, stainless steel: 2L

Measuring ranges
- temperature: 0...200°C
- pressure: 0...20bar

230V, 50Hz, 1 phase
230V, 60Hz, 1 phase
120V, 60Hz, 1 phase
UL/CSA optional
LxWxH: 600x400x680mm
Weight: approx. 35kg

### Scope of delivery

1 experimental unit
1 funnel
1 set of tools
1 set of instructional material

Basic knowledge

# Fundamentals of hydrostatics

Hydrostatics is the study of fluids at rest. The experimental units from GUNT cover the basic principles of the following topics from the field of hydrostatics: hydrostatic pressure, buoyancy, surface tension, capillarity/adhesion.

**Physics and properties of fluids**

- pressure measurement with manometers and pressure sensors
- temperature measurement
- vapour pressure curve
- change of state of the gases

**Forces**

- Coriolis force
- surface tension and forces
- buoyancy forces
- hydrostatic pressure and resultant forces

## Hydrostatic pressure

The pressure in fluids at rest does not depend on the direction. It is linearly dependent on the amount of fluid over the element being studied, or the diving depth respectively.

The hydrostatic pressure for incompressible fluids that are not subject to gravity is calculated according to Pascal's law.

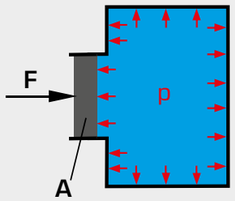


### Pascal's law

The effect of a force **F** on a motionless liquid generates a pressure **p** within the liquid, which at any point acts equally in all directions. The pressure always acts perpendicular to the boundary surface **A** of the liquid.

All force and pressure processes in liquids are based on this law.

$$p = F / A$$

## Hydrostatic paradox

The hydrostatic pressure generates a force **F** on the area **A**. If these areas are equal, this force only depends on the level **h**; the shape of the vessel is irrelevant.

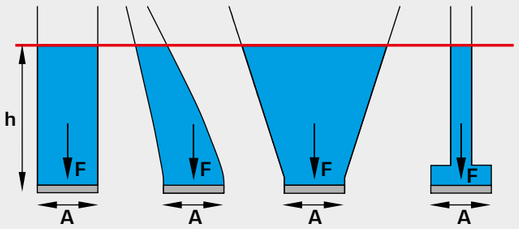


**h** level, **F** force, **A** area, **red line** level

## Communicating vessels

Communicating vessels are tubes that are open at the top and interconnected at the bottom. Regardless of the shape and size of the tubes, the level of the fluid in them is the same.

Applications include water levels, locks and drain traps in sewers.

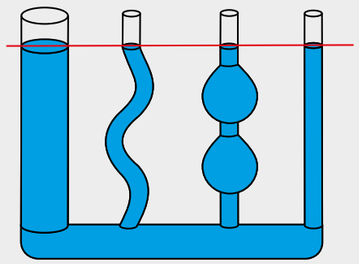

## Hydrostatic pressure on walls

In addition to the ground pressure of a fluid, it is often important to also know the hydrostatic pressure on boundary surfaces, for example in order to calculate the forces acting on the side walls (channels, aquariums etc.) or on weirs.

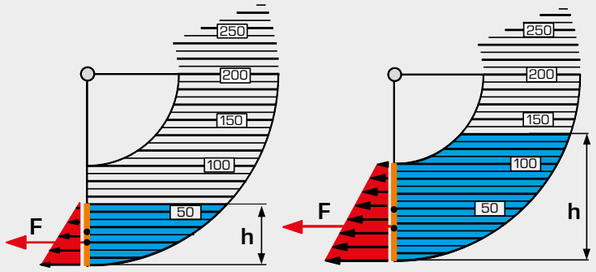


**h** level, **F** resultant force, **A** effective area,
pressure profile, water level

## Capillarity

Liquids in capillaries rise or fall due to molecular forces between the liquid and the wall or between the liquid and air. The height of rise in the capillary depends on the surface tension and the diameter of the capillary.

In wetting liquids (e.g. water) the surface level in the capillary rises. In non-wetting liquids (e.g. mercury) the level falls.

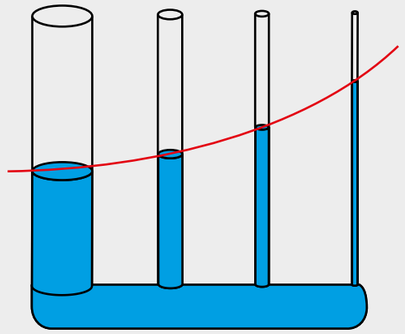

## Stability of floating bodies

In order to be able to assess whether a body floats stably or could capsize, it is necessary to determine its metacentre **M**. The location of the metacentre depends on the centre of gravity of the displaced water **A** and the angle of heel. The body floats stably when the metacentre **M** is located above the centre of gravity **S**. Then the restoring moment $M_d$ has a 'righting' effect.

The distance between the centre of gravity and the metacentre is known as the metacentric height **z**.

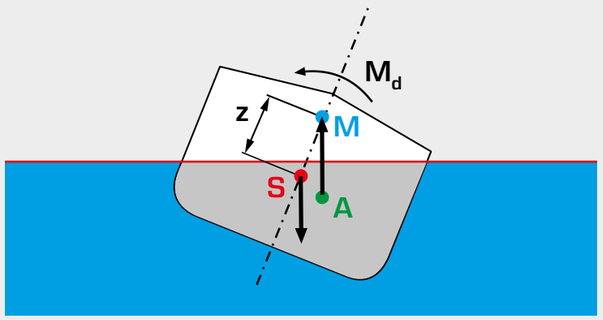


**M** metacentre, **S** centre of gravity,
**A** centre of buoyancy, **z** metacentric height,
$M_d$ restoring moment that straightens the floating body back up,
**red line** water level

# HM 115
## Hydrostatics trainer

The illustration shows a similar unit.

### Description

- **basic experiments in hydrostatics**
- **wide range of experiments**
- **closed water circuit with tank and pump**

Hydrostatics is the study of fluids at rest. Phenomena occurring as a result of hydrostatic pressure are analysed and the force effect determined. Hydrostatic aspects play a crucial role in various areas of engineering, such as in plumbing and domestic engineering, in pump manufacturing, in aerospace and in shipping (buoyancy, load on the sides of a ship).

The HM 115 trainer can be used to conduct experiments in the field of hydrostatics, such as ground pressure measurement or demonstrating Boyle's law. Determining the centre of pressure completes the range of experiments. Furthermore, experimental units for studying capillarity and buoyancy are included. The hydrostatic pressure and surface tension are measured. Additionally, one experiment uses a Pitot tube and a tube for static pressure to study the pressure components in a flowing fluid.

To make the functions and processes visible, the tanks and the experimental units use a transparent design. Tanks and pipes are made entirely of plastic.

Various pressure gauges are available for measuring pressure and differential pressure of the liquid fluid, such as a Pitot tube, tube for static pressure a pressure sensor with digital display, twin tube manometers or a differential pressure manometer. A diaphragm manometer and a Bourdon tube manometer indicate the pressure of the gaseous fluid.

The trainer has its own air and water supply. The closed water circuit includes a supply tank with submersible pump. A compressor is included to generate positive and negative pressures for the experiments with air.

### Learning objectives/experiments

- study of buoyancy on a variety of bodies
- study of the density of liquids
- hydrostatic pressure, Pascal's law
- communicating vessels
- determination of the centre of pressure
- study of surface tensions
- demonstration of capillarity
- Boyle's law
- study of static and dynamic pressure component in flowing fluid
- familiarisation with various methods of pressure measurement



# HM 115
## Hydrostatics trainer

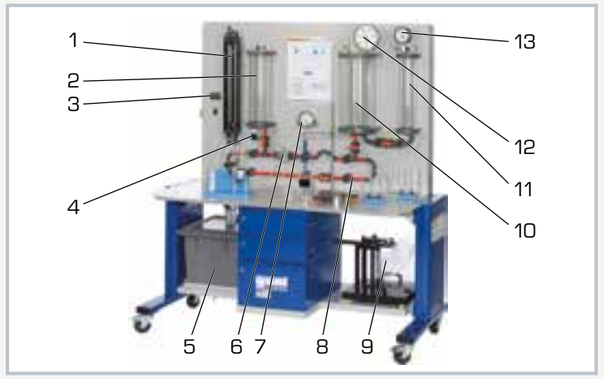


1 twin tube manometers, 2 tank, 3 digital pressure display, 4 pressure sensor, 5 supply tank with submersible pump, 6 Pitot tube and tube for static pressure, 7 differential pressure manometer, 8 pipe section, 9 hydrostatic pressure in liquids, 10 pressure vessel, 11 pressure vessel, 12 Bourdon tube manometer, 13 diaphragm manometer

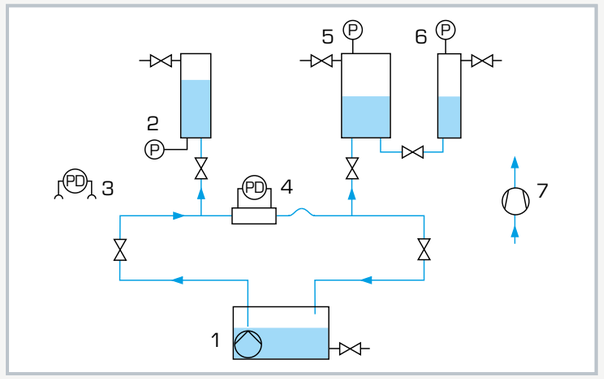


1 supply tank with submersible pump, 2 tank with pressure sensor, 3 twin tube manometers, 4 Pitot tube + tube for static pressure with differential pressure manometer, 5 pressure vessel with Bourdon tube manometer, 6 pressure vessel with diaphragm manometer, 7 compressor; P pressure, PD differential pressure

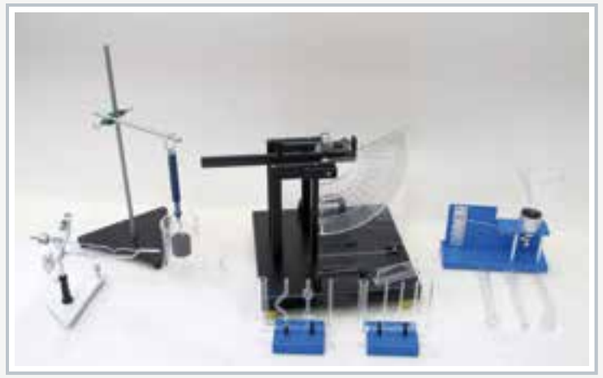

Accessories for a wide range of experiments

### Specification

[1] comprehensive experimental introduction to hydrostatics
[2] transparent tank for observing the processes
[3] wide range of accessories included: compressor for generating positive and negative pressures, bottom pressure apparatus, two areometers
[4] 1 experimental unit each: measuring the buoyancy force, investigation of the hydrostatic pressure in liquids, measuring the surface tension, communicating vessels, capillarity
[5] Pitot tube for determining the total pressure and tube for static pressure
[6] instruments: pressure sensor with digital display, differential pressure manometer, twin tube manometers, diaphragm manometer, Bourdon tube manometer

### Technical data

Pump
- power consumption: 250W
- max. flow rate: $9m^3/h$
- max. head: 7,6m

Compressor
- power: 65W
- pressure at inlet: 240mbar
- pressure at outlet: 2bar

3 tanks
- height: 500mm
- Ø 100mm, Ø 133mm, Ø 200mm

Supply tank for water: approx. 50L

2 areometers with different measuring ranges

Measuring ranges
- pressure: 2x -1...1,5bar
- differential pressure: 0...500mmWC
- differential pressure: 0...0,4bar
- density: 1x 0,8...1g/$cm^3$, 1x 1...1,2g/$cm^3$

230V, 50Hz, 1 phase
230V, 60Hz, 1 phase; 120V, 60Hz, 1 phase
UL/CSA optional
LxWxH: 1760x820x1940mm
Weight: approx. 270kg

### Scope of delivery

1 trainer
1 compressor
1 bottom pressure device
2 areometers
1 wedge-shaped tank
1 experimental unit each: surface tension, hydrostatic pressure in fluids, buoyancy force, capillarity, communicating vessels
1 set of instructional material

# HM 150.05
## Hydrostatic pressure in liquids

### Description

- **determination of forces on surfaces under hydrostatic pressure**

The weight of fluids at rest causes a pressure that is known as hydrostatic pressure or gravitational pressure. This pressure acts on any area that is in communication with the fluid, exerting a force that is proportional to the size of the area.

The effect of hydrostatic pressure is highly important in many fields of engineering: in shipbuilding, in hydraulic engineering when designing locks and weirs, in sanitation and building services.

The HM 150.05 experimental unit offers typical experiments to study hydrostatic pressure in liquids at rest. The effect of the hydrostatic pressure of water can be clearly shown at different water levels and angles of inclination.

The experimental unit consists of a transparent, tilting water tank with a scale for measuring volumes. Another scale is used to adjust the angle of inclination of the water tank. The device is balanced by a lever arm using different weights and the compressive force measured.

### Learning objectives/experiments

- pressure distribution along an effective area in a liquid at rest
- lateral force of the hydrostatic pressure
- determination of the centre of pressure and centre of area
- determination of the resulting compressive force



# HM 150.05
## Hydrostatic pressure in liquids

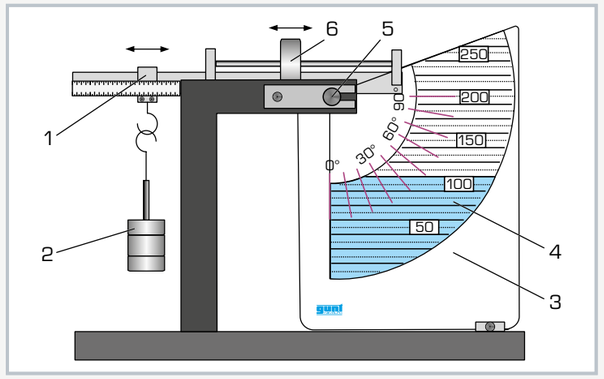


1 hanger with scale, 2 weights, 3 transparent plastic disc with angular and fill level scale, 4 water tank, 5 axis of rotation, 6 movable weight

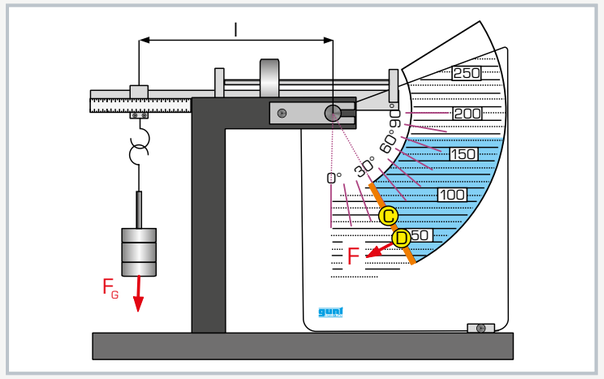


Measuring principle for different inclination angles of the water tank:
blue: water level, orange: effective area; F force, $F_G$ weight, l lever arm of the weight, C centre of gravity of the area, D centre of pressure

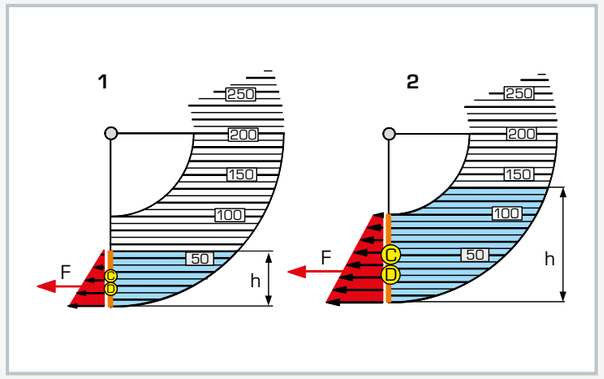


Pressure profiles at different water levels: 1 water level less than 100mm, 2 water level greater than 100mm; red: pressure profiles, orange: effective area; F force, h water level, C centre of area of the area, D centre of pressure

### Specification

[1] investigation of the hydrostatic pressure in fluids at rest
[2] tiltable water tank with fill level scale
[3] lever arm with different weights

### Technical data

Water tank
- inclination angle: 0°...90°
- content: 0...1,8L
- scale: 0...250mm
- effective area, max. 75x100mm

Lever arm
- max. length 250mm

Weights
- 1x 2,5N
- 1x 2N
- 2x 1N
- 1x 0,5N

LxWxH: 400x500x450 mm
Weight: approx. 12kg

### Scope of delivery

1 experimental unit
1 set of weights
1 set of tools
1 set of instructional material

# HM 150.06
## Stability of floating bodies

### Learning objectives/experiments

- study and determination of
  - buoyancy, centre of buoyancy
  - centre of gravity, metacentre, stability
  - heel

### Description

- **stability of a floating body**
- **determining the metacentre**
- **other floating bodies with different shapes of frame optionally available, HM 150.39**

In hydrostatics, the metacentre is an important point to be considered when assessing the stability of floating bodies. Stability refers to the ability of a ship to right itself from a heeled position. The metacentre is the intersection of the buoyancy vector and the vessel's axis of symmetry at a certain heel.

The HM 150.06 unit can be used to study the stability of a floating body and to determine the metacentre graphically. In addition, the buoyancy of the floating body can also be determined. The experiment is easy to set up and is particularly suitable for practical work in small groups.

The experiment is conducted in a tank filled with water. A transparent body with a rectangular frame cross-section is used as the floating body. Clamped weights that can be moved horizontally and vertically make it possible to adjust the centre of gravity and the heel.

The position of the clamped weights can be read on scales. A clinometer indicates the heel.

The accessory HM 150.39 is available as an optional extra for further experiments with different frame shapes.



HM 150.06
Stability of floating bodies

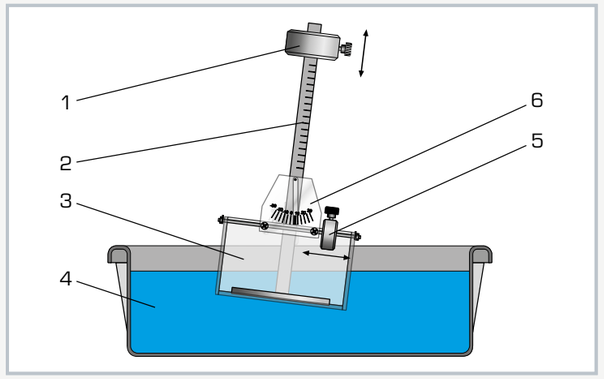


1 adjustment of the centre of gravity, 2 scale, 3 floating body, 4 tank with water, 5 adjustment of the heel, 6 clinometer with scale

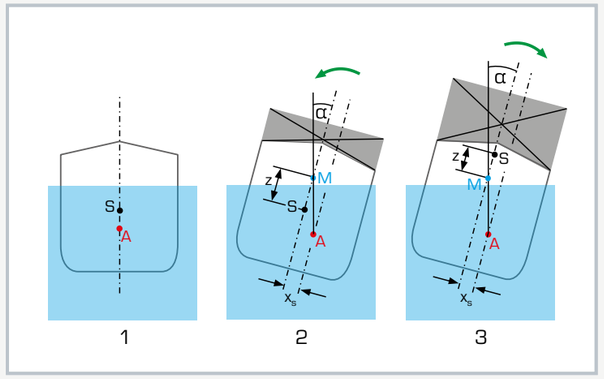


1 stable position, 2 stable position despite load, metacentre above the centre of gravity, 3 unstable position due to load, metacentre under the centre of gravity; green arrow: restoring moment, M metacentre, S centre of gravity, A centre of buoyancy, z metacentric height, α angle of heel

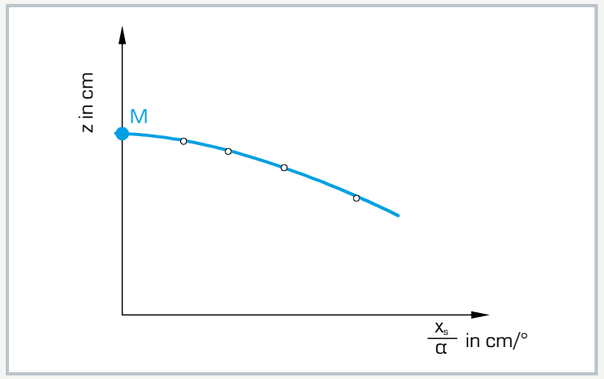


Graphical determination of the metacentre: M metacentre, z vertical centre of gravity, $x_s/\alpha$ stability gradient

### Specification

[1] investigating the stability of a floating body and determining the metacentre
[2] transparent floating body with rectangular frame cross-section
[3] one horizontally movable clamped weight for adjusting the heel
[4] one vertically movable clamped weight for adjusting the centre of gravity
[5] clinometer with scale for displaying the heel
[6] other floating bodies with different shapes of frame available as accessories: HM 150.39

### Technical data

Floating body
- LxWxH: 300x130x190mm
- mast height: 400mm

Horizontal scale: 180mm
Vertical scale: 400mm
Height scale of the floating body: 120mm
Clinometer scale: ±35°

Weights
- floating body without clamped weights: approx. 2,7kg
- vertical clamped weight: 575g
- horizontal clamped weight: 196g

Tank for water: 50L

LxWxH: 660x450x220mm (tank)
Weight: approx. 6kg

### Scope of delivery

1 experimental unit
1 set of instructional material

# HM 150.39
## Floating bodies for HM 150.06

### Description

- **stability of floating bodies with different frame shapes**

The HM 150.39 accessory includes two transparent floating bodies with different frame shapes (hard chine and round bilge). The floating bodies are used together with HM 150.06 and extend this device's range of experiments.

The design of the floating bodies and the possible experiments are similar to those of HM 150.06.

### Learning objectives/experiments

- comparison of two different frame shapes: hard chine and round bilge

### Specification

[1] determination of the metacentre of 2 floating bodies with different frame shapes: hard chine, and round bilge
[2] each floating body fitted with a horizontally movable clamped weight for adjusting the heel
[3] each floating body fitted with a vertically movable clamped weight for adjusting the centre of gravity
[4] each floating body fitted with a clinometer with scale for displaying the heel
[5] for use with HM 150.06

### Technical data

Hard chine frame
- LxWxH: 300x200x140mm
- mast height: 200mm

Round bilge frame
- LxWxH: 300x200x100mm
- mast height: 240mm

Horizontal scale: 180mm
Vertical scale: 240mm
Height scale of the floating body: 120mm
Clinometer scale: ±35°

Weights
- floating body without clamped weights
  - hard chine: approx. 2,9kg
  - round bilge: approx. 2,4kg
- vertical clamped weight: 575g
- horizontal clamped weight: 196g

LxWxH: 330x220x290mm (hard chine)
LxWxH: 330x220x280mm (round bilge)
Total weight: approx. 7kg

### Scope of delivery

2 floating bodies
1 manual

# Training for laboratory and teaching staff

## Just as important as reliable and modern equipment

We provide support that is perfectly tailored to your needs:

- **general handling of the equipment**
- **how the equipment and its components work**
- **safety instructions for operating the equipment**
- **aspects of commissioning, starting the equipment and its maintenance**
- **introduction to the software (if available)**
- **explanation of the various experiments and details about the operating manual**

Our experienced team is available at any time, anywhere.

Get in touch!

Basic knowledge

# Fundamentals of hydrodynamics

Hydrodynamics is concerned with the study and description of fluids in motion. The main emphasis is the teaching of the conservation laws of mass, energy and momentum.

Flowing fluids possess kinetic energy. This energy can be converted into potential energy (pressure, height) and vice versa.

Typical keywords include Bernoulli's equation, continuity equation and conservation of momentum. For ease of understanding, it is mostly steady states of incompressible fluids that are considered.

Other topics within hydrodynamics

- pipe flow (laminar/turbulent)
- methods of flow rate measurement
- open-channel flow
- flow around bodies
- turbomachines
- flow of compressible fluids

## Flow from a tank

The flow from a tank can be regarded as both steady and transient. In the steady case the fill level, and thus the width of the jet, remains constant (e.g. discharge under a weir). The outlet velocity only depends on the head **h** and is calculated according to Torricelli's law.

$$v = \sqrt{2gh}$$

**v** velocity, **g** gravitational acceleration,
**h** distance between discharge and water level

When the tank is emptying during the discharge process, it is in what is referred to as the transient state.

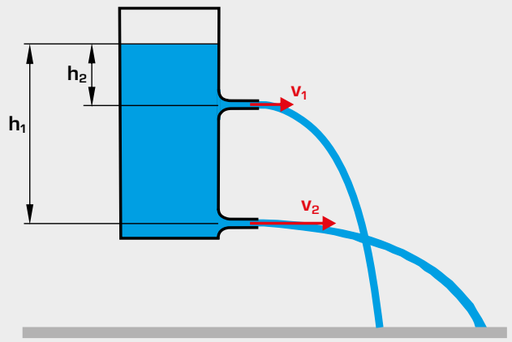


**h** head, distance between discharge and water level, **v** velocity

## Venturi nozzle

The velocity of the flowing fluid is at its greatest at the narrowest cross-section (**continuity equation** A·v = const). Bernoulli discovered that a part of the pressure energy is converted into kinetic energy. When velocity increases it therefore results in a drop in pressure, so that the lowest pressure occurs in the narrowest cross-section. **Bernoulli's equation** states that the energy of a frictionless flowing, incompressible fluid is constant.

Applications include water jet pumps, carburettors, flow measurement

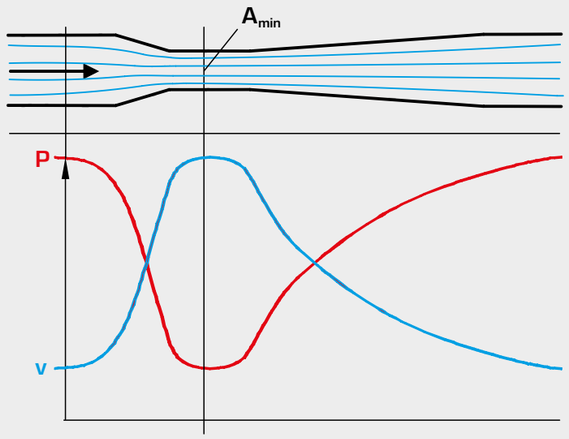


velocity, static pressure curve

## Jet forces

If the flow velocity changes then the momentum of a fluid changes according to the magnitude and/or direction. This results in forces that, for example, could drive a free jet turbine or a water vehicle.

These forces can be easily demonstrated and measured when the jet hits the wall and is deflected.

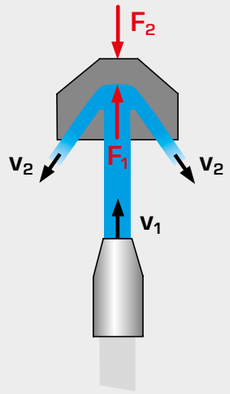


**$F_1$** jet force, **$F_2$** reaction force,
**$v_1$** jet velocity, **$v_2$** velocity after deflection

## Pressure in a flowing fluid

The energy of the flowing fluid is determined by pressure, velocity and density. The total pressure is made up of a static and a dynamic component. The dynamic component grows quadratically as the flow velocity increases. A flowing fluid can contain potential, kinetic and pressure energy. In the ideal case the total energy is conserved. In this case, the proportions may vary, so for example pressure energy is converted into kinetic energy.

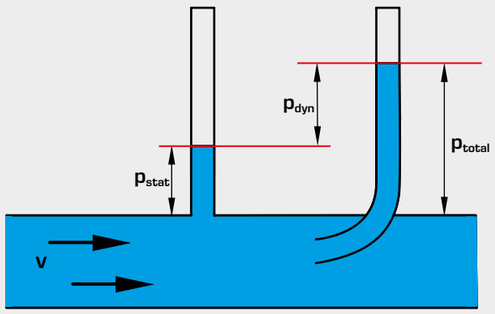


**v** velocity, **$p_{stat}$** static pressure, **$p_{dyn}$** dynamic pressure,
**$p_{total}$** total pressure

## Vortex formation

Vortices occur when, within a fluid, a portion of the fluid flows more quickly than the rest of the fluid. This results in a velocity gradient within the fluid. Energy is dissipated in vortices.

Free vortices (potential vortex, e.g. whirlpool) are formed during discharge from a tank, for example. With free vortices all fluid particles move in concentric circular paths without rotating around their own axis. Free vortices are formed solely by hydrodynamic forces.

Forced vortices are rotational and are formed by external forces, such as a stirrer.

# HM 150.18
## Osborne Reynolds experiment

### Learning objectives/experiments

- visualisation of laminar flow
- visualisation of the transition zone
- visualisation of turbulent flow
- determination of the critical Reynolds number

### Description

- **visualisation of laminar and turbulent flow**
- **determining the critical Reynolds number**
- **traditional experiment based on the model of the British physicist Osborne Reynolds**

The Osborne Reynolds experiment is used to display laminar and turbulent flows. During the experiment it is possible to observe the transition from laminar to turbulent flow after a limiting velocity. The Reynolds number is used to assess whether a flow is laminar or turbulent.

With HM 150.18 the streamlines during laminar or turbulent flow are displayed in colour with the aid of an injected contrast medium (ink). The experimental results can be used to determine the critical Reynolds number.

The experimental unit consists of a transparent pipe section through which water flows, with flow-optimised inlet. A valve can be used to adjust the flow rate in the pipe section. Ink is injected into the flowing water. A layer of glass beads in the water tank ensures an even and low-turbulence flow.

The experimental unit is positioned easily and securely on the work surface of the HM 150 base module. The water is supplied and the flow rate measured by HM 150. Alternatively, the experimental unit can be operated by the laboratory supply.



HM 150.18
Osborne Reynolds experiment

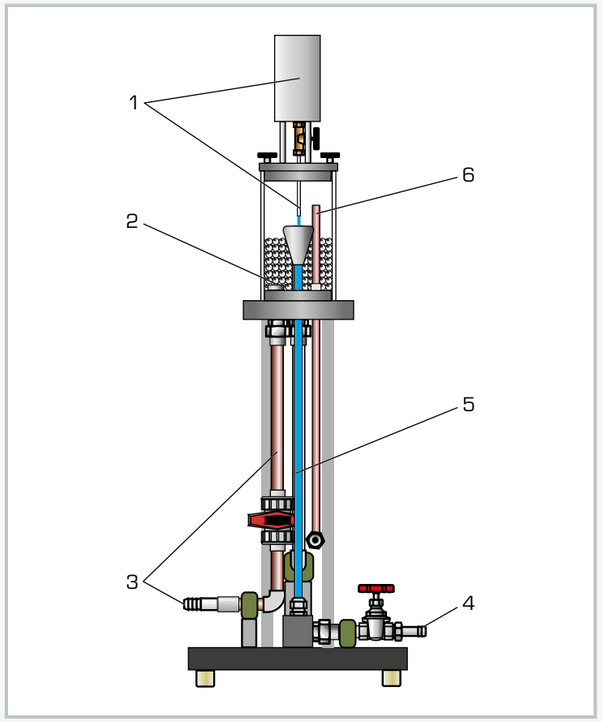


1 tank for ink with inlet pipe, 2 overflow, 3 water supply, 4 water drain, 5 pipe section with valve, 6 water tank with glass beads

Flow conditions from left to right: laminar flow, transition from laminar to turbulent flow, turbulent flow

### Specification

[1] visualisation of laminar and turbulent flow in the Osborne Reynolds experiment
[2] water as flowing medium and ink as contrast medium
[3] vertical glass pipe section
[4] water tank with glass beads to stabilise the flow
[5] flow rate in the pipe section can be adjusted via a valve
[6] flow rate determined by HM 150 base module
[7] water supply using HM 150 base module or via laboratory supply

### Technical data

Water tank
- capacity: 2200mL

Pipe section
- length: 675mm
- inside diameter: 10mm

Tank for ink
- capacity: approx. 250mL

LxWxH: 400x400x1140mm
Weight: approx. 16kg

### Required for operation

HM 150 (closed water circuit) or water connection, drain

### Scope of delivery

1 experimental unit
1 bag of glass beads
1 ink (1L)
1 set of instructional material

# HM 150.07
## Bernoulli's principle

### Description

- **investigation and verification of Bernoulli's principle**
- **static pressures and total pressure distribution along the Venturi nozzle**
- **determination of the flow coefficient at different flow rates**

Bernoulli's principle describes the relationship between the flow velocity of a fluid and its pressure. An increase in velocity leads to a reduction in pressure in a flowing fluid, and vice versa. The total pressure of the fluid remains constant. Bernoulli's equation is also known as the principle of conservation of energy of the flow.

The HM 150.07 experimental unit is used to demonstrate Bernoulli's principle by determining the pressures in a Venturi nozzle.

The experimental unit includes a pipe section with a transparent Venturi nozzle and a movable Pitot tube for measuring the total pressure. The Pitot tube is located within the Venturi nozzle, where it is displaced axially. The position of the Pitot tube can be observed through the Venturi nozzle's transparent front panel.

The Venturi nozzle is equipped with pressure measuring points to determine the static pressures. The pressures are displayed on the six tube manometers. The total pressure is measured by the Pitot tube and displayed on another single tube manometer.

The experimental unit is positioned easily and securely on the work surface of the HM 150 base module. The water is supplied and the flow rate measured by HM 150. Alternatively, the experimental unit can be operated by the laboratory supply.

### Learning objectives/experiments

- energy conversion in divergent/convergent pipe flow
- recording the pressure curve in a Venturi nozzle
- recording the velocity curve in a Venturi nozzle
- determining the flow coefficient
- recognising friction effects



# HM 150.07
## Bernoulli's principle

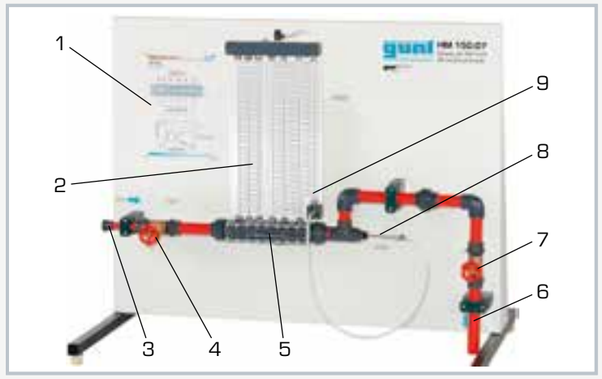


1 diagram, 2 tube manometers (static pressures), 3 water supply, 4 valve, 5 Venturi nozzle, 6 water outlet, 7 valve for water outlet, 8 Pitot tube, 9 single tube manometer (total pressure)

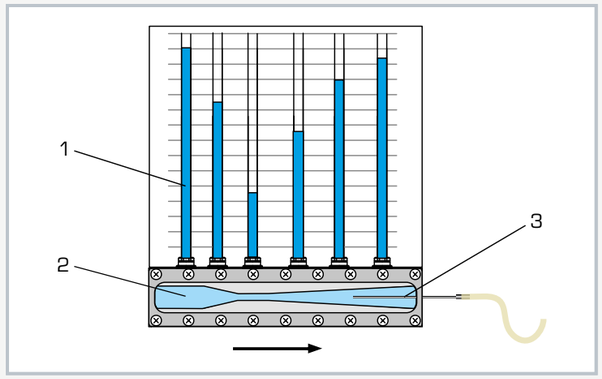


Measuring the pressures in a Venturi nozzle
1 tube manometers for displaying the static pressures, 2 Venturi nozzle with measuring points, 3 Pitot tube for measuring the total pressure, axially movable

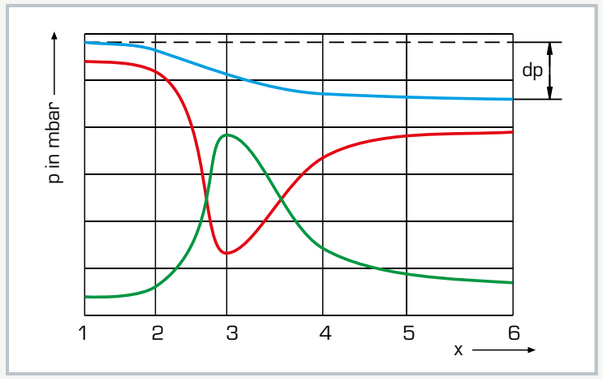


Pressure curve in the Venturi nozzle: blue: total pressure, red: static pressure, green: dynamic pressure; x pressure measuring points, p pressure

### Specification

[1] familiarisation with Bernoulli's principle
[2] Venturi nozzle with transparent front panel and measuring points for measuring the static pressures
[3] axially movable Pitot tube for determining the total pressure at various points within the Venturi nozzle
[4] 6 tube manometers for displaying the static pressures
[5] single tube manometer for displaying the total pressure
[6] flow rate determined by HM 150 base module
[7] water supply using HM 150 base module or via laboratory supply

### Technical data

Venturi nozzle
- A: 84...338mm$^2$
- angle at the inlet: 10,5°
- angle at the outlet: 4°

Pitot tube
- movable range: 0...200mm
- diameter: 4mm

Pipes and pipe connectors: PVC

Measuring ranges
- pressure:
  - 0...290mmWC (static pressure)
  - 0...370mmWC (total pressure)

LxWxH: 1100x680x900mm
Weight: approx. 28kg

### Required for operation

HM 150 (closed water circuit) or water connection, drain

### Scope of delivery

1 experimental unit
1 set of instructional material

# HM 150.08
## Measurement of jet forces

### Learning objectives/experiments

- demonstration of the principle of linear momentum
- study of the jet forces
- influence of flow rate and flow velocity
- influence of different deflection angles

### Description

- **investigation of jet forces on deflectors**
- **demonstration of the principle of linear momentum**
- **four interchangeable deflectors with different deflection angles**

During deceleration, acceleration and deflection of a flowing fluid, there is a change of velocity and thus a change in momentum. Changes in momentum result in forces. In practice, the motive forces are used to convert kinetic energy into work done, for example in a Pelton turbine.

In HM 150.08 jet forces are generated and studied with the aid of a water jet that acts on and is diverted by an interchangeable deflector.

The experimental unit includes a transparent tank, a nozzle, four interchangeable deflectors with different deflection angles and a weight-loaded scale. The force of the water jet is adjusted via the flow rate.

Experiments study the influence of flow velocity and flow rate as well as of different deflection angles. The jet forces generated by the water jet are measured on the weight-loaded scale. The forces are calculated using the momentum equation and compared with the measurements.

The experimental unit is positioned easily and securely on the work surface of the HM 150 base module. The water is supplied and the flow rate measured by HM 150. Alternatively, the experimental unit can be operated by the laboratory supply.



HM 150.08
Measurement of jet forces

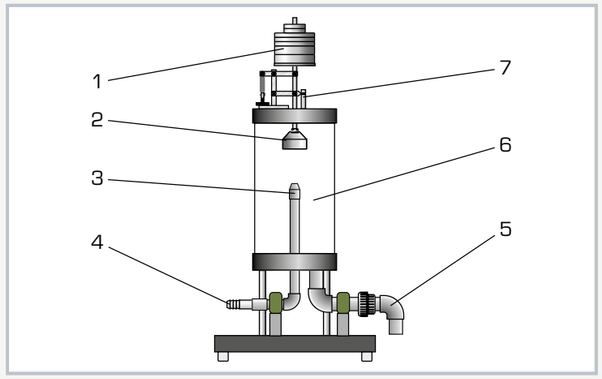


1 weight, 2 deflector, 3 nozzle, 4 water supply, 5 water drain, 6 tank, 7 lever apparatus

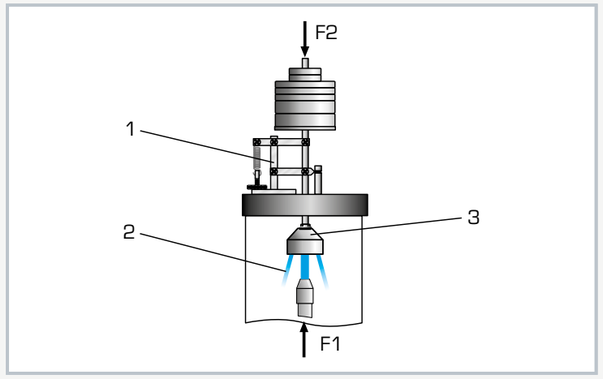


Measurement of the jet forces via the weight-loaded scale
1 lever apparatus, 2 deflected water jet, 3 deflector with conical surface; F1 jet force, F2 weight force

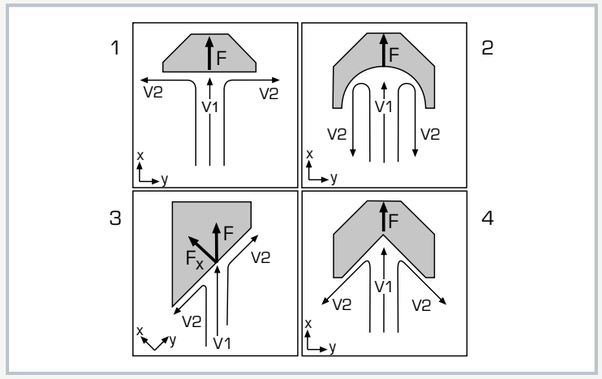


Distribution of velocities v and forces F on deflectors
1 deflector with flat surface, 2 deflector with semi-circular surface, 3 deflector with oblique surface, 4 deflector with conical surface

### Specification

[1] investigation of jet forces and demonstration of the principle of linear momentum
[2] tank made of transparent material for observing the experiments
[3] nozzle for generating the water jet
[4] jet force can be adjusted via flow rate
[5] four different shaped deflectors: flat surface, oblique surface, semi-circular surface, conical surface
[6] measurement of the jet forces via the weight-loaded scale
[7] flow rate determined by HM 150 base module
[8] water supply using HM 150 base module or via laboratory supply

### Technical data

Tank
- inner diameter: 200mm
- height: 340mm

Nozzle
- diameter: 10mm

Deflector
- flat surface: 90°
- oblique surface: 45°/135°
- semi-circular surface: 180°
- conical surface: 135°

Weights
- 4x 0,2N
- 3x 0,3N
- 2x 1N
- 2x 2N
- 2x 5N

LxWxH: 400x400x880mm
Weight: approx. 23kg

### Required for operation

HM 150 (closed water circuit) or water connection, drain

### Scope of delivery

1 experimental unit
1 set of weights
4 deflectors
1 set of instructional material

# TM 605
## Coriolis force

### Description

- **visualisation of the Coriolis force effect**
- **rotating reference system**
- **water jet as moving mass**

When a mass moves relative to the reference system within a rotating reference system, this movement is deflected. This deflection is caused by the Coriolis force, an apparent or inertial force. The Coriolis force plays a crucial role in meteorology and physical oceanography, since it influences the course of air and water currents due to the Earth's rotation.

In engineering, the Coriolis force occurs when a rotational motion interferes with a further movement of the same object. This can occur for example in cranes, gearboxes or robots.

The TM 605 experimental unit is designed to clearly demonstrate the effect of the Coriolis force in a rotating reference system. A transparent water tank with submersible pump is placed on a rotatable arm and then rotated. Within the rotating reference system, the pump produces a water jet in a radial direction. Depending on the flow rate of the pump or the water velocity, as well as speed and direction of rotation, the water jet is visibly deflected due to the Coriolis force. The degree of deflection can be determined by means of a scale on the water tank. The speed is continuously adjustable, electronically controlled and digitally displayed.

### Learning objectives/experiments

- inertial or apparent force
- interference of a rotational movement on a translational movement
- visualisation of the Coriolis force effect



TM 605
Coriolis force

1 pump, 2 water tank, 3 speed display, 4 switch for direction of rotation, 5 speed adjustment, 6 rotating arm, 7 water jet

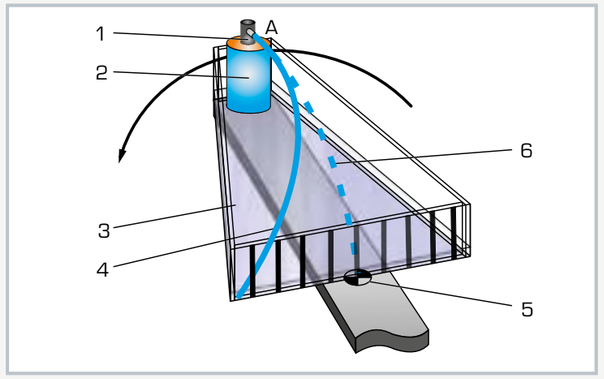


1 nozzle for water jet, 2 pump, 3 tank, 4 deflected water jet, 5 pivot point of the arm, 6 water jet with a stationary arm, 7 direction of rotation; A starting point of the moving mass

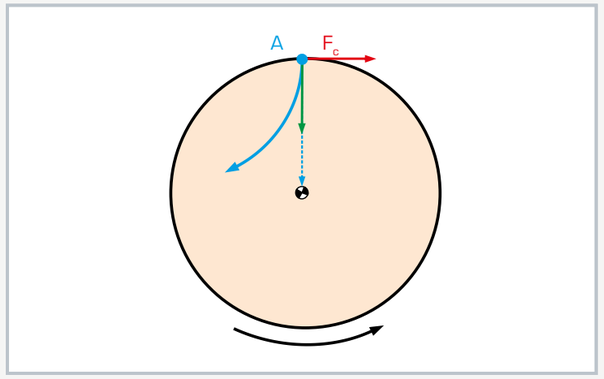


Effect of the Coriolis force: A starting point of the moving mass, $F_c$ Coriolis force; orange: rotating reference frame, red: direction of the Coriolis force, green: current motion of the mass, dashed blue: direction of movement without rotation, blue: actual direction of movement with rotation

### Specification

[1] visualisation of the Coriolis force effect
[2] rotating reference frame consisting of transparent water tank with submersible pump on a rotating arm
[3] deflection of a water jet in radial direction dependent on the speed and direction of rotation
[4] scale to read the deflection of the water jet
[5] closed water circuit
[6] speed sensor with digital display

### Technical data

Rotating arm
- continuously adjustable speed: 0...60min$^{-1}$
- adjustable direction of rotation

Submersible pump
- flow rate: 10L/min

230V, 50Hz, 1 phase
230V, 60Hz, 1 phase; 120V, 60Hz, 1 phase
UL/CSA optional
LxWxH: 420x400x320mm
Weight: approx. 25kg

### Scope of delivery

1 experimental unit
1 set of tools
1 set of instructional material

# HM 150.09
## Horizontal flow from a tank

### Description

- **visualisation of the trajectory of the outlet jet**
- **study of openings with different diameters and contours**
- **determination of the contraction coefficient**

Hydrodynamics considers the relationship between the trajectory, the outlet contour and the outlet velocity during flow from tanks. These considerations have practical applications in hydraulic engineering or in the design of bottom outlets in dams, for example.

HM 150.09 allows a user to study and visualise the profile of a water jet. Additionally, the contraction coefficient can be determined as a characteristic for different contours.

The experimental unit includes a transparent tank, a point gauge and a panel for visualising the jet paths. An interchangeable insert is installed in the tank's water outlet to facilitate the investigation of various openings. Four inserts with different diameters and contours are provided along with the unit.

To visualise the trajectory, the issued water jet is measured via a point gauge that consists of movable rods. The rods are positioned depending on the profile of the water jet. This results in a trajectory that is transferred to the panel.

The tank contains an adjustable overflow and a scale. In this way, a precise adjustment and accurate reading of the fill level are possible. The experimental unit is positioned easily and securely on the work surface of the HM 150 base module. The water is supplied and the flow rate measured by HM 150. Alternatively, the experimental unit can be operated by the laboratory supply.

### Learning objectives/experiments

- recording the trajectory of the water jet at different outlet velocities
- study of how the level in the tank affects the outlet velocity
- determination of the contraction coefficient for different contours and diameters
- comparison of the actual and theoretical outlet velocity

# HM 150.09
## Horizontal flow from a tank

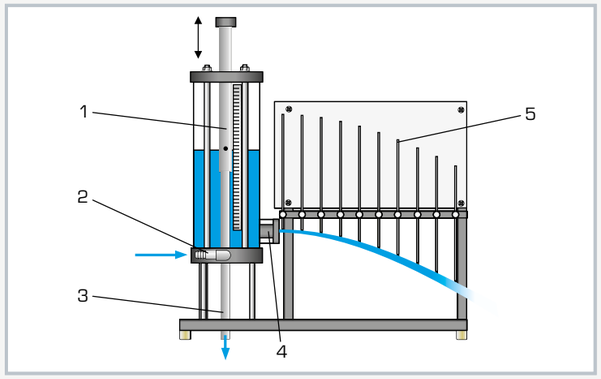


1 tank with adjustable overflow, 2 water supply, 3 water overflow, 4 water outlet, 5 point gauge for the water jet

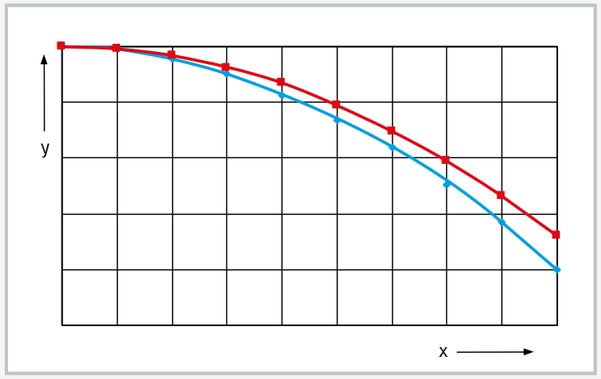


Measured and calculated (theoretical) trajectory of the outlet jet;
red: theoretical, blue: measured

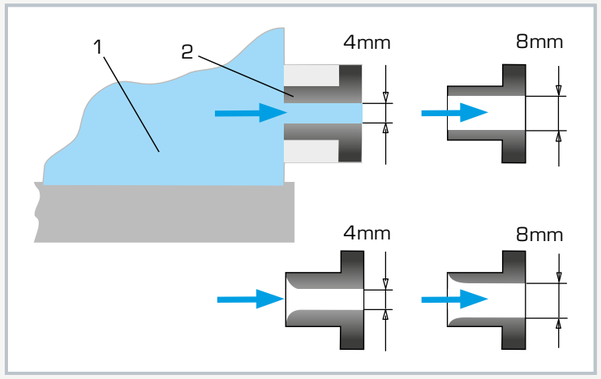


Interchangeable inserts to study different openings
1 tank, 2 insert; top: outlet from the tank through square contour,
bottom: outlet from the tank through rounded contour

### Specification

[1] study of horizontal flows from tanks
[2] determining the contraction coefficient for different outlet contours and diameters
[3] tank with adjustable overflow and scale
[4] four interchangeable inserts with different diameters and contours
[5] point gauge with eight movable rods for visualisation of the jet path
[6] white panel for recording the trajectory
[7] flow rate determined by HM 150 base module
[8] water supply using HM 150 base module or via laboratory supply

### Technical data

Tank
- height: 510mm
- diameter: 190mm
- contents: approx. 13,5L

Inserts with rounded contour
- 1x diameter: 4mm
- 1x diameter: 8mm

Inserts with square contour
- 1x diameter: 4mm
- 1x diameter: 8mm

Point gauge, 8 movable rods
- length: 350mm

LxWxH: 865x640x590mm
Weight: approx. 27kg

### Required for operation

HM 150 (closed water circuit) or water connection, drain

### Scope of delivery

1 experimental unit
4 inserts
1 set of instructional material

# HM 150.12
## Vertical flow from a tank

### Learning objectives/experiments

- study of the outlet jet (diameter, velocity)
- determination of pressure losses and contraction coefficient for different outlet contours
- determination of flow rate at different discharge heads

### Description

- **determination of the diameter and velocity of the outlet jet**
- **study of openings with different inlet and outlet contours**
- **determining the contraction coefficient**

Pressure losses in the flow from tanks are essentially the result of two processes: the jet deflection upon entry into the opening and the wall friction in the opening. As a result of the pressure losses the real discharge is smaller than the theoretical flow rate.

HM 150.12 determines these losses at different flow rates. Different diameters as well as inlet and outlet contours of the openings can be studied. Additionally, the contraction coefficient can be determined as a characteristic for different contours.

The experimental unit includes a transparent tank, a measuring device as well as a Pitot tube and twin tube manometers. An interchangeable insert is installed in the tank's water outlet to facilitate the investigation of various openings. Five inserts with different diameters, inlet contours and outlet contours are provided along with the unit.

The issued water jet is measured using a measuring device. A Pitot tube detects the total pressure of the flow. The pressure difference (read on the manometer) is used to determine the velocity.

The tank is fitted with an adjustable overflow and a measuring point for static pressure. In this way, the level can be precisely adjusted and read on the manometer. The experimental unit is positioned easily and securely on the work surface of the HM 150 base module. The water is supplied and the flow rate measured by HM 150. Alternatively, the experimental unit can be operated by the laboratory supply.



HM 150.12
Vertical flow from a tank

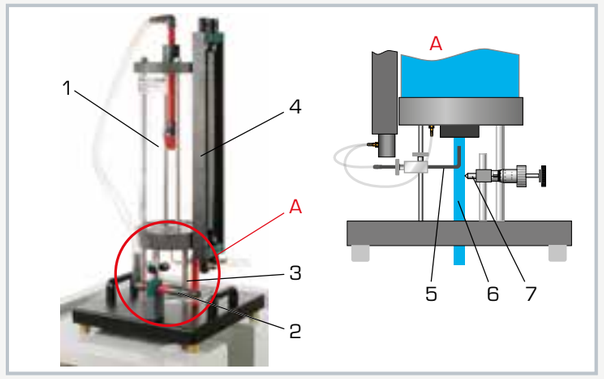


1 inlet strainer, 2 water connection, 3 overflow, 4 twin tube manometers, 5 Pitot tube, 6 water jet, 7 measuring device for jet diameter

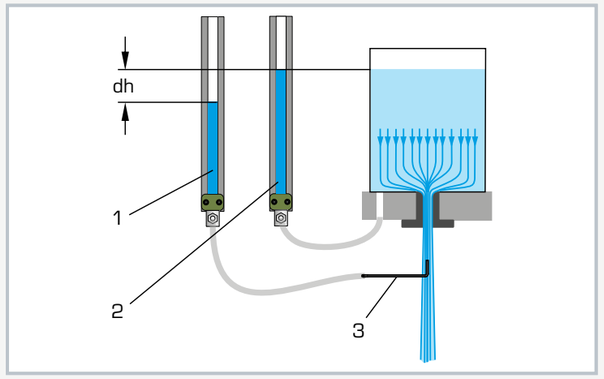


Measuring the pressures: 1 total pressure in the free jet, 2 static pressure in the tank, 3 Pitot tube; dh loss due to conversion of pressure into velocity

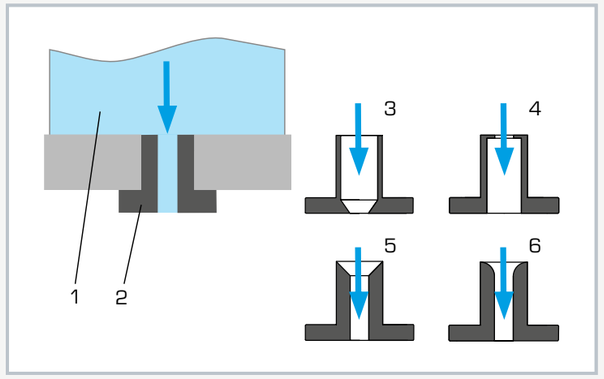


Interchangeable inserts to study different inlet and outlet contours
1 tank, 2 insert with cylindrical hole, 3 insert with conical outlet, 4 insert with orifice plate at the inlet, 5 insert with conical inlet, 6 insert with rounded inlet

### Specification

[1] study of pressure losses in vertical flows from tanks
[2] determining the contraction coefficient for different contours and diameters
[3] tank with adjustable overflow
[4] 5 interchangeable inserts with different contours
[5] measuring device for determining the jet diameter
[6] Pitot tube for determining the total pressure
[7] pressure display on twin tube manometers
[8] flow rate determined by HM 150 base module
[9] water supply using HM 150 base module or via laboratory supply

### Technical data

Tank
- capacity: approx. 13L
- overflow height: max. 400mm
- max. flow rate: 14L/min

Inserts
Inside diameters: $d_1$=inlet, $d_2$=outlet
- 1x cylindrical hole, d=12mm
- 1x outlet from the insert: cone $d_1$=24mm, $d_2$=12mm
- 1x inlet to the insert: orifice plate $d_1$=24mm, $d_2$=12mm
- 1x inlet to the insert: cone $d_1$=30mm, $d_2$=12mm
- 1x inlet to the insert: rounded, d=12mm

Measuring ranges
- pressure: 500mmWS
- jet radius: 0...10mm

LxWxH: 400x400x830mm
Weight: approx. 18kg

### Required for operation

HM 150 (closed water circuit) or water connection, drain

### Scope of delivery

1 experimental unit
5 inserts
1 set of hoses
1 set of instructional material

# HM 150.14
## Vortex formation

### Learning objectives/experiments

- visualisation of various vortices
- investigation of free and forced vortices
- representation of surface profiles
- determination of velocity

### Description

- **generation and investigation of free and forced vortices**
- **different inserts for the water drain**
- **impeller for generating a forced vortex**

In fluid dynamics, a vortex is a circular flow of a fluid caused by sufficiently large velocity gradients. In practice, this can be observed when water flows out of a basin into a pipe or when two fluids with different speeds meet each other.

The HM 150.14 experimental unit allows you to produce and study free and forced vortices.

The experimental unit has a transparent tank with nozzles, various inserts on the water drain, an impeller and a point gauge for detecting the vortex profiles.

To form the free vortex, water is introduced radially into the tank and flows through a ring to slow down. The vortex is created by the flow out of the tank. There are four easily replaceable inserts of various diameters available for the drain.

To form a forced vortex, the water is introduced tangentially. The vortex is generated via an impeller driven by a water jet.

The point gauges are used to measure the surface profiles of the vortices. The speed of the vortex is also determined.

The experimental unit is positioned easily and securely on the work surface of the HM 150 base module. The water is supplied and the flow measured by HM 150. Alternatively, the experimental unit can be operated by the laboratory supply.



# HM 150.14
## Vortex formation

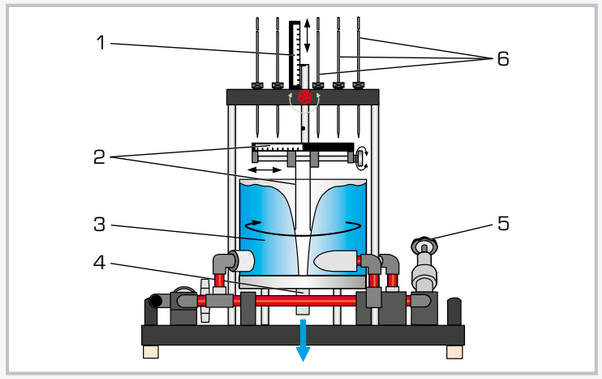


1 scale for measuring height, 2 point gauge with scale for measuring vortex radii, 3 free vortex, 4 water drain, 5 valve for water drain, 6 point gauge for measuring height of the vortex surface

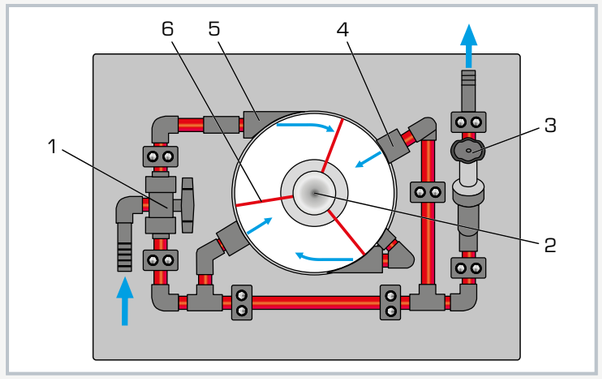


Plan view of the experimental unit: 1 valve for selecting tangential/radial water inlet, 2 water drain, 3 valve for water drain, 4 nozzle for radial water supply, 5 nozzle for tangential water supply, 6 impeller

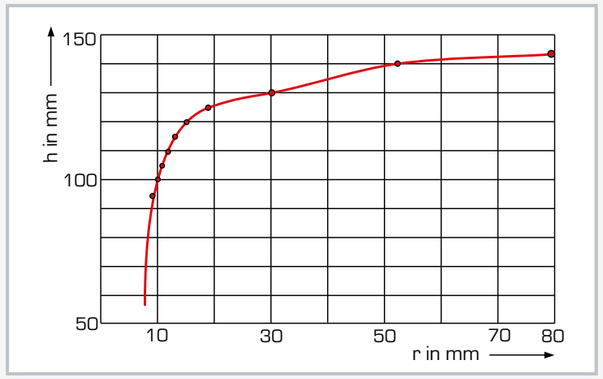


Surface profile of a free vortex: r radius, h height

### Specification

[1] generation and investigation of vortices
[2] transparent tank allows visualisation of vortex formation
[3] two nozzles for radial water supply (free vortex)
[4] two nozzles for tangential water supply (forced vortex)
[5] different inserts for the water drain to generate free vortex
[6] impeller for generating a forced vortex
[7] point gauges detect the surface profile
[8] flow rate determined by HM 150 base module
[9] water supply using HM 150 base module or via laboratory supply

### Technical data

Tank
- diameter: 250mm
- height: 190mm

4 inserts for the water drain
- diameter: 8, 12, 16 and 24mm

Impeller with 3 blades
Vertical point gauge
- 6 movable rods

Horizontal point gauge
- 2 movable rods

Measuring tube, movable
- horizontal 0...90mm, vertical 70...190mm
- diameter: 4mm

LxWxH: 640x400x675mm
Weight: approx. 18kg

### Required for operation

HM 150 (closed water circuit) or water connection, drain

### Scope of delivery

1 experimental unit
4 inserts for the water drain
1 impeller
1 set of instructional material

# HM 150.01
## Pipe friction for laminar / turbulent flow

### Learning objectives/experiments

- measurements of the pressure loss in laminar flow
- measurements of the pressure loss in turbulent flow
- determining the critical Reynolds number
- determining the pipe friction factor
- comparing the actual pipe friction factor with the theoretical friction factor

### Description

- **pipe friction losses in laminar and turbulent flow**
- **determining the critical Reynolds number**

During flow through pipes, pressure losses occur due to internal friction and friction between the fluid and the wall. When calculating pressure losses, we need to know the friction factor, a dimensionless number. The friction factor is determined with the aid of the Reynolds number, which describes the ratio of inertia forces to friction forces.

HM 150.01 enables the study of the relationship between pressure loss due to fluid friction and velocity in the pipe flow. Additionally, the pipe friction factor is determined.

The experimental unit includes a small diameter pipe section in which the laminar and turbulent flow is generated. The Reynolds number and the pipe friction factor are determined from the flow rate and pressure loss. In turbulent flow, the pipe is supplied directly from the water supply. The constant pressure at the water supply required for laminar flow is provided by a standpipe on the overflow. Valves can be used to adjust the flow rate.

The pressures in laminar flow are measured with twin tube manometers. In turbulent flow, the pressure is read on a dial-gauge manometer.

The experimental unit is positioned easily and securely on the work surface of the HM 150 base module. The water is supplied and the flow rate measured by HM 150. Alternatively, the experimental unit can be operated by the laboratory supply.



HM 150.01
Pipe friction for laminar / turbulent flow

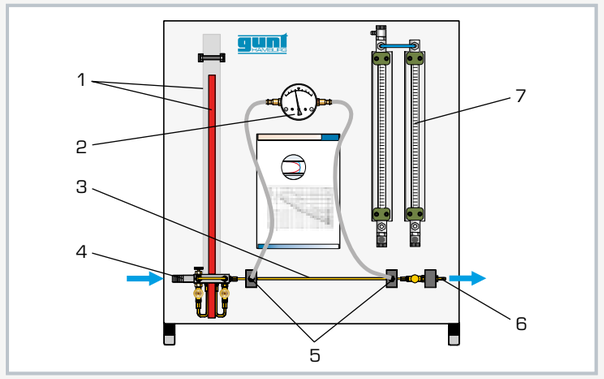


1 tank with overflow, 2 dial-gauge manometer, 3 pipe section, 4 water supply, 5 pressure measuring points, 6 water drain, 7 twin tube manometers

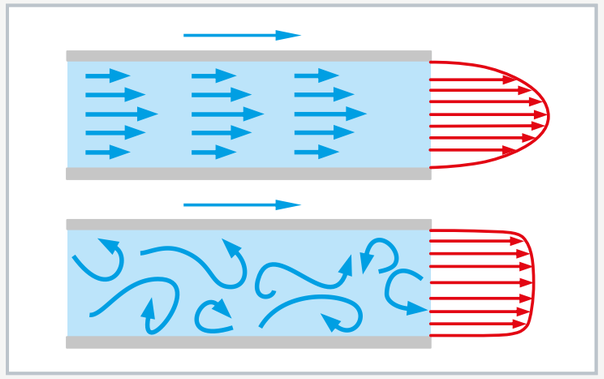

Representation of the laminar and turbulent flow in the pipe
top: laminar flow; bottom: turbulent flow; blue flow, red velocity profile

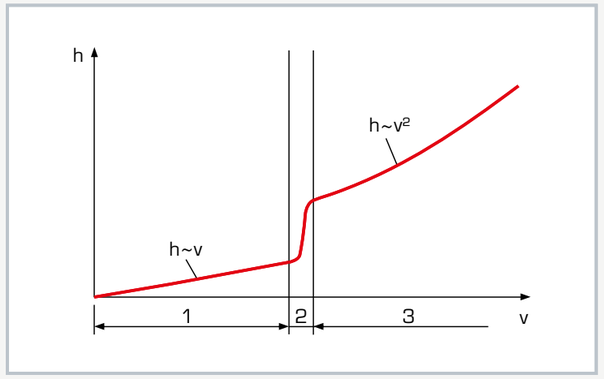


Pressure losses as a function of velocity in pipe flow
1 laminar flow, 2 transition from laminar to turbulent, 3 turbulent flow;
h pressure loss, v velocity

### Specification

[1] investigation of the pipe friction in laminar or turbulent flow
[2] transparent tank with overflow ensures constant water inlet pressure in the pipe section for experiments with laminar flow
[3] water supply via HM 150 or via laboratory supply for experiments with turbulent flow
[4] flow rate adjustment via valves
[5] twin tube manometers for measurements in laminar flow
[6] dial-gauge manometer for measurements in turbulent flow
[7] flow rate determined by HM 150 base module
[8] water supply using HM 150 base module or via laboratory supply

### Technical data

Pipe section
- length: 400mm
- inside diameter: 3mm

Tank: approx. 2L

Measuring ranges
- differential pressure:
  - 2x 370mmWS
  - 1x 0...0,4bar

LxWxH: 850x680x930mm
Weight: approx. 23kg

### Required for operation

HM 150 (closed water circuit) or water connection, drain

### Scope of delivery

1 experimental unit
1 set of instructional material

# HM 150.29
## Energy losses in piping elements

### Learning objectives/experiments

- investigate pressure losses at segment bend and bends
- investigate pressure loss at contraction and enlargement
- pressure loss at a ball valve and determination of a simple valve characteristic

### Description

- **pressure losses in various pipe fittings and in the ball valve**
- **precise pressure measurement via annular chambers**
- **visualisation of differential pressures on manometer panel**

When water flows through a pipe system, the flow resistances causes pressure losses to occur at pipe fittings and valves and fittings.

The HM 150.29 unit can be used to investigate and visualise the pressure losses in pipe elements. The experimental unit can be used to assess how different pipe geometries affect the flow.

The HM 150.29 experimental unit comprises a pipe section containing several pipe elements with different flow resistances, as well as a contraction and enlargement piece. There is also a ball valve integrated in the pipe. There are pressure measuring points with annular chambers upstream and downstream of the pipe elements, which ensure accurate pressure measurement.

The pressure measuring points can be connected in pairs to a 6 tube manometers in order to determine the pressure loss of a pipe element.

The experimental unit is positioned easily and securely on the work surface of the HM 150 base module. The water is supplied and the flow rate measured by HM 150. Alternatively, the experimental unit can be operated by the laboratory supply.



HM 150.29
Energy losses in piping elements

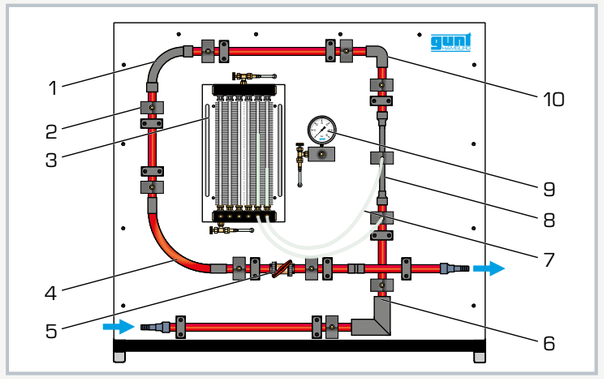


1 narrow pipe bend, 2 annular chamber, 3 6 tube manometers, 4 wide pipe bend, 5 ball valve, 6 segment bend, 7 connecting hose, 8 contraction/enlargement, 9 Bourdon tube pressure gauge, 10 pipe angle

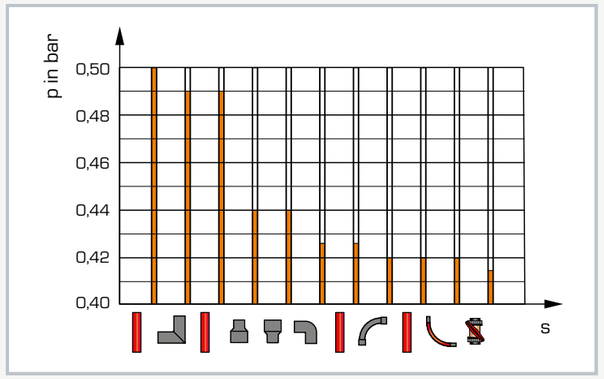


Sample measurement of the pressures between the various pipe elements at a flow rate of 10,3L/min; p pressure, s continuous pipe section from inlet to outlet

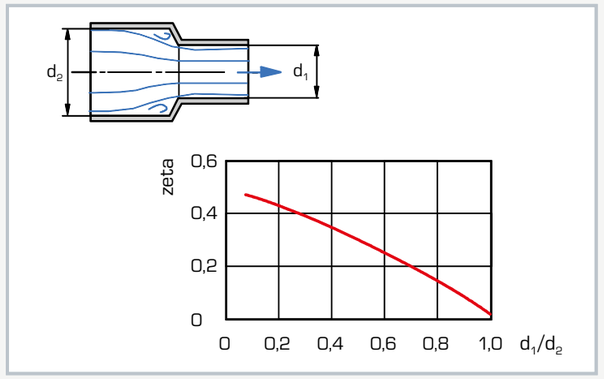


Representation of the flow conditions in a sudden contraction and associated resistance coefficient zeta; d inner diameter

### Specification

[1] investigation of the pressure loss in flow through pipe fittings and in the ball valve
[2] sudden contraction and sudden enlargement, pipe bend, segment bend, pipe angle and ball valve as measurement objects
[3] annular chambers allow precise measurement of pressure
[4] 6 tube manometers for displaying the pressures
[5] Bourdon tube pressure gauge for pressure measurement
[6] flow rate determined by base module HM 150
[7] water supply via HM 150 or via laboratory supply

### Technical data

Pipe, PVC
- inner diameter: 17mm

Pipe elements, PVC
Inner diameter: d
- sudden contraction: from d=17 to d=9,2mm
- sudden enlargement: from d=9,2 to d=17mm
- segment bend: d=17mm, 90°
- pipe angle: d=17mm, 90°
- narrow pipe bend: d=17mm, r=40mm, 90°
- wide pipe bend: d=17mm, r=100mm, 90°

Measuring ranges
- pressure:
  - 1x 0...1,6bar
  - 6x 0...0,03bar

LxWxH: 840x675x930mm
Weight: approx. 28kg

### Required for operation

HM 150 (closed water circuit) or water connection, drain

### Scope of delivery

1 experimental unit
1 set of hoses
1 set of instructional material

# HM 150.11
## Losses in a pipe system

### Description

- **pressure losses in the piping system**
- **pressure measurement without interaction via annular chambers**
- **transparent measuring objects for determining flow rate**

Pressure losses occur during the flow of real fluids due to friction and turbulence (vortices). Pressure losses in pipes, piping elements, fittings and measuring instruments (e.g. flow meter, velocity meter) cause pressure losses and must therefore be taken into account when designing piping systems.

HM 150.11 allows to study the pressure losses in pipes, piping elements and shut-off devices. In addition, the differential pressure method is presented for measuring the flow rate.

The experimental unit contains six different pipe sections capable of being shut off individually. The pipe sections are equipped with piping elements such as bends, elbows and branches. In one pipe section, different shut-off devices and measuring objects are installed to determine the flow rate. The measuring objects are made of transparent material and provide excellent insight into the inner structure. The pressure measuring points in the piping system are designed as annular chambers. This creates a largely interference-free pressure measurement.

The experiments measure the pressure losses in pipes and piping elements, such as branches and bends. The opening characteristic of the shut-off devices are also recorded. The pressures are measured with tube manometers.

The experimental unit is positioned easily and securely on the work surface of the HM 150 base module. The water is supplied and the flow rate measured by HM 150. Alternatively, the experimental unit can be operated by the laboratory supply.

### Learning objectives/experiments

- pressure losses in pipes, piping elements and fittings
- how the flow velocity affects the pressure loss
- determining resistance coefficients
- opening characteristics of angle seat valve and gate valve
- familiarisation with various measuring objects for determining flow rate:
  - Venturi nozzle
  - orifice plate flow meter and measuring nozzle



HM 150.11
Losses in a pipe system

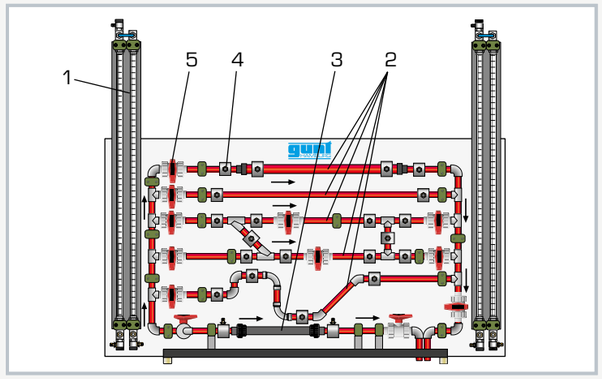


1 tube manometers, 2 various pipe sections, 3 pipe section for interchangeable shut-off/measuring objects, 4 annular chamber, 5 ball valve

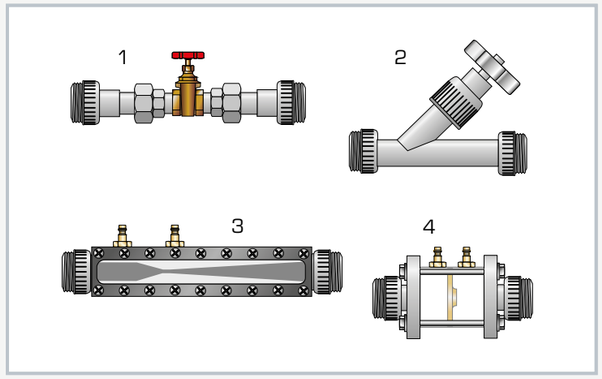


Shut-off devices and measuring objects for determining flow rate: 1 gate valve, 2 angle seat valve, 3 Venturi nozzle, 4 orifice plate flow meter or measuring nozzle

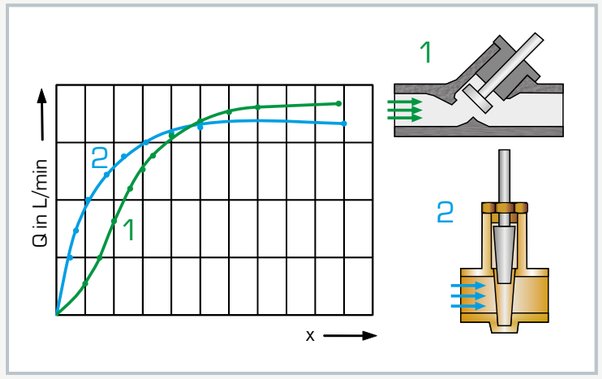


Opening characteristics of shut-off devices; Q flow rate, x opening, blue: angle seat valve, green: gate valve; 1 angle seat valve, 2 gate valve

### Specification

[1] investigation of pressure losses in piping elements and shut-off devices
[2] different measuring objects for determining flow rate according to the differential pressure method
[3] six pipe sections capable of being individually shut off, with different piping elements: sudden contraction, sudden enlargement, Y-pieces, T-pieces, corners and bends
[4] one pipe section to hold interchangeable shut-off/measuring objects
[5] measuring objects made of transparent material: Venturi nozzle, orifice plate flow meter and measuring nozzle
[6] shut-off devices: angle seat valve, gate valve
[7] annular chambers allow measurement of pressure without interaction
[8] 2 twin tube manometers for measuring the pressure difference
[9] flow rate determined by HM 150 base module
[10] water supply using HM 150 base module or via laboratory supply

### Technical data

Pipe section to hold fittings or measuring objects
- 20x1,5mm, PVC

Pipe sections
Inside diameter: d
- straight: d=20x1,5mm, length: 800mm, PVC
- sudden contraction: d=32x1,8-20x1,5mm, PVC
- sudden enlargement: d=20x1,5-32x1,8mm, PVC
- with 2x Y-piece 45° and 2x T-piece
- with 2x 90° elbow/bend: d=20x1,5mm, PVC and 2x 45° elbow: d=20x1,5mm, PVC

2x twin tube manometers: 0...1000mmWC

Measuring ranges
- pressure: 0...0,1bar

LxWxH: 1550x640x1300mm
Weight: approx. 58kg

### Required for operation

HM 150 (closed water circuit) or water connection, drain

### Scope of delivery

1 experimental unit
2 shut-off devices (angle seat valve, gate valve)
1 Venturi nozzle
1 orifice plate flow meter or measuring nozzle
1 set of hoses
1 set of tools
1 set of instructional material

# HM 150.13
## Methods of flow measurement

### Description

- **different methods of flow rate measurement**
- **visualisation of the pressure distribution in Venturi nozzle or measuring orifice/measuring nozzle**

Measuring the flow rate is an important aspect in measurement technology. There are several ways to measure the flow of fluids in pipes.

With HM 150.13 students can familiarise themselves with various methods for measuring flow in the pipe system and apply them in practice.

The experimental unit contains different measuring instruments to determine the flow rate. These instruments are designed with transparent cases in order to visualise how they operate and function. The methods include, for example, rotameters, a Venturi nozzle or orifice plate flow meter and measuring nozzle.

Six tube manometers is used in order to determine the pressure distribution in the Venturi nozzle or the orifice plate flow meter and measuring nozzle. The total pressure is measured by a Pitot tube. The experimental unit is positioned easily and securely on the work surface of the HM 150 base module. The water is supplied and the flow rate measured by HM 150. Alternatively, the experimental unit can be operated by the laboratory supply.

### Learning objectives/experiments

- flow measurement with
  - orifice plate flow meter and measuring nozzle
  - Venturi nozzle
  - rotameter
- pressure measurement with Pitot tube
- comparison of different instruments for flow measurement
- determining the corresponding flow coefficients
- calibrating measuring instruments



# HM 150.13
## Methods of flow measurement

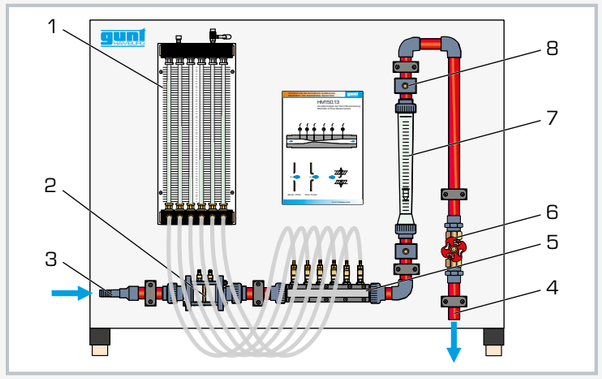


1 6 tube manometers, 2 orifice plate flow meter and measuring nozzle, 3 water supply, 4 water drain, 5 Venturi nozzle, 6 valve for adjusting the flow rate, 7 rotameter, 8 measuring point

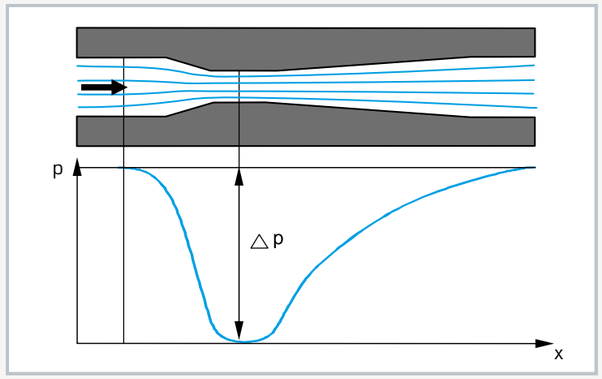


Pressure curve in a Venturi nozzle: p pressure, x section

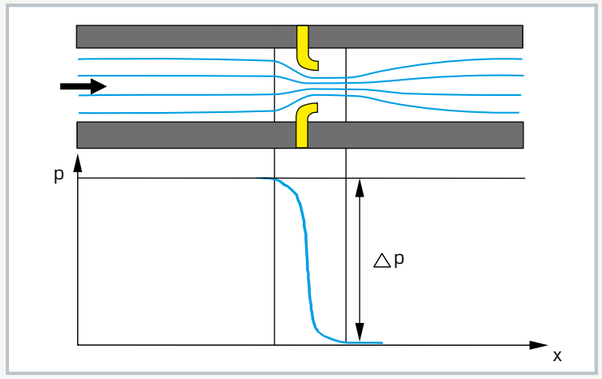


Pressure curve in an orifice plate flow meter: p pressure, x section

### Specification

[1] different methods of flow rate measurement
[2] measuring instruments: orifice plate flow meter/measuring nozzle, Venturi nozzle and rotameter
[3] 6 tube manometers to determine the pressure distribution in Venturi nozzle, orifice plate flow meter and measuring nozzle
[4] measurement of the total pressure with Pitot tube
[5] flow rate determined by HM 150 base module
[6] water supply via HM 150 or via laboratory supply

### Technical data

Venturi nozzle: A=84...338mm$^2$
- angle at the inlet: 10,5°
- angle at the outlet: 4°

Orifice plate flow meter: diameter=14mm
Measuring nozzle: diameter=18,5mm
Rotameter: max. 1700L/h

6 tube manometers: 390mmWC

LxWxH: 1100x672x900mm
Weight: approx. 30kg

### Required for operation

HM 150 (closed water circuit) or water connection, drain

### Scope of delivery

1 experimental unit
1 set of measuring instruments
1 set of hoses
1 set of tools
1 set of instructional material

# HM 241 Fundamentals of water flow

HM 241 is suitable for conducting basic experiments in the field of incompressible flow. This tabletop demonstrator only requires a small amount of space, is simple to use and offers particularly illustrative experiments thanks to the transparent design. The measured values are displayed on a PC. The experimental unit does not require a water connection.

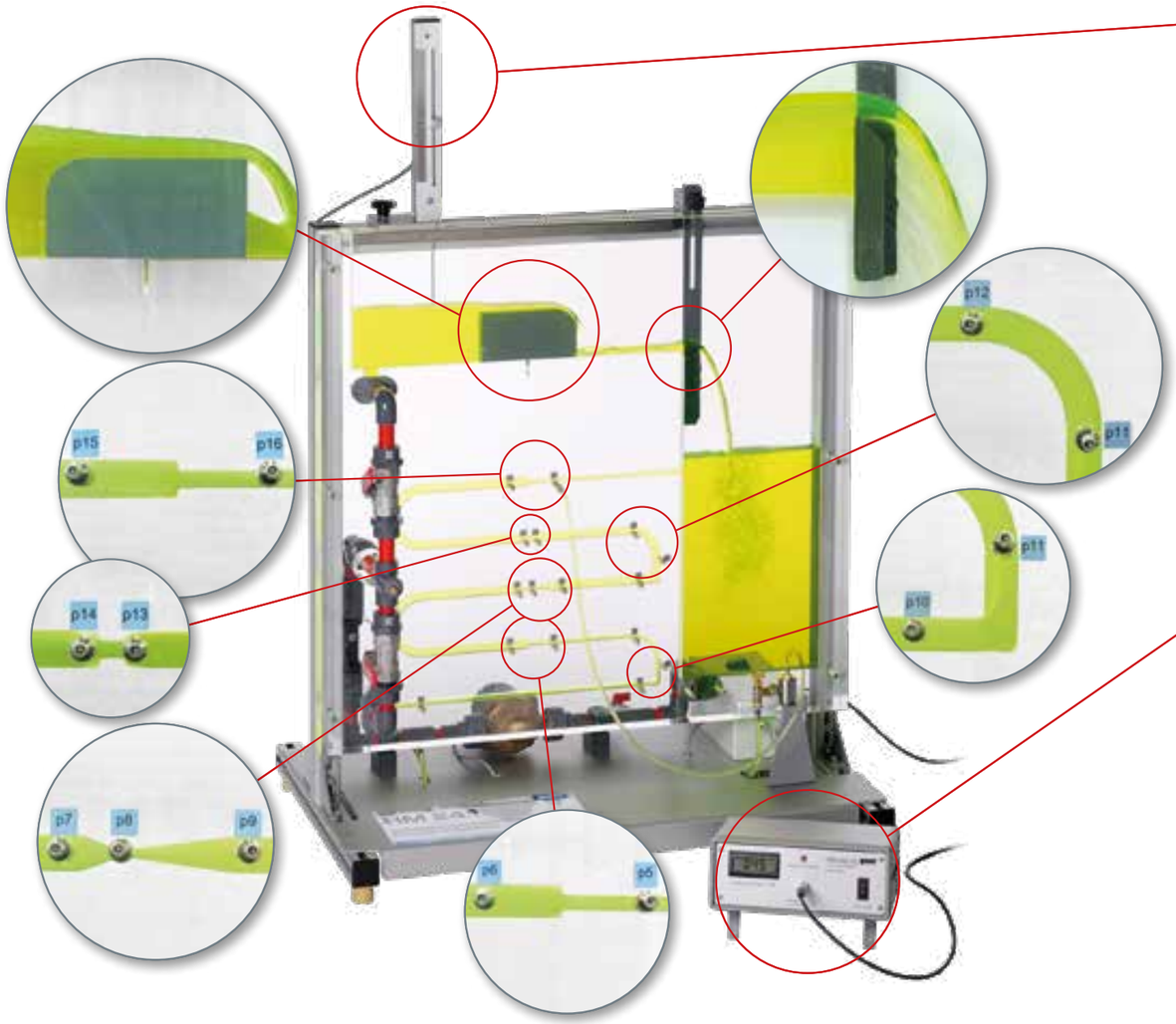

The water level in the open channel is measured with the electronic level gauge. The level gauge can be attached at any point on the side wall of the duct. The water level is determined by means of a sliding probe. The position of the probe can either be read directly from the scale on the level gauge or displayed digitally on the main unit.

The power meter HM 240.02 measures the power consumption of the pump and allows the calculation of the pump characteristic. The power is determined by real-time-multiplication of current and voltage. The power determination does not depend on the waveform of the plot.

## Software for data acquisition

The GUNT software included in the scope of delivery displays the measurement results and assists in the evaluation of the experiments.

The instructional material includes a detailed introduction to the fundamental principles of fluid mechanics.

The series includes extensive experiments on the subject of pipe flow and open-channel flow.

All major pipe elements such as:

- straight pipe sections, pipes with different cross-sections
- pipe bends, pipe angles
- enlargements, contractions
- nozzles, orifices

are clearly displayed in a compact space.

Open-channel flow and its main effects such as:

- overfall over the weir
- supercritical flow

can be seen especially well in the transparent open channel.

# HM 241
## Fundamentals of water flow

### Learning objectives/experiments

- fundamentals of pipe flow and open-channel flow
- differential pressure measurement at the orifice, Venturi nozzle, pipe bends and pipe angles, contraction and enlargement
- investigation of weir structures in an open channel in conjunction with the power meter HM 240.02
- recording a pump characteristic

### Description

- **water flow in open channels**
- **experiments on pipe flow**
- **closed water circuit**

In the field of fluid mechanics of incompressible fluids a distinction can be made between pipe flow and open-channel flow. With sufficient pressure and flow velocity in the completely filled pipe, the flow is considered as one-dimensional for reasons of simplicity. Due to this precondition physical phenomena can easily be described and calculated. Open-channel flow in contrast is always multi-dimensional.

The compact HM 241 experimental unit enables a variety of experiments on the fundamentals of incompressible flow in open channels and pipes.

A pump supplies water from the storage tank through the supply line into the open channel or the pipe. The flow processes are clearly visible since all parts are made of transparent plastic.

In the pipe section the water flows through an orifice, a Venturi nozzle, a contraction, an enlargement as well as pipe bends and pipe angles of varying diameters. The open channel has a broad-crested weir and a sharp-crested weir. A valve is used to close off or open up the two different working sections.

A pressure sensor is located on the device for differential pressure measurement. This sensor can be connected to the measuring points in the pipe via a hose. The supply line contains a flow rate sensor to determine the flow rate.

The measured values are transmitted directly to a PC via USB. The GUNT software is included and clearly displays the results of the experiments.

The water level is determined with an electronic water level gauge.

The power meter HM 240.02 is required to measure the power consumption of the pump.



HM 241
Fundamentals of water flow

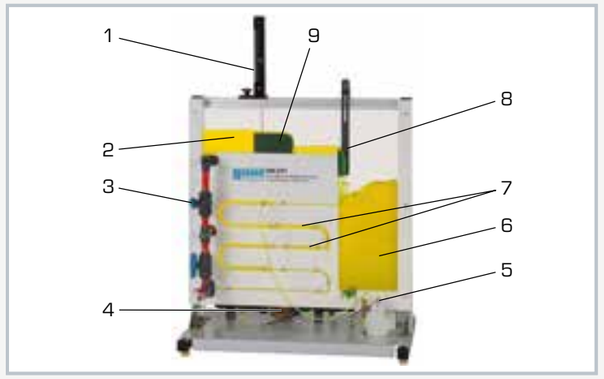


1 level gauge, 2 open channel, 3 shut-off valve, 4 pump, 5 pressure sensor, 6 storage tank, 7 pipe section with pressure measuring points, 8 sharp-crested weir, 9 broad-crested weir

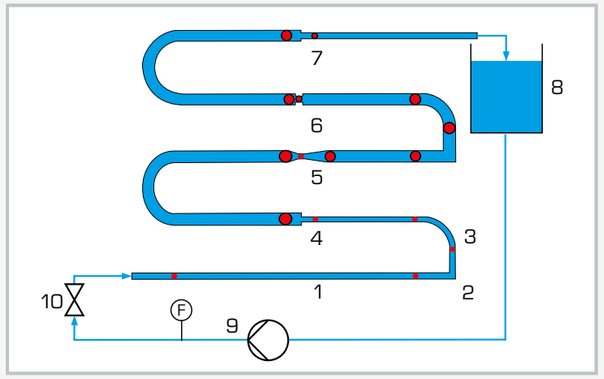


Pressure losses in pipes: 1 straight pipe section, 2 90° pipe angle, 3 90° pipe bend, 4 sudden enlargement, 5 Venturi nozzle, 6 orifice plate, 7 sudden contraction, 8 storage tank, 9 pump, 10 shut-off valve; F flow, red: pressure measuring points

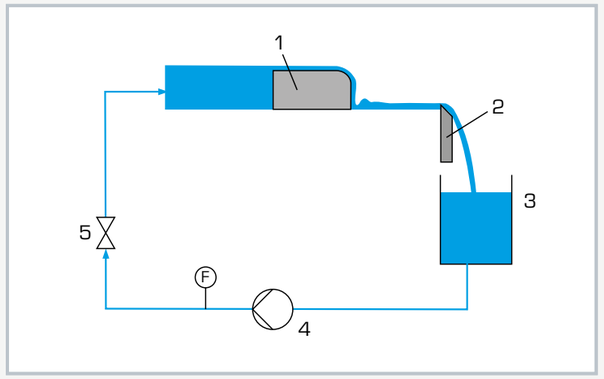


Open-channel flow: 1 broad-crested weir, 2 sharp-crested weir, 3 storage tank, 4 pump, 5 shut-off valve; F flow

### Specification

[1] investigation of the fundamentals of different areas of incompressible flow
[2] closed water circuit with pump
[3] transparent pipe section and open channel
[4] experiments on pressure losses at pipe bends and pipe angles, Venturi nozzle, orifice plate
[5] one broad-crested weir and one sharp-crested weir
[6] horizontally travelling level gauge with vertically travelling probe tip to measure the water levels
[7] pressure measuring points for differential pressure measurement before and after the respective pipe resistances
[8] measurement of the power consumption of the pump with power meter HM 240.02
[9] GUNT software for data acquisition via USB under Windows 7, 8.1, 10

### Technical data

Pump, 3 stages
- max. power consumption: 100W
- max. flow rate: 83L/min
- max. head: 6m

Electronic water level gauge
- measuring range: 0...200mm
- graduation: 1mm
- travel: max. 205mm

Measuring ranges
- differential pressure: 0...600mbar
- flow rate: 3,5...50L/min

230V, 50Hz, 1 phase
230V, 60Hz, 1 phase
120V, 60Hz, 1 phase
UL/CSA optional
LxWxH: 850x540x970mm
Weight: approx. ca. 50kg

### Required for operation

PC with Windows

### Scope of delivery

1 experimental unit
2 weirs
1 set of tools
1 electronic water level gauge
1 CD with GUNT software + USB cable
1 set of instructional material

# HM 150.19
## Operating principle of a Pelton turbine

### Learning objectives/experiments

- design and function of a Pelton turbine
- determination of torque, power and efficiency
- graphical representation of characteristic curves for torque, power and efficiency

### Description

- **model of an impulse turbine**
- **transparent operating area**
- **adjustable nozzle cross-section**
- **loading by band brake**

Water turbines are turbomachines utilising water power. The Pelton turbine is a type of impulse turbine; such turbines convert the pressure energy of water into kinetic energy entirely in the distributor. During the conversion, the water jet is accelerated in a nozzle and directed onto the blades of the Pelton wheel tangentially. The water jet is redirected by approximately 180° in the blades. The impulse of the water jet is transmitted to the Pelton wheel.

HM 150.19 is a model of a Pelton turbine demonstrating the function of an impulse turbine.

The experimental unit consists of the Pelton wheel, a needle nozzle used as distributor, a band brake for loading the turbine and a housing with a transparent front panel. The transparent cover enables to observe the water flow, the Pelton wheel and the nozzle during operation. The nozzle cross-section and thus the flow rate are modified by adjusting the nozzle needle.

The turbine torque is determined by force measurement on a band brake and is read on spring balances. For measuring the rotational speed, a non-contact speed sensor, e.g. HM 082, is required. A manometer shows the water pressure at the turbine inlet.

The experimental unit is positioned easily and securely on the work surface of the HM 150 base module. The water is supplied and the flow rate measured by HM 150. Alternatively, the experimental unit can be operated by the laboratory supply.



HM 150.19
Operating principle of a Pelton turbine

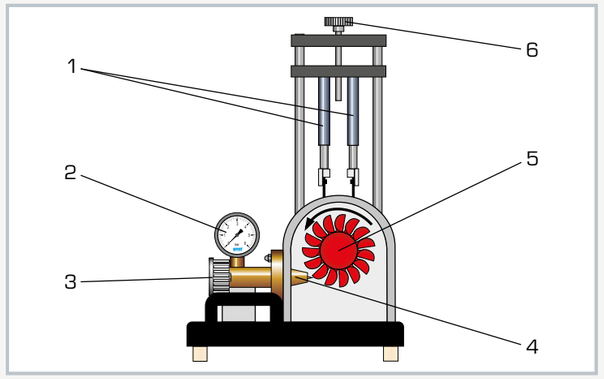


1 spring balance, 2 manometer, 3 adjustment of the nozzle cross-section, 4 needle nozzle, 5 Pelton wheel, 6 adjustment of the band brake

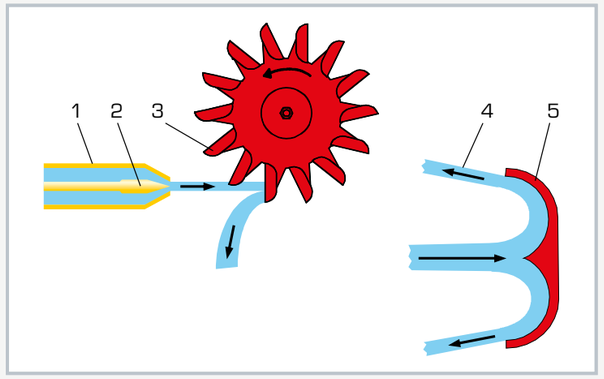


Operating principle of the Pelton turbine:
1 needle nozzle, 2 adjustable nozzle needle, 3 blade on the Pelton wheel, 4 redirected water jet, 5 profile of the blade

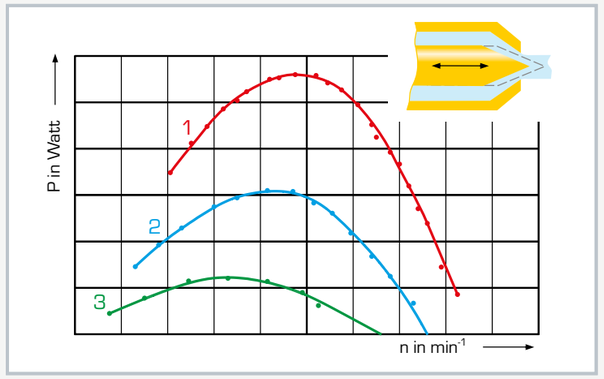


Turbine output curves at different positions of the nozzle needle:
1: Q=31,6L/min, 2: Q=18,8L/min, 3: Q=11,5L/min;
n speed, P turbine output

### Specification

[1] function of a Pelton turbine
[2] transparent front panel for observing the operating area
[3] loading the turbine by use of the band brake
[4] adjustable nozzle needle for setting different nozzle cross-sections
[5] marking on brake drum for non-contact speed measurement
[6] instruments: spring balances for determining the torque, manometer shows pressure at turbine inlet
[7] flow rate determination by base module HM 150
[8] water supply using base module HM 150 or via laboratory supply

### Technical data

Pelton turbine
- output: 5W at 500min$^{-1}$, approx. 30L/min, H=2m
- Pelton wheel
  - 14 blades
  - blade width: 33,5mm
  - external Ø: 132mm

Needle nozzle
- jet diameter: 10mm

Measuring ranges
- force: 2x 0...10N
- pressure: 0...1bar

LxWxH: 400x400x620mm
Weight: approx. 15kg

### Required for operation

HM 150 (closed water circuit) or water connection, drain

### Scope of delivery

1 experimental unit
1 set of instructional material

# HM 150.20
## Operating principle of a Francis turbine

### Learning objectives/experiments

- design and function of a Francis turbine
- determination of torque, power and efficiency
- graphical representation of characteristic curves for torque, power and efficiency

### Description

- **model of a reaction turbine**
- **transparent operating area**
- **turbine with adjustable guide vanes**
- **loading by band brake**

Water turbines are turbomachines utilising water power. The Francis turbine is a type of reaction turbine which converts the pressure energy of the water into kinetic energy in the distributor and in the rotor. The water is fed in the distributor by means of a spiral housing. The flowing water is accelerated in the distributor by the adjustable guide vanes and directed onto the blades. The redirection and further acceleration of the water in the rotor generates an impulse which is transmitted to the rotor.

HM 150.20 is the model of a Francis turbine demonstrating the function of a reaction turbine.

The experimental unit consists of the rotor, the distributor with adjustable guide vanes, a band brake for loading the turbine and a housing with a transparent front panel. The transparent cover enables to observe the water flow, the rotor and the guide vanes during operation. The angle of attack and thus the power of the rotor are modified by adjusting the guide vanes.

The turbine torque is determined by force measurement on a band brake and is read on spring balances. For measuring the rotational speed, a non-contact speed sensor, e.g. HM 082, is required. A manometer shows the water pressure at the turbine inlet.

The experimental unit is positioned easily and securely on the work surface of the HM 150 base module. The water is supplied and the flow rate measured by HM 150. Alternatively, the experimental unit can be operated by the laboratory supply.



HM 150.20
Operating principle of a Francis turbine

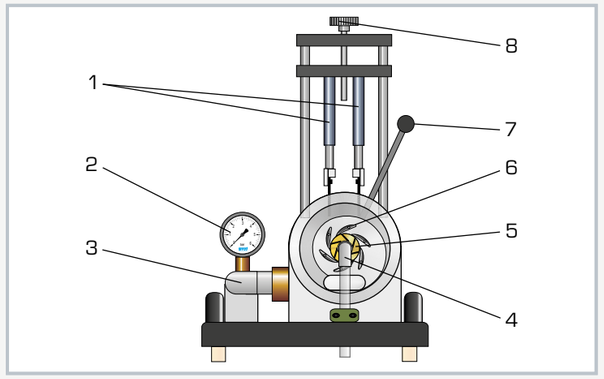


1 spring balance, 2 manometer, 3 water inlet, 4 water outlet, 5 rotor, 6 guide vanes, 7 adjustment of the guide vanes, 8 adjustment of the band brake

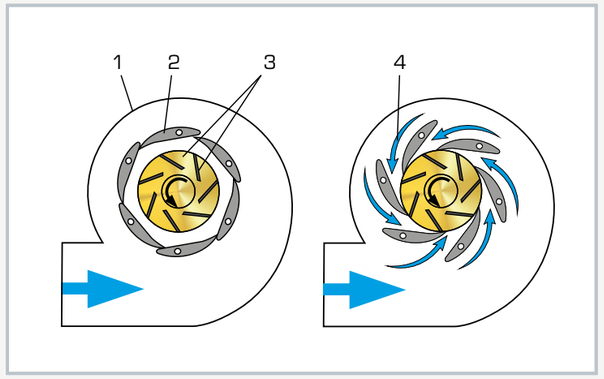


Operating principle of the Francis turbine: 1 spiral housing, 2 guide vane, 3 rotor with blades, 4 flow; on the left: guide vane position closed, Q=0, P=0; on the right: guide vane position open, Q=max., P=max.

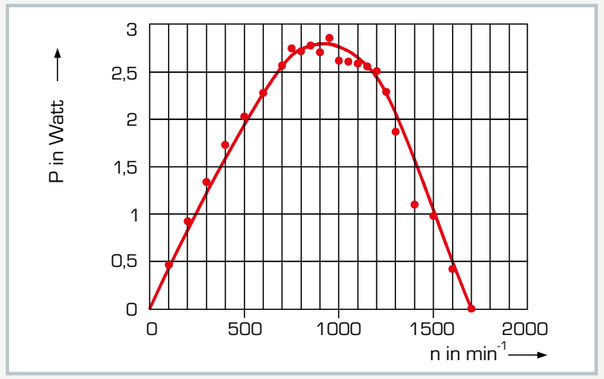


Characteristic curve for power output on the turbine shaft; P turbine power output, n speed

### Specification

[1] function of a Francis turbine
[2] transparent front panel for observing the operating area
[3] loading the turbine by use of the band brake
[4] adjustable guide vanes for setting different angles of attack
[5] marking on brake drum for non-contact speed measurement
[6] instruments: spring balances for determining the torque, manometer shows pressure at turbine inlet
[7] flow determination by base module HM 150
[8] water supply using the base module HM 150 or via lab supply

### Technical data

Turbine
- output: 12W at n=1100min$^{-1}$, approx. 40L/min, H=8m
- rotor
  - 7 blades
  - blade width: 5mm
  - external Ø: 50mm
- guide vanes
  - 6 vanes, adjustable (20 stages)

Measuring ranges
- force: 2x 0...10N
- pressure: 0...1,0bar

LxWxH: 400x400x630mm
Weight: approx. 17kg

### Required for operation

HM 150 (closed water circuit) or water connection, drain

### Scope of delivery

1 experimental unit
1 set of instructional material

# HM 150.04
## Centrifugal pump

The illustration shows HM 150.04 together with HM 150.

### Description

- **characteristic curve of a centrifugal pump**
- **variable speed via frequency converter**

Centrifugal pumps are turbomachines that are used for conveying fluids. The HM 150.04 unit can be used to study a centrifugal pump and to record a typical pump characteristic curve.

The experimental unit includes a self-priming centrifugal pump, a ball valve on the outlet side and manometers on the inlet and outlet side. It is driven by an asynchronous motor. The speed is infinitely adjustable by using a frequency converter. A ball valve is used to adjust the head.

In experiments, the operating behaviour of the pump as a function of the flow rate is studied and displayed in characteristic curves. The motor's speed and electrical power are displayed digitally. Pressures on the inlet and outlet side are displayed on two manometers.

The experimental unit is positioned easily and securely on the work surface of the HM 150 base module. The pump draws in water from the tank on the base module HM 150. The flow rate is determined volumetrically by flowing back into the measuring tank on HM 150.

### Learning objectives/experiments

- recording the pump characteristic curve at a constant pump speed
  - measuring the inlet and outlet pressure
  - determining the flow rate
- recording the pump characteristics for different speeds
- power and efficiency curves
  - measuring the electrical drive power
  - determining the hydraulic power
  - calculating the efficiency



# HM 150.04
## Centrifugal pump

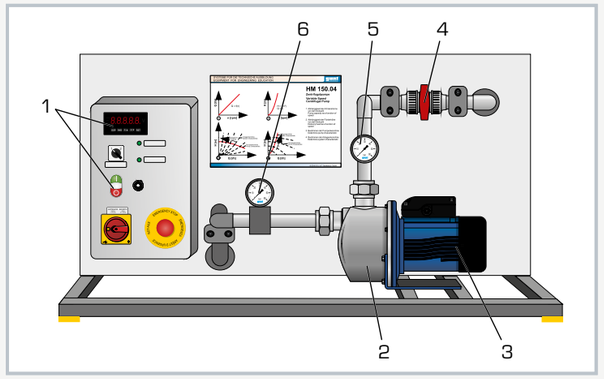


1 display and controls, 2 centrifugal pump, 3 motor, 4 ball valve for adjusting the head, 5 outlet side manometer, 6 inlet side manometer

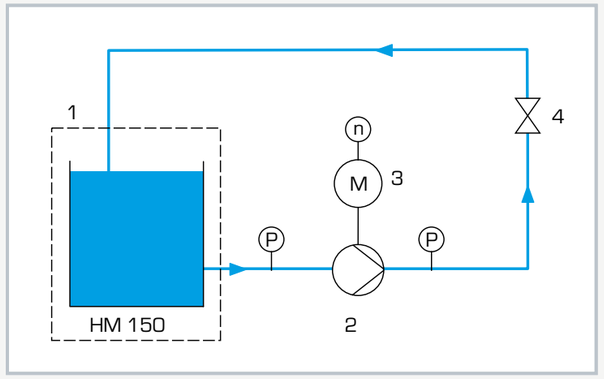


1 water supply via HM 150, 2 centrifugal pump, 3 motor, 4 ball valve for adjusting the head; P pressure, n speed

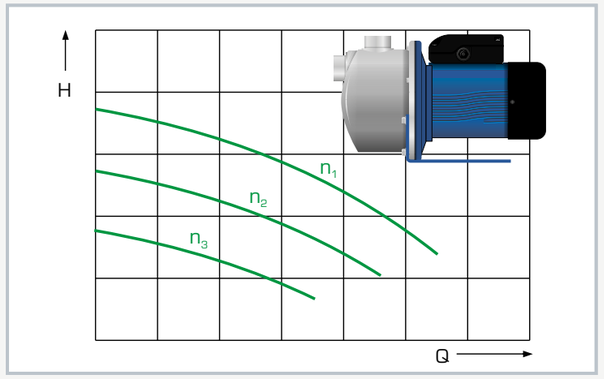


Pump characteristic curves at different speeds:
H head, Q flow rate, n speed

### Specification

[1] investigation of a centrifugal pump
[2] drive with variable speed via frequency converter
[3] ball valve to adjust the head
[4] manometers on the inlet and outlet side of the pump
[5] digital display of speed and power
[6] flow rate determined by base module HM 150
[7] water supply using base module HM 150

### Technical data

Centrifugal pump, self-priming
- max. flow rate: 3000L/h
- max. head: 36,9m

Asynchronous motor
- nominal power: 370W

Measuring ranges
- pressure (outlet side): -1...5bar
- pressure (inlet side): -1...1,5bar
- speed: 0...3000min$^{-1}$
- power: 0...1000W

Measuring ranges
- pressure (outlet): -1...5bar
- pressure (inlet): -1...1,5bar
- speed: 0...3000min$^{-1}$
- power: 0...1000W

230V, 50Hz, 1 phase
230V, 60Hz, 1 phase; 120V, 60Hz, 1 phase
UL/CSA optional
LxWxH: 1100x640x600mm
Weight: approx. 46kg

### Required for operation

HM 150 (closed water circuit)

### Scope of delivery

1 experimental unit
1 set of instructional material

# HM 150.16
## Series and parallel configuration of pumps

### Description

- **series and parallel configuration of pumps**
- **determining pump characteristic curves**

In complex systems, pumps can be connected in series or in parallel. In series operation the heads are added together and in parallel operation, the flow rates of the pumps are added. Series and parallel configuration of pumps behave similar to series and parallel configuration of electric resistances in electric circuits. The pump correlates with the electric resistance, the flow correlates with the electric current and the head with the voltage.

With HM 150.16 pumps are studied individually, in series and in parallel configuration.

The experimental unit contains two identical centrifugal pumps and an intake tank with overflow. The overflow ensures a constant suction head in the tank, regardless of the water supply. Ball valves in the pipes allow easy switching between series and parallel operation.

Pressures at inlet and outlet of the two pumps are displayed on manometers.

The experimental unit is positioned easily and securely on the work surface of the HM 150 base module. The water is supplied and the flow rate measured by HM 150. Alternatively, the experimental unit can be operated by the laboratory supply.

### Learning objectives/experiments

- investigation of pumps in series and parallel configuration
  - determining the head
  - recording the pump characteristics
  - determining the hydraulic power
  - determining the operating point

# HM 150.16
## Series and parallel configuration of pumps

1 tank, 2 overflow, 3 water connection, 4 ball valve, 5 pump, 6 pump switch, 7 drain, 8 manometer

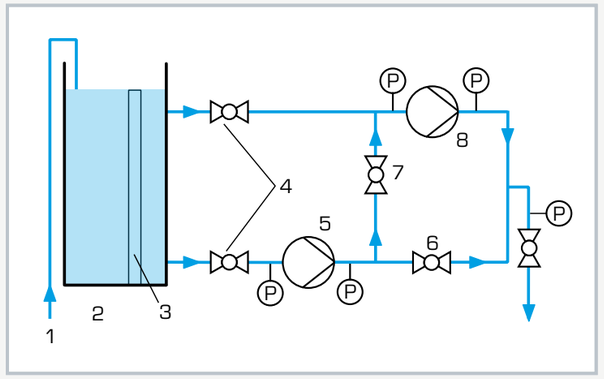


1 water connection, 2 tank, 3 overflow, 4 ball valve, 5 pump 1, 6 and 7 ball valves for switching the pumps between series and parallel operation, 8 pump 2; P pressure

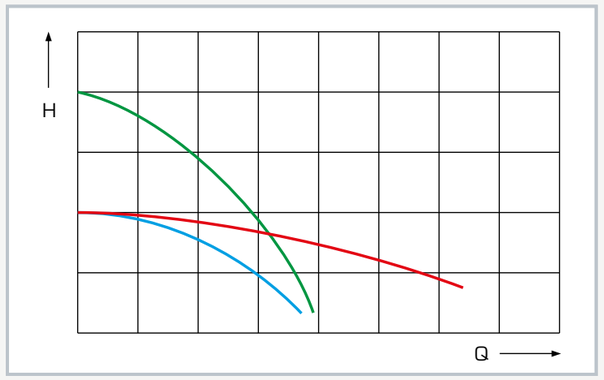


Characteristic curves: blue: one pump in operation, red: parallel configuration of pumps, green: series configuration of pumps; H head, Q flow rate

### Specification

[1] investigation of series and parallel configuration of pumps
[2] two identical centrifugal pumps
[3] transparent tank as intake tank
[4] overflow in the tank ensures constant suction head
[5] ball valves used to switch between series and parallel operation
[6] manometers at inlet and outlet of each pump
[7] flow rate determined by base module HM 150
[8] water supply via HM 150 or via laboratory supply

### Technical data

2x centrifugal pump
- power consumption: 370W
- max. flow rate: 21L/min
- max. head: 12m

Tank: 13L
Pipes and pipe connections: PVC

Measuring ranges
- pressure (inlet): 2x -1...1,5bar
- pressure (outlet): 3x 0...2,5bar

230V, 50Hz, 1 phase
230V, 60Hz, 1 phase; 120V, 60Hz, 1 phase
UL/CSA optional
LxWxH: 1110x650x500mm
Weight: approx. 62kg

### Required for operation

HM 150 (closed water circuit) or water connection, drain

### Scope of delivery

1 experimental unit
1 set of instructional material

# HM 150.10
## Visualisation of streamlines

### Description

- **visualisation of streamlines**
- **ink as a contrast medium**
- **various models included: drag bodies and changes in cross-section**
- **sources and sinks, individually or in combination**

The laminar, two-dimensional flow in HM 150.10 is a good approximation of the flow of ideal fluids: the potential flow.

HM 150.10 can be used to visualise streamline fields for flows around drag bodies and flow through changes in cross-section. The streamlines are displayed in colour by injecting a contrast medium (ink). Sources and sinks are generated via four water connections in the bottom plate. The streamlines can be clearly observed through the glass plate during flow around and flow through.

The water flow rate and the quantity of contrast medium injected can be adjusted by valves. The water connections are also activated by valves and can be combined as required. Individual models can be cut out of a rubber plate that is included.

The experimental unit is positioned easily and securely on the work surface of the HM 150 base module. The water is supplied by HM 150. Alternatively, the experimental unit can be operated by the laboratory supply.

### Learning objectives/experiments

- visualisation of streamlines in
  - flow around drag bodies
  - flow through changes in cross-section
- influence of sources and sinks



# HM 150.10
## Visualisation of streamlines

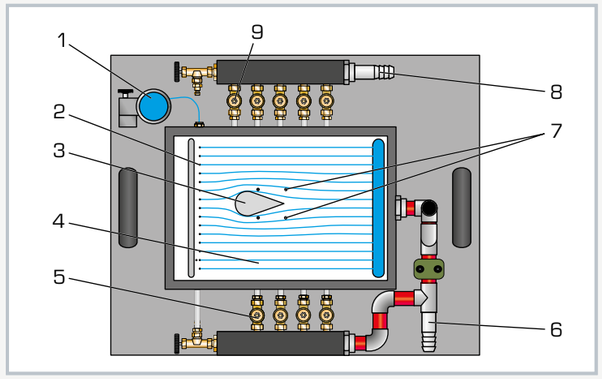


1 tank for contrast medium, 2 holes for injecting the contrast medium, 3 drag body, 4 experiment area, 5 valves for sinks, 6 water drain, 7 holes for sources and sinks, 8 water supply, 9 valves for sources

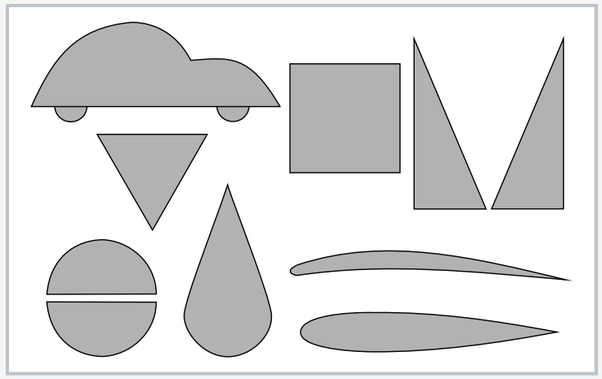

Included models
car, triangle, square, 2 triangles for change in cross-section, 2 semi-circles, droplet, streamlined body, guide vane profile

### Specification

[1] visualisation of streamlines
[2] water as flowing medium and ink as contrast medium
[3] upper glass plate, hinged for interchanging models
[4] bottom plate with water connections for generating sources/sinks
[5] sources/sinks can be combined as required
[6] different drag bodies and changes in cross-section included
[7] rubber plate for creating your own models included
[8] flow velocity, water supply and water drain in sources/sinks as well as dosage of the contrast medium can be adjusted by using valves
[9] water supply using HM 150 base module or via laboratory supply

### Technical data

Flow chamber contains two plates
- distance between the plates: 2mm
- upper plate made of glass
- bottom glass plate with four water connections for sources/sinks
- size experiment area: LxW: 400x280mm

10 drag bodies and changes in cross-section

Rubber plate for your own models
- LxH: 300x400mm
- thickness: 2mm

Injection of the contrast medium (ink)
- 15 holes

Tank for contrast medium: 500mL

LxWxH: 640x520x520mm
Weight: approx. 24kg

### Required for operation

HM 150 (closed water circuit) or water connection, drain

### Scope of delivery

1 experimental unit
1 set of models
1 rubber plate
1 ink (2x 30mL)
1 set of hoses
1 set of instructional material

# HM 135
## Determination of the settling velocity

### Learning objectives/experiments

- influence of the following parameters on the settling velocity of spheres:
  - diameter of the sphere
  - density of the sphere
  - density of the fluid
  - viscosity of the fluid

### Description

- **settling velocity of spheres of various diameters and densities**

The settling velocity of solids in fluids is an important factor in fluid mechanics and process engineering. For example, the settling velocity is the decisive factor when planning sedimentation tanks for water treatment.

HM 135 contains two transparent cylinders for comparative examinations. The two cylinders enable comparing the influence of the sphere diameter, sphere density and different fluids on the settling velocity. Guide tubes in the cover of the two cylinders enable safe insertion of the sphere. Two O-rings per cylinder mark the measuring section. At the lower end of the cylinder there is a sluice through which the spheres can be removed again without significant loss of fluid.

A stopwatch measures the sedimentation time. Two areometers with different measuring ranges enable the determination of the fluid densities.



# HM 135
## Determination of the settling velocity

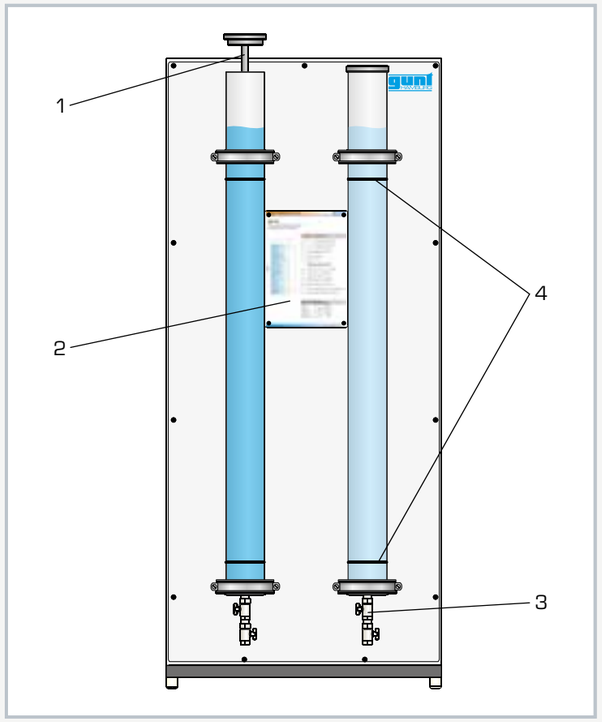


1 cover with guide tube, 2 info panel, 3 sluice, 4 marking of the measuring section

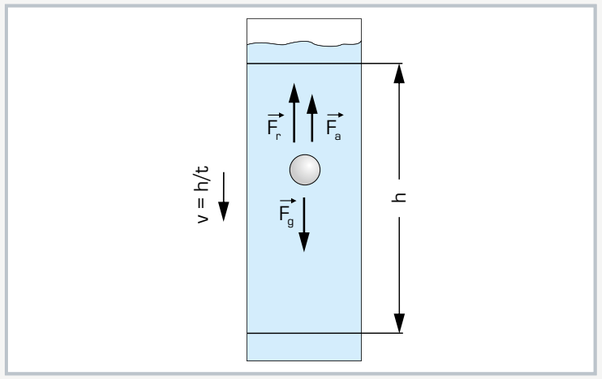


Determination of the settling velocity
v settling velocity, h sink height, t sedimentation time, $F_g$ weight, $F_a$ lift, $F_r$ drag

### Specification

[1] experimental unit to determine the settling velocity of different spheres
[2] 2 transparent cylinders
[3] marking of the measuring section
[4] cover with guide tube to insert the sphere
[5] sluice to remove the spheres from the cylinder
[6] 10 spheres of various densities and diameters
[7] 2 areometers to determine the density of the fluids
[8] stopwatch to measure the sedimentation time

### Technical data

2 cylinders
- inner Ø: 92mm each
- height: 1330mm each
- sink height: 1000mm each

Spheres
- aluminium (density: 2,7kg/dm$^3$)
  - 2x 5mm Ø
  - 2x 10mm Ø
- polyoxymethylene (POM), density: 1,41kg/dm$^3$
  - 2x 5mm Ø
  - 2x 10mm Ø
- polyamide (PA), density: 1,13kg/dm$^3$
  - 2x 10mm Ø

Measuring ranges
- density: 1x 0,8...1,0kg/dm$^3$, 1x 1,0...1,2kg/dm$^3$

LxWxH: 720x640x1650mm
Weight: approx. 45kg

### Scope of delivery

1 experimental unit
1 set of spheres
2 areometers
1 glass cylinder for areometer
1 stopwatch
1 set of instructional material

# Open-channel flow

In nature, watercourses represent "open-channel flow". For centuries, humans have been making structural interventions to watercourses: irrigation systems, "taming" of rivers using weirs, stilling basins and sills for the sake of flood control or for energy production.

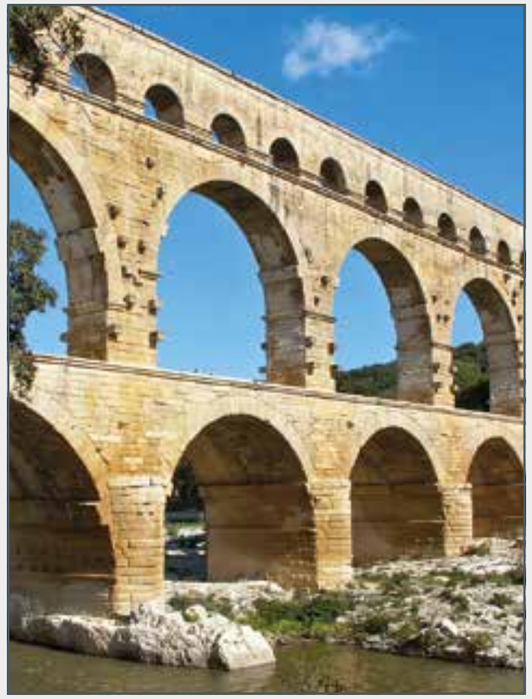

In the field of engineering education, open-channel flow is usually covered as part of fluid mechanics. This topic is especially relevant to agricultural and environmental sciences, civil engineering, geologists and geographers. Special study programmes for hydrology and water resources management are widespread and of current relevance. Having a sound understanding of the fundamentals of **open-channel flow** is essential.

Famous examples include ancient water systems: aqueducts (left) or agricultural irrigation channels extending over very large distances: the "Levadas" in Portugal (top).

## Learning objectives / experiments

**Classification of open-channel flows**

- spatial / temporal variation
- internal state of flow and velocity distribution

**Flow resistance and turbulent flow properties: flow formulas, discharge curves, energy dissipation**

- uniform discharge
- gradually varied discharge
- rapidly varied discharge

**Varied discharge**

- flow in rectangular channel (specific energy and specific discharge, Froude number)
- control structures (flow over structures: weirs, flow under structures: sluice gates, flow through structures)

**Energy dissipation**

- hydraulic jump
- stilling basin

**Transient discharge**

- waves
- flow-induced vibrations

**Metrological methods in open-channel flow**

- pressures, velocities, flow rates

**Sediment transport**

All GUNT experimental flumes cover the learning objectives presented here to a large extent. A broad cross-section of the required theory of open-channel hydraulics is supported by the range of possible experiments and taught by practical experiments.

Laboratory experiments on flumes provide students with versatile and flexible ways to learn about the subject area of open-channel hydraulics. This approach includes the following features and benefits:

- closed water circuit with variable flow and variable flow velocity
- more simple and more versatile use of measuring instruments
- adjustable angle of inclination for the entire flume
- transparent side walls
- investigation of a broad range of topics thanks to easy to exchange models

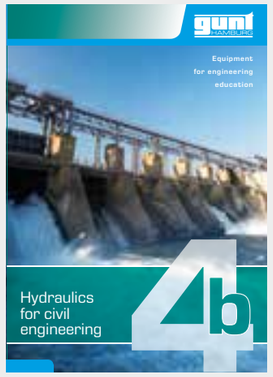


Open-channel flow is covered in detail in catalogue 4b, "Hydraulics for civil engineering".

# HM 150.03
## Plate weirs for HM 150

The illustration shows a Rehbock weir incorporated into the HM 150 base module.

### Description

- **flow over sharp-crested weirs**
- **typical measuring weirs: Thomson weir and Rehbock weir**

Sharp-crested weirs are a type of control structure that dam up an open channel in a defined manner. They are often used to determine the discharge of an open channel.

HM 150.03 contains two different plate weirs as sharp-crested weirs. The two weirs are typical measuring weirs with defined weir openings: in the Thomson weir the opening is triangular; in the Rehbock weir it is rectangular.

The weirs are installed and screwed in place into the HM 150 base module. The weir can be installed and replaced quickly and easily.

Water from the small experimental flume in HM 150 flows over the weir being investigated. A level gauge for detecting the head is included in the delivery. The head is used to determine the discharge, which is then compared to the measured values from HM 150.

### Learning objectives/experiments

- free overfall at the sharp-crested weir
- plate weirs as measuring weirs
  - determining the discharge coefficient
  - comparison of measuring weirs (Rehbock, Thomson)
- determining the discharge
- comparison of theoretical and measured discharge



# HM 150.03
## Plate weirs for HM 150

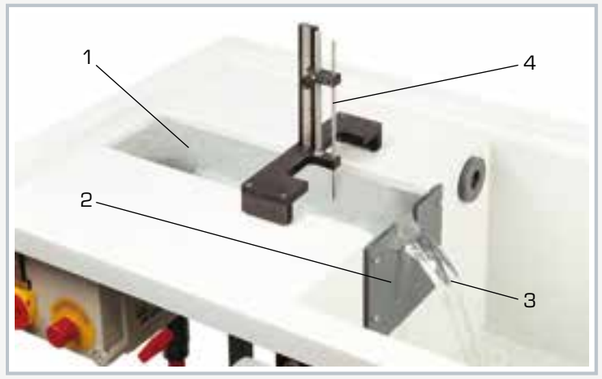


1 experimental flume from HM 150, 2 Rehbock weir, 3 nappe, 4 level gauge

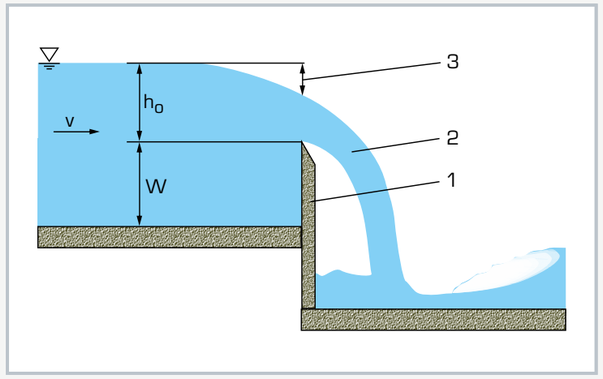


Free overfall at the plate weir: 1 plate weir, 2 nappe, 3 draw down; v flow velocity, $h_0$ head, W height of weir

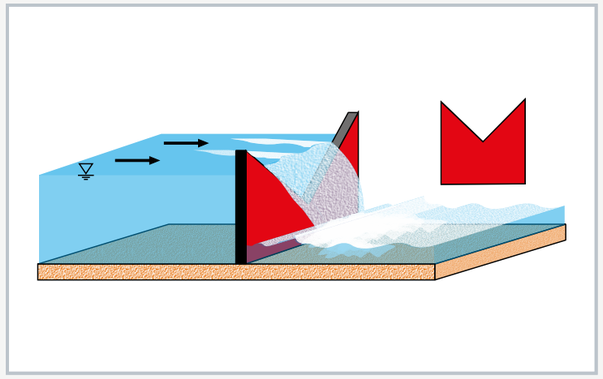

Flow over a triangular weir according to Thomson

### Specification

[1] discharge measurement in open channels using 2 measuring weirs
[2] measuring weirs for installation in the HM 150 experimental flume
[3] Thomson weir with V-profile
[4] Rehbock weir with rectangular profile
[5] level gauge with scale for determining the head
[6] level gauge can be positioned anywhere along the experimental flume

### Technical data

Weirs
- material: stainless steel
- self-sealing
- rectangular profile
  - LxW of the section: 60mm
- V-profile
  - angle of the section: 90°
  - height of the section: 50mm

Measuring ranges
- head: 0...200mm

LxWxH: 230x190x8mm (weir plates)
LxWxH: 290x190x290mm (level gauge)
Total weight: approx. 4kg

### Scope of delivery

2 weir plates
1 level gauge
1 set of instructional material

# HM 150.21
## Visualisation of streamlines in an open channel

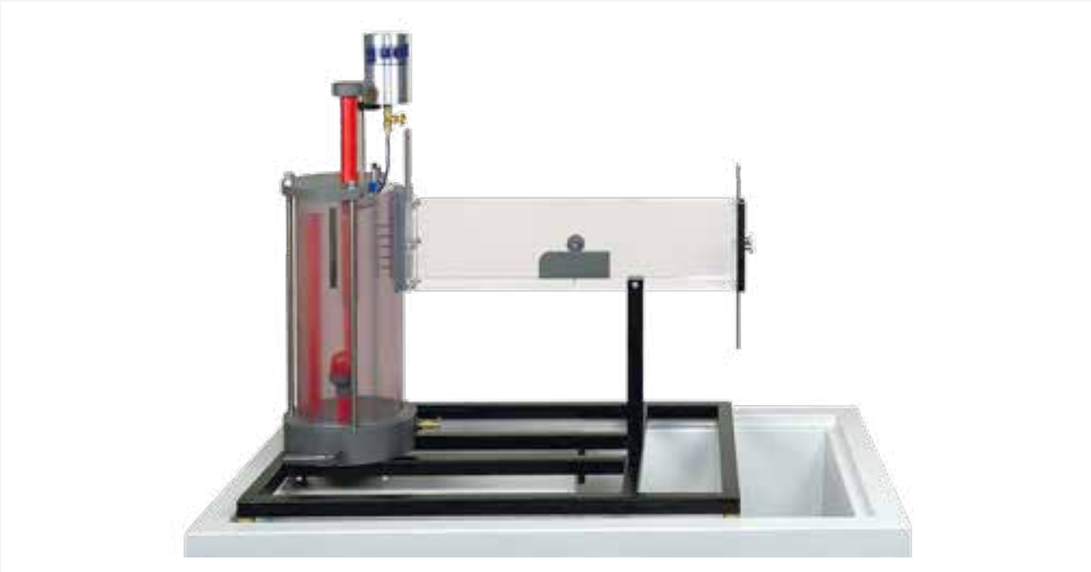

### Description

- **flow around various drag bodies**
- **incident flow of different weirs**
- **ink as contrast medium for visualising the streamlines**

HM 150.21 can be used to visualise flow around drag bodies and flow phenomena in open channels.

Either a drag body or weir is fixed in the experimental flume. The streamlines are made visible by injecting a contrast medium. The experimental flume is made of transparent material so that the streamlines and the formation of vortices can easily be observed. The water level in the experimental flume can be adjusted via a sluice gate at the inlet and via a weir at the outlet.

There are two weirs and four different drag bodies available for the experiments. A stabiliser ensures an even and non-vortical flow of water.

The experimental unit is positioned easily and securely on the work surface of the HM 150 base module. The water is supplied by HM 150. Alternatively, the experimental unit can be operated by the laboratory supply.

### Learning objectives/experiments

- how differently shaped weirs affect the flow
- visualisation of streamlines for flow incident to a weir
- visualisation of streamlines when flowing around various drag bodies



# HM 150.21
## Visualisation of streamlines in an open channel

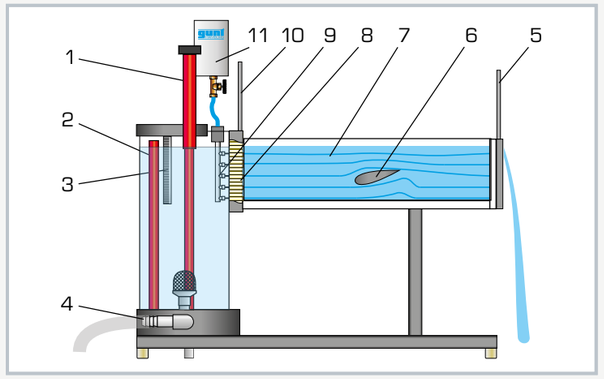


1 adjustable overflow, 2 tank, 3 scale, 4 water supply from HM 150, 5 weir at the water outlet, 6 drag body, 7 experimental flume, 8 flow straightener, 9 distributor for contrast medium, 10 sluice gate at the water inlet to the experimental flume, 11 tank for contrast medium

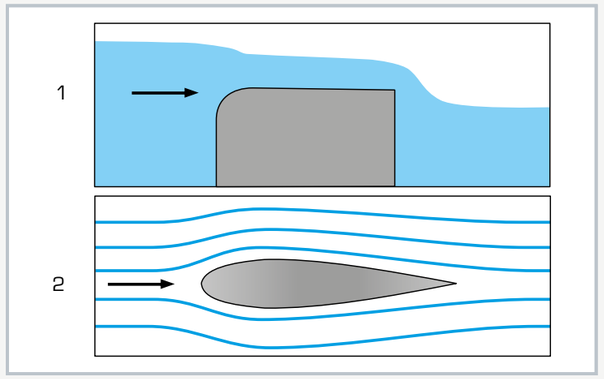


1 incident flow at the broad-crested weir, 2 flow around a streamlined body

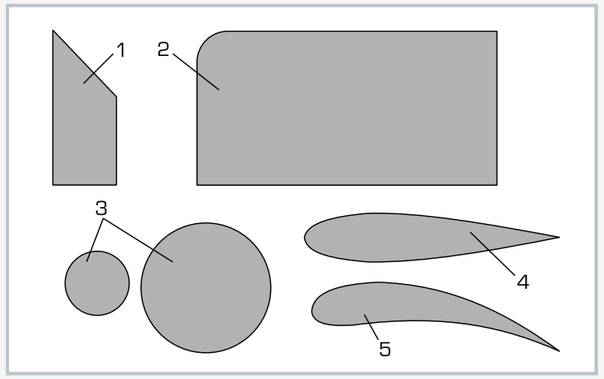


Drag bodies and weirs supplied
1 sharp-crested weir, 2 broad-crested weir, 3 cylinders, 4 streamlined body, 5 guide vane profile

### Specification

[1] visualisation of streamlines during incident flow and flow around various weirs and drag bodies
[2] transparent experimental flume
[3] incident flow demonstrated on two weirs
[4] demonstration of flow around four different drag bodies
[5] contrast medium: ink
[6] distributor for contrast medium with seven nozzles
[7] water level in the experimental flume adjustable via sluice gate at the water inlet and weir at the water outlet
[8] flow straightener for even, non-vortical water inlet
[9] water supply using HM 150 base module or via laboratory supply

### Technical data

Experimental flume
- LxWxH: 625x20x150mm

Contrast medium: ink
Injection of the contrast medium
- 7 nozzles

Tank for water: 12,5L
Tank for ink: 200mL

Drag bodies
- small cylinder, diameter: 35mm
- large cylinder, diameter: 60mm
- streamlined body
- guide vane profile

Weirs
- broad-crested weir
- sharp-crested weir

LxWxH: 895x640x890mm
Weight: approx. 24kg

### Required for operation

HM 150 (closed water circuit) or water connection, drain

### Scope of delivery

1 experimental flume
1 set of drag bodies and weirs
1 ink (1L)
1 set of tools
1 set of instructional material

# HM 164
## Open channel and closed channel flow

### Description

- **flow processes in the open channel: gate, sill and various weirs**
- **flow processes in the closed channel: pipe flow**
- **closed water circuit with tank and pump**

HM 164 is used to demonstrate different flow processes at different control structures in the open channel. In the closed channel, pressure components in a pipe are determined.

The trainer includes a transparent experimental flume with upper limit, a height-adjustable sill and a closed water circuit. The water level in the experimental section is set with an adjustable plate weir at the water outlet. With a simple alteration, the experimental flume can be used as an open or closed channel.

The water level must be low when investigating the open-channel flow. To conduct the experiment, a weir is attached to the bottom of the channel or the height-adjustable sill is used. Furthermore, the discharge under a gate can also be demonstrated. Various weirs, which can be exchanged quickly and safely, are available as control structures.

When studying the closed channel, the water level needs to be high enough that the entire experimental section is flowed through. In this case the sill is used to change the cross-section flowed through.

The static pressures and the total pressure over the cross-section are detected by measuring tubes. The pressure difference is used to calculate the flow velocity.

### Learning objectives/experiments

- open channel
  - flow over control structures: broad-crested weir, narrow-crested weir, ogee-crested weir with ski jump spillway, sill
  - discharge under a gate
  - hydraulic jump
- closed channel
  - pipe flow with constant and variable flow cross- section
  - measurement of static pressure and total pressure
  - calculation of the flow velocity



# HM 164
## Open channel and closed channel flow

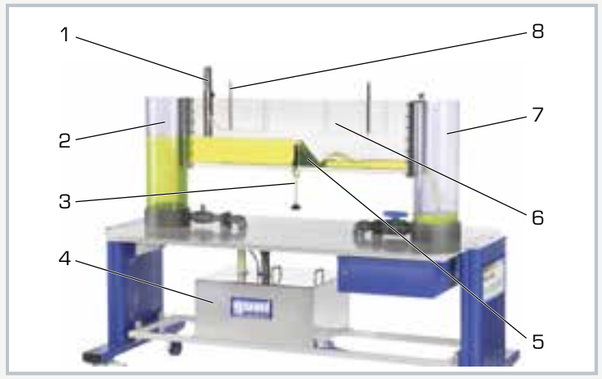


1 sluice gate, 2 water supply, 3 sill height adjustment, 4 supply tank, 5 ogee-crested weir used in the experimental flume, 6 upper limit, 7 water drain with plate weir at the water outlet, 8 measuring tube

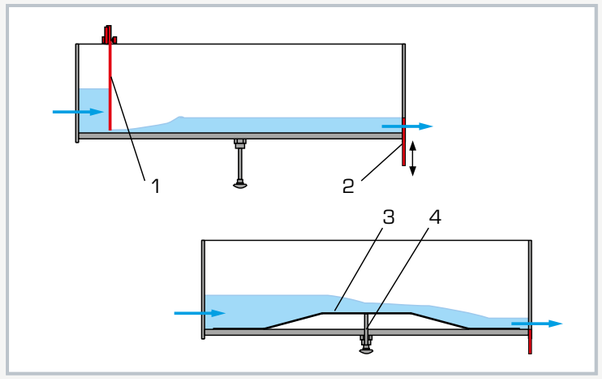


Flow processes in the open channel; 1 flow under a gate, 2 plate weir at the water outlet, 3 flow over a sill, 4 height adjustment of the sill

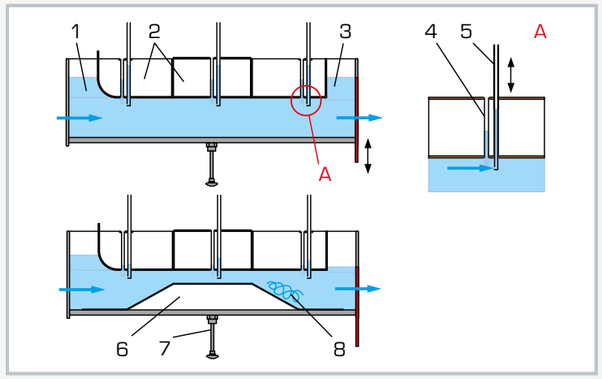


Flow processes in the closed channel; 1 inlet, 2 upper limit, 3 outlet, 4 static pressure measurement, 5 total pressure measurement, 6 sill, 7 height adjustment of the sill, 8 turbulence

### Specification

[1] investigation of flow processes in the open and closed channel
[2] experimental flume with upper limit, made of transparent material
[3] height-adjustable sill in the bottom of the experimental flume
[4] water level adjustable via plate weir at the water outlet
[5] simple conversion from open to closed channel
[6] control structures for experiments in the open channel: broad-crested weir, narrow-crested weir, ogee-crested weir with ski jump spillway, sill, gate
[7] fully flowed through experimental section and change in cross-section over sill for experiments in the closed channel
[8] closed water circuit with supply tank and pump
[9] transparent measuring tubes for measuring static pressure and total pressure

### Technical data

Experimental section
- length: 1,1m
- cross-section WxH: 40x300mm

Supply tank: 70L

Pump
- power consumption: 250W
- max. flow rate: 150L/min
- max. head: 7,6m

230V, 50Hz, 1 phase
230V, 60Hz, 1 phase; 120V, 60Hz, 1 phase
UL/CSA optional
LxWxH: 1900x800x1350mm
Empty weight: approx. 150kg

### Scope of delivery

1 trainer
1 set of control structures
1 plate weir
1 tool
1 set of instructional material

# HM 160 Experimental flume 86 x 300 mm

HM 160 is the smallest experimental flume in the GUNT range that can be used to give excellent demonstrations of all open-channel flow phenomena. Thanks to its small size and the closed water circuit, HM 160 can easily be set up and used in classrooms.

Used together with the comprehensive selection of additional accessories a wide range of topics within the field of open-channel flow can be demonstrated and investigated. These accessories include control structures, discharge measurement, losses due to changes in cross-section, waves and sediment transport. Additional accessories allow measuring the discharge depth and flow velocity.

The experimental flume HM 160 is available with two experimental sections of different lengths: 2,5 m or 5 m with an additional extension element HM 160.10 – see diagram.

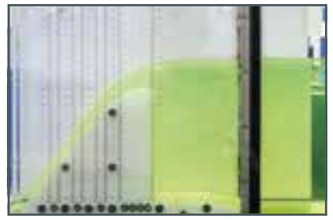

Ogee-crested weir with pressure measurement HM 160.34

Ogee-crested weir HM 160.32 and elements for energy disipation HM 160.35

Siphon weir HM 160.36

Venturi flume HM 160.51

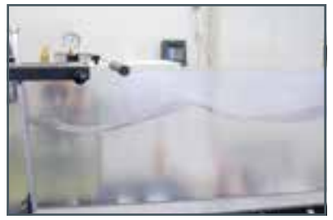

Waves in the experimental flume

Sediment feeder HM 160.73

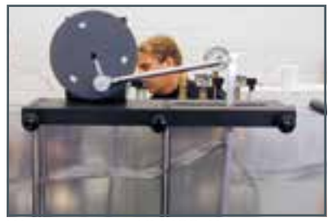

Wave generator HM 160.41

Plain beach HM 160.42

## Models available as accessories

| | |
|---|---|
| **Control structures** | **HM 160.29** Sluice gate |
| | **HM 160.40** Radial gate |
| | **HM 160.30** Set of plate weirs, four types |
| | **HM 160.31** Broad-crested weir |
| | **HM 160.33** Crump weir |
| | **HM 160.34** Ogee-crested weir with pressure measurement |
| | **HM 160.36** Siphon weir |
| | **HM 160.32** Ogee-crested weir with two weir outlets (expandable with **HM 160.35** Elements for energy dissipation) |
| **Discharge measurement** | **HM 160.51** Venturi flume |
| **Change in cross-section** | **HM 160.77** Flume bottom with pebble stones |
| | **HM 160.44** Sill |
| | **HM 160.45** Culvert |
| | **HM 160.46** Set of piers, seven profiles |
| **Other** | **HM 160.41** Wave generator |
| | **HM 160.42** Plain beach |
| | **HM 160.72** Sediment trap |
| | **HM 160.73** Sediment feeder |
| | **HM 160.61** Vibrating piles |

## Measuring instruments available as accessories

| | |
|---|---|
| **HM 160.52** Level gauge / **HM 160.91** Digital level gauge | |
| **HM 160.53** Ten tube manometers | |
| **HM 160.50** Pitotstatic tube | |
| **HM 160.64** Velocity meter | |

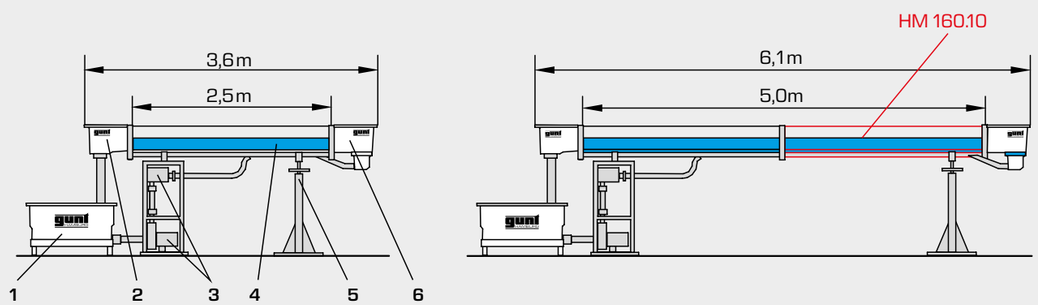


**1** water tank, **2** outlet element, **3** pump with switch box, **4** experimental section, **5** height-adjustable support incl. flume inclination adjustment, **6** inlet element

Training in Algeria

Training in Malaysia

# HM 160
## Experimental flume 86x300mm

The illustration shows HM 160 together with the ogee-crested weir HM 160.32 and the level gauge HM 160.52.

### Description

- **basic principles of open-channel flow**
- **experimental section with transparent side walls, lengths of 2,5m and 5m available**
- **homogeneous flow through carefully designed inlet element**
- **models from all fields of hydraulic engineering available as accessories**

Hydraulic engineering is concerned with artificial waterways, the regulation of rivers and with barrages, amongst other things. By using experimental flumes in the laboratory, it is possible to teach the necessary basic principles.

The experimental flume HM 160 has a closed water circuit. The cross-section of the experimental section is 86x300mm. The experimental section is 2,5m long and can be increased to 5m with the extension element HM 160.10. The side walls of the experimental section are made of tempered glass, which allows excellent observation of the experiments. All components that come into contact with water are made of corrosion-resistant materials (stainless steel, glass reinforced plastic). The inlet element is designed so that the flow enters the experimental section with very little turbulence.

The inclination of the experimental flume can be finely adjusted to allow simulation of slope and to create a uniform flow at a constant discharge depth.

A wide selection of models, such as weirs, piers, flow-measuring flumes or a wave generator are available as accessories and ensure a comprehensive programme of experiments. Most models are quickly and safely bolted to the bottom of the experimental section.

### Learning objectives/experiments

- together with optionally available models
  - uniform and non-uniform discharge
  - flow formulae
  - flow transition (hydraulic jump)
  - energy dissipation (hydraulic jump, stilling basin)
  - flow over control structures: weirs (sharp-crested, broad-crested, ogee-crested), discharge under gates
  - flow-measuring flumes
  - local losses due to obstacles
  - transient flow: waves
  - vibrating piles
  - sediment transport



HM 160
Experimental flume 86x300mm

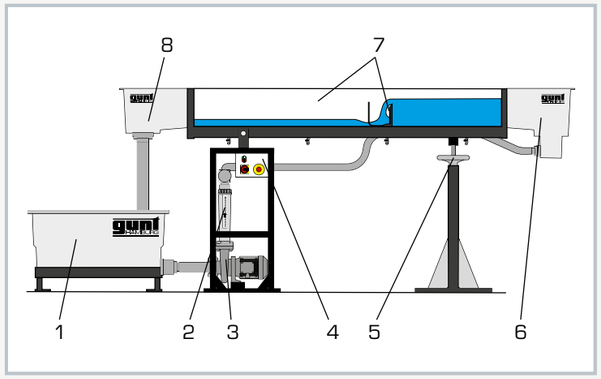


1 water tank, 2 flow meter, 3 pump, 4 switch box, 5 inclination adjustment, 6 inlet element, 7 experimental section with plate weir HM 160.30, 8 outlet element

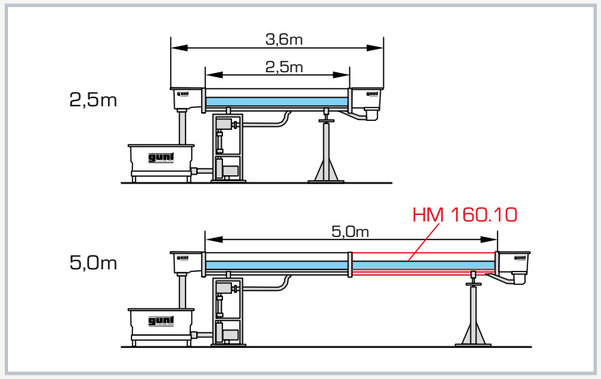


HM 160 with the two experimental sections of different lengths (2,5m or 5m). In the 5m version, an extension element HM 160.10 is required.

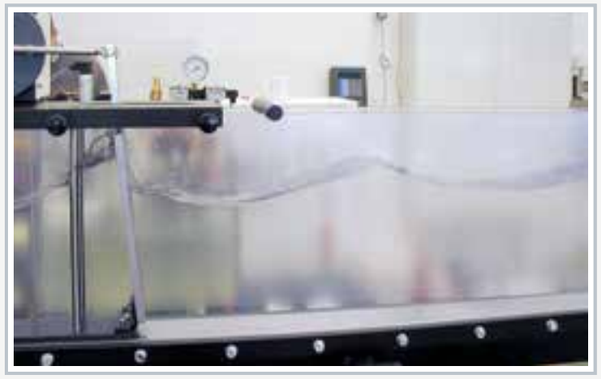

The wave generator HM 160.41 generates waves in the experimental flume.

### Specification

[1] basic principles of open-channel flow
[2] experimental flume with experimental section, inlet and outlet element and closed water circuit
[3] length of the experimental section 2,5m or 5m (with extension element HM 160.10)
[4] smoothly adjustable inclination of the experimental section
[5] experimental section with 10 evenly spaced threaded holes on the bottom for installing models or for water level measurement using pressure
[6] side walls of the experimental section are made of tempered glass for excellent observation of the experiments
[7] all surfaces in contact with water are made of corrosion-resistant materials
[8] flow-optimised inlet element for low-turbulence entry into the experimental section
[9] closed water circuit with water tank, pump, rotameter and manual flow adjustment
[10] models from all fields of hydraulic engineering available as accessories

### Technical data

Experimental section
- length: 2,5m or 5m (with 1x HM 160.10)
- flow cross-section WxH: 86x300mm
- inclination adjustment: -0,5...+3%

Tank: 280L

Pump
- power consumption: 1,02kW
- max. flow rate: 22,5m$^3$/h
- max. head: 13,7m

Measuring ranges
- flow rate: 0...10m$^3$/h

230V, 50Hz, 1 phase
230V, 60Hz, 1 phase; 120V, 60Hz, 1 phase
UL/CSA optional
LxWxH: 4300x660x1350mm (experimental section 2,5m)
Weight: approx. 500kg

### Scope of delivery

1 experimental flume
1 set of instructional material

# Series HM 150
# Introduction into the fundamentals of fluid mechanics

## Steady flow in pipes

**HM 150.11**
**Losses in a pipe system**

**HM 150.11**
Losses in a pipe system

**HM 150.01**
Pipe friction for laminar / turbulent flow

**HM 150.29**
Energy losses in piping elements

## Laminar / turbulent flow, Reynolds number

**HM 150.18**
**Osborne Reynolds experiment**

**HM 150.18**
Osborne Reynolds experiment

**HM 150.01**
Pipe friction for laminar / turbulent flow

## Bernoulli's principle / flow rate measurement

**HM 150.13**
**Methods of flow measurement**

**HM 150.13**
Methods of flow measurement

**HM 150.11**
Losses in a pipe system

**HM 150.07**
Bernoulli's principle

## Transient flow

**HM 150.15**
**Hydraulic ram – pumping using water hammer**

**HM 150.15**
Hydraulic ram – pumping using water hammer

## Turbomachines

**HM 150.04**
**Centrifugal pump**

**HM 150.04**
Centrifugal pump

**HM 150.16**
Series and parallel connected pumps

**HM 150.19**
Operating principle of a Pelton turbine

**HM 150.20**
Operating principle of a Francis turbine

## Jet forces

**HM 150.08**
**Measurement of jet forces**

**HM 150.08**
Measurement of jet forces

GUNT devices from the HM 150 series demonstrate phenomena and facilitate simple experiments on the following topics of fluid mechanics:

- steady flow in pipes
- laminar/turbulent flow, Reynolds number
- continuity equation, Bernoulli's principle
- methods of flow rate measurement
- flow from tanks
- free / forced vortex formation
- open-channel flow
- flow around bodies
- transient flow at a hydraulic ram
- turbomachines
- jet forces

## Determining the metacentre

**HM 150.06**
**Stability of floating bodies**

**HM 150.06**
Stability of floating bodies

## Steady open-channel flow

**HM 150.21**
**Visualisation of stream-lines in an open channel**

**HM 150.21**
Visualisation of streamlines in an open channel

**HM 150.03**
Plate weirs for HM 150

## Flow around bodies

**HM 150.10**
**Visualisation of streamlines**

**HM 150.10**
Visualisation of streamlines

**HM 150.21**
Visualisation of streamlines in an open channel

## Flow from tanks

**HM 150.09**
**Horizontal flow from a tank**

**HM 150.09**
Horizontal flow from a tank

**HM 150.12**
Vertical flow from a tank

## Free/forced vortex formation

**HM 150.14**
**Vortex formation**

**HM 150.14**
Vortex formation

The HM 150 base module provides a closed water circuit to supply the separate experimental units. The experimental unit is connected to the base module for the water supply via a hose. The flow rate is measured volumetrically.

All devices are designed so that they can be placed securely and stably on the base module.

# HM 150
## Base module for experiments in fluid mechanics

### Description

- **water supply for experimental units for fluid mechanics**
- **volumetric flow rate measurement for large and small flow rates**
- **comprehensive range of accessories allows a complete course in the fundamentals of fluid mechanics**

The HM 150 series of devices permits a varied experimental cross-section in the fundamentals of fluid mechanics. The base module HM 150 provides the basic equipment for individual experiments: the supply of water in the closed circuit; the determination of volumetric flow rate and the positioning of the experimental unit on the working surface of the base module and the collection of dripping water.

The closed water circuit consists of the underlying storage tank with a powerful submersible pump and the measuring tank arranged above, in which the returning water is collected.

The measuring tank is stepped, for larger and smaller volumetric flow rates. A measuring beaker is used for very small volumetric flow rates. The volumetric flow rates are measured using a stopwatch.

The top work surface enables the various experimental units to be easily and safely positioned. A small flume is integrated in the work surface, in which experiments with weirs (HM 150.03) are conducted.



HM 150
Base module for experiments in fluid mechanics

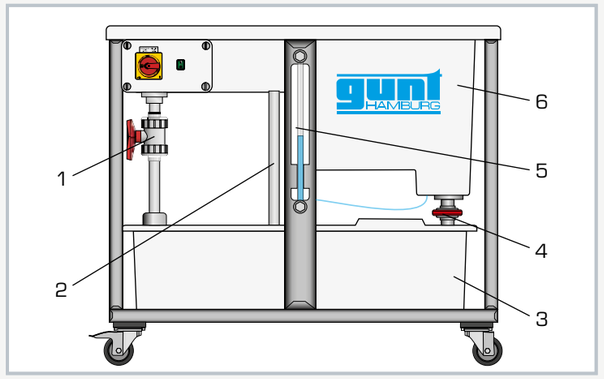


1 flow control valve, 2 overflow, 3 storage tank with submersible pump, 4 gate valve for emptying the measuring tank, 5 measuring tank level indicator, 6 measuring tank

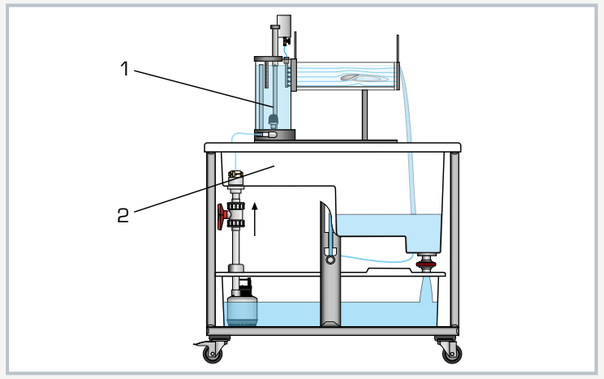


HM 150.21 (1) placed on the base module HM 150 (2)

Base module for experiments in fluid mechanics with plate weir HM 150.03

### Specification

[1] base module for supplying experimental units in fluid mechanics
[2] closed water circuit with storage tank, submersible pump and measuring tank
[3] measuring tank divided in two for volumetric flow rate measurements
[4] measuring beaker with scale for very small volumetric flow rates
[5] measurement of volumetric flow rates by using a stopwatch
[6] work surface with integrated flume for experiments with weirs
[7] work surface with inside edge for safe placement of the accessory and for collecting the dripping water
[8] storage tank, measuring tank and work surface made of GRP

### Technical data

Pump
- power consumption: 250W
- max. flow rate: 150L/min
- max. head: 7,6m

Storage tank, capacity: 180L

Measuring tank
- at large volumetric flow rates: 40L
- at small volumetric flow rates: 10L

Flume
- LxWxH: 530x150x180mm

Measuring beaker with scale for very small volumetric flow rates
- capacity: 2L

Stopwatch
- measuring range: 0...9h 59min 59sec

230V, 50Hz, 1 phase
230V, 60Hz, 1 phase; 120V, 60Hz, 1 phase
UL/CSA optional
LxWxH: 1230x770x1070mm
Weight: approx. 82kg

### Scope of delivery

1 base module
1 stopwatch
1 measuring cup
1 hose
1 manual

# 2 Steady flow

## Fundamentals of steady flow


| | |
|---|---|
| **Overview** Steady flow of incompressible fluids | 088 |
| **Overview** HM 240 Principles of air flow | 090 |
| **HM 240** Principles of air flow | 092 |
| **HM 240.03** Electronic total pressure sensor | 094 |
| **HM 240.04** Pressure distribution on a cylinder | 096 |
| **HM 240.05** Pressure losses in pipe elements | 098 |
| **HM 240.06** Heat transfer at a cylinder in transverse flow | 100 |
| **HM 241** Fundamentals of water flow | 102 |
| **Overview** HM 220 Air flow experimental plant | 104 |
| **HM 220** Air flow experimental plant | 106 |
| **HM 220.01** Venturi tube | 108 |
| **HM 220.02** Measurement of boundary layers | 110 |
| **Overview** HM 225 Exchangeable accessories for a wide range of experiments | 112 |
| **Overview** HM 225 Aerodynamics trainer Steady flow | 114 |
| **HM 225** Aerodynamics trainer | 116 |
| **HM 225.03** Bernoulli's principle | 118 |
| **HM 225.05** Flow in a pipe bend | 120 |
| **HM 225.07** Free jet | 122 |


## Steady flow of compressible fluids


| | |
|---|---|
| **Basic knowledge** Steady flow of compressible fluids | 124 |
| **Overview** Overview of the devices | 128 |
| **Overview** HM 230 Flow of compressible fluids | 130 |
| **HM 230** Flow of compressible fluids | 132 |
| **Overview** HM 172 Supersonic wind tunnel with visualisation of flow | 134 |
| **Overview** HM 172 Visualiation and pressure profile of supersonic flow | 136 |
| **HM 172** Supersonic wind tunnel with Schlieren optics | 138 |
| **HM 260** Characteristics of nozzles | 140 |
| **HM 261** Nozzle pressure distribution | 142 |


## Flow in pipe systems


| | |
|---|---|
| **Basic knowledge** Flow in pipes and valves and fittings | 144 |
| **HM 120** Losses in pipe elements | 148 |
| **HM 112** Fluid mechanics trainer | 150 |
| **HM 110.01** Set of measuring objects, brass | 152 |
| **HM 122** Pressure losses in pipes | 154 |
| **HM 111** Pipe networks | 156 |
| **Overview** HM 124 Pipe flow in a complex experimental plant | 158 |
| **HL 102** Installation technology: losses in different pipes | 160 |
| **HL 103** Installation technology: losses in pipe bends | 162 |
| **HL 113** Installation technology: losses in valves and fittings | 164 |
| **HL 210** Installation technology: losses in a pipe system | 166 |
| **HL 111** Installation technology: losses in straight pipes | 168 |


## Flow in valves


| | |
|---|---|
| **RT 390** Test stand for control valves | 170 |
| **RT 396** Pump and valves and fittings test stand | 172 |


## Methods of flow measurement


| | |
|---|---|
| **Overview** HM 500 + Accessories Methods of flow rate measurement | 174 |
| **HM 500** Flow meter trainer | 176 |


## Cavitation


| | |
|---|---|
| **Basic knowledge** Cavitation | 178 |
| **HM 380** Cavitation in pumps | 180 |
| **ST 250** Cavitation | 182 |

# Steady flow of incompressible fluids

## Fluid

Fluid mechanics is concerned with the study of forces and movements of liquids and gases. Both substances are continua whose elements can easily move against each other. They are grouped together under the term 'fluid'.

## Incompressible flow

Liquids are incompressible. In technical fields of application of fluid mechanics, **incompressibility** is also assumed for gases as long as the flow velocity remains below Mach 0,3. Based on air at 20°C this limiting value corresponds to a velocity of approximately 100 m/s and the change in density is roughly 4 %. It is therefore broadly possible to treat liquid and gas flows with common fundamental principles in fluid mechanics.

## Steady and transient flow

**Steady flow:** the velocity of a fluid particle changes with the position: **v = f(s)**.

**Transient flow:** the velocity of a fluid particle changes with the time and the position: **v = f(s,t)**.

Transient flows occur during discharge processes, during startup and shutdown processes of turbomachines or in the case of fluid oscillations and water hammer processes.

## Learning objectives

### Flow in pipe systems

Velocity profile in fully developed flow
- laminar (left)
- turbulent (right)

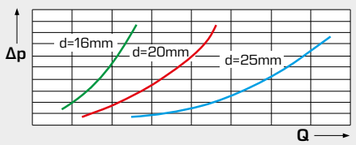


**Δp** differential pressure,
**Q** volumetric flow rate

Pressure losses in straight pipes

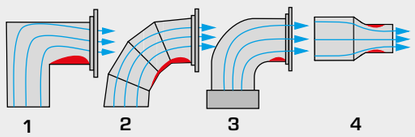


**1** pipe angle,
**2** segment bend,
**3** pipe bend,
**4** contraction

Pressure losses in pipe fittings
- enlargement / constriction / change of direction
- pipe bends
- segment bends / pipe angles

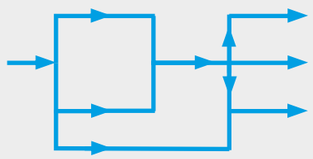

Losses in single-strand and multi-strand pipe systems

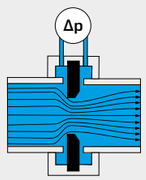


**Δp** differential pressure

Flow rate metrology: representation of the common industry measuring methods

## Learning objectives

### Cavitation

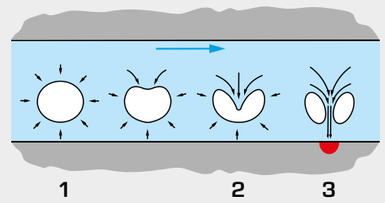


**1** formation of the vapour bubble,
**2** collapse of the vapour bubble,
**3** jet of water hits the surface and leads to material destruction

Cavitation effects in industrial piping systems: formation and consequences

### Discharge processes

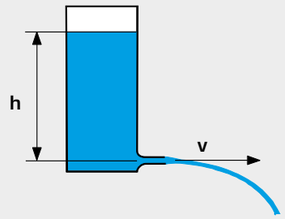


**h** head,
**v** velocity

Flows from tanks
- how the discharge cross-section and the shape affect the jet cross-section
- vertical discharge / horizontal discharge

### Flow in valves

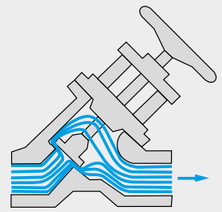

Special emphasis on technical issues
- constructions
- valve characteristics
- $K_v$ values

### Open-channel flow

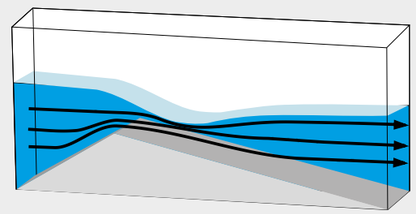

- subcritical and supercritical flow
- control structures
- discharge measurement

**This topic is covered extensively in catalogue 4b.**

For the field of **steady flow of incompressible fluids** we have tried to capture the many learning objectives found in the literature around the world within the list of learning objectives defined above. Of course, variations in some sub-fields are possible. For example, we could argue whether or not **industrial flow rate metrology** should be covered here.

GUNT provides a programme that allows to work through all of the items listed in the learning objectives in educational laboratory experiments.

# HM 240 Principles of air flow

The HM 240 base unit allows experiments on a radial fan. The unit can be used in conjunction with the extensive range of accessories to open up a large number of additional experiments on the topic of air flow.

The radial fan generates in a horizontal experimental section a flow velocity of approx. 9 m/s. The inlet nozzle ensures a turbulence-free flow and thus a homogenous velocity distribution in the experimental section. A throttle valve in the outlet can be used to throttle the fan to record characteristics. The device is fitted with sensors to measure temperature and pressure. The flow rate is determined by an inlet nozzle and pressure measurement.

- **modular system for experiments with air flows**
- **numerous experiments from fan-characteristic to heat transfer**
- **data acquisition and visualisation**

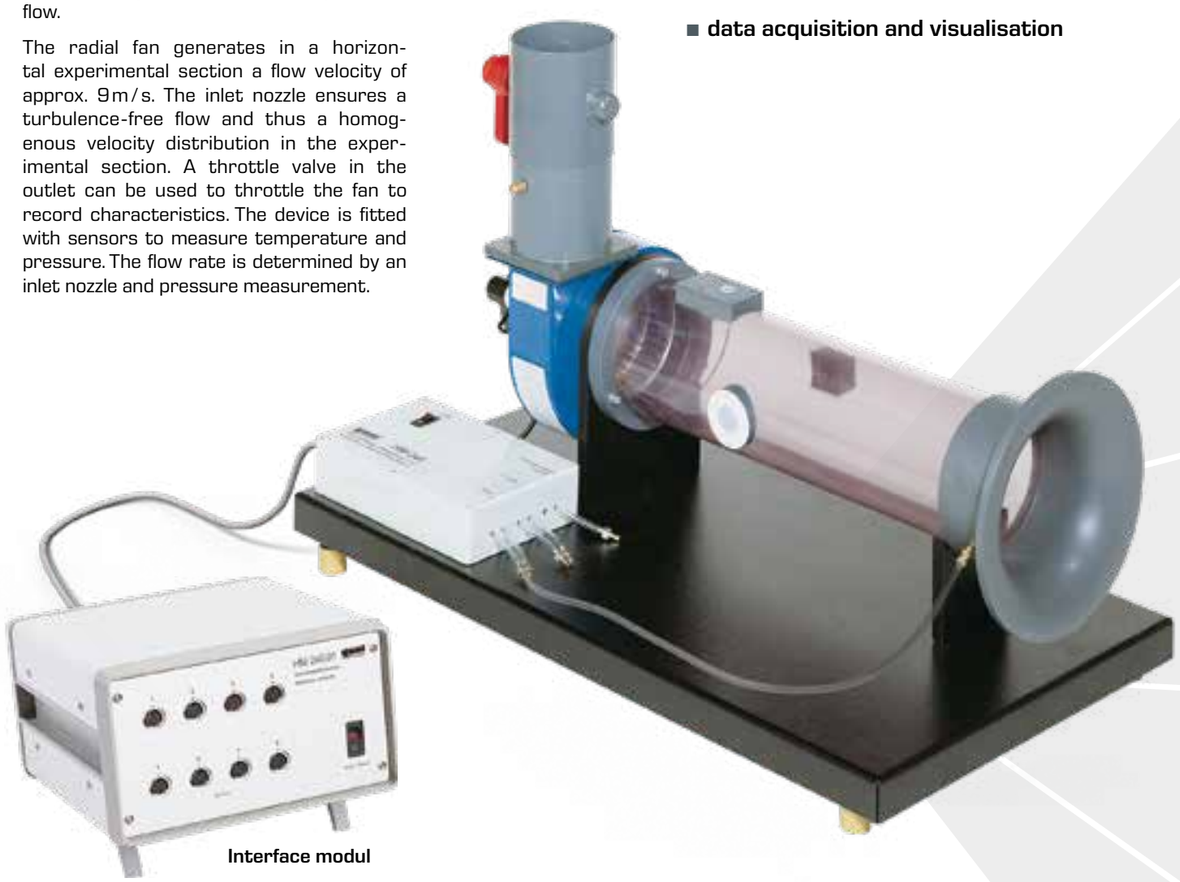

**Interface modul**

- digitisation of measurement data
- PC connection via USB

**GUNT software**
displays the measured values at the PC clearly and enables a comfortable evaluation. Various functions make it possible to graphically record the measured values and to store the results.

## Base unit and accessories enable a variety of fluid mechanics and thermodynamic experiments

**HM 240.02 Power meter**

- measurement of the electrical fan power
- determination of the fan efficiency

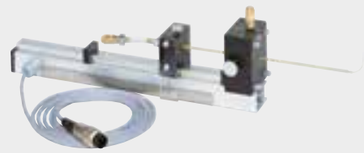

**HM 240.03 Electronic total pressure sensor**

- movable Pitot tube
- electronic record of the position
- pressure transducer in the base unit
- investigation of flow fields and recording of flow profiles

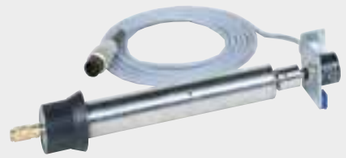

**HM 240.04 Pressure distribution on a cylinder**

The cylinder can be rotated about its axis and includes a pressure measurement hole. It is inserted transverse to the direction of flow so that air flow circulates around the cylinder. Thus the complete pressure distribution can be measured by rotating the cylinder. The angular position is measured. The pressure transducer is located in the base unit.

**HM 240.05 Friction losses in pipe elements**

The set consists of a smooth pipe section with extension, two different inlets and two different 90° deflections. All parts are fitted with pressure measurement ports so that the pressures can be measured along the pipe section. From this the friction losses for the different components can be determined.

**HM 240.06 Heat transfer at a cylinder in transverse flow**

The accessory consists of a copper cylindrical test piece and an electric heater for the test piece. The test piece is fitted with a temperature measurement point. It is heated to a defined temperature prior to the experiment and then inserted into the flow section. The cooling process occurs by forced convection in the air flow. The heat transfer on the test piece can be determined from the cooling rate.

# HM 240
## Principles of air flow

### Description

- **wide range of accessories for basic experiments with air flow**
- **record a fan characteristic**
- **GUNT software for data acquisition**

HM 240 is part of a series that allows experiments on the fundamentals of air flow. The software for data acquisition and visualisation makes the experiments especially clear and enables fast execution of experiments with reliable results.

The experimental unit includes a radial fan, which can be used to generate flow velocities up to 9m/s. An inlet contour on the intake side ensures a low-turbulence flow and thus a homogeneous velocity distribution in the measuring section. A throttle valve on the end of the pressure pipe can be used to adjust the air flow to allow the fan characteristic curve to be recorded. When used in conjunction with the power meter HM 240.02 it is possible to determine the efficiency of the fan.

Further accessories for additional experiments can be attached in the intake pipe: electronic total pressure sensor HM 240.03, pressure distribution on a cylinder HM 240.04 and heat transfer at a cylinder in transverse flow HM 240.06. To study the friction losses, the intake pipe is replaced with pipe elements from HM 240.05 (straight pipes, pipe bends and pipe angles).

Measuring points along the measuring section allow temperature, pressure and velocity measurements to be taken. The flow rate is determined by means of the inlet contour and the pressure measurement. The measured values are transmitted directly to a PC via USB. The data acquisition software is included.

### Learning objectives/experiments

- recording a fan characteristic
- in conjunction with the power meter HM 240.02
  - determining the fan efficiency
- in conjunction with corresponding accessories
  - velocity distribution in the pipe
  - velocity distribution behind a cylinder subject to transverse incident flow
  - pressure distribution around a cylinder subject to transverse incident flow
  - friction losses in pipes, pipe bends and pipe angles
  - recording the cooling curve of a copper cylinder subject to incident flow
  - determining the heat transfer coefficients from the cooling curve



# HM 240
## Principles of air flow

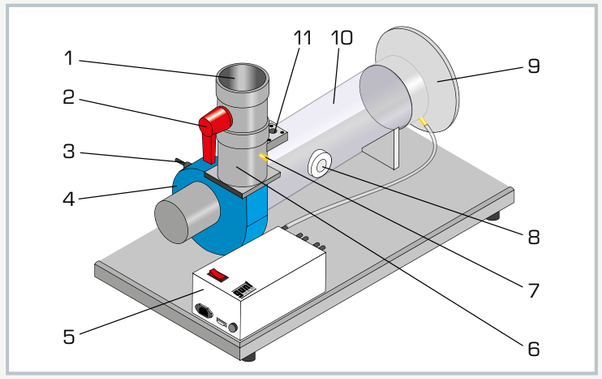


1 air outlet, 2 throttle valve for adjusting the air flow, 3 measuring point for temperature, 4 fan, 5 switch box with pressure transducer, 6 delivery pipe, 7 measuring point for pressure, 8 connector for accessory HM 240.04 / HM 240.06, 9 air inlet, 10 intake pipe, 11 connector for Pitot tube HM 240.03

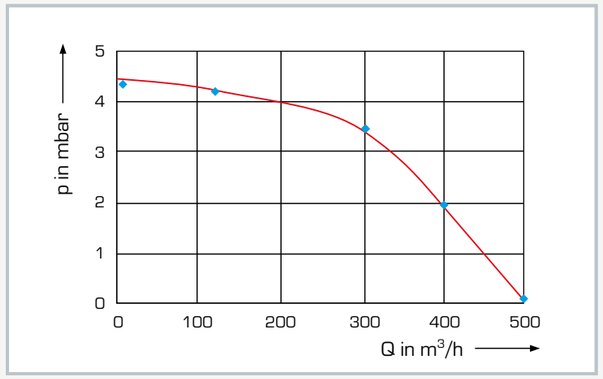


Representation of a fan characteristic
blue: measured values, red fan characteristic; p pressure, Q volumetric flow rate

Screenshot of the software together with the electronic total pressure sensor accessory HM 240.03 and pressure distribution on a cylinder HM 240.04

### Specification

[1] investigation of the principles of air flow
[2] transparent intake pipe with mounting options for additional accessories
[3] inlet contour minimises turbulence on the intake side
[4] throttle valve on the delivery pipe to adjust the air flow
[5] electronic measurement of temperature and pressure
[6] determine velocity by means of the dynamic pressure
[7] determine flow rate via differential pressure
[8] GUNT software for data acquisition via USB under Windows 7, 8.1, 10

### Technical data

Radial fan
- max. power consumption: 90W
- speed: 2800min$^{-1}$
- max. flow rate: 460m$^3$/h
- max. differential pressure: 480Pa

Delivery pipe
- outer Ø: 110mm
- inner Ø: 99,4mm

Intake pipe
- outer Ø: 140mm
- inner Ø: 134,4mm

Measuring ranges
- pressure: 1x ±10mbar
- pressure: 2x ±1mbar
- temperature: 0...200°C

230V, 50Hz, 1 phase
230V, 60Hz, 1 phase
LxWxH: 850x450x600mm
Weight: approx. 23kg

### Required for operation

PC with Windows

### Scope of delivery

1 experimental unit
1 interface module
1 set of hoses
1 GUNT software CD + USB cable
1 set of instructional material

# HM 240.03
## Electronic total pressure sensor

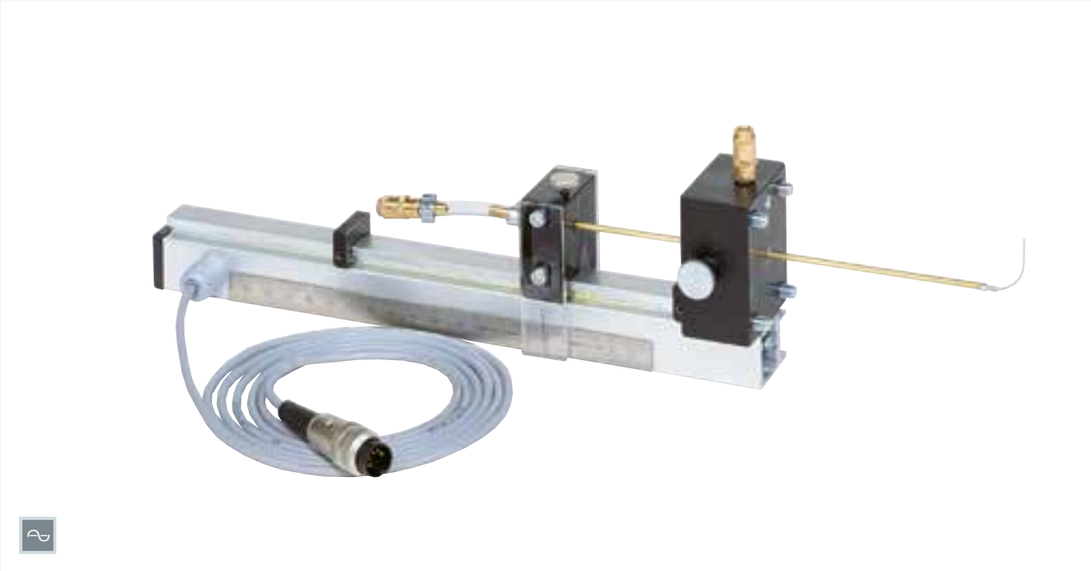

### Description

- **electronic measurement of static and dynamic pressure**
- **record pressure distribution in the wake of a cylinder in conjunction with HM 240.04**
- **accessory for HM 240**

The simplest and therefore most common type of total pressure sensor is the Pitot tube. Total pressure sensors are used to accurately measure differential pressure and to determine flow velocities of fluids. They are used for a wide range of purposes, for example to determine the airspeed in aviation, to measure wind speeds in meteorology or to determine the flow velocity in pipes.

Used in conjunction with HM 240, the HM 240.03 accessory allows the electronic measurement of static and dynamic pressure. The Pitot tube can be adjusted vertically and is attached to HM 240's intake pipe. The total pressures at various positions in the intake pipe are recorded. The position of the Pitot tube is measured electronically. An additional measuring point measures the static pressure. Both measuring points are connected to HM 240. The measured values are analysed using the HM 240 software.

In addition, used in conjunction with the HM 240.04 accessory (pressure distribution on a cylinder), it is possible to record the pressure distribution downstream of a cylinder under transverse incident flow.

HM 240.03 is part of a series that allows experiments on the principles of incompressible air flow. The software for data acquisition and visualisation makes the experiments especially clear and enables fast execution of experiments with reliable results.

### Learning objectives/experiments

- in conjunction with HM 240
  - measurement of the total pressure and the static pressure in HM 240's intake pipe
  - recording pressure distribution over the cross section
  - determining velocity distribution over the cross section
- in conjunction with HM 240.04
  - measurement of the total pressure in the wake of a cylinder
  - determine drag coefficient from the pressure distribution in the wake of a cylinder
  - demonstrate wake depression



HM 240.03
Electronic total pressure sensor

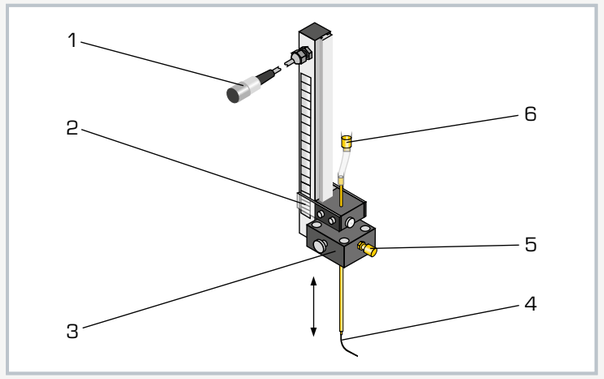


1 connection to HM 240, 2 vertical adjustment, 3 bracket, 4 Pitot tube, 5 measuring point for static pressure, 6 pressure measuring point connection to HM 240

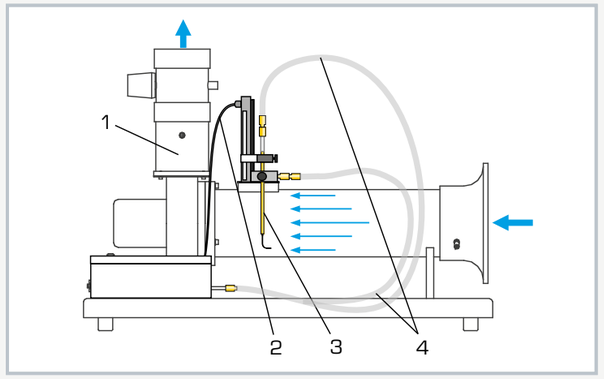


Representation of the experimental setup with HM 240
1 HM 240, 2 electronic connection to HM 240, 3 HM 240.03, 4 pressure measuring points connections to HM 240

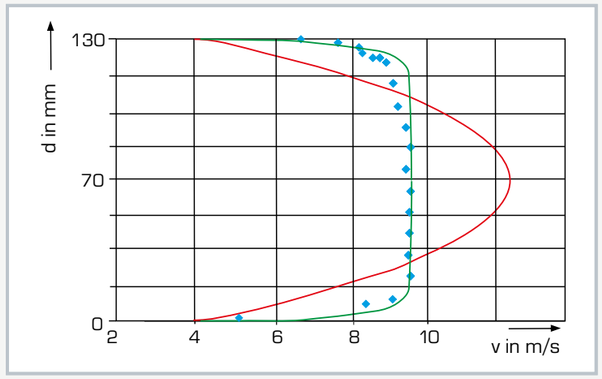


Velocity profile in the intake pipe
blue: measured values, green: turbulent flow, red: laminar flow; v velocity, d pipe inner diameter

### Specification

[1] electronic total pressure sensor for measurement of static and dynamic pressure
[2] accessory for HM 240
[3] vertical adjustment of the Pitot tube
[4] electronic detection of the position
[5] in conjunction with HM 240.04 measurement of the total pressure in the wake of a cylinder
[6] display and analysis of the measured values using the software in HM 240

### Technical data

Pitot tube
- outer diameter: 0,71mm
- inner diameter: 0,41mm
- vertical adjustment: 0...130mm

LxWxH: 120x75x350mm (retracted)
Weight: approx. 1kg

### Scope of delivery

1 holder
1 Pitot tube
1 set of instructional material

# HM 240.04
## Pressure distribution on a cylinder

### Description

- **pressure distribution on the cylinder in transverse incident flow**
- **record pressure distribution in the wake of the cylinder in conjunction with HM 240.03**
- **demonstrate flow separation and wake depression**
- **accessory for HM 240**

In order to examine the pressure distribution at bodies under incident flow, simple models such as semi-spherical shells, streamlined bodies or cylinders are used in fundamental experiments. Incident flow of 'blunt' models may lead to flow separation.

Used in conjunction with HM 240, the HM 240.04 accessory makes it possible to record the pressure distribution around a cylinder under transverse incident flow. The cylinder is attached inside the intake pipe of HM 240. The cylinder is fitted with a radial hole for pressure measurement and can be rotated around its axis. This means the pressure on the cylinder can be measured depending on the angle adjustment. The angle adjustment is detected electronically. The measured values are analysed using the HM 240 software.

In addition, a total pressure sensor (HM 240.03) that can be moved transverse to the direction of flow makes it possible to record the velocity profile downstream of the cylinder and thus to measure the wake.

HM 240.04 is part of a series that allows experiments on the principles of incompressible air flow. The software for data acquisition and visualisation makes the experiments especially clear and enables fast execution of experiments with reliable results.

### Learning objectives/experiments

- in conjunction with HM 240
  - measurement of the pressure distribution around a cylinder subject to transverse incident flow
- in conjunction with total pressure sensor HM 240.03
  - measurement of the total pressure in the wake of a cylinder
  - determine drag coefficient from the pressure distribution in the wake of a cylinder
  - demonstrate wake depression



HM 240.04
Pressure distribution on a cylinder

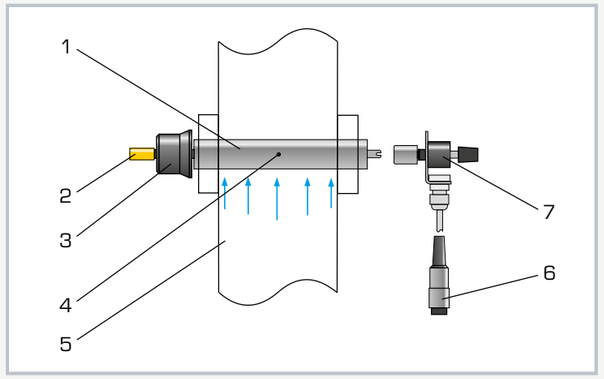


1 rotatable cylinder, 2 measuring point for pressure, 3 angle adjustment with scale, 4 measuring point for pressure, 5 HM 240, 6 connection to HM 240, 7 potentiometer

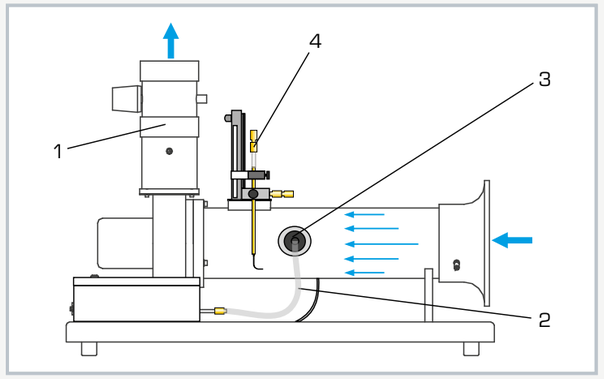


Experimental setup with HM 240 and HM 240.03
1 HM 240, 2 connection to HM 240, 3 HM 240.04, 4 total pressure sensor HM 240.03

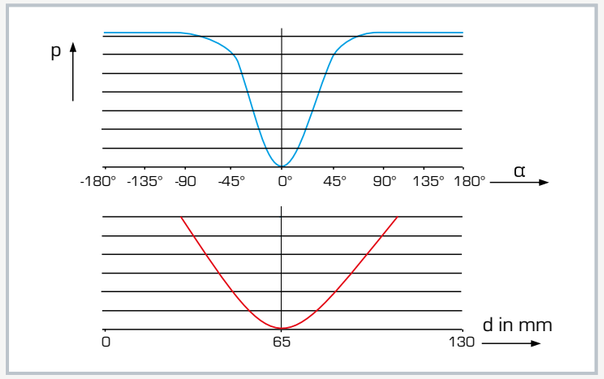


blue: pressure distribution on the cylinder in transverse flow, red: wake depression downstream of the cylinder under flow, recorded using the total pressure sensor HM 240.03; p pressure, α angle adjustment, d pipe diameter

### Specification

[1] pressure distribution around a cylinder subject to transverse incident flow
[2] accessory for HM 240
[3] cylinder with radial hole for pressure measurement
[4] rotatable cylinder for pressure measurement at any angle adjustment
[5] scale for angle adjustment
[6] electronic detection of the angle
[7] in conjunction with total pressure sensor HM 240.03 measurement of the total pressure in the wake of a cylinder
[8] display and analysis of the measured values using the software in HM 240

### Technical data

Cylinder
- outer diameter: 25mm
- inner diameter: 21mm

LxWxH: 280x85x42mm
Weight: approx. 1kg

### Scope of delivery

1 cylinder
1 set of instructional material

# HM 240.05
## Pressure losses in pipe elements

### Description

- **pressure losses in various pipe elements**
- **accessory for HM 240**

Pressure losses in the pipe flow of incompressible fluids cause pressure losses in pipes. Fundamental experiments demonstrate the pressure losses in straight pipe sections and the pressure losses due to flow separation in pipe elements such as pipe bends or enlargements.

Used in conjunction with HM 240, the HM 240.05 accessory makes it possible to record the pressure losses in various pipe elements. The pipe elements may be combined and assembled to create a variety of piping systems. The pipe is attached to the fan in place of the intake pipe in HM 240. A replaceable pipe element (sudden enlargement or uninterrupted air inlet) is attached at the pipe inlet.

Measuring points on the straight pipe sections enable measurement of the pressure losses. The velocity is detected at the pipe inlets. The measured values are analysed using the HM 240 software.

HM 240.05 is part of a series that allows experiments on the principles of incompressible air flow. The software for data acquisition and visualisation makes the experiments especially clear and enables fast execution of experiments with reliable results.

### Learning objectives/experiments

- in conjunction with HM 240
- measurement of pressure losses in
  - straight pipe sections
  - a 90° pipe bend
  - a 90° pipe angle
- investigate the effect of differently shaped pipe inlets
  - uninterrupted air inlet
  - sudden enlargement



# HM 240.05
## Pressure losses in pipe elements

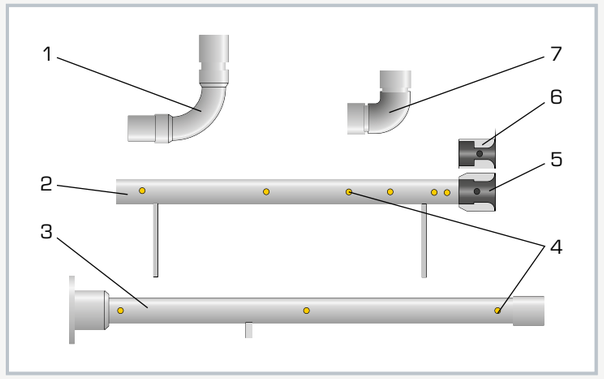


1 90° pipe bend, 2 pipe section with exchangeable pipe inlet, 3 pipe section with flange, 4 measuring point, 5 pipe inlet: uninterrupted air inlet, 6 pipe inlet: sudden enlargement, 7 90° angle

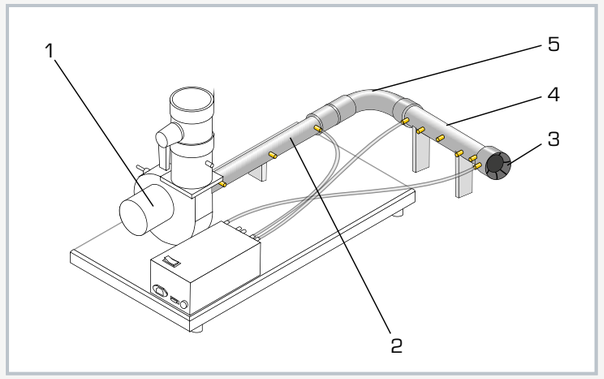


Possible experimental setup: 1 HM 240, 2 pipe section with flange, 3 pipe inlet, 4 pipe section with removable pipe inlet, 5 90° pipe bend

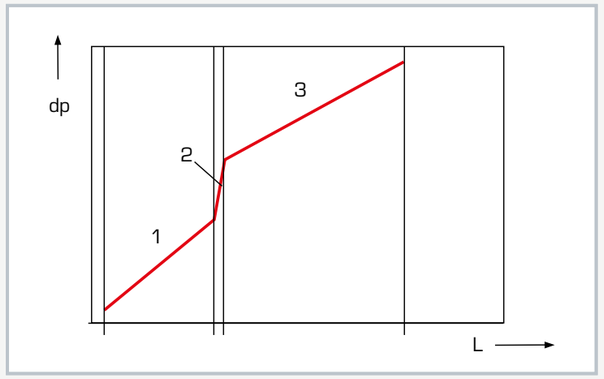


Pressure losses in pipe flow: 1 pipe section with uninterrupted air inlet, 2 90° pipe bend, 3 pipe section with flange; dp pressure losses, L pipe length

### Specification

[1] investigate pressure losses in various pipe elements
[2] accessory for HM 240
[3] combine different pipes from pipe elements
[4] two interchangeable pipe inlets: sudden enlargement or uninterrupted air inlet
[5] measuring points on straight pipe sections for pressure measurement
[6] measuring points at pipe inlets for velocity measurement
[7] display and analysis of the measured values using the software in HM 240

### Technical data

Straight pipe section with flange
- length: 1235mm
- inner diameter: d=53,6mm

Straight pipe section
- length: 991mm
- pipe inlets
  - uninterrupted air inlet: radius=22mm
  - sudden enlargement: d=35...53,6mm

90° pipe bend
- inner diameter: d=53,6mm
- radius: 2xd

90° pipe angle
- inner diameter: d=53,6mm

Weight: approx. 5kg

### Scope of delivery

1 90° pipe angle
1 90° pipe bend
1 straight pipe section with flange
1 straight pipe section
2 replaceable pipe inlets
1 set of instructional material

# HM 240.06
## Heat transfer at a cylinder in transverse flow

The illustration shows a similar unit.

### Description

- **forced convection on the cylinder**
- **cooling curve and heat transfer coefficient**
- **accessory for HM 240**

The aim of this basic experiment is to determine the heat transfer coefficients, a specific indicator, from the cooling curve. Cooling curves describe the temperature compensation between a body and its surroundings, as a function of time.

Used in conjunction with HM 240, the HM 240.06 accessory makes it possible to record the cooling curve of a cylinder in air flow. The accessory includes an oven and a copper cylinder. The large copper cylinder is heated in the oven to approximately 120°C. Then, the heated cylinder is placed in HM 240's intake pipe and cooled in an air flow.

A temperature sensor is fitted inside the cylinder. The convective heat transfer on the cylinder can be determined from the cooling rate.

The experiment can be performed for various flow rates. The measured values are analysed using the HM 240 software.

HM 240.06 is part of a series that allows experiments on the principles of incompressible air flow. The software for data acquisition and visualisation makes the experiments especially clear and enables fast execution of experiments with reliable results.

### Learning objectives/experiments

- in conjunction with HM 240
  - ▸ recording a cooling curve
  - ▸ determining the heat transfer coefficients from the cooling curve



# HM 240.06
## Heat transfer at a cylinder in transverse flow

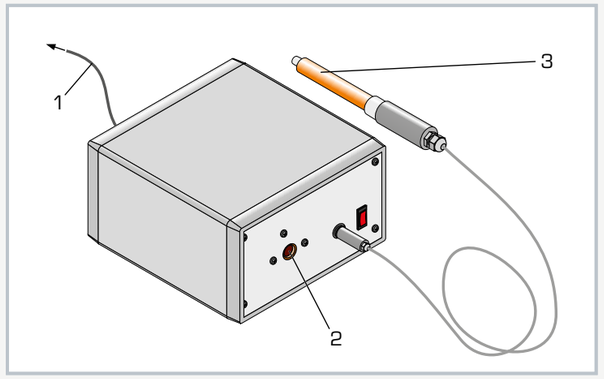


1 connection to HM 240, 2 opening of the oven, 3 copper cylinder

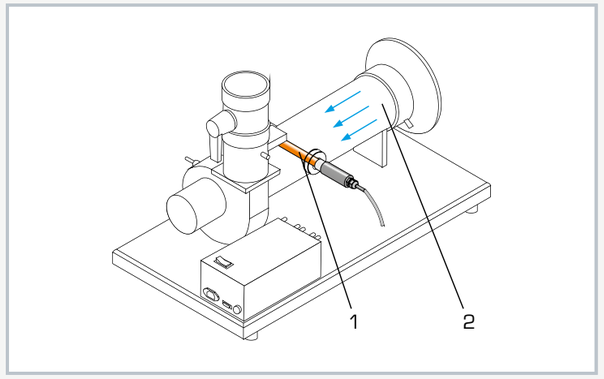


Experimental setup with HM 240
1 heated cylinder from HM 240.06, 2 HM 240

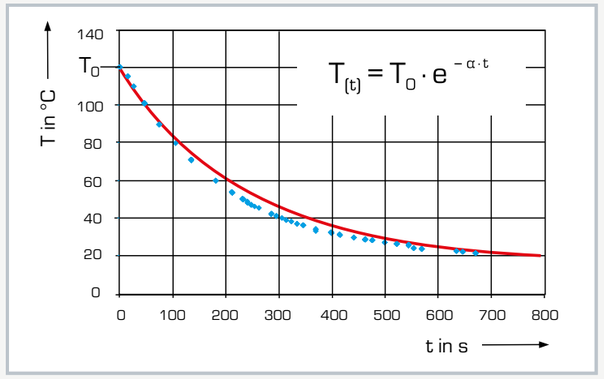


Cooling curve of the cylinder: blue: measured values, red: theoretical cooling curve;
T temperature, t time, α heat transfer coefficient, $T_0$ temperature at time t=0

### Specification

[1] convective heat transfer of a cylinder in an air-flow tube
[2] accessory for HM 240
[3] copper cylinder with integrated temperature sensor
[4] cylinder is heated in the oven to approximately 120°C
[5] oven keeps the temperature constant
[6] display and analysis of the measured values using the software in HM 240

### Technical data

Oven
- heating power: 100W

Cylinder
- material: copper
- length: 120mm
- outer diameter: 20mm

Measuring ranges
- temperature: 0...200°C

230V, 50Hz, 1 phase
230V, 60Hz, 1 phase
LxWxH: (oven): 270x260x160mm
Weight: approx. 5kg

### Scope of delivery

1 oven
1 cylinder
1 set of instructional material

# HM 241
## Fundamentals of water flow

### Learning objectives/experiments

- fundamentals of pipe flow and open-channel flow
- differential pressure measurement at the orifice, Venturi nozzle, pipe bends and pipe angles, contraction and enlargement
- investigation of weir structures in an open channel in conjunction with the power meter HM 240.02
- recording a pump characteristic

### Description

- **water flow in open channels**
- **experiments on pipe flow**
- **closed water circuit**

In the field of fluid mechanics of incompressible fluids a distinction can be made between pipe flow and open-channel flow. With sufficient pressure and flow velocity in the completely filled pipe, the flow is considered as one-dimensional for reasons of simplicity. Due to this precondition physical phenomena can easily be described and calculated. Open-channel flow in contrast is always multi-dimensional.

The compact HM 241 experimental unit enables a variety of experiments on the fundamentals of incompressible flow in open channels and pipes.

A pump supplies water from the storage tank through the supply line into the open channel or the pipe. The flow processes are clearly visible since all parts are made of transparent plastic.

In the pipe section the water flows through an orifice, a Venturi nozzle, a contraction, an enlargement as well as pipe bends and pipe angles of varying diameters. The open channel has a broad-crested weir and a sharp-crested weir. A valve is used to close off or open up the two different working sections.

A pressure sensor is located on the device for differential pressure measurement. This sensor can be connected to the measuring points in the pipe via a hose. The supply line contains a flow rate sensor to determine the flow rate.

The measured values are transmitted directly to a PC via USB. The GUNT software is included and clearly displays the results of the experiments.

The water level is determined with an electronic water level gauge.

The power meter HM 240.02 is required to measure the power consumption of the pump.



HM 241
Fundamentals of water flow

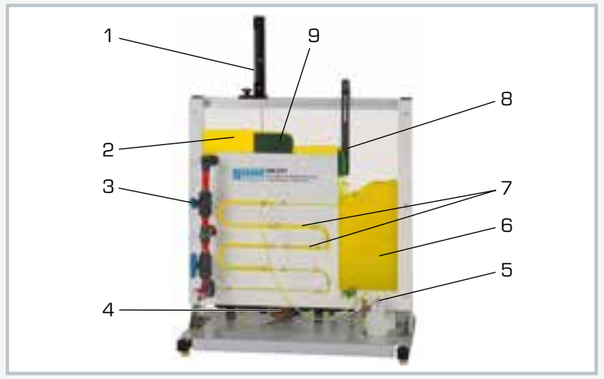


1 level gauge, 2 open channel, 3 shut-off valve, 4 pump, 5 pressure sensor, 6 storage tank, 7 pipe section with pressure measuring points, 8 sharp-crested weir, 9 broad-crested weir

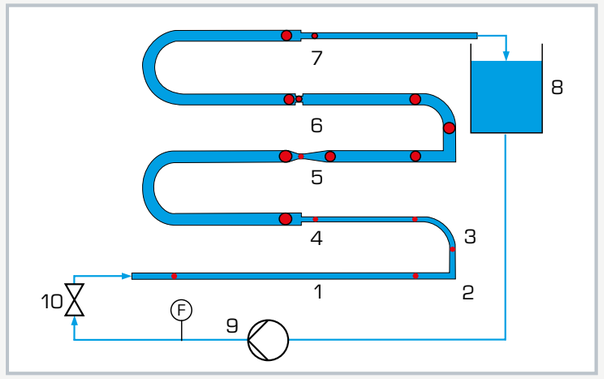


Pressure losses in pipes: 1 straight pipe section, 2 90° pipe angle, 3 90° pipe bend, 4 sudden enlargement, 5 Venturi nozzle, 6 orifice plate, 7 sudden contraction, 8 storage tank, 9 pump, 10 shut-off valve; F flow, red: pressure measuring points

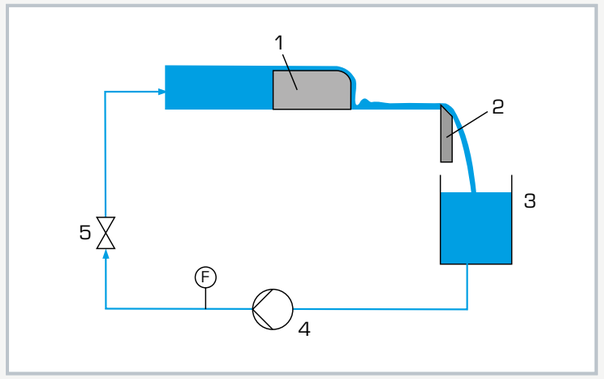


Open-channel flow: 1 broad-crested weir, 2 sharp-crested weir, 3 storage tank, 4 pump, 5 shut-off valve; F flow

### Specification

[1] investigation of the fundamentals of different areas of incompressible flow
[2] closed water circuit with pump
[3] transparent pipe section and open channel
[4] experiments on pressure losses at pipe bends and pipe angles, Venturi nozzle, orifice plate
[5] one broad-crested weir and one sharp-crested weir
[6] horizontally travelling level gauge with vertically travelling probe tip to measure the water levels
[7] pressure measuring points for differential pressure measurement before and after the respective pipe resistances
[8] measurement of the power consumption of the pump with power meter HM 240.02
[9] GUNT software for data acquisition via USB under Windows 7, 8.1, 10

### Technical data

Pump, 3 stages
- max. power consumption: 100W
- max. flow rate: 83L/min
- max. head: 6m

Electronic water level gauge
- measuring range: 0...200mm
- graduation: 1mm
- travel: max. 205mm

Measuring ranges
- differential pressure: 0...600mbar
- flow rate: 3,5...50L/min

230V, 50Hz, 1 phase
230V, 60Hz, 1 phase
120V, 60Hz, 1 phase
UL/CSA optional
LxWxH: 850x540x970mm
Weight: approx. ca. 50kg

### Required for operation

PC with Windows

### Scope of delivery

1 experimental unit
2 weirs
1 set of tools
1 electronic water level gauge
1 CD with GUNT software + USB cable
1 set of instructional material

# HM 220 Air flow experimental plant

In practice, when designing turbomachines or pipe systems it is important to know the flow course and the corresponding pressure and velocity distribution. The experimental plant HM 220, together with the extensive range of accessories, offers a variety of fluid mechanics experiments.

The illustrative experiments provide an in-depth understanding and knowledge of the physical laws of steady flows. The experiments impart knowledge about determining the flow course, pressure distribution and velocity profiles.

- use of various pipe elements
- adjustment of the air flow through a frequency converter
- up to 20 pressure measuring points
- calculation of the volumetric flow rate and the flow velocity from the measurement results
- representation of system characteristics
- recording the different velocity profiles in both the free jet and the pipe cross-section
- representation of the increase in pressure loss due to pipe friction at different pipe elements
- optimal formation of the air flow due to a low-loss inlet and the large length of the pipe section

## The HM 220 experimental plant allows an extensive range of experiments with the varied accessories:

Measuring and investigating the air flow via a Pitot tube

in a free jet

within a pipe

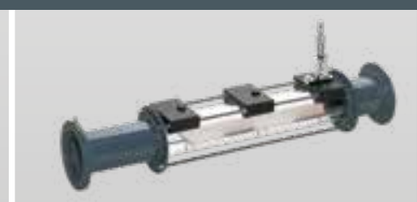

Boundary layer measurements on a flat plate in longitudinal flow via a Pitot tube (HM 220.02 accessory)

Change in volumetric flow rate

in an orifice plate or nozzle

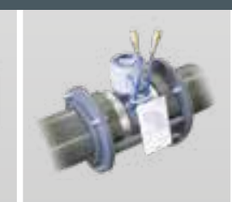

in an iris diaphragm

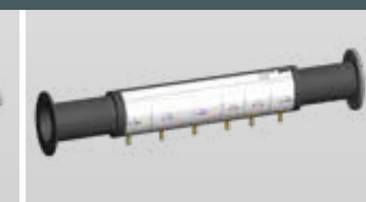

Measurement and investigation of air flow

via a Venturi tube (accessory HM 220.01)

in different pipe fittings

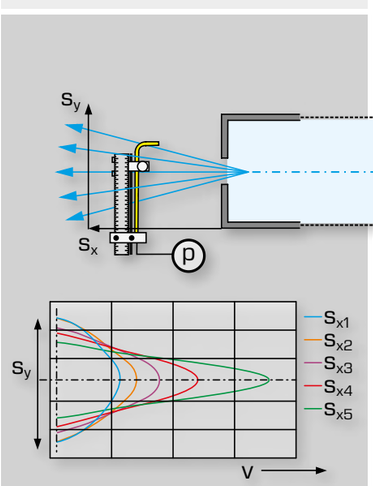


Velocity profile **v** in the air outlet jet

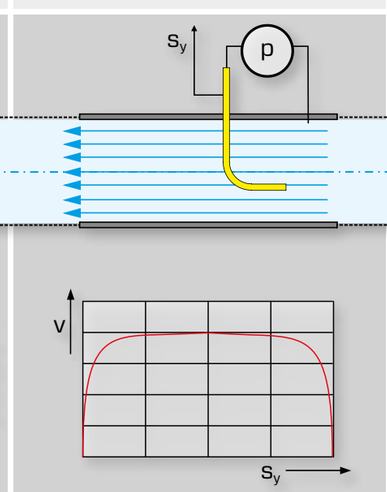


Velocity profile **v** along the pipe cross-section $s_y$

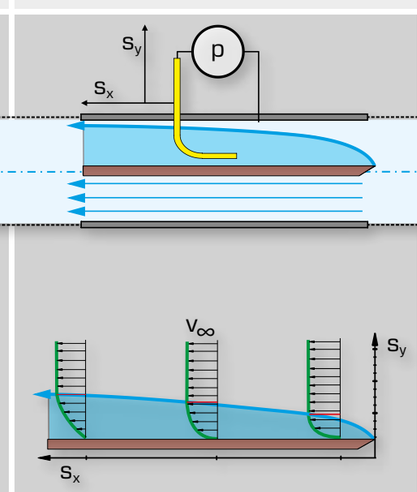


Velocity distribution (green) and boundary layer thickness (blue)

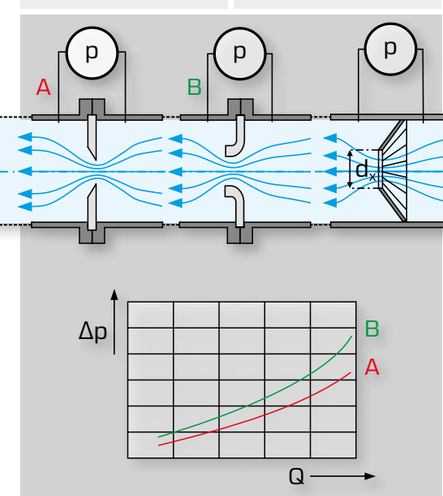


Comparison of the change in volumetric flow rate **Q** through an orifice plate **A** or nozzle **B**

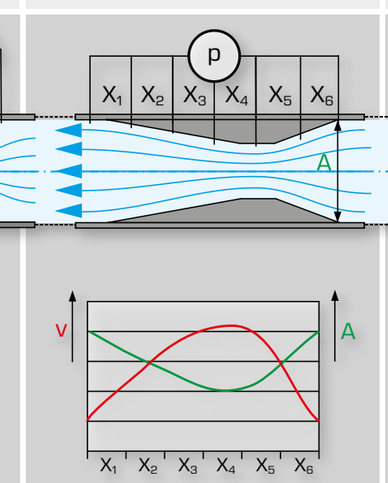


Velocity profile (red) along the contraction in cross-section (green)

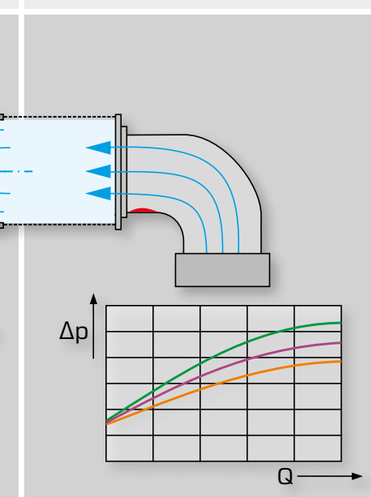


Investigation of pipe friction losses in pipe bend (green), segment bend (purple), pipe angle (orange)

# HM 220
## Air flow experimental plant

### Description

- **extensive set of matching accessories offers a wide range of experiments**
- **investigation of flow and pressure curves**
- **comparision of different ways to measure the volumetric flow rate**
- **representation of system characteristics and velocity profiles**

Fluid mechanics is concerned with the physical behaviour of fluids. An important branch of fluid mechanics is the analysis of air flow in the incompressible range in order to be able to determine the pressure distribution and the velocity profile of a flow. In practice, the findings from these experiments are necessary when devising and designing turbomachines.

With its extensive range of accessories, the HM 220 unit offers a variety of experiments in the field of steady, incompressible flow. The external Pitot tube is used to measure free jets; the inner Pitot tube allows investigation of the air flow within the pipe section. A low-loss inlet and the length of the pipe section realize an optimal formation of the air flow. The air flow can optionally be studied via a nozzle or orifice plate. An iris diaphragm allows the diameter of the air flow to be varied. Pipe friction losses on various pipe fittings can be investigated. Up to 20 pressure measuring points mean the pressure conditions along the measuring section can be determined. The pressures that are read off the tube manometer make it possible to determine the pressure distribution and flow velocity.

In addition to the extensive accessories supplied, there is the optional Venturi tube HM 220.01 for practical verification of the continuity equation and the conservation of energy during a change in cross-section of the air jet.

As an additional optional accessory, HM 220.02 offers boundary layer measurements on a flat surface in longitudinal flow. The experiment results are used to determine velocity distributions within the boundary layer and to represent the boundary layer thickness.

### Learning objectives/experiments

- experiments in the field of steady, incompressible flows by means of different measuring objects:
  - calculation of the flow rate and the flow velocity
  - recording the different velocity profiles in both the free jet and the pipe cross-section
  - representation of the pressure loss in the system characteristic
  - representation of the pressure loss at different pipe elements



# HM 220
## Air flow experimental plant

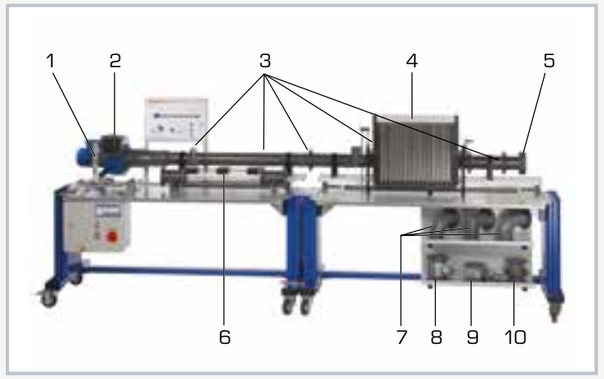


1 Pitot tube (free jet measurement), 2 radial fan, 3 different positions for measuring objects (6, 8-10), 4 tube manometer, 5 inlet, 6 accessory HM 220.02, 7 pipe fittings, 8 iris diaphragm, 9 Pitot tube (internal), 10 nozzle/orifice plate

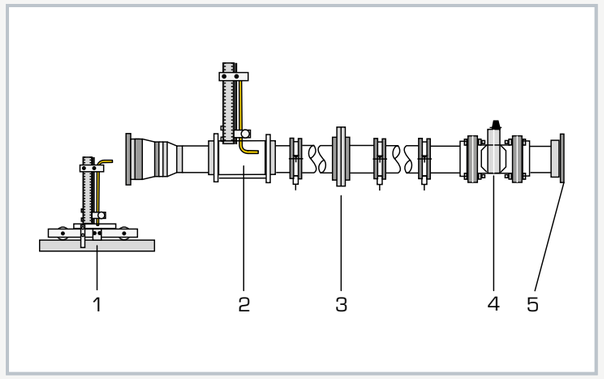


1 Pitot tube (free jet measurement), 2 Pitot tube (within the pipe section), 3 nozzle/orifice plate, 4 iris diaphragm, 5 connection of pipe fittings and the low loss air inlet

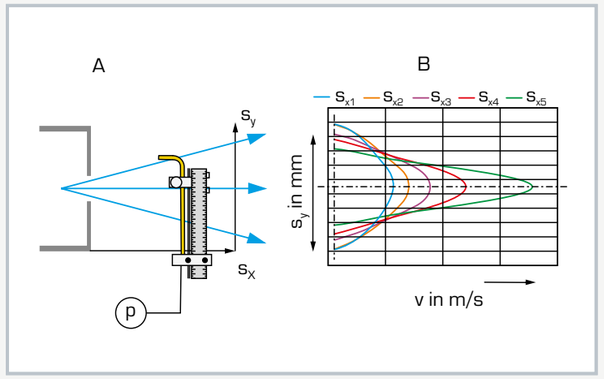


Velocity profile of the free jet
A measuring principle with schematic representation of the flow course,
B velocity profile in the air outlet jet;
v velocity, $s_x$ vertical distance, $s_y$ horizontal distance of the Pitot tube

### Specification

[1] experiments from the field of steady incompressible flow
[2] horizontal measuring section
[3] radial fan infinitely variable via frequency converter
[4] Pitot tube in the free jet, 3-dimensional adjustable
[5] Pitot tube within the pipe section, vertically adjustable at 3 positions, adjustable height
[6] different measuring objects: orifice plate, nozzle, iris diaphragm, pipe fittings
[7] 16 tube manometers for displaying the pressures

### Technical data

External Pitot tube in the free jet, 3-dimensional adjustable
- horizontal: ±140mm
- vertical: -80...120mm
- inner Ø: 2mm

Internal Pitot tube, sliding
- vertical: ±40mm
- inner Ø: 1,1mm

20 pressure measuring points

Radial fan
- max. motor power: 550W
- max. flow rate: 22m$^3$/min
- max. differential pressure: 0,73kPa

16 tube manometers
- resolution: 1-fold, 2-fold, 5-fold and 10-fold
- max. resolution: 1Pa

Iris diaphragm: Ø 40...75mm
Orifice plate/nozzle: Ø 50mm
3 pipe fittings

230V, 50Hz, 1 phase
230V, 60Hz, 1 phase
120V, 60Hz, 1 phase
UL/CSA optional
LxWxH: 3270x790x1130mm
Weight: approx. 232kg

### Scope of delivery

1 experimental plant
1 set of measuring objects
1 tube manometer
1 set of hoses
1 set of tools
1 set of instructional material

# HM 220.01
## Venturi tube

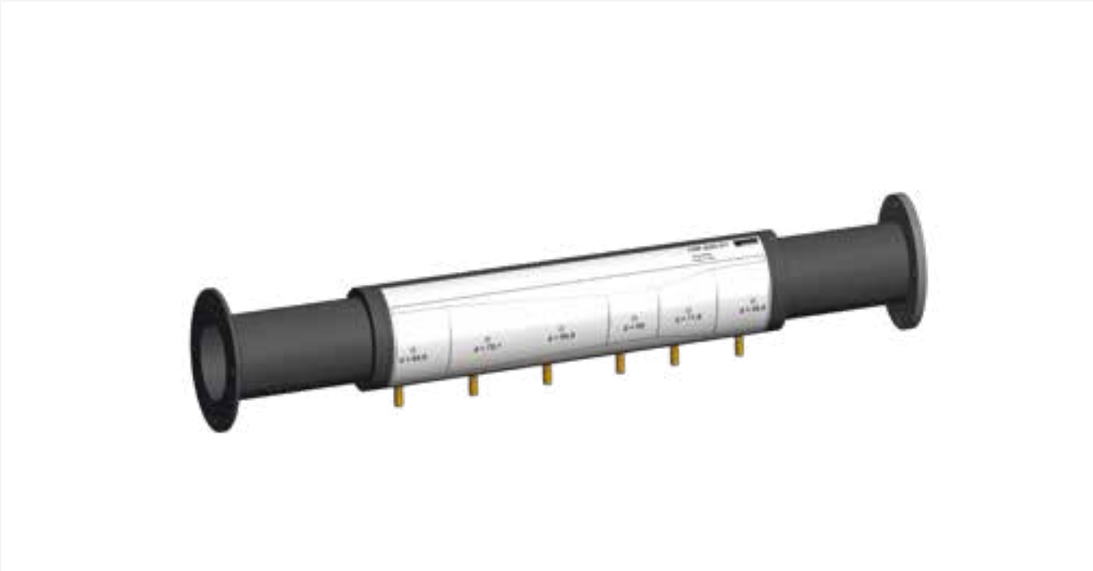

### Description

- **accessory for experimental plant HM 220**
- **investigation of the continuity equation and Bernoulli's principle**

Fundamentals of fluid mechanics include Bernoulli's principle and the continuity equation. The continuity equation states that the flow velocity in a steady, incompressible and friction-free flow is inversely proportional to the cross-sectional area. The sum of the static and dynamic pressure is constant in a steady flow, according to Bernoulli's principle. A change in the cross-sectional area leads to a corresponding change in the static pressure. These physical laws make it possible to calculate the dynamic pressure and the flow velocity of an incompressible fluid in a steady flow.

Using the Venturi tube HM 220.01 in the experimental plant HM 220 allows the continuity equation and Bernoulli's equation to be clearly and practically evaluated and applied. An in-depth understanding of the laws is promoted by means of illustrative experiments.

The accessory is placed in the measuring section to generate a Venturi-shaped cross-sectional profile of the flow. The static pressure is measured via various pressure measuring points along the measuring section and read on the manometer. The difference to the total pressure is the dynamic pressure.

### Learning objectives/experiments

- examination of the continuity equation and Bernoulli's principle
- determination of the dynamic pressure
- calculation of the flow velocity
- representation of the pressure curve as a function of the cross-sectional area



# HM 220.01
## Venturi tube

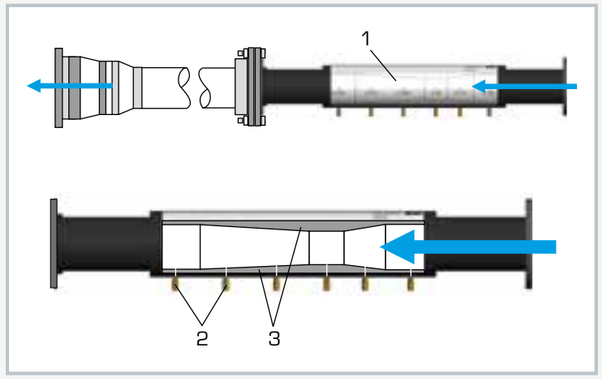


1 Venturi tube, 2 pressure measuring point, 3 Venturi-shaped contour

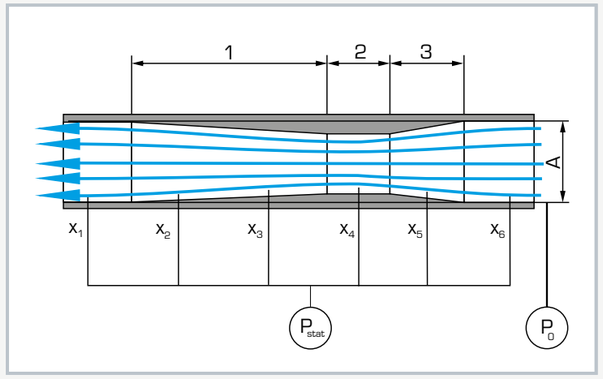


Measuring principle of the Venturi tube: 1 divergent part, 2 narrowest cross-section, 3 convergent part; A cross-sectional area, $P_{stat}$ static pressure, $P_0$ total pressure, $x_1$ ... $x_6$ pressure measuring points

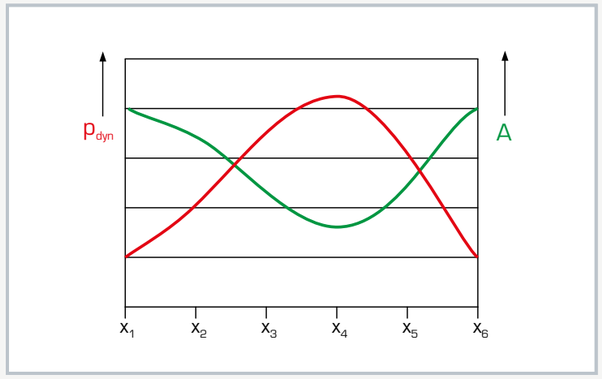


Contraction of the cross-sectional area leads to an increase of the dynamic pressure
$x_1$ ... $x_6$ pressure measuring points, A cross-sectional area, $p_{dyn}$ dynamic pressure

### Specification

[1] Venturi tube for investigating the continuity equation and Bernoulli's principle
[2] six pressure measurement points along the measuring section for measuring the static pressure
[3] accessory for experimental plant HM 220

### Technical data

Venturi tube
- inner diameter: 84,6...59mm
- 6 pressure measuring points

LxWxH: 805x150x150mm
Weight: approx. 4kg

### Scope of delivery

1 experimental unit
1 set of instructional material

# HM 220.02
## Measurement of boundary layers

### Description

- **accessory for experimental plant HM 220**
- **boundary layer measurements on a flat plate in incident flow**

The boundary layer is formed along a surface of a body in incident flow due to the adhesion of the flowing fluid, e.g. air. Internal friction in the fluid causes a change in the flow course and affects flow resistance and flow velocity. Investigations of the boundary layer provide insights that can be applied to aircraft construction or shipbuilding.

By using the experimental unit HM 220.02 in the experimental plant HM 220 it is possible to measure and study boundary layers in flows.

The flat plate is attached in the transparent pipe and subjected to longitudinal flow. In order to minimise turbulence, the leading edge of the plate is fitted with a chamfer. A vertically sliding Pitot tube is used to measure the total pressure. The total pressures can be measured at different distances to the plate surface so that the development of the boundary layer in the flow direction can be detected. An additional measuring point measures the static pressure. Both measuring points are connected to the tube manometer in HM 220. The diffenence of total and static pressure results in the dynamic pressure from which the velocity is calculated.

### Learning objectives/experiments

- investigation of the boundary layer on a flat plate
- representation of velocity profiles



# HM 220.02
## Measurement of boundary layers

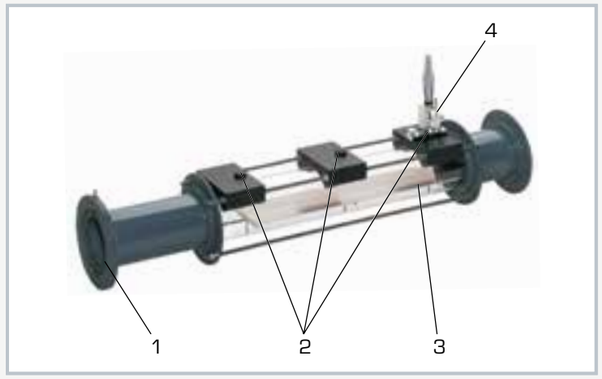


1 connection to experimental plant HM 220, 2 three horizontal positions for the Pitot tube, 3 Pitot tube with micrometre screw for vertical adjustment, 4 flat plate

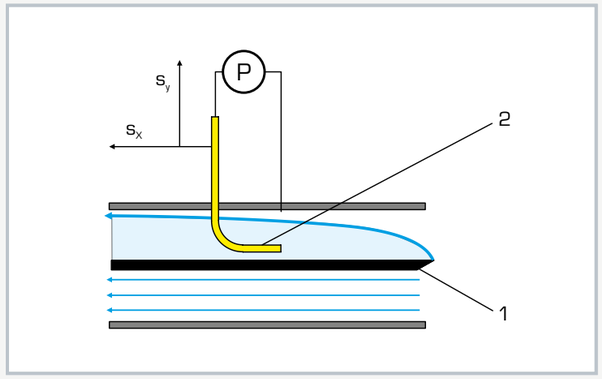


1 plate in longitudinal flow, 2 Pitot tube; P pressure, blue: air flow, $s_y$ distance from the plate surface, $s_x$ distance from the leading edge of the plate

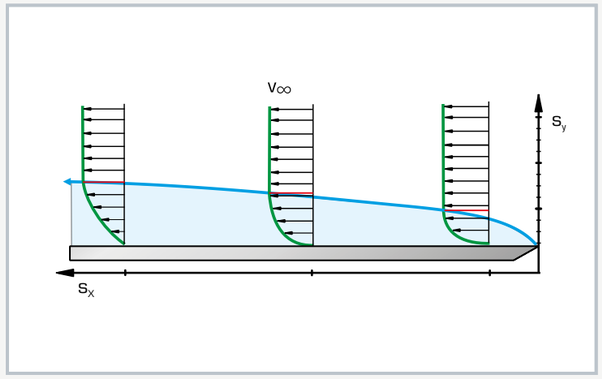


Velocity distribution and boundary layer thickness within the boundary layer of a flat plate in longitudinal flow
$s_y$ distance from the plate surface, $s_x$ distance from the leading edge of the plate,
green: velocity profile of the air flow, blue: boundary layer thickness

### Specification

[1] investigation of the boundary layer on a flat plate
[2] plate leading edge with chamfer
[3] Pitot tube for measuring the total pressure
[4] additional measuring point for measuring the static pressure
[5] vertically sliding Pitot tube can be set to 3 positions along the plate in the measuring section
[6] display of static and total pressure on the tube manometer from HM 220
[7] accessory for experimental plant HM 220

### Technical data

Pitot tube
- inner diameter: 0,6mm
- vertically sliding: 0...18mm
- measuring section with 3 positions along the plate: 10mm, 210mm and 410mm from the leading edge

Flat plate
- LxWxH: 420x80x8mm
- 15° chamfer facing the incident flow

LxWxH: 810x160x280mm
Weight: approx. 5kg

### Scope of delivery

1 experimental unit
1 set of tools
1 set of instructional material

# HM 225
# Exchangeable accessories for a wide range of experiments

## Experiments from the field: steady flow, chapter 2

**HM 225.03**
Bernoulli's principle

**HM 225.05**
Flow in a pipe elbow

**HM 225.07**
Free jet

## Experiments from the field: flow around bodies, chapter 3

**HM 225.02**
Boundary layers

**HM 225.04**
Drag forces

**HM 225.06**
Coanda effect

**HM 225.08**
Visualisation of streamlines

# HM 225 Aerodynamics trainer Steady flow

## The trainer

HM 225 is a compact trainer with an extensive range of accessories. The aerodynamics trainer offers a variety of experiments in the fields of steady flow and flow around bodies in air (see chapter 3).

The accessory can be installed and replaced quickly and easily. The compact design allows for easy handling and easy transport.

In the field of steady flow, the trainer is particularly suited to teaching measurement of the flow course, pressure distribution and velocity distribution. The measurement results can be used to represent velocity profiles.

Aerodynamic trainer HM 225 with the accessory HM 225.02 Boundary layers

## The topics

### Investigation of Bernoulli's equation

**HM 225.03**
**Bernoulli's principle**

- determination of the dynamic pressure from the measurement data via Bernoulli's principle
- calculation of the flow velocity
- representation of pressure and velocity distribution

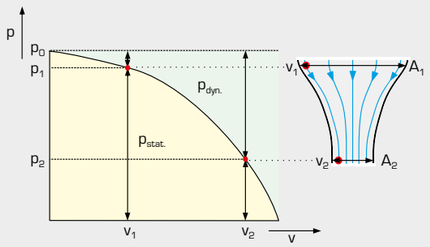


Pressure and velocity distribution along the streamlines: the yellow area represents the range of static pressure, whereas the green area represents that of the dynamic pressure; the sum of the two pressures gives the total pressure $p_0$.

**p** pressure, **v** velocity, **A** cross-sectional area

### Investigation of steady flow in a pipe bend

**HM 225.05**
**Flow in a pipe bend**

- determination of the static pressure at 28 pressure measuring points
- separation vortex and secondary flow in the pipe bend

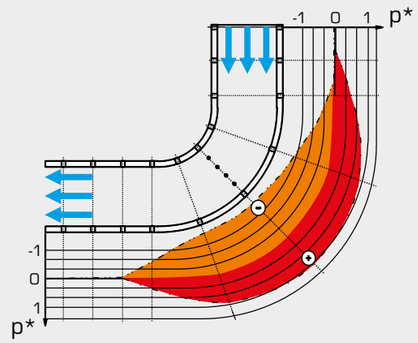


Pressure distribution in the pipe bend

low pressure area, high pressure area, **p*** related pressure change

### Investigation of flow course and pressure losses at flow outlet into resting surroundings

**HM 225.07**
**Free jet**

- recording of the pressure curve at the outlet of a parallel flow into resting surroundings
- representation of velocity profiles

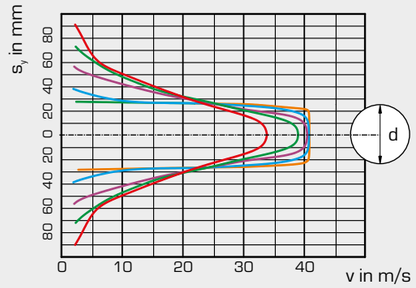


Velocity profile in the outlet

**$s_y$** distance to the centre of the pipe, **d** pipe diameter, **v** velocity

# HM 225
## Aerodynamics trainer

The illustration shows HM 225 together with HM 225.02.

### Description

- **flow velocities up to 40m/s possible**
- **homogeneous flow through the flow straightener and special nozzle contour**
- **matching accessories offer a wide range of experiments**

Aerodynamics describes the behaviour of bodies during flow around or through bodies with a compressible fluid. The knowledge of experiments in aerodynamics has a significant influence on the development of means of transport (vehicles, ships, aircraft) and in architecture (skyscrapers, towers and bridges).

HM 225 offers – along with its accessories – typical experiments from the field of flow around, incident flow and flow through models, as well as further experiments in the field of steady incompressible flow.

The trainer includes a radial fan, which can be used to generate flow velocities up to 40m/s. The speed is infinitely adjustable by using a frequency converter. A stabilisation tank with flow straightener ensures a consistent, low-turbulence and reproducible flow in the measuring section. A carefully shaped nozzle provides a largely homogeneous velocity distribution of the air flow. The accessory is attached using quick release fasteners and can be interchanged quickly and easily. Measuring points along the measuring section allow pressure and velocity measurements to be taken. The tube manometers are used to show the pressures clearly.

### Learning objectives/experiments

- together with appropriate accessories: experiments from the field of flow around bodies
  - velocity measurement of flows with Pitot tube
  - boundary layer analysis on a flat plate with flow along the plate
  - drag of bodies
  - demonstration of the Coanda effect
  - visualisation of streamlines
- together with appropriate accessories: experiments from the field of steady incompressible flow
  - velocity measurement of flows with Pitot tube and Pitotstatic tube
  - free jets
  - flow in a pipe elbow
  - proof of Bernoulli's principle



HM 225
Aerodynamics trainer

1 nozzle, 2 installation measuring section, 3 thermometer, 4 exhaust air pipe, 5 radial fan, 6 tube manometers, 7 switch cabinet with speed adjustment, 8 stabilisation tank with flow straightener

Determining drag in various drag bodies using the accessory HM 225.04

Investigation of flow in a pipe elbow with the accessory HM 225.05

### Specification

[1] aerodynamics experiments in the fields of flow around, incident flow and flow through models, as well as further experiments in the field of steady incompressible flow.
[2] vertical measuring section with flow straightener and nozzle
[3] radial fan infinitely variable via frequency converter
[4] thermometer for measuring air temperature
[5] accessory securely attached to HM 225 with quick release fasteners
[6] 16 tube manometers for displaying pressures
[7] accessories for the field of flow around bodies: Boundary Layers (HM 225.02), Drag Forces (HM 225.04), Coanda Effect (HM 225.06), Visualisation of Streamlines (HM 225.08)
[8] accessories for the field of steady incompressible flow: Bernoulli's principle (HM 225.03), Flow in a pipe elbow (HM 225.05), Free Jets (HM 225.07)

### Technical data

Radial fan
- power consumption: 0,37kW
- max. volumetric flow rate: $15m^3/min$
- nozzle exit cross-section: 50x100mm
- max. flow velocity at the nozzle exit: 40m/s

230V, 50Hz, 1 phase
230V, 60Hz, 1 phase
120V, 60Hz, 1 phase
LxWxH: 1880x800x1900mm
Weight: approx. 220kg

### Scope of delivery

1 trainer
1 set of instructional material

# HM 225.03
## Bernoulli's principle

### Learning objectives/experiments

- investigation of the continuity equation and Bernoulli's principle
- determination of the dynamic pressure from the measurement data via Bernoulli's principle
- calculation of the flow velocity from the measurement data using Bernoulli's equation
- pressure and velocity distribution

### Description

- **investigation of Bernoulli's equation**
- **determination of the dynamic pressure**
- **calculation of the flow velocity**
- **accessory for aerodynamics trainer HM 225**

The total pressure in a steady flow is constant. The sum of the static and dynamic pressures gives the total pressure. A change in the cross-section of the flow channel causes the flow velocity to vary inversely proportional to the cross-sectional area. These physical laws are fundamentals of fluid mechanics education.

The HM 225.03 experimental unit – used in the aerodynamics trainer HM 225 – allows the measurement of the total pressure and the static pressure.

A model is placed in the measuring section, which uses lateral bodies to produce a Venturi-shaped cross-sectional profile of the flow.

At the centre of the flow channel there is a Pitotstatic tube. The Pitotstatic tube has an opening opposite to the flow direction to measure the total pressure. The static pressure is measured through lateral inlet openings. Both pressures are read from the tube manometers in HM 225. The dynamic pressure is the difference between both measured values.

In order to illustrate pressure and velocity distribution, measurements can be taken at different cross-sectional areas by moving the Pitotstatic tube in the flow direction.

The experimental unit is attached to the HM 225 trainer, simply and precisely with quick release fasteners.



HM 225.03
Bernoulli's principle

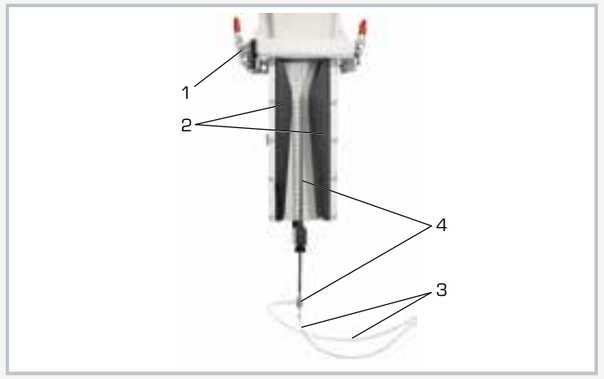


1 quick connector for connection to HM 225, 2 Venturi-shaped lateral body, 3 hose connections to the tube manometers, 4 movable Pitotstatic tube

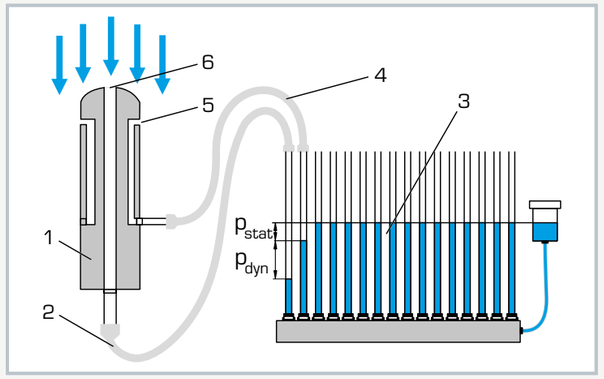


Pitotstatic tube measurement principle: 1 Pitotstatic tube, 2 total pressure, 3 tube manometer (HM 225), 4 static pressure, 5 lateral inlet opening for measuring the static pressure, 6 front inlet opening for measuring the total pressure

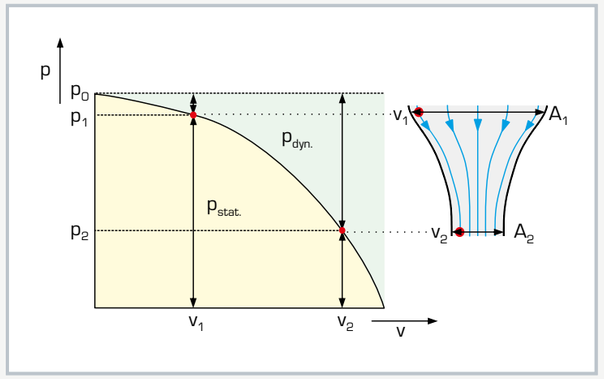


Pressure and velocity distribution along the streamlines: p pressure, v flow velocity, A cross-sectional area, $p_0$ total pressure, yellow area: static pressure, green area: dynamic pressure

### Specification

[1] investigation of the continuity equation and Bernoulli's principle
[2] measurement of the total pressure and the static pressure in a steady flow
[3] accessory for the aerodynamics trainer HM 225
[4] 16 tube manometers of HM 225 for displaying the pressures

### Technical data

Pitotstatic tube
- d=2mm
- movable: 0...290mm

LxWxH: 240x140x420mm
Weight: approx. 4kg

### Scope of delivery

1 experimental unit
1 set of hoses
1 set of instructional material

# HM 225.05
## Flow in a pipe bend

### Learning objectives/experiments

- investigation of the pressure curve at a 90° pipe bend
- determination of the static pressure at 29 pressure measuring points
- representation of the pressure distribution

### Description

- **investigation of the pressure curve at a 90° pipe bend**
- **accessory for aerodynamics trainer HM 225**

When laying pipes it is essential that they are adapted to the circumstances of their environment, which means the pipes will necessarily include deflections in the form of bends. Changing the direction of flow in a pipe changes the pressure conditions. The pressure curve during a change in the flow direction is investigated using the example of a 90° pipe bend.

The experimental unit HM 225.05, when used in the aerodynamics trainer HM 225, allows the measurement of the static pressure at 29 pressure measuring points along the pipe bend. The transparent pipe bend has a constant rectangular cross-section with 10 pressure measuring points each on the top and bottom. Pressure measuring points are located in the region of the curvature on both sides: four on the left side and five on the right side. The pressure measuring points are connected to the tube manometers in HM 225 via the hoses supplied. The static pressures can be read on the tube manometers.

To illustrate the pressure distribution, the static pressure at a measuring point is related to the maximum pressure. The graphical representation of the pressure curve shows a low pressure along the inner radius and an overpressure along the outer radius.

The experimental unit is attached to the HM 225 trainer, simply and precisely with quick release fasteners.



# HM 225.05
## Flow in a pipe bend

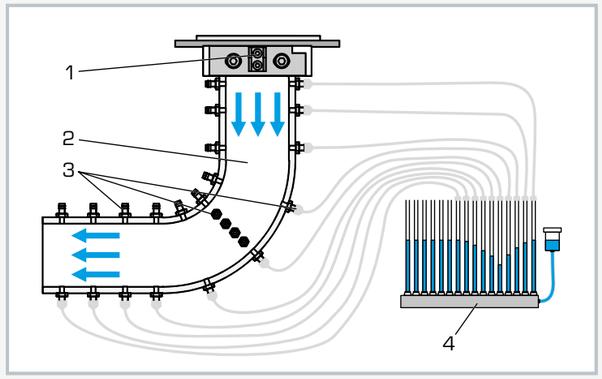


1 quick connector for connection to HM 225, 2 transparent pipe bend, 3 pressure measuring points, 4 tube manometers (HM 225)

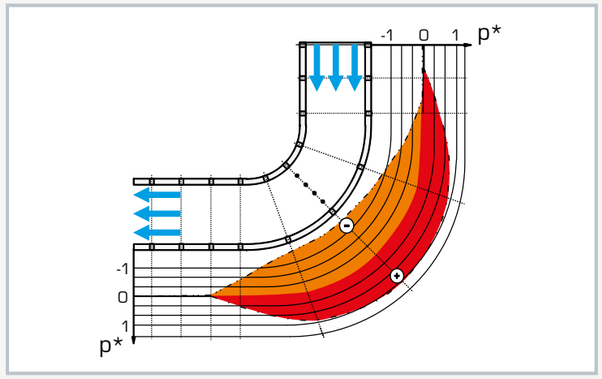


Pressure distribution in the pipe bend: p* related pressure change; orange: low pressure area, red: high pressure area

### Specification

[1] determining the pressure conditions in flow through a pipe bend
[2] measurement of static pressure at 29 pressure measuring points along the bend
[3] 29 pressure measuring points: 4 on the left side and 5 on the right side, 10 on the top side and 10 on the bottom side
[4] accessory for aerodynamics trainer HM 225
[5] 16 tube manometers of HM 225 for displaying the pressures

### Technical data

90° pipe bend: cross-section 50x100mm
29 pressure measuring points

LxWxH: 230x180x200mm
Weight: approx. 4kg

### Scope of delivery

1 experimental unit
1 set of laboratory hoses
1 set of instructional material

# HM 225.07
## Free jet

### Learning objectives/experiments

- recording the pressure curve at the outlet of a parallel flow into resting surroundings
- representation of velocity profiles

### Description

- **investigation of flow course and pressure losses at flow outlet into resting surroundings**
- **accessory for aerodynamics trainer HM 225**

Flow and pressure losses occur when a parallel flow exits into stationary surroundings. The velocity of the exiting flow decreases depending on the distance and diameter of the outlet area. The velocity decreases with increasing distance from the middle jet. The findings from the velocity profiles are used for example in the construction of nozzles and turbomachines.

The HM 225.07 experimental unit – used in the aerodynamics trainer HM 225 – allows the measurement of the velocity curve in the outlet jet. The total pressures are measured at defined distances from the outlet area in the vertical and horizontal direction by means of a movable Pitot tube.

Pressures read on the tube manometers in HM 225 can be used to determine the velocity. The graphical representation of the velocity profile indicates a decrease in velocity with increasing distance of the measurement from the middle jet and the outlet area. Vortex formation at boundary layers leads to the reduction in velocity due to the loss of energy.

The experimental unit is attached to the HM 225 trainer, simply and precisely with quick release fasteners.



# HM 225.07
## Free jet

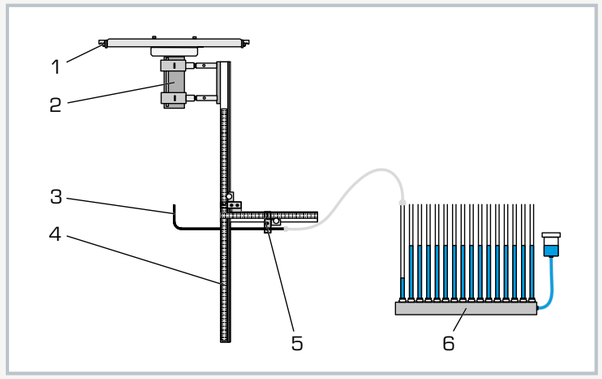


1 quick connector for connection to HM 225, 2 pipe socket for the outlet of the air flow, 3 Pitot tube, 4 scale for adjusting the vertical displacement, 5 horizontal displacement of the Pitot tube, 6 tube manometers (HM 225)

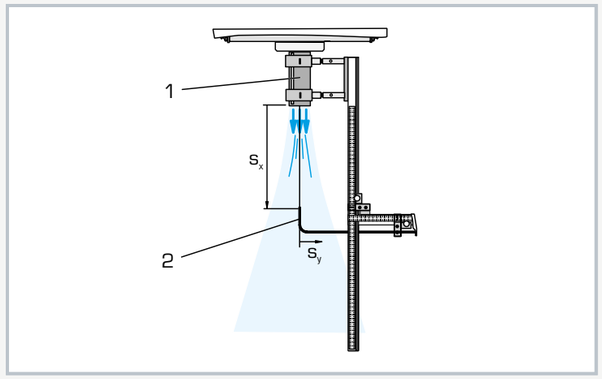


Measuring principle with schematic representation of the flow course: 1 pipe for the outlet of the air flow, 2 Pitot tube; blue area: flow course

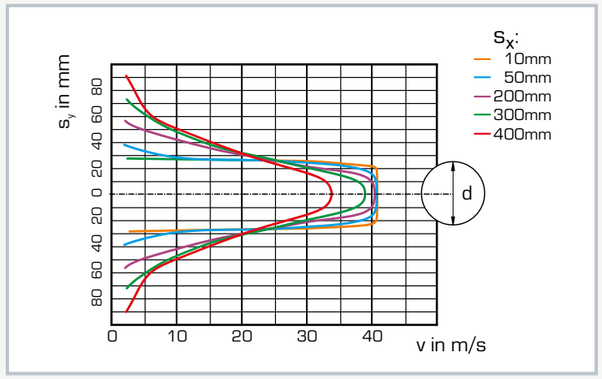


Velocity profile in the air outlet jet: $s_x$ vertical distance between the opening on the Pitot tube to the air outlet, $s_y$ horizontal distance of the opening on the Pitot tube to the centre line of the air flow, v flow velocity, d pipe inner diameter

### Specification

[1] determination of the pressure loss in the flow outlet into stationary surroundings
[2] accessory for aerodynamics trainer HM 225
[3] Pitot tube, can be moved horizontally and vertically
[4] 16 tube manometers of HM 225 for displaying the pressures is recommended

### Technical data

Pipe socket, plastic
- inner diameter: 54mm

Pitot tube, sliding
- horizontal: ±150mm
- vertical: 0...700mm
- inner diameter: 2mm

LxWxH: 720x380x940mm
Weight: approx. 7kg

### Scope of delivery

1 experimental unit
1 set of instructional material

Basic knowledge

# Steady flow of compressible fluids

## Flow with varying volume

In gases there is a difference between flow at constant volume (incompressible) and flow with varying volume (compressible). In the incompressible flow of gases the flow processes are treated like the flow of a liquid.

For larger changes in the fluid's pressure and temperature the interconnections between pressure, temperature and volume may not be ignored any more. This flow is called compressible. For ideal gases, this relation applies:

$$p \cdot V = m \cdot R \cdot T$$

Often the term "compressible flow" is used in this context, whereas the fluids are compressible not the flow.

If the velocity of gas flow is larger than Ma 0,3 it must be regarded as compressible. In air, this corresponds to approximately 100 m/s at 1 bar and 0 °C. The dynamic pressures occurring in the flow here are equal to a maximum of 60 mbar.

Below this limit, a gas flow can be considered as incompressible fluid with good approximation. The flow in a fan or the flow around a car for example, can be regarded as incompressible. However, in turbo compressors, gas and steam turbines, jets, fast planes or rockets the flow must be regarded as compressible.

## Compressible flow in engineering

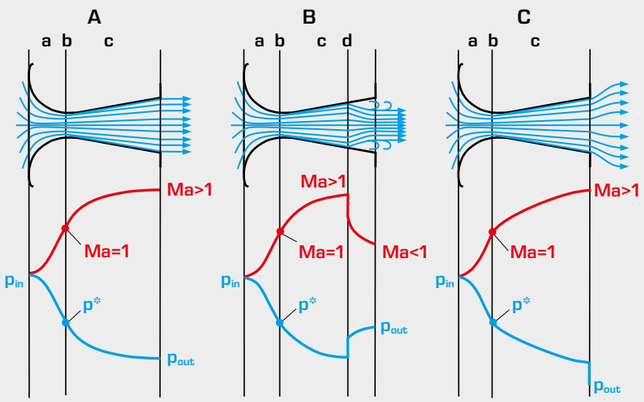


Flows through a convergent-divergent nozzle (de Laval nozzle) at different back pressures

**A** "Adapted" nozzle with ideal pressure ratio. There is supersonic speed at the nozzle outlet.
**B** Shock wave occurs in the divergent region of the nozzle, after which subsonic speed ensues. There are pressure losses due to stall.
**C** Underexpansion with jet dispersion behind the nozzle outlet. This results in pressure losses.

**a** convergent region, **b** narrowest cross-section, **c** divergent region, **d** shock wave, **p*** critical pressure ratio, **Ma** Mach number, velocity curve, pressure curve

Compressible flows play a key role in the conversion of thermal gradients into kinetic energy in thermal turbomachines. The conversion is caused by the outflow of a gas into guide vane systems or nozzles. At high differential pressures, the flow can reach or even exceed the speed of sound.

So-called de Laval or Laval nozzles are used to generate supersonic speeds. They are distinguished by their convergent-divergent shape.

In the first, convergent part the flow is brought up to the speed of sound. In the second, divergent part the flow is accelerated to supersonic speed by further expansion. During this process the flow rate through the nozzle is determined by the speed of sound in the narrowest cross section. For the convergent part of the nozzle: in the narrowest cross-section of the nozzle the speed of the fluid reaches the speed of sound. The pressure ratio at this point is called critical. The maximum mass flow is achieved at the onset of the critical pressure ratio.

Excessively high back pressures can cause a shock wave to occur in the divergent part of the nozzle, so that the rest of the nozzle operates as a subsonic diffuser and the pressure rises again.

## Supersonic flow

Supersonic flows behave differently from flows with subsonic speed in many ways, and therefore display very interesting phenomena.

Whereas subsonic flows are accelerated by reducing the cross-section and decelerated by enlarging the cross-section, in supersonic flows it is exactly the opposite.

In supersonic flows, changes in the cross-section may easily result in shock waves, whereas in subsonic flows stalling is a risk.

Basically, deceleration of supersonic velocity is caused by shock waves. In a shock wave the velocity is reduced suddenly, thereby causing a sudden increase in pressure and temperature. When talking about shock waves we distinguish between oblique shocks and normal shocks. An oblique shock abruptly reduces the velocity but does not result in subsonic velocity. On the other hand, a normal shock wave always leads to subsonic speed.

To keep the losses in supersonic diffusers small, a combination of several oblique shocks and one final normal shock is used.

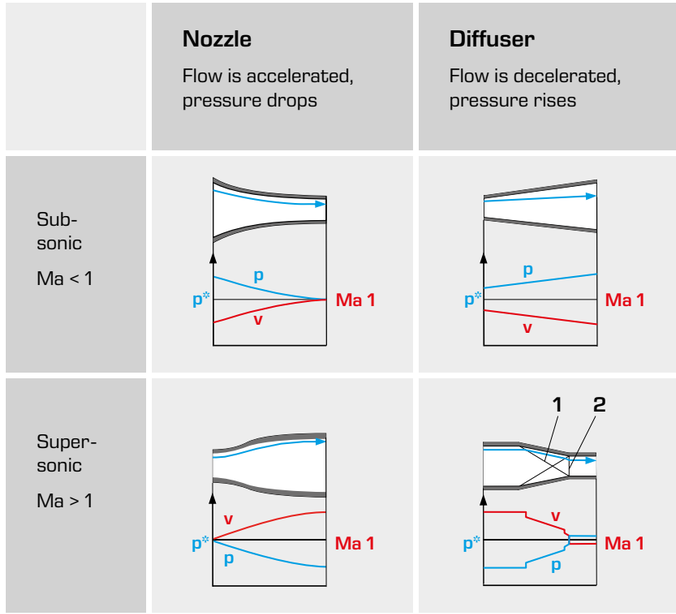


Pressure and velocity curve

**v** velocity, **p** pressure, **p*** critical pressure ratio, **1** oblique shock wave, **2** normal shock wave

**Velocity of sound in gases**

$$c = \sqrt{\kappa R T}$$

**c** speed of sound, **κ** adiabatic exponent, **R** gas constant, **T** temperature

**Mach number as a measure of the velocity**

$$Ma = \frac{v}{c}$$

**Ma** Mach number, **v** velocity of the fluid, **c** speed of sound

Basic knowledge

# Steady flow of compressible fluids

## Flow around and movement at supersonic speed

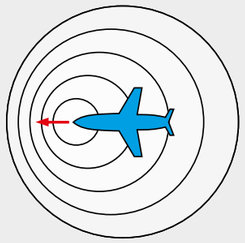

Subsonic
Ma < 1

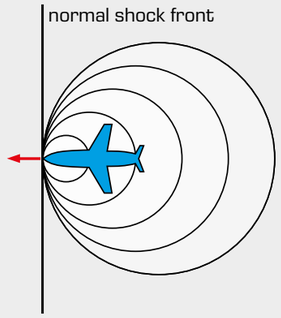


Speed of sound
Ma = 1

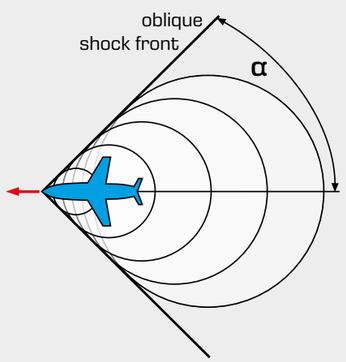


Supersonic
Ma > 1

Diffusion of sound waves at different velocities of the sound source in the medium

Whereas at subsonic speeds the sound emitted by the body also diffuses to the front, this is not so in the case of supersonic speed. Here all sound waves form a common front in the shape of a cone, the so-called Mach cone. The Mach angle of the cone is a measure of the Mach number.

**Angle of the Mach cone**

$$\sin \alpha = \frac{1}{Ma}$$

**Ma** Mach number, **α** Mach angle

A typical example of a shock front is the "sonic boom" of an aircraft flying at supersonic speed. Here, the shock front meets the observer with its abrupt change in pressure and is perceived as a bang.

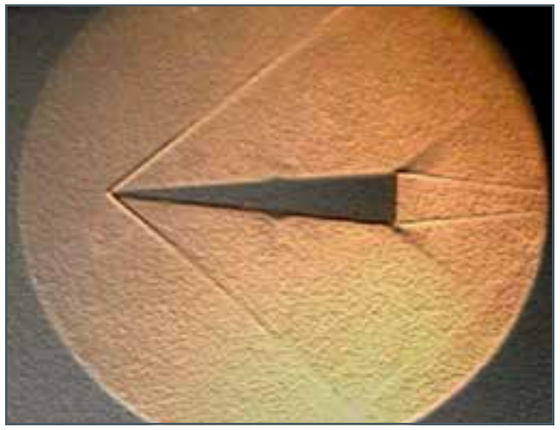

Oblique shock fronts (Mach cone) on a wedge-shaped drag body at Ma = 1,59

The table shows an abstract from a common university curriculum. GUNT devices cover this content to the greatest extent.

| Learning objectives for the field of steady flow of compressible fluids | GUNT products |
|---|---|
| **Pressure and velocity curves in pipe flow** | **HM 230** |
| **Energy equation of gaseous fluids** | **HM 230** |
| **Outflows from orifices**<br>Critical pressure ratio<br>Critical velocity | **HM 260, HM 261** |
| Speed of sound | **HM 261, HM 230, HM 172** |
| Maximum outflowing mass | **HM 261, HM 230, HM 260** |
| **Outflow from extended nozzles**<br>Behaviour of de Laval nozzle with variable back pressure | **HM 260, HM 261** |
| **Movement with speed of sound** | **HM 172** |
| Flow through column and mazes | |

Using GUNT equipment you can address the main topics of the steady flow of compressible fluids in your fluid mechanics laboratory in detail.

The compact HM 172 Supersonic wind tunnel offers outstanding possibilities in the visualisation of supersonic flows.

# Overview of the devices

## GUNT devices offer experiments in the field of steady flow of compressible fluids

### HM 230 Flow of compressible fluids

- pressure losses in straight pipes and pipe bends
- supersonic flow in the de Laval nozzle
- measuring objects made of transparent material provide an excellent insight into the inner structure.

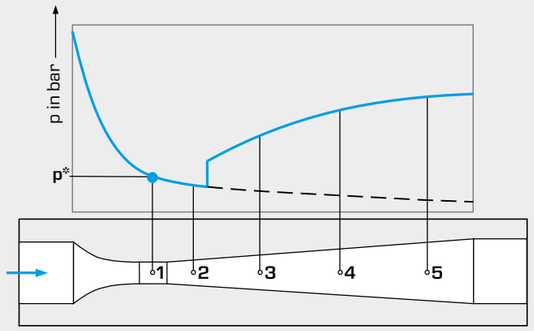


Pressure curve in the de Laval nozzle in compressible flow

pressure curve with shock wave,
pressure curve without shock wave,
**1-5** pressure measuring points, **p*** critical pressure

### HM 172 Supersonic wind tunnel with Schlieren optics

- achievable Mach numbers < 1, 1,4 and 1,8
- visualisation of the flow with the Schlieren optics supplied and typical drag bodies (wedge, double wedge, projectile and rocket)
- GUNT software for data acquisition and displaying the pressure curves

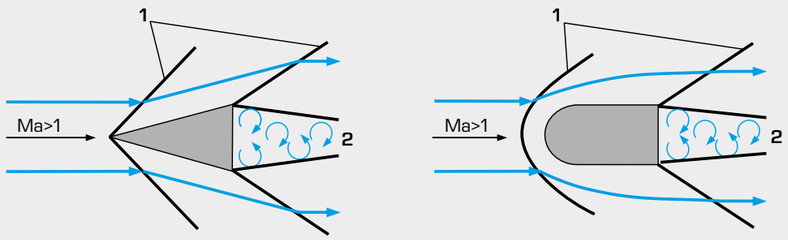


Shock fronts on the wedge and at the blunt body

**1** shock fronts,
**2** dead wake region with turbulence,
streamlines

### HM 260 Characteristics of nozzles

- determining the action or reaction forces at the nozzle and the nozzle efficiency
- using bending beams to measure force
- convergent nozzle, convergent-divergent nozzle and baffle plate

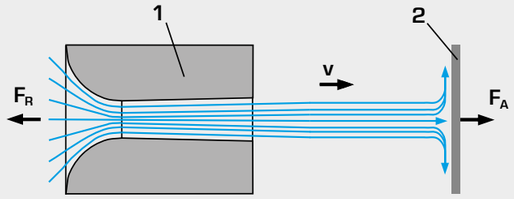


Force measurement

**1** nozzle, **2** baffle plate, $F_R$ reaction force (thrust), $F_A$ action force (impact force), **v** velocity

### HM 261 Nozzle pressure distribution

- measuring the pressure curve in the nozzle
- determining velocity of sound and shock wave
- convergent nozzle, two convergent-divergent nozzles with different nozzle extensions

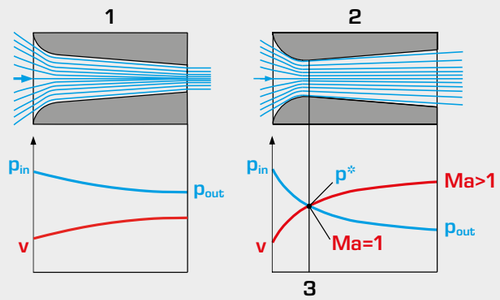


Pressure and velocity curves in different nozzles

**1** convergent nozzle, **2** convergent-divergent nozzle (de Laval nozzle), **3** narrowest cross-section, **p*** critical pressure ratio, **Ma** Mach number, **v** velocity

# HM 230 Flow of compressible fluids

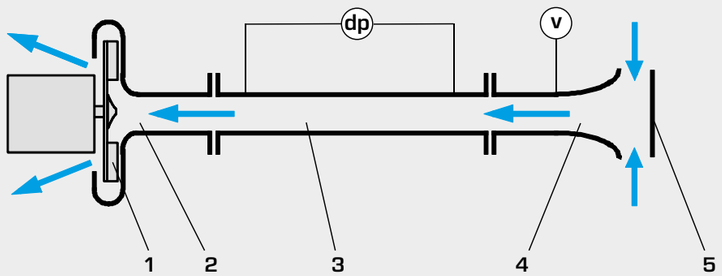


**1** fan, **2** inlet, **3** interchangeable measuring object (pipe section),
**4** measuring nozzle, **5** protective plate; **dp** pressure differential, **v** velocity

The basics of compressible air flow can ideally be taught with the extensive programme of HM 230. Through a variety of experiments the students acquire a broad knowledge and understanding of the flow of compressible fluids. An introduction to the topic of transonic flow is covered with a nozzle designed specifically for the supersonic range.

- complete course offers experiments on subsonic and transonic flow
- all components clearly arranged on a plate
- measuring objects made of transparent materials show the inner structure and the nozzle contour
- velocities up to Ma 1
- pressure differences in the system to 600 mbar

## Measuring objects

Throttle valve

Pipe bend

Pipes

Orifice

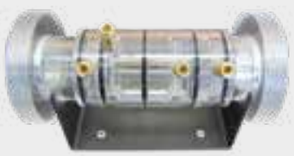

Nozzle with discontinuous enlargement

Nozzle with continuous enlargement (de Laval nozzle)

## Determining the mass flow

The measuring nozzle at the air inlet is used for low-loss acceleration of the air and is placed in front of each measuring object. A protective plate prevents larger objects from being accidentally drawn in and clogging the intake.

The pressure is measured in the measuring nozzle and used to calculate the flow velocity, in order to then determine the mass flow.

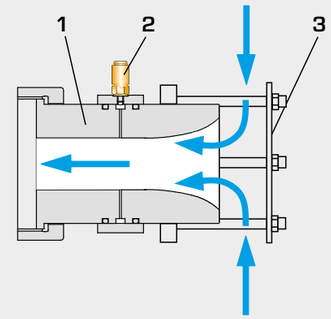


**1** measuring nozzle,
**2** pressure measuring point,
**3** protective plate

## Scope of the experiment

The experimental unit provides the study of pressure losses in pipe sections and in the pipe elbow, calibration of orifice plates, nozzles flows in the subsonic range and in the transonic range.

**Example of an experimental set-up: record calibration curves for an orifice**

- determine volumetric flow rate using differential pressure at the orifice
- comparison of two orifice disks for the measuring range 0...200 mbar and comparison of two orifice disks for the measuring range 0...1 bar
- comparison of orifice and measuring nozzle (determining the mass flow in the measuring nozzle at the air inlet is used as a reference)

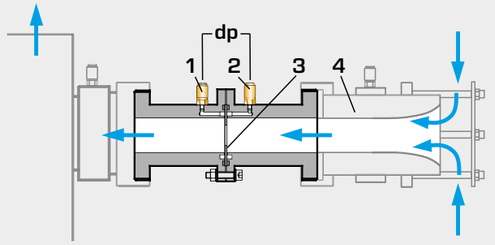


**1-2** pressure measuring points in front of and behind the orifice disk,
**3** interchangeable orifice disk, **4** measuring nozzle;
calibration curve, **Q** mass flow, **dp** pressure differential

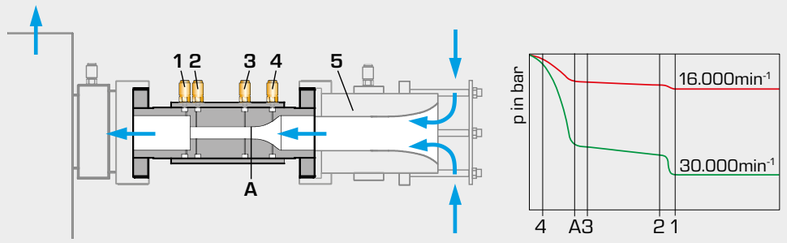


**1-4** pressure measuring points, **5** measuring nozzle;
and pressure curves, **A** beginning of the narrowest nozzle cross-section

**Example of an experimental set-up: record pressure curves in the nozzle with discontinuous extension**

- pressure curve in the convergent and cylindrical part of the nozzle
- pressure loss at the discontinuous enlargement
- comparison with pressure loss in the de Laval nozzle

# HM 230
## Flow of compressible fluids

### Description

- **investigation of flow in compressible fluids**
- **varied range of experiments for studying subsonic and transonic flow**
- **de Laval nozzle generates velocities up to Ma 1**

Compressible fluids change their density due to pressure change in the flow. Flows with velocities less than Ma 0,3 are regarded as incompressible and the change in density is negligible. At higher velocities, the density has to be included in calculations. These conditions must be taken into consideration when designing e.g. turbo compressors, jets and fast planes.

The HM 230 experimental unit is used to investigate air flow in various ranges of velocity.

A radial fan with infinitely variable speed control draws in air from the environment. At the intake the air flow is accelerated in a measuring nozzle. Further down the measuring section the air flows through interchangeable measuring objects. Drawing in the air and the arrangement of the measuring objects on the intake side of the fan minimise turbulence when flowing into the measuring objects. All measuring objects are made of transparent material and provide excellent insight into the inner structure.

Pressure losses are studied in a pipe elbow, various pipe sections and a nozzle with sudden enlargement. The nozzle with gradual enlargement (de Laval nozzle) provides an introduction to the topic of transonic flow. The volumetric flow rate is measured in an orifice using a differential pressure manometer. The orifice is fitted with four interchangeable orifice disks for different measurement ranges. The fan's characteristic curve can also be recorded by using a throttle valve.

The measured values for volumetric flow rate, pressure and speed are displayed digitally.

### Learning objectives/experiments

- pressure losses in pipes and pipe elbows
- flow in convergent/divergent nozzles
- supersonic flow in the de Laval nozzle
- determine the speed of sound in air
- compare calculation methods for incompressible and compressible flow
- use complete continuity equation
- determine mass flow using nozzle and volumetric
  flow rate using orifice
- record calibration curve for orifice
- record fan characteristic curve at different mass flows and speeds



# HM 230
## Flow of compressible fluids

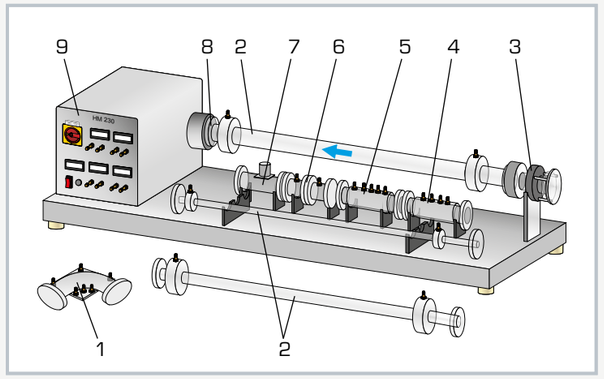


1 pipe elbow, 2 pipe section, 3 measuring nozzle, 4 nozzle with sudden enlargement, 5 nozzle with gradual enlargement (de Laval nozzle), 6 orifice, 7 throttle valve, 8 suction opening fan, 9 switch cabinet with display and control elements (integrated radial fan)

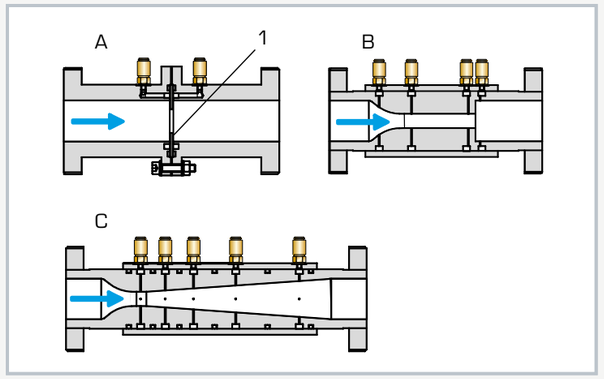


Measuring objects
A orifice, 1 interchangeable orifice disks, B nozzle with sudden enlargement, C nozzle with gradual enlargement (de Laval nozzle)

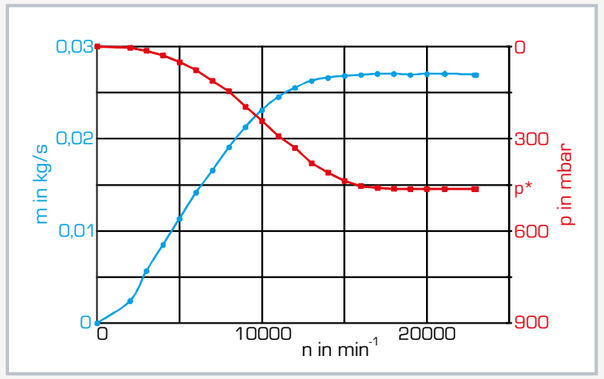


Experimental result "nozzle flow and critical pressure ratio", de Laval nozzle: blue: mass flow rate, red: negative pressure, black: speed; p* critical pressure

### Specification

[1] investigate flow of compressible fluids
[2] subsonic and transonic air flow
[3] variable speed on the radial fan for adjusting the mass flow
[4] minimised turbulence by drawing in air and optimum arrangement of the measuring objects
[5] transparent measuring objects with connectors for pressure measurement provide insight into the internal structure
[6] measuring nozzle for determining the mass flow
[7] pressure losses in subsonic flow in pipe elbows and various pipe sections
[8] pressure curve at subsonic and transonic nozzle flow
[9] orifice for determining volumetric flow rate by differential pressure measurement
[10] record fan characteristic curve using a throttle valve
[11] digital displays for pressures, velocity and speed

### Technical data

Radial fan
- max. speed: 31000min$^{-1}$
- max. volumetric flow rate: 226m$^3$/h
- max. head: 318mbar
- max. power consumption: 1,8kW

Measuring objects
- pipe section: 1m
  - diameter: 16, 24, 34mm
- 90° pipe elbow
- 2 nozzles, inner diameter: 12...34mm
  - with sudden enlargement
  - with gradual enlargement (de Laval nozzle)
- orifice with orifice disks
  - diameter: 12, 19, 25, 32mm
- throttle valve, diameter: 34mm

Measuring ranges
- speed: 0...99999min$^{-1}$
- pressure:
  - 1x 0...25mbar
  - 1x 0...600mbar
  - 1x 0...1000mbar
- velocity: 0...65m/s

230V, 50Hz, 1 phase
120V, 60Hz, 1 phase, 230V, 60Hz, 1 phase
UL/CSA optional
LxWxH: 1750x600x350mm
Weight: approx. 50kg

### Scope of delivery

1 experimental unit
1 set of measuring objects
1 set of tools
1 set of instructional material

# HM 172
# Supersonic wind tunnel with visualisation of flow

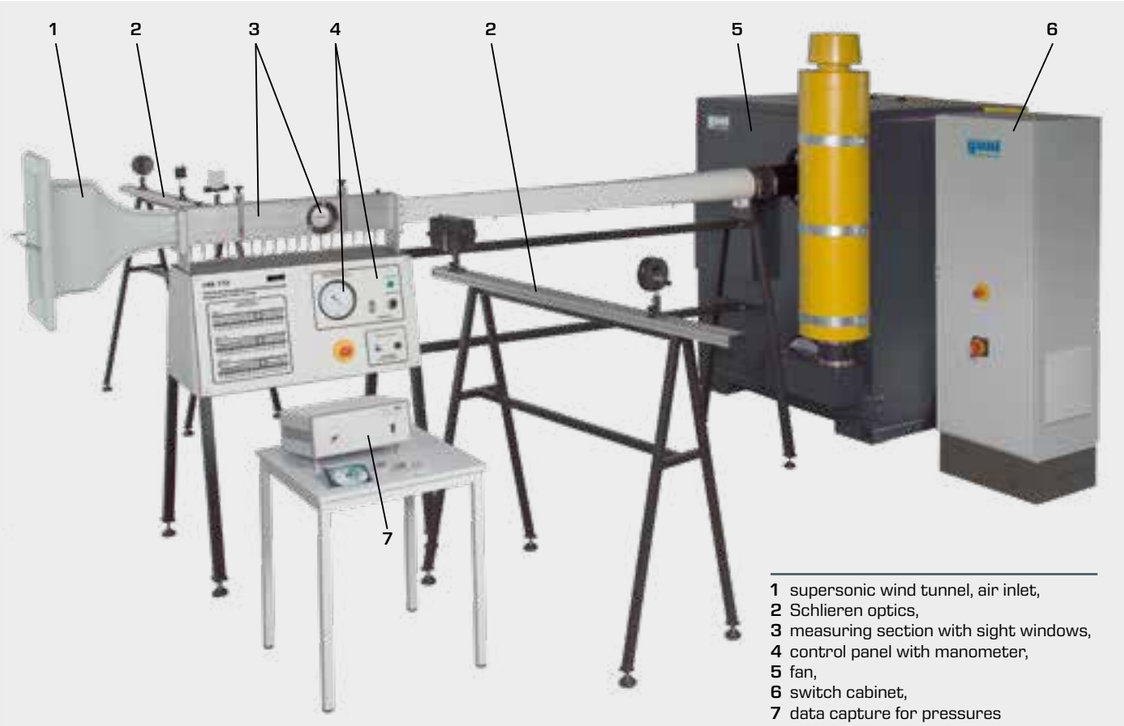


**1** supersonic wind tunnel, air inlet,
**2** Schlieren optics,
**3** measuring section with sight windows,
**4** control panel with manometer,
**5** fan,
**6** switch cabinet,
**7** data capture for pressures

## How the supersonic wind tunnel works

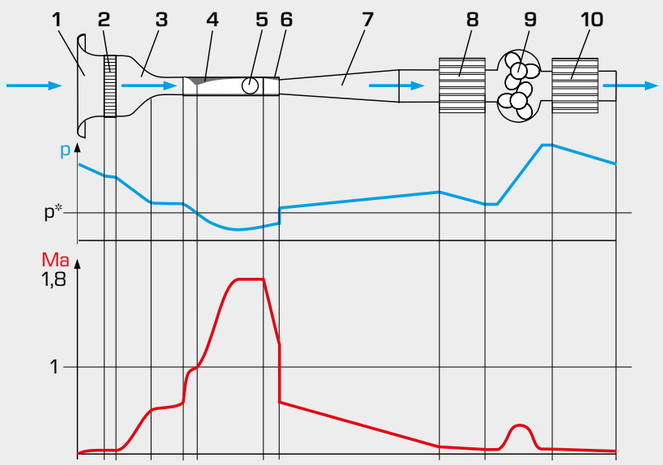


**p*** critical pressure ratio, **Ma** Mach number
pressure curve, velocity curve

The open supersonic wind tunnel operates continuously. A fan draws air in from the environment through the air inlet **1**, designed to be favourable to flow. The air drawn in flows through a flow straightener **2**, whereby transverse turbulence can be smoothed. The air is accelerated in the subsonic nozzle **3**. In the closed measuring section **4** an interchangeable wall with de Laval contour is used as supersonic nozzle in which air is accelerated to velocities up to Ma 1,8. The flow is observed using Schlieren optics through the sight window **5**, which is made of optical special-purpose glass. Supersonic and subsonic diffusers, **6**, **7** slow down the air flow in the rest of the supersonic wind tunnel. The air enters the fan **9** via the intake filter **8** and is compressed. The air is emitted back into the environment at the air outlet with sound damper **10**.

## Complete experimental set-up

- dimensions, set up: 6,1 x 4,5 m
- powerful fan allows continuous operation
- fan with effective soundproofing. Thus it is possible to set up in the laboratory.
- sight windows in the measuring section for using Schlieren optics to observe flow around bodies at supersonic speeds
- subsonic, transonic and supersonic flow up to Ma 1,8

## Interchangeable walls for generating velocities up to Mach 1,8 in the measuring section

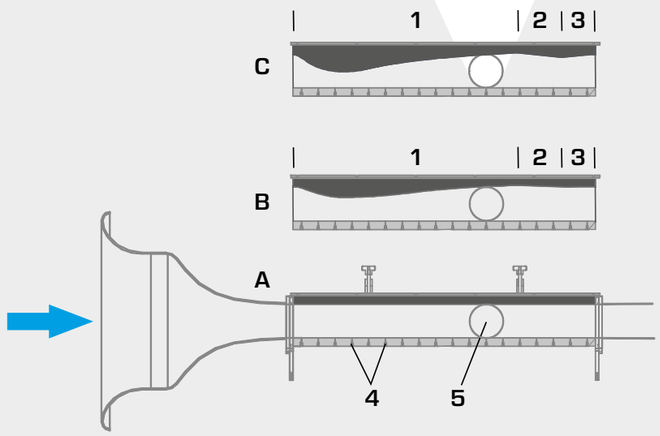


**A** straight contour: subsonic Ma < 1
**B** de Laval contour: supersonic Ma < 1,4
**C** de Laval contour: supersonic Ma 1,8

**1** supersonic nozzle,
**2** supersonic diffuser,
**3** subsonic diffuser,
**4** pressure measuring point,
**5** sight window

The closed measuring section with two opposite windows is a central component of the supersonic wind tunnel. Different drag bodies are inserted in the measuring section. The sight window on the operator side can be rotated and fitted with an angular scale, so that the drag body can be reproducibly aligned in the measuring section.

The pressure is recorded at 16 measuring points in the measuring section. The measuring points are evenly distributed over the length.

Interchangeable walls, inserted in the measuring section, are used to generate different velocities. The floor of the measuring section is flat, so that only the contour of the interchangeable wall determines the cross-section profile.

**A** straight contour for producing subsonic speeds. **B** and **C** de Laval contours are used as supersonic nozzles. The customised shape results in supersonic flow in the area of the sight window. Further down the measuring section, the interchangeable wall is designed as a supersonic diffuser, in which the flow is decelerated by an oblique and a normal shock wave in the subsonic range.

# HM 172
# Visualiation and pressure profile of supersonic flow

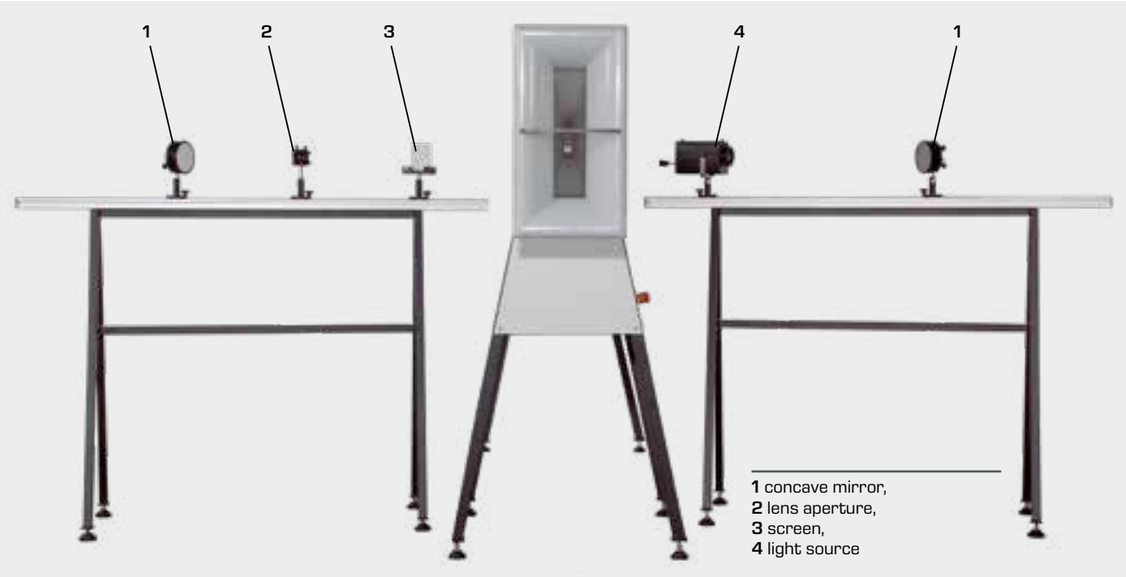


**1** concave mirror,
**2** lens aperture,
**3** screen,
**4** light source

## Layout and function of the Schlieren optics

Schlieren optics are used to visualise shock fronts and Mach lines that occur in shock waves.

Shock waves result in sudden increases in pressure and therefore changes in density. The Schlieren optics make the differences in density visible in the air.

To do so, a parallel light beam is sent through the measuring section, across the direction of flow. There are two sight windows in the measuring section for this purpose. Differences in density partially deflect the light due to the altered refractive index. After the light beam is focussed, deflected parts of the light beam are eliminated by a single-sided lens aperture. Thus transitions from light to dark are visible. Further down the path of the beam is a screen, onto which is projected an image of the density distribution in the measuring section – this is the Schlieren image.

The elements of the Schlieren optics are arranged on two optical benches on both sides of the measuring section. The set-up being separate from the wind tunnel prevents vibrations from transferring to the sensitive optics.

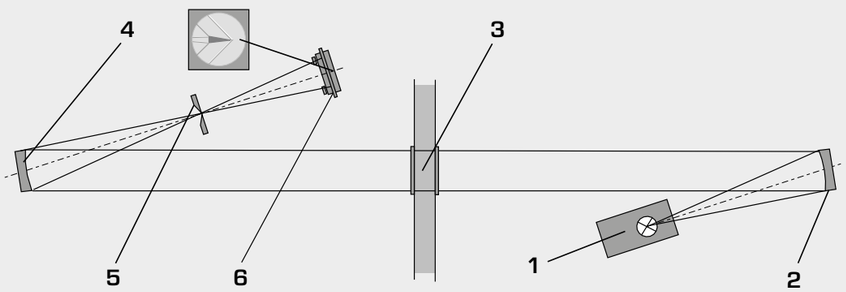


The Schlieren optics contain the following optical elements in the beam path:

**1** dot-shaped light source, **2** concave mirror parallelises the light beam,
**3** measuring section with two sight windows made of optical special-purpose glass, **4** concave mirror focuses the light beam,
**5** single-sided aperture filters out deflected parts of the beam, **6** screen displays the Schlieren image

## Interchangeable drag body

- angle of attack of the drag body can be adjusted
- the drag bodies **1** wedge and **2** double wedge represent supersonic aerofoils
- the drag bodies **3** rocket and **4** projectile are used to demonstrate a detached circular arc shaped shock wave

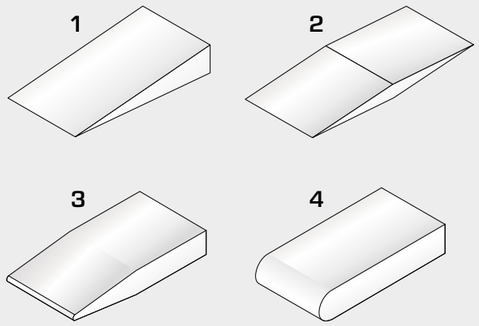


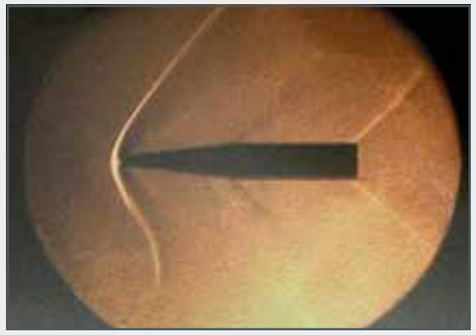

The shot of a Schlieren image shows a detached shock front on the rocket drag body typical of blunt bodies

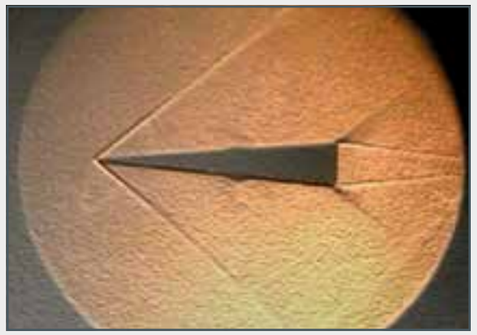

The shot of a Schlieren image shows an adjacent shock front on the wedge drag body typical of pointed bodies

## Software for data acquisition

- GUNT software included
- graphical representation of the pressure curves
- evaluation of measurement data in a spreadsheet programme (MS Excel, OO Calc)
- transfer of measurement data to a PC via USB interface

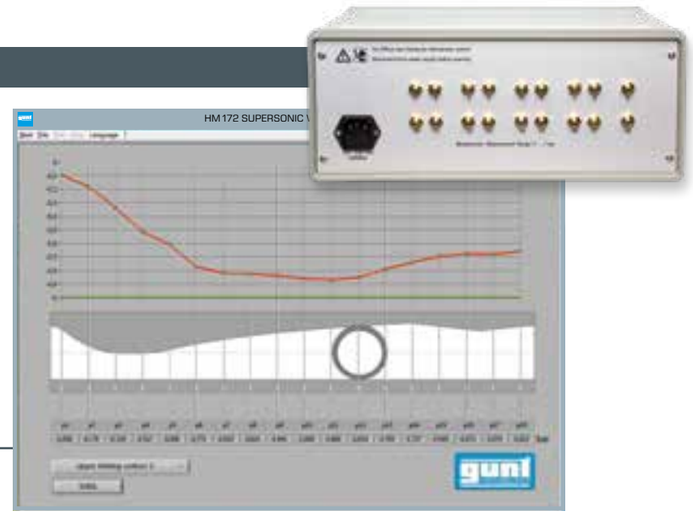


The display shows the pressures and positions of individual pressure measuring points in the measuring section

# HM 172
## Supersonic wind tunnel with Schlieren optics

### Description

- **pressure curves and pressure losses at subsonic and supersonic flow**
- **interchangeable walls in the measuring section for velocities up to Mach 1,8**
- **schlieren optics for visualisation of Mach lines and shock waves on drag bodies**

Subsonic and supersonic flows behave differently. Thus for example, a contraction in cross-section of the flow at subsonic speed causes an increase in velocity, and at supersonic speed causes velocity to slow down. Understanding these fundamental phenomena of supersonic flows helps in the design of e.g. gas and steam turbines, jets or rockets.

HM 172 is an "Eiffel" type open wind tunnel used to study the aerodynamic properties of various drag bodies at subsonic or supersonic flow.

A fan draws in air from the environment through the supersonic wind tunnel. There is a subsonic nozzle located at the air inlet, in which the intake air accelerates. The carefully designed contour of the subsonic nozzle with integrated flow straightener ensures a uniform velocity distribution with little turbulence in the subsequent measuring section. In the closed measuring section, the air is accelerated further and flows around a drag body (rocket, projectile, double wedge and wedge). Further down the supersonic wind tunnel, the air flow in slowed down in supersonic and subsonic diffusers and comes through a suction filter into the fan. Here, the air is compressed and then emitted back into the environment. A sound damper at the air outlet limits the sound level.

Interchangeable walls with different contours are used in the measuring section to generate flow velocities up to Mach 1,8.

The Schlieren optics supplied allow direct observation of the supersonic flow and the resulting shock fronts. Pressures are detected with sensors, transmitted directly to a PC via USB and analysed there using the software supplied. Additionally, the pressure is displayed on a manometer at the measuring point. The continuous method of operation means there is enough time available for observation and taking measurements.

### Learning objectives/experiments

- pressure curves in supersonic nozzles (Laval nozzle)
- pressure curves and losses in tunnel flows with Mach > 1
- observe shock waves in drag bodies using Schlieren optics
- determining the Mach number from the angle of the shock waves
- comparison of theory and experiment



# HM 172
## Supersonic wind tunnel with Schlieren optics

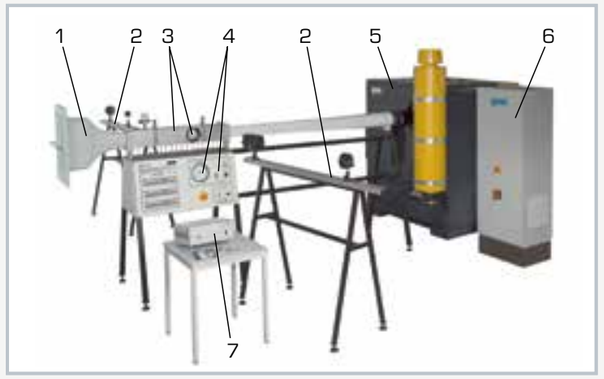


1 supersonic wind tunnel, air inlet, 2 Schlieren optics (two piece), 3 measuring section with two sight windows, 4 control panel with manometer, 5 fan, 6 switch cabinet, 7 data acquisition for pressure

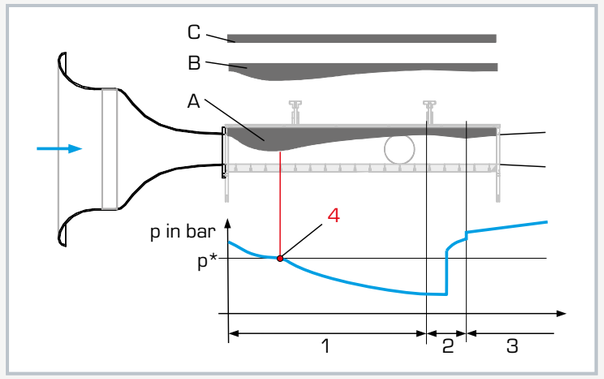


Measuring section with interchangeable walls: A Laval contour: Ma 1,8, B Laval contour: Ma 1,4, C straight contour: Ma less than 1
1 supersonic nozzle, 2 supersonic diffuser, 3 subsonic diffuser, 4 narrowest point in the nozzle; p* critical pressure ratio, blue pressure curve in the measuring section

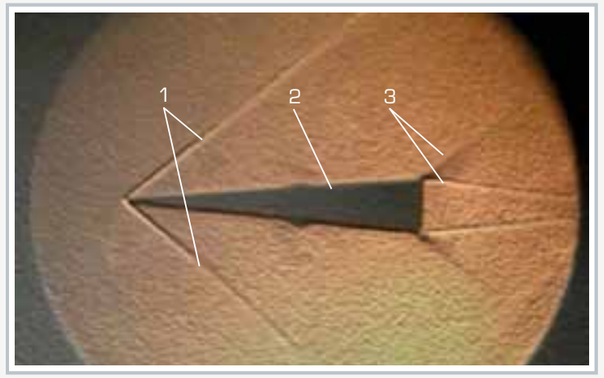


Shot of a Schlieren image: 1 mach lines form a cone-shaped shock front (Mach cone), 2 wedge drag body, 3 shock fronts at the end of wedge

### Specification

[1] investigation of pressure curves in supersonic flow
[2] visualisation of Mach lines and shock waves using Schlieren optics
[3] continuously operating, open supersonic wind tunnel, low pressure principle
[4] positive displacement fan with variable speed
[5] interchangeable walls in the measuring section produce velocities up to Mach 1,8
[6] drag bodies: rocket, projectile, double wedge and wedge
[7] manometer for displaying the pressure in the measurement point
[8] GUNT software for data acquisition via USB under Windows 7, 8.1, 10

### Technical data

Positive displacement fan, variable speed
- sound-dampened, max. 84dB(A)
- power consumption: 55kW

Supersonic wind tunnel
- cross-section of the measuring section: 100x25mm
- interchangeable walls for measuring section
  - 1 x straight contour: Ma<1
  - 2 x Laval contours: Ma 1,4 and Ma 1,8

Schlieren optics
- halogen lamp with 50 and 100W
- 2 adjustable parabolic mirrors
- adjustable slit diaphragm
- screen for Schlieren optics

Drag bodies
- wedge, double wedge, projectile, rocket

Recommended ambient conditions:
40% rel. humidity at 25°C

400V, 50Hz, 3 phases
LxWxH: 3500x810x1720mm (wind tunnel)
LxWxH: 1420x1600x1750mm (fan)
LxWxH: 1710x580x1450mm (Schlieren optics)
Weight: approx. 1550kg (total)

### Required for operation

PC with Windows recommended

### Scope of delivery

1 supersonic wind tunnel
3 walls for measuring section
1 Schlieren optics (two piece)
4 drag bodies
1 CD with GUNT software + USB cable
1 fan
1 set of instructional material

# HM 260
## Characteristics of nozzles

### Learning objectives/experiments

- determining the critical pressure ratio
- demonstration of the "choking effect"
- determining flow velocity in the narrowest cross-section
- measurement of the reaction or action force of the flowing fluid
- determine nozzle efficiency by thrust

### Description

- **force effects in nozzle flow**
- **determining the nozzle efficiency**
- **four convergent-divergent nozzles with different area ratios, one convergent nozzle and one baffle plate**

Fluids are accelerated in nozzles, while the pressure decreases. When using compressible fluids (e.g. air) very high speeds can be achieved by this process, often in the supersonic range. Nozzles are used in steam turbines, in injector devices, in supersonic aircraft and rockets. The impact forces or thrust (action or reaction force) occurring in the fluid is referred to when designing the shape of nozzles.

HM 260 offers two experiment layouts for nozzles, in which either the occurring action force or reaction force of the fluid is considered. Characteristics such as flow velocity and nozzle efficiency are measured. In addition, the "choking effect" is demonstrated, where the mass flow stops increasing upon reaching the critical pressure ratio. Air is used as a compressible fluid.

In the first experiment layout to determine the reaction force, a nozzle is inserted into the force measuring device. The force measuring device consists of a bending beam, whose deformation is measured electronically. The air pressure upstream and downstream of the nozzle can be adjusted. Compressed air flows through the nozzle and the occurring reaction force (thrust) of the fluid is measured.

In the second experiment layout, the baffle plate is inserted into the force measuring device and the nozzle is positioned above the baffle plate. The position of the nozzle is adjustable, so that the distance between the nozzle and the baffle plate can be varied. The flow at the nozzle outlet impacts against the baffle plate and the action force (impact force) of the fluid is detected by the deformation of the bending beam.

Pressures and mass flow are also detected in addition to the force. The temperatures are also measured, in order to determine the mass flow precisely. Four convergent-divergent and one convergent nozzle as well as a baffle plate are available for experiments.



# HM 260
## Characteristics of nozzles

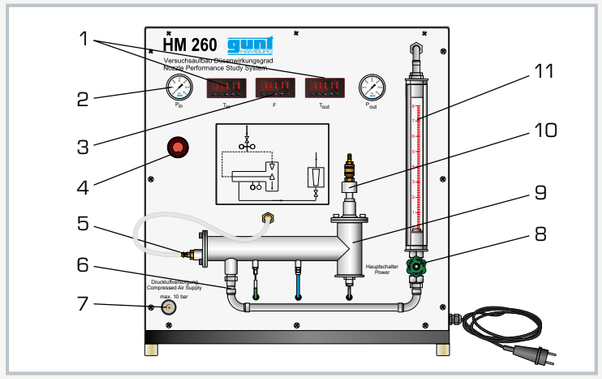


1 display for temperature, 2 display for pressure, 3 display for force, 4 pressure regulator, 5 air intake, 6 air outlet, 7 compressed air connection, 8 valve for adjusting the mass flow, 9 measuring section, 10 air intake, 11 rotameter

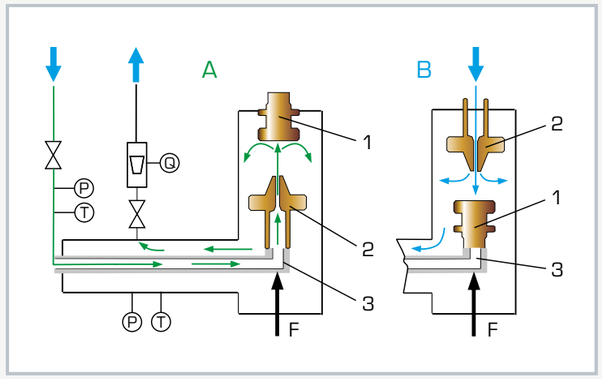


Experiment layout A measuring reaction force (thrust) and B measuring action force (impact force): 1 baffle plate, 2 nozzle, 3 force;
T temperature, P pressure, Q flow rate, F force

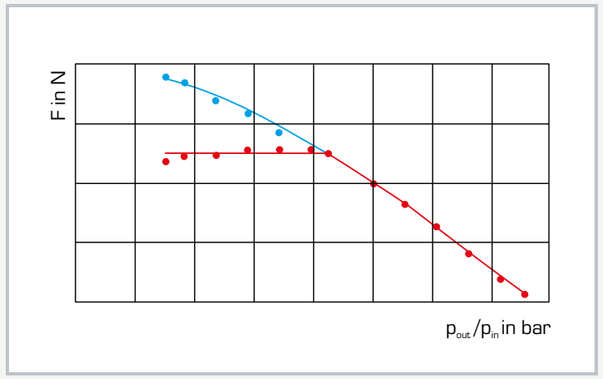


Reaction force (thrust) at the nozzle
blue overall thrust, red force from motive force (mass flow * velocity), $p_{out}/p_{in}$ critical pressure ratio, F force

### Specification

[1] detect impact force or thrust at nozzle to determine the flow velocity and nozzle efficiency
[2] experiment layout A: measuring reaction force (thrust) of the fluid at the nozzle
[3] experiment layout B: measuring action force of the fluid at the baffle plate
[4] air intake adaptable according to the experiment layout
[5] distance between baffle plate and nozzle can be adjusted
[6] compressed air regulator for adjusting the pressure downstream of the nozzle
[7] needle valve on the flow meter for adjusting the back pressure
[8] measuring reaction or action force of the nozzle by deformation of the bending beam
[9] 5 nozzles with different contours (4 convergent-divergent, 1 convergent) and 1 baffle plate
[10] instruments: manometer and digital temperature display upstream and downstream of the nozzle, as well as rotameter

### Technical data

Air consumption of the experimental unit
- compressed air: max. 10bar
- air consumption: approx. 5g/s

5 nozzles, brass
- 4x convergent-divergent
- 1x convergent
- diameter, all nozzles: 2mm
- length, divergent nozzles: 3,6 to 15,8mm

Compressed air regulator
- control range: 0...8,6bar

Measuring ranges
- temperature: 0...100°C
- pressure: 2x 0...10bar
- mass flow: 0,7...8,3g/s
- force: 0...2N

230V, 50Hz, 1 phase
230V, 60Hz, 1 phase; 120V, 60Hz, 1 phase
UL/CSA optional
LxWxH: 750x450x810mm
Weight: approx. 27kg

### Required for operation

compressed air: max. 10bar, 250NL/min

### Scope of delivery

1 experimental unit
5 nozzles
1 baffle plate
1 set of instructional material

# HM 261
## Nozzle pressure distribution

### Description

- **pressure distribution in convergent and divergent nozzles**
- **three nozzles with different contours**
- **speed of sound and shock wave**

Convergent nozzles are used in the subsonic range. Velocities in the supersonic range can be achieved in de Laval nozzles; their nozzle geometry is a combination of convergent and divergent contours. De Laval nozzles are used in supersonic wind tunnels, steam turbines, jet engines and rocket technology. Pressure curves are a good way of representing the different velocity ranges in the nozzle, such as subsonic, supersonic and shock wave.

The experimental unit HM 261 is used to measure pressure curves in convergent and convergent-divergent nozzles (de Laval nozzles) and to study the actual flow of compressible fluids. In addition, the "choking effect" is demonstrated, where the mass flow rate stops increasing upon reaching the critical pressure ratio. Air is used as a compressible fluid.

In the experiment, the air flows through a nozzle and is thus accelerated. The pressure curve is recorded in the direction of flow over several measuring points. The air pressure upstream and downstream of the nozzle can be adjusted.

Three interchangeable nozzles are available to study the pressure and velocity ratios: one convergent contour and two de Laval nozzles with different length nozzle extensions.

The measured values for temperatures, pressures and mass flow rate are recorded.

### Learning objectives/experiments

- pressure curve in
  - de Laval nozzles
  - convergent nozzles
- connection between inlet pressure and mass flow rate or exit pressure and mass flow rate
- how pressure drop in the nozzle affects the temperature
- determining the critical pressure ratio (Laval pressure ratio)
- demonstration of the "choking effect"
- proof of shock waves



# HM 261
## Nozzle pressure distribution

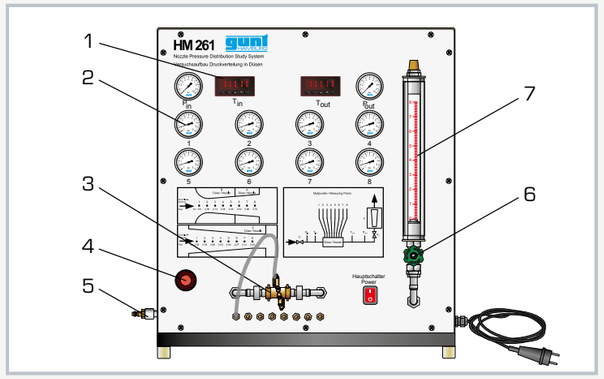


1 display for temperature, 2 display for pressure, 3 nozzle, 4 compressed air regulator, 5 air inlet, 6 valve for adjusting the mass flow rate, 7 rotameter

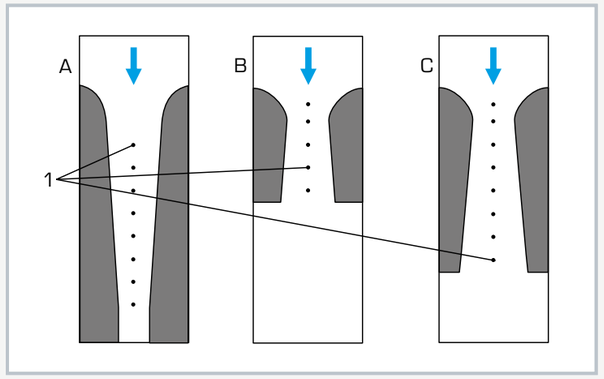


Nozzles with different contours: A convergent nozzle, B short de Laval nozzle, C long de Laval nozzle; 1 pressure measuring point, blue arrow: direction of the flow

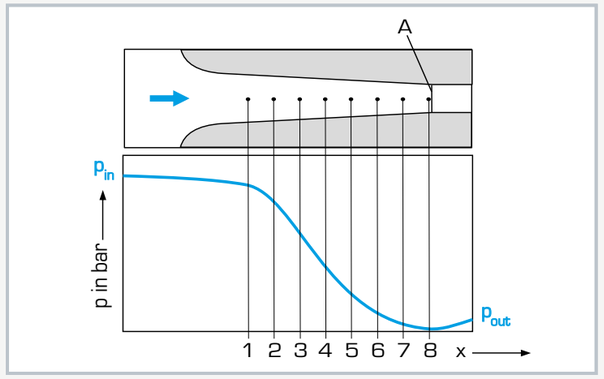


Pressure distribution in the convergent nozzle: A narrowest cross-section, x pressure measuring points, p pressure

### Specification

[1] nozzle pressure distribution in actual flow of compressible fluids
[2] three nozzles with pressure measurement points: 1 convergent nozzle, 1 short and 1 long de Laval nozzle
[3] compressed air regulator for adjusting the pressure downstream of the nozzle
[4] needle valve on the flow meter for adjusting the back pressure
[5] instruments: manometer and digital temperature display upstream and downstream of the nozzle as well as rotameter

### Technical data

Air consumption of the experimental unit
- compressed air: max. 10bar
- air consumption: approx. 5g/s

3 nozzles, brass
- 1 x de Laval nozzle, short nozzle extension
- 1 x de Laval nozzle, long nozzle extension
- 1 x convergent nozzle

Compressed air regulator
- control range: 0...8,6bar

Measuring ranges
- temperature: 0...100°C
- pressure: 2x 0...10bar, 8x 1...9bar
- mass flow: 0,7...8,3g/s

230V, 50Hz, 1 phase
230V, 60Hz, 1 phase; 120V, 60Hz, 1 phase
UL/CSA optional
LxWxH: 750x450x830mm
Weight: approx. 41kg

### Required for operation

Compressed air connection max. 10bar, 250NL/min

### Scope of delivery

1 experimental unit
3 nozzles
1 set of instructional material

Basic knowledge

# Flow in pipes and valves and fittings

Pipe systems are generally used to transport fluids. When flowing through a pipe the friction causes the pressure energy of the fluid to fall and the internal energy of the fluid to increase. The decrease in internal energy is generally referred to as flow loss, which manifests itself as pressure loss in the fluid.

In case losses occur a distinction is made between the internal friction in the fluid and the friction between the fluid and the wall or resistance.

The following general concepts of fluid mechanics are discussed in connection with the losses:

- laminar and turbulent flow
- pipe friction due to different materials and surfaces
- pressure losses in pipes and pipe fittings
- pressure loss in valves and fittings

## Laminar and turbulent flow in pipes

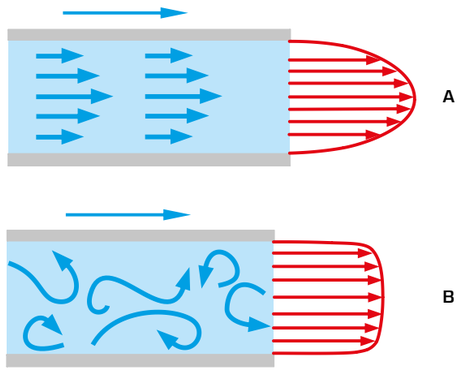


In the case of a laminar flow **A** in pipes, fluid particles move in parallel in layers without mixing with each other. The velocity distribution of the fluid in the pipe is non-uniform. The fluid is decelerated in the boundary zone due to the pipe friction and moves more slowly than in the centre of the pipe. The pressure loss is proportional to the mean fluid velocity. In practice, a fully developed laminar flow is rare.

In the case of turbulent flow **B** the individual fluid layers swirl and exchange energy. The resulting flow field is characterised by three-dimensional, unpredictable and transient movements of the fluid particles. In some cases a laminar boundary layer remains in the boundary zone of the pipe. The velocity distribution is nearly constant over a wide range of the pipe cross-section. In contrast to laminar flow, the pressure loss is proportional to the square of the mean fluid velocity.

In flow through pipes the Reynolds number **Re** can be calculated from the inner diameter of the pipe **d**, the mean fluid velocity **v** and the kinematic viscosity **ν**.

$$Re = \frac{v \cdot d}{\nu}$$

turbulent flow Re ≥ 2300

The distinction between laminar and turbulent flow can be determined using the Reynolds number Re. The Reynolds number is a dimensionless figure. A Reynolds number up to approximately 2300 refers to laminar flow. Above a Reynolds number of 2300 the flow is known as turbulent flow. Flows with the same Reynolds number are comparable in their behaviour.

## Pipe friction on various materials and surfaces

In practice, the surfaces of pipe walls are always associated with a certain roughness. This surface roughness is created partly as a result of the production process and partly due to deposits or corrosion caused by operation. The pipe's material also has a decisive influence on the roughness.

In laminar flow the roughness of the pipe has a very small influence on the pressure loss, because the fluids in the region of the boundary layer have very low flow velocities or in some cases do not move at all.

In turbulent flow, however, what is decisive is whether the thickness **δ** of the laminar boundary layer extends over the unevenness of the pipe surface **k** and conceals it. In this case they are referred to as **hydraulically smooth pipes** and the roughness does not affect the pressure loss. If the surface roughness of the pipe extends far beyond the laminar boundary layer, the sliding effect of the boundary layer is lost. In this case they are **hydraulically rough pipes** and the roughness has a considerable effect on the pressure loss.

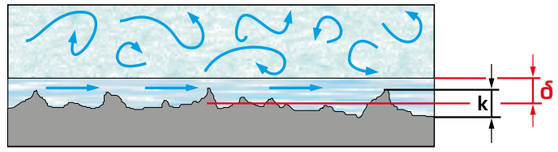


**δ** thickness of the laminar boundary layer
**k** height of the unevenness

### Hydraulically smooth pipes

The laminar boundary layer is sufficiently pronounced to cover the unevenness in the pipe surface. The turbulent pipe flow can flow freely.

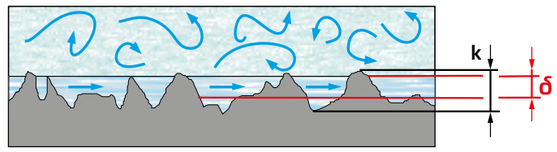


**δ** thickness of the laminar boundary layer
**k** height of the unevenness

### Pipes in the transition region

In practice, hybrid forms occur depending on the flow condition and the nature of the pipe. If the laminar boundary layer is considerably pronounced but does not entirely cover the unevenness, this is referred to as pipes in the transition region.

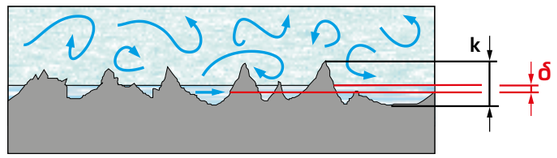


**δ** thickness of the laminar boundary layer
**k** height of the unevenness

### Hydraulically rough pipes

The laminar boundary layer is not sufficiently pronounced to cover the unevenness in the pipe surface.

Basic knowledge

# Flow in pipes and valves and fittings

## Pressure loss in pipes, pipe fittings and valves

### Pressure loss in the straight pipe element

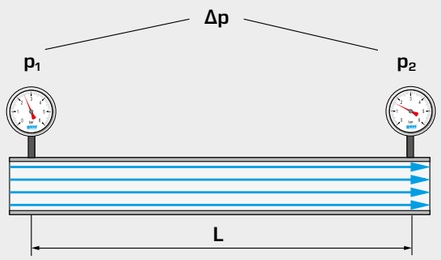


**p** pressure, **Δp** pressure difference, **L** pipe length

### Pressure loss in the pipe bend

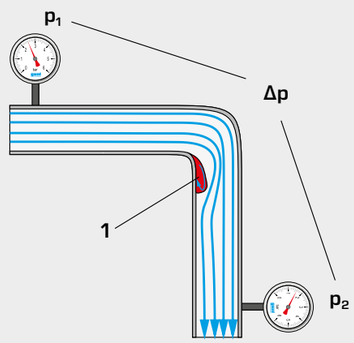


**p** pressure, **Δp** pressure difference, **1** secondary flow

### Pressure loss in an enlargement

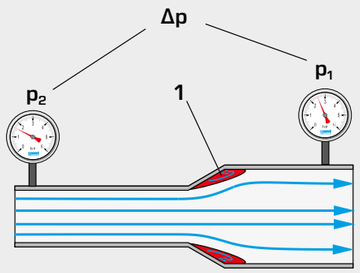


**p** pressure, **Δp** pressure difference, **1** flow separation

Pipe systems are composed of various pipe elements, each with specific properties. When determining pressure losses a distinction is made between pure friction losses in straight pipe elements and the additional losses in pipe fittings and other components such as valves. Unlike in straight pipe elements, further losses occur in pipe fittings due to flow separation or secondary flow, in addition to the friction losses caused by the surface roughness.

The pressure loss in a pipe fitting depends on the type of deflection and is referred to as resistance coefficient **ζ**. Resistance coefficients are determined by experiment via a pressure measurement of inlet $p_1$ to outlet $p_2$ of the pipe fitting and are given as guide values in tables. The resistance coefficient indicates that pressure difference there has to be between the inlet and outlet in order to maintain a certain flow rate through a pipe element.

### Pressure difference in straight pipe elements

The pressure difference **Δp** from inlet to outlet of a straight pipe element results from the friction factor **λ**, the pipe length **L**, the density of the fluid **ϱ** and the square of the mean fluid velocity **v** divided by the pipe inner diameter $d_i$.

$$\Delta p = \frac{\lambda \cdot L \cdot \varrho \cdot v^2}{d_i \cdot 2}$$

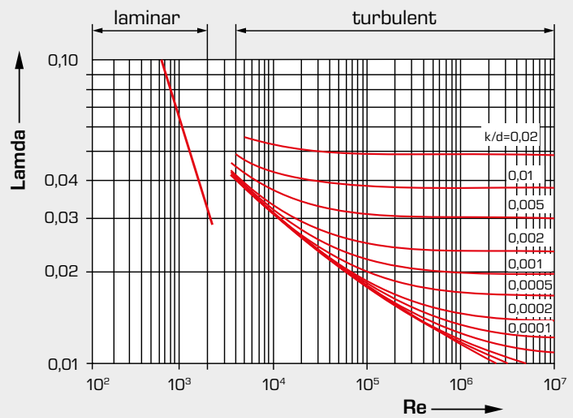


The pipe friction chart shows the dependence of the friction factor **λ** on the Reynolds number **Re** and the roughness **k**

### Pressure differential in pipe fittings

The pressure differential **Δp** between inlet and outlet of a pipe fitting is determined by the resistance coefficient **ζ**, the density of the fluid **ϱ** and the square of the mean fluid velocity **v**.

$$\Delta p = \zeta \cdot \frac{1}{2} \cdot \varrho \cdot v^2$$

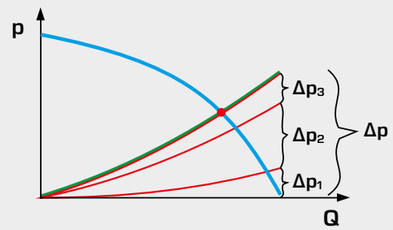


individual resistances $\Delta p_{1\text{-}3}$ of a system,
total resistance **Δp** of the system,
pump characteristic;
**Δp** pressure differential, **p** pressure, **Q** flow

Adding all the pressure losses in the various pipe elements gives the system characteristic of the pipe system. The necessary pump head as a function of the flow rate results from the system characteristic.

## Pressure losses in shut-off valves and fittings

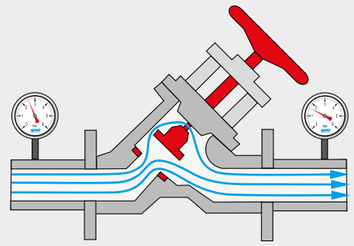

Shut-off valves and fittings are used as components for shutting off the flow in pipe systems. The main types of shut-off valves and fittings include valves, taps and gate valves. The closing mechanism is implemented in different ways depending on the design of the valve. When flow passes through the various valves, different pressure losses occur depending on the geometry and open condition of the valve.

Pressure losses occur even in the fully open state, as a result of the often sharp deflection of the flow within the valve. The pressure difference in this case can be expressed by the resistance coefficient **ζ** for the open state.

## Pressure losses in control valves and fittings

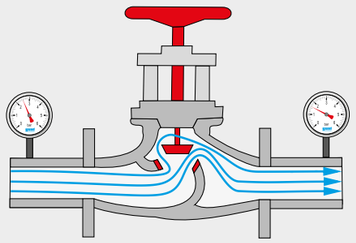

The flow through a flow control valve can be adjusted thanks to the design of the valve. The flow rate at the respective open state is characterised by the valve characteristic.

When selecting valves, the flow coefficient $K_{vs}$ at 100% open provided by the valve manufacturer is given. This flow coefficient is a measure of the maximum possible throughput of a fluid through a valve. For valve openings smaller than 100% the flow coefficient is called $K_v$. The flow coefficient $K_v$ is between 0 and the $K_{vs}$.

The flow coefficient $K_v$ for valves is determined for different opening states via the flow rate **Q** and the pressure difference **Δp** between inlet and outlet of the valve.

$$K_v = Q \cdot \sqrt{\frac{1\text{bar}}{\Delta p}}$$

# HM 120
## Losses in pipe elements

### Description

- **investigation of the pressure losses in pipe elements**
- **comparison of losses in similar components**
- **different types of pressure measurement**

In pipes through which water flows, the pipe friction and various deflections cause pressure losses that manifest themselves as pressure losses.

HM 120 allows the investigation by experimentation of pressure losses in pipes and different pipe elements.

The trainer includes ten pipe sections with different pipe elements. Four of the pipe sections are straight and designed with a constant cross-sectional area; they differ from each other in material and cross-section. One of the pipe sections includes three different types of flow diversion: pipe bend, pipe angle and segment bend. Two other pipe sections include various shut-off valves and fittings with different resistances. The opening characteristics of the valves and fittings are determined in the experiment. Two other pipe sections contain gradual and sudden contractions and enlargements. The last pipe section is designed as a parallel, dual line.

A water supply and drain are required for operation. If the trainer is to be operated as a closed circuit without connection to the mains water network, this can be done with the optional HM 130.01 unit.

The pressure measuring points in the pipe system are designed as annular chambers and are located directly upstream and downstream of the pipe elements, ensuring a precise pressure measurement. The sensors are connected in pairs to a differential pressure meter, a manometer panel or twin tube manometers where the respective differential pressure can be read. The flow is displayed on a rotameter.

### Learning objectives/experiments

- different methods of differential pressure measurements
- influence of pipe diameters, different materials and surface roughness
- effect of the flow velocity
- pressure loss in pipe bends, pipe angles and segment bends
- pressure losses in cross-section changes
- determination of resistance coefficients
- valve characteristics of various valves and fittings
- comparison between experiment and calculation



# HM 120
## Losses in pipe elements

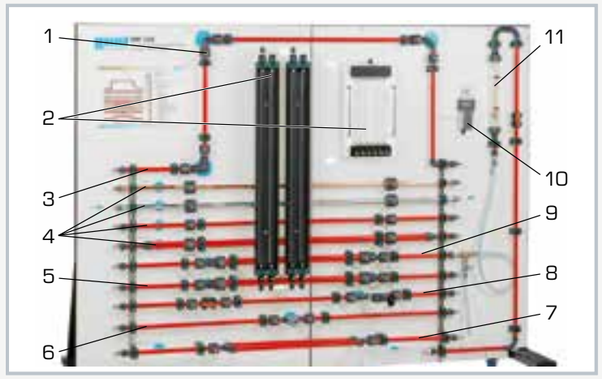


1 pressure measuring point, 2 tube manometer, 3 pipe section with deflections, 4 straight pipe sections, 5 sudden contraction/enlargement, 6 gate valve, 7 dual line, 8 ball valve/angle seat valve, 9 gradual contraction/enlargement, 10 differential pressure meter, 11 flow meter

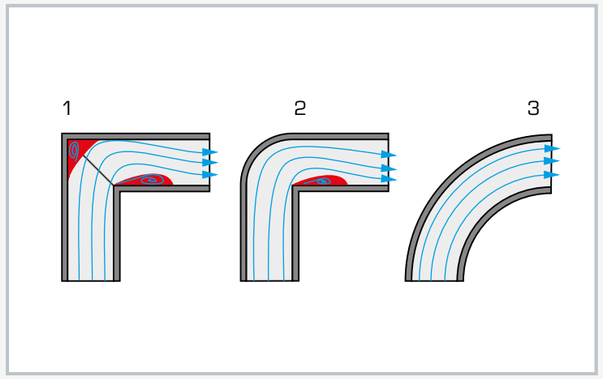


Schematic representation of the flow through different fittings 1 segment bend, 2 pipe angle, 3 pipe bend; red area of vortex formation

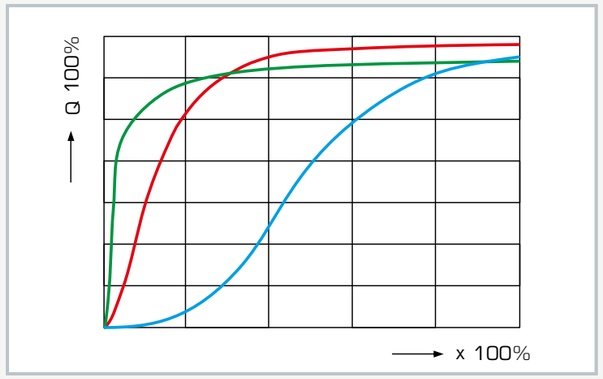


Qualitative valve characteristic of the shut-off valves and fittings: green: angle seat valve, red: gate valve, blue: ball valve; Q flow, x opening state

### Specification

[1] investigation of the pressure losses in pipe elements
[2] ten different pipe sections
[3] measurement of pressure losses in valves, changes in pipe direction, straight pipes, contraction/enlargement or parallel lines
[4] selection of pipe sections via hose connections with quick-release coupling
[5] operation via mains water network or in a closed circuit with HM 130.01
[6] flow measurement with rotameter
[7] pressure sensor in annular chambers
[8] differential pressure measurement with differential pressure meter or twin tube manometers or 6 tube manometers

### Technical data

Pipe sections, length: 1000mm
- straight, Cu, diameter: 18x1mm,
- straight, galvanised steel, diameter: ½"
- straight, PVC, diameter: 20x1,5mm,
- straight, PVC, diameter: 32x1,5mm
- section with segment bend, pipe angle, pipe bend
- gradual/sudden enlargement in diameter: from 20 to 32mm
- gradual/sudden contraction in diameter: from 32 to 20mm
- dual line, PVC, diameter: 20x1,5mm

Measuring ranges
- flow rate: 0...1600L/h
- differential pressure:
  - differential pressure meter: 0...2000mbar
  - twin tube manometer: 1000mmWC
  - 6 tube manometers: 340mmWC

LxWxH: 2250x760x1800mm
Weight: approx. 127kg

### Required for operation

water connection, drain

### Scope of delivery

1 trainer
1 differential pressure meter
1 set of hoses
1 set of instructional material

# HM 112
## Fluid mechanics trainer

## Description

- **extensive possibilities for basic experiments in fluid mechanics**
- **different pipe sections with various pipe elements**
- **GUNT software for data acquisition**

The knowledge of flow in pipe systems has a wide range of practical applications in many fields. When water flows through a pipe system the internal friction and the pipe friction cause pressure losses. The pressure losses in the fluid are directly dependent on the resistances and the flow velocity.

The HM 112 trainer allows a variety of experiments for flow and pressure measurement and the determination of pressure losses and pressure curves in different pipe elements. The measured values are analysed using the GUNT software supplied. Characteristics can easily be recorded and analysed directly on a PC.

The trainer contains six different, horizontally arranged pipe sections, which allow the effects of pipe material, diameter and changes in cross-sectional and direction on the pressure loss to be studied. Measuring objects such as valves, strainers, a Venturi nozzle, a Pitot tube or orifice plate flow meter or measuring nozzle can be used in another pipe section. To make the functions clearly visible, some of the measuring objects are transparent. Additional measuring objects are available as a set (HM 110.01) to expand the scope of experiments.

The trainer can be operated independently from the mains water network and is equipped with a pump and a water tank. The trainer includes a rotameter to determine the flow rate. Pressure measuring points are located immediately upstream and downstream of the measuring objects. These are designed as annular chambers, ensuring a precise pressure measurement. Five different pressure gauges with analogue or digital displays are provided for pressure measurement.

Depending on the measurement method, the measured values can be read off the analogue manometer or digital displays. The measured values are transmitted directly to a PC via USB. The data acquisition software is included.

## Learning objectives/experiments

- flow and pressure measurement methods
- function of nozzle, orifice, Venturi nozzle
- losses due to pipe bends and pipe angles, changes in cross-section and shut-off valves and fittings
- determining pipe friction factors and resistance coefficients
- opening characteristics in shut-off valves and fittings



# HM 112
## Fluid mechanics trainer

1 thermometer, 2 twin tube manometer, 3 rotameter, 4 different pipe sections, 5 pump, 6 storage tank, 7 pressure sensor, 8 differential pressure meter, 9 digital pressure indicators, 10 6 tube manometers

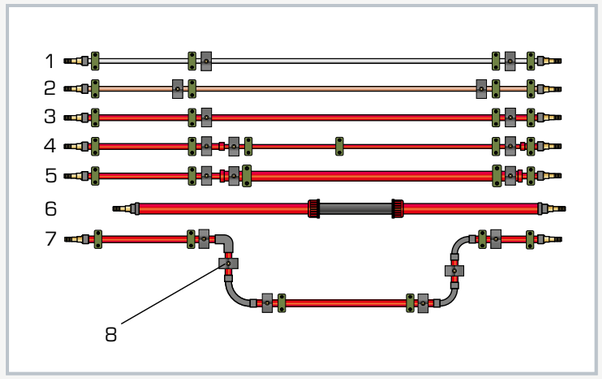


Representation of the pipe sections: 1 steel pipe, 2 copper pipe, 3 PVC pipe, 4 contraction in cross-section, 5 enlargement in cross-section, 6 measuring section for holding measuring objects, 7 pipe bends and pipe angles, 8 measuring point with annular chamber

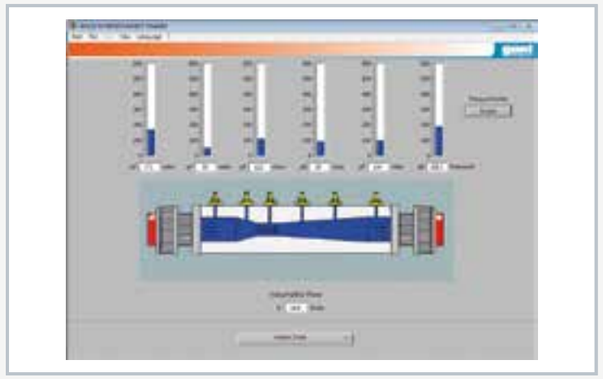

Software screenshot: pressure and velocity curve in a Venturi nozzle

## Specification

[1] trainer for fluid mechanics experiments
[2] interchangeable measuring objects, partly transparent: angle seat valve, diaphragm valve, ball valve, non-return valve, strainer, Pitot tube, Venturi nozzle, orifice plate flow meter and measuring nozzle
[3] different pipe sections
[4] precise pressure measurement using annular chambers
[5] differential pressure measurement using tube manometers
[6] flow rate measurement using rotameter
[7] digital displays for pressure and differential pressure
[8] GUNT software for data acquisition via USB under Windows 7, 8.1, 10
[9] additional set of measuring objects HM 110.01 available

## Technical data

Pump
- power consumption: 0,37kW
- max. flow rate: 4,5m$^3$/h
- max. head: 28,5m

Storage tank: 55L
Pipe section for interchangeable measuring objects
- 32x1,8mm, PVC

3 straight pipe sections, length: 1000mm
- ½", St, galvanised
- 18x1mm, Cu
- 20x1,5mm, PVC

Pipe section, PVC
- gradual contraction, Ø: 20x1,5...16x1,2mm
- gradual enlargement, Ø: 20x1,5...32x1,8mm
- with 90° pipe angle/ pipe bend, Ø: 20x1,5mm

Tube manometer: 2x 2 tubes, 1x 6 tubes

Measuring ranges
- differential pressure: 1x 0...200mbar
- pressure:
  - 6x 0...390mmWC
  - 4x 0...600mmWC
- flow rate: 1x 0,2...2,5m$^3$/h
- temperature: 1x 0...60°C

230V, 50Hz, 1 phase
230V, 60Hz, 1 phase; 120V, 60Hz, 1 phase
UL/CSA optional
LxWxH: 2220x820x1980mm
Weight: approx. 250kg

## Required for operation

PC with Windows recommended

## Scope of delivery

1 trainer
1 set of measuring objects
1 set of accessories
1 GUNT software CD + USB cable
1 set of instructional material

# HM 110.01
## Set of measuring objects, brass

### Learning objectives/experiments

- determination of the opening characteristic of different valves and fittings
- determination the pressure loss at various valves

### Specification

[1] commercial brass valves and fittings
[2] valves and fittings fitted with screw fittings are inserted in the measuring section without any tools
[3] precise differential pressure measurement via annular chambers

### Technical data

- non-return valve, straight
- angle seat valve
- shut-off valve, straight
- gate valve
- strainer

L: max. 330mm per measuring object (with screw)
Weight: approx. 1,5kg

### Scope of delivery

1 set of measuring objects

### Description

- **commercial valves and fittings from industry**
- **precise pressure measurement via annular chambers**

Shut-off valves and fittings are used in practice to control material flow in pipes. Depending on the opening state of the respective shut-off valve, there is a pressure loss in the fluid due to the deflection of the flow. This pressure loss depends on the geometry and operating principle of the respective valve and determines their field of application. Some valves and fittings are suitable for setting different flow rates because of their uniform pressure loss at different opening states. Other valves and fittings produce high resistances and are suitable only to completely shut or open pipes.

HM 110.01 includes commercial valves and fittings from industry for use in the HM 112 trainer. The set includes a non-return valve, a gate valve, an angle seat valve, a shut-off valve and a strainer.

Pressure measuring points are located immediately upstream and downstream of the pipe elements. These are designed as annular chambers, ensuring a precise pressure measurement. The individual valves and fittings can be inserted into the measuring section of the trainer HM 112 without the use of tools.

# First-rate handbooks

**GUNT's policy is simple: high quality hardware and clearly developed accompanying instructional material ensure successful teaching and learning about an experimental unit.**

The core of the accompanying material are detailed reference experiments that we have carried out. The description of the experiment contains the actual experimental setup right through to the interpretation of the results and findings. A group of experienced engineers develops and maintains the instructional material. Nevertheless, we are here to help should any questions remain unanswered, either by phone or – if necessary – on site.

# HM 122
## Pressure losses in pipes

### Description

- **resistances and losses in turbulent pipe flow**
- **closed water circuit with tank and pump**
- **ideal measurement results through long measuring section with several pressure measuring points**
- **precise pressure measurement via annular chambers**

Knowledge of pressure losses in various pipe elements is a key factor in designing pipe systems. The HM 122 trainer allows the determination by experiment of these important coefficients and the investigation of the pressure curve in typical pipe sections.

The trainer comprises three straight pipe sections made of different materials and with different diameters. Also included are: a pipe section with pipe bends, a pipe section with contraction and enlargement and a pipe section with interchangeable valves and fittings.

The large length of the pipe sections of 2,5m and the fact each section is fitted with at least five pressure measuring points means it is possible to obtain very accurate measurements and demonstrate the linear reduction in pressure in a pipe.

A rotameter and a volumetric measuring tank are included for comparison measurements and calibrations. The volumetric measurement using a stopwatch gives highly accurate results even at low flow rates. Tube manometers, a Bourdon tube pressure gauge and a differential pressure sensor are provided for pressure and differential pressure measurements.

The pressure measuring points are designed as annular chambers for accurate pressure measurement. A movable manometer panel saves space and allows for optimal accessibility. The trainer includes
a closed water circuit with tank and submersible pump. This means the trainer can be used independent of the laboratory network.

### Learning objectives/experiments

- fundamentals of flow measurement
- fundamentals of pressure measurement
- determination of the friction factor for different pipe materials and diameters
- resistance coefficients of pipe bends, enlargements and contractions
- pressure losses and opening characteristics of valves and fittings



HM 122
Pressure losses in pipes

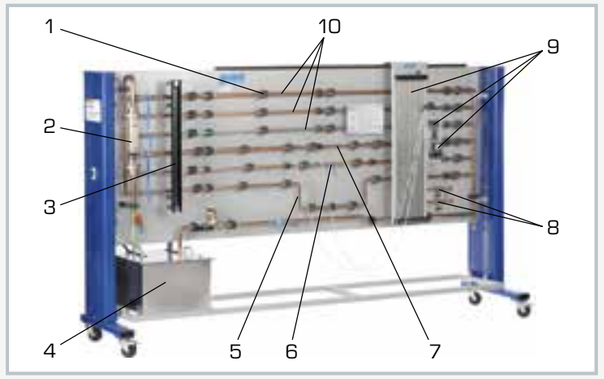


1 annular chamber for pressure measurement, 2 rotameter, 3 measuring tank level indicator, 4 tank with submersible pump, 5 pipe section with pipe bends, 6 pipe section with interchangeable valves and fittings, 7 pipe section with contraction and enlargement, 8 interchangeable valves and fittings, 9 movable panel with Bourdon tube pressure gauge, differential pressure sensor and tube manometer, 10 long pipe section

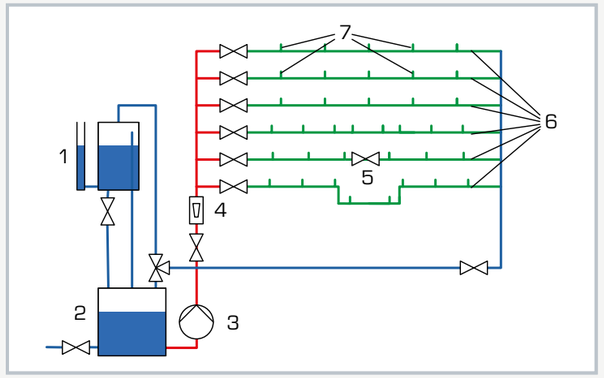


1 volumetric measuring tank, 2 supply tank, 3 submersible pump, 4 rotameter, 5 interchangeable valves and fittings, 6 different pipe sections, 7 pressure measuring points

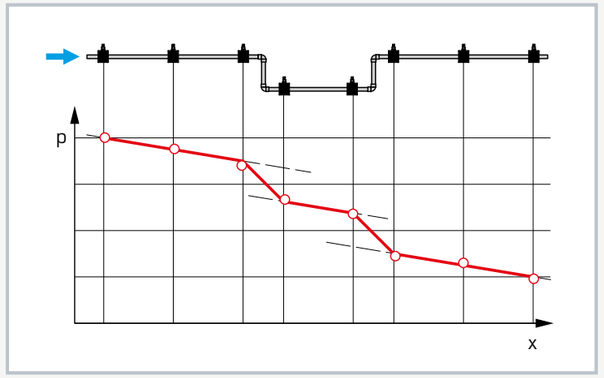


Pressure curve in the pipe section with 4 pipe bends (top); x position in the pipe section, p water pressure

### Specification

[1] investigation of pressure losses
[2] three long pipe sections made of copper and steel with different diameters
[3] pipe section with pipe bends
[4] pipe section with sudden contraction and enlargement
[5] pipe section with interchangeable fittings with different opening characteristics: needle valve, shut-off valve, ball valve
[6] determination of the pressure curve along the measuring section with up to 8 pressure measuring points
[7] easy pressure measurement via annular chambers
[8] pressure and differential pressure measurement with 8 tube manometers, Bourdon tube pressure gauge and electronic differential pressure sensor
[9] flow measurement via rotameter and volumetric measuring tank
[10] closed water circuit with tank and submersible pump
[11] stainless steel tank

### Technical data

Pump
- power consumption: 0,45kW
- max. flow rate: 4,8m$^3$/h
- max. head: 22,6m

3 straight pipe sections, measuring length: 2,5m
- copper, diameter: 28x1mm, 22x1mm
- steel, diameter: 1/2"

Pipe section with pipe bend
- copper, diameter: 22x1mm

Pipe section with contraction/enlargement
- copper
- contraction, diameter: 18x1mm
- enlargement, diameter: 28x1mm

Pipe section with valves and fittings
- copper, diameter: 18x1mm

Volumetric measuring tank: 20L
Tank for water: 110L

Measuring ranges
- pressure: -1...1,5bar
- differential pressure: 1x 0...+/-350mbar, 8x 0...1000mmWS
- flow rate: 1x 400...4000L/h

230V, 50Hz, 1 phase
230V, 60Hz, 1 phase; 120V, 60Hz, 1 phase
UL/CSA optional
LxWxH: 3260x790x1930mm
Weight: approx. 325kg

### Scope of delivery

1 trainer
1 set of instructional material

# HM 111
## Pipe networks

### Description

- **structure of various pipe networks**
- **pressure losses at various piping elements and pipe networks**
- **closed water circuit with tank and pump**

An important task in the construction of pipelines is to determine the pressure and flow rate in complex piping systems. In practice, the calculation of the total pressure losses serves as a foundation for the design of suitable drive units for heating and air conditioning systems, drinking water supply systems and parts of wastewater systems. Knowledge of pressure losses is also used to optimise operation.

HM 111 enables the construction and investigation of various pipe networks, such as parallel and series connections of pipes, their branching and merging, and the study of individual pipes. In analogy to Kirchhoff's laws of electricity, it is possible to conduct nodal analysis.

The five pre-installed pipe sections on the top of the trainer are connected to pipe networks using the piping elements. Tank, pipes, piping elements and valves and fittings are made entirely of plastic. The individual pipe sections are shut off by ball valves. During the experiments, the pressure losses in various pipes and piping elements are recorded and evaluated.

Two manometers for different measuring ranges are included to measure differential pressure. The flow rate is measured volumetrically.

The trainer has its own water supply. The closed water circuit includes a supply tank with submersible pump.

### Learning objectives/experiments

- recording the calibration curve for pipe sections: pressure loss over flow rate
- pipe sections connected in parallel
- pipe sections connected in series
- combined series and parallel connection
- investigation of a closed circular pipeline
- differential pressure measurement
- pressure losses at various piping elements



HM 111
Pipe networks

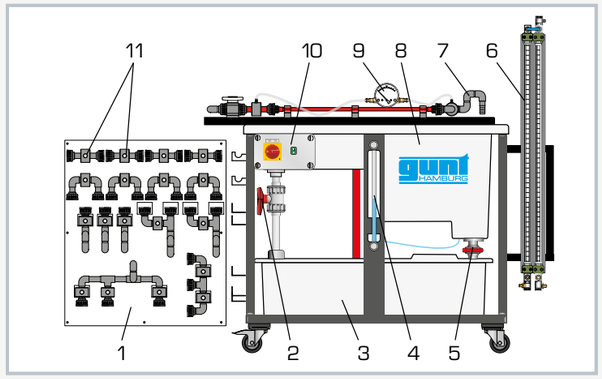


1 panel with piping elements, 2 valve for adjusting the flow rate, 3 supply tank with submersible pump, 4 measuring tank level indicator, 5 gate valve for emptying the measuring tank, 6 twin tube manometers, 7 pipe sections, 8 measuring tank, 9 differential pressure manometer, 10 switch box, 11 pressure measuring point

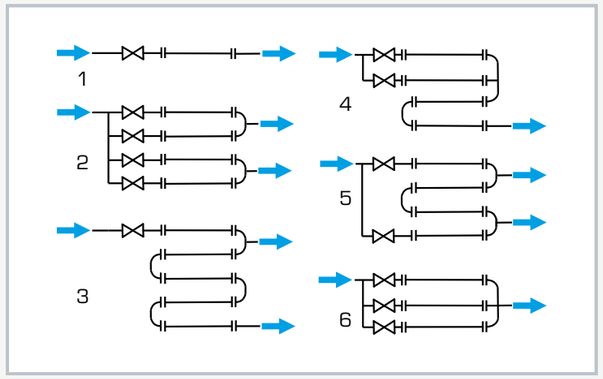


Different pipe networks constructed from pipe sections: 1 calibration of pipe sections, 2 doubling, 3 series connection, 4 parallel and series connection, 5 closed circular pipeline, 6 parallel connection

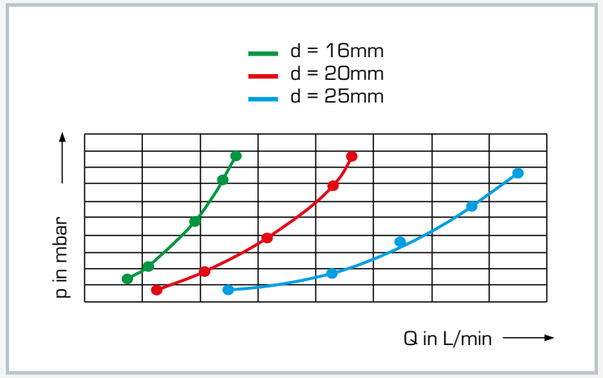


The diagram shows the pressure loss over flow rate for different pipe diameters: p pressure, Q flow rate, d inner diameter

### Specification

[1] investigation of different pipe networks
[2] five pre-installed pipe sections with different diameters
[3] panel for piping elements
[4] construction of pipe networks from pipe sections and various piping elements
[5] calibration of pipe sections
[6] parallel and series connection of pipe sections
[7] construction of a closed circular pipeline
[8] differential pressure measurement with twin tube manometers and differential pressure manometer
[9] flow rate measurement with measuring tank (can be shut off), stopwatch and level indicator

### Technical data

Pump
- power consumption: 250W
- max. flow rate: $9m^3/h$
- max. head: 7,6m

Pipe network, max. flow rate: $4,8m^3/h$
Pipe sections, length 700mm each
- 1x: 25x1,9mm
- 2x: 20x1,5mm
- 2x: 16x1,2mm

Twin tube manometers
Tank for water: 180L

Tank for flow rate measurement
- small measuring range: 10L
- large measuring range: 40L

Stopwatch: 1/100s

Measuring ranges
- differential pressure: 1x 0...1bar
- differential pressure with tube manometers: 2x 0...100mbar

230V, 50Hz, 1 phase
230V, 60Hz, 1 phase; 120V, 60Hz, 1 phase
UL/CSA optional
LxWxH: 1550x800x1600mm
Weight: approx. 117kg

### Scope of delivery

1 trainer
1 stopwatch
1 set of instructional material

# HM 124
# Pipe flow in a complex experimental plant

The HM 124 fluid mechanics experimental plant allows a number of experiments from the field of fluid mechanics. It consists of the following modules: pump station, various measuring sections, control station, tank system and optional pressure controlled system.

This extensive experimental plant makes it possible to conduct sophisticated experiments in the field of fluid mechanics.

The individual design of the pipe sections and the use of industrial valves and fittings and measurement techniques teach the field of pipe flow to a large extent and with great practical relevance.

The large scale of experiment facilities enables realistic results.

HM 124 experimental plant in a laboratory with extended pressure vessel as experiment section

Industrial metrology

**For more details on this experimental plant see chapter 7.**

**Experiments in the field of pipe flow**

- measurements of pressure losses in pipe bends and in pipes of different roughness
- measurements of the velocity distribution in pipes
- visualization of the pipe flow
- determination of loss coefficients in valves and fittings
- recording of opening characteristics and $K_v$ values
- adjustment and maintenance on valves

**Further experiments**

- recording pump characteristics
- determining pump efficiencies
- influence of system characteristic on flow rate and operating point of the pumps

Pipe elements: 45° and 90° pipe bends

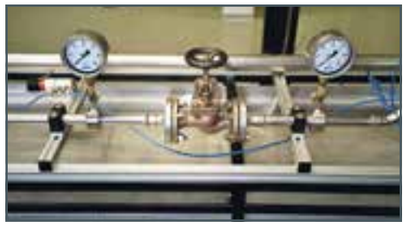

Valves and fittings: valves, strainers, flow straightener, control valve

## The measuring section

The length of the measuring section provides adequate inlet and outlet sections for flow formation. Observation of the pipe flow in the wake of a fitting is made possible by injecting ink into a transparent pipe.

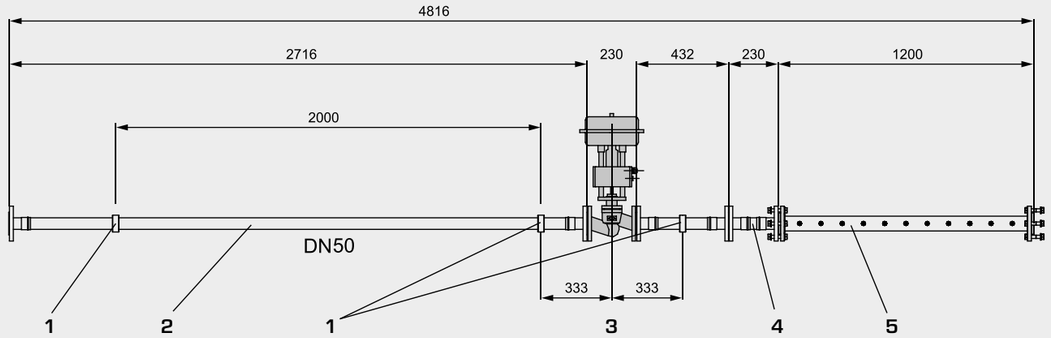


**1** measuring points for pressure losses in pipe elements, **2** defined pipe section for measuring pipe friction coefficients, **3** measuring range for valve testing $K_v$ value, **4** pipe element or flow straightener, **5** transparent pipe section is used for observation of the reduction in vortices after disturbances

## Overview of data acquisition

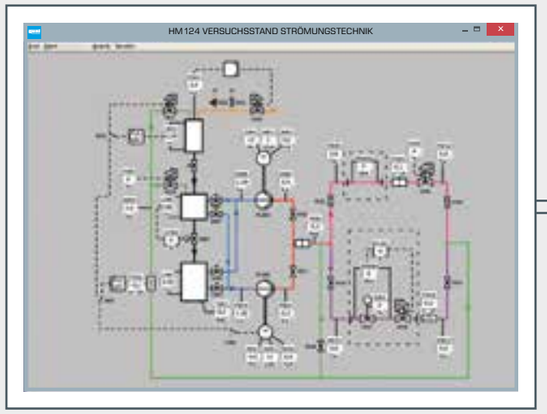


All measured values from the experimental plant HM 124 are presented in a clear schematic in a PC.

**Schematics and subtemplates are available in the software for detailed series of experiments**

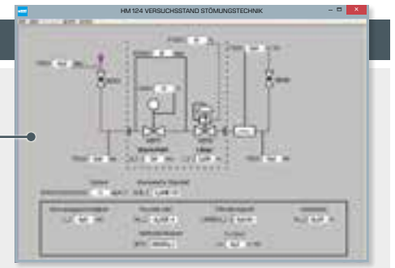


Determine opening characteristic and $K_v$ values at valves and fittings and control valves

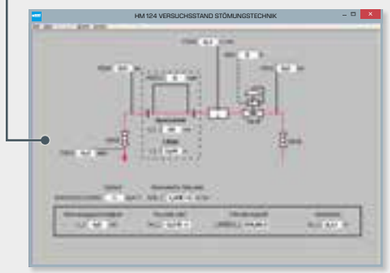


Measure pressure losses in pipe sections and pipe elements

# HL 102
## Installation technology: losses in different pipes

The illustration shows a similar unit.

### Description

- **pressure loss in pipes**
- **different materials and diameters**

When flow passes through pipes, pressure losses occur due to the friction between the pipe wall and the water. The pressure loss is directly dependent on the surface roughness of the pipe inner wall, and thus on the material used. In addition, the pressure loss is affected by the flow velocity and the cross-sectional area being flowed through.

The HL 102 unit makes it possible to study the pressure loss of incompressible fluids in fully flowed through straight pipe elements. The trainer is suitable for assessing how different materials and pipe diameters affect the flow. The pipe elements used are commercially standard components in heating and sanitary engineering. The clear panel is mounted on a sturdy, movable frame.

Four straight pipe elements are mounted on the panel. These can be selected individually by ball valves. The flow is adjusted using valves in the inflow and return and read on a rotameter.

The pressure measuring points in the pipe system are designed as annular chambers and are located between the beginning and end of the measuring sections, ensuring a precise pressure measurement. The sensors are connected in pairs to a differential pressure meter and the respective differential pressure read on the display.

### Learning objectives/experiments

- investigation of the pressure losses of flow through pipes
  - measurement of the pressure differential on different pipe sections
  - influence of various pipe diameters
  - influence of different materials and surface roughness
  - effect of the flow velocity
  - comparison between experiment and theory



# HL 102
## Installation technology: losses in different pipes

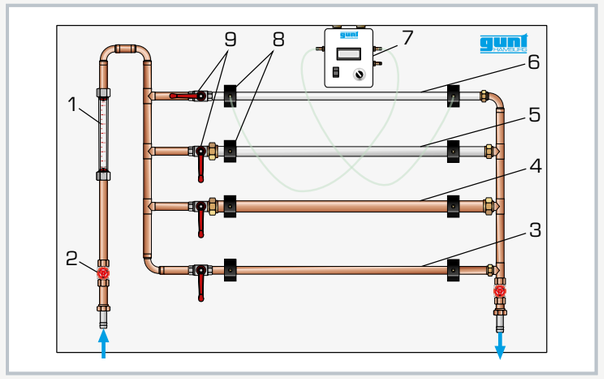


1 flow meter, 2 inflow valve, 3 copper pipe section 15x1mm, 4 copper pipe section 18x1mm, 5 steel pipe section 1/2", 6 transparent plastic pipe section, 7 differential pressure meter, 8 pressure measuring points, 9 ball valves for selecting pipe sections

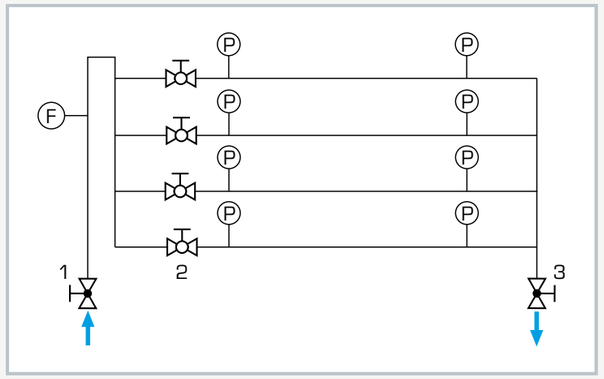


Process schematic with position of the measuring points: 1 inflow, 2 ball valve for selecting the measuring section, 3 return; P pressure, F flow

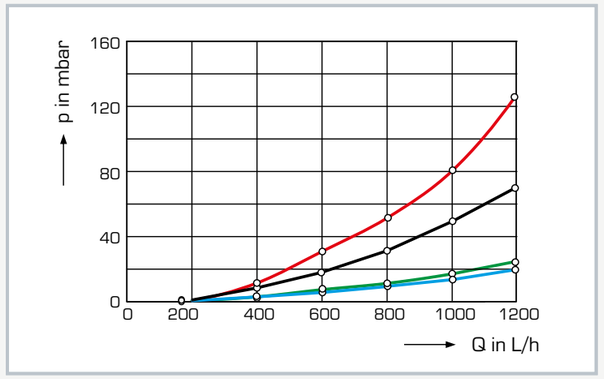


Measured differential pressures at different flow rates:
red: plastic, black: copper diameter=15x1mm, green: steel diameter=1/2", blue: copper diameter=18x1mm; Q flow rate, p pressure

### Specification

[1] investigation of friction-induced pressure losses in flow through pipes
[2] pipe elements are commercially standard components in heating and sanitary engineering
[3] clear panel mounted on a sturdy, movable frame
[4] four measuring sections with different pipe cross-sections and materials
[5] pipe sections can be selected via ball valves
[6] water connections made using quick-release couplings in the inflow and return
[7] flow can be adjusted via valves
[8] flow measurement using rotameter
[9] differential pressure measurement via differential pressure meter with display

### Technical data

Pipe sections measuring length: 1000mm
- pipe section 1: transparent plastic, diameter: 20x1,5mm
- pipe section 2: steel, diameter: 1/2"
- pipe section 3: copper, diameter: 18x1mm
- pipe section 4: copper, diameter: 15x1mm

Differential pressure meter

Measuring ranges
- flow rate: 150...1600L/h
- differential pressure: ±350mbar

LxWxH: 1650x700x1850mm
Weight: approx. 92kg

### Required for operation

water connection 1500L/h, drain

### Scope of delivery

1 trainer
1 differential pressure meter
1 set of hoses
1 set of instructional material

# HL 103
## Installation technology: losses in pipe bends

### Description

- **flow resistances in pipes**
- **measuring sections with different materials and deflections**

In addition to pressure losses due to pipe friction, pipes through which water flows experience pressure losses at changes in pipe direction. In practice, various changes in pipe direction with different geometries are used in pipe networks.

HL 103 can be used to investigate how different changes in pipe direction made from different materials affect the pipe flow. The pipe elements used are commercially standard components in heating and sanitary engineering. The clear panel is mounted on a sturdy, movable frame.

The trainer consists of four pipe elements with ten deflections each with the same pipe length. Two measuring sections have different radii and are made of different materials. A hose connects the desired measuring section. The flow is adjusted using valves in the inflow and return and read on a rotameter.

The pressure measuring points in the pipe system are designed as annular chambers and are located between the beginning and end of the measuring sections, ensuring a precise pressure measurement. The sensors are connected in pairs to a differential pressure meter and the respective differential pressure read on the display.

### Learning objectives/experiments

- flow measurement
- differential pressure measurement
- effect of flow and surface roughness
- effect of the flow velocity
- effect of changes in pipe direction



# HL 103
## Installation technology: losses in pipe bends

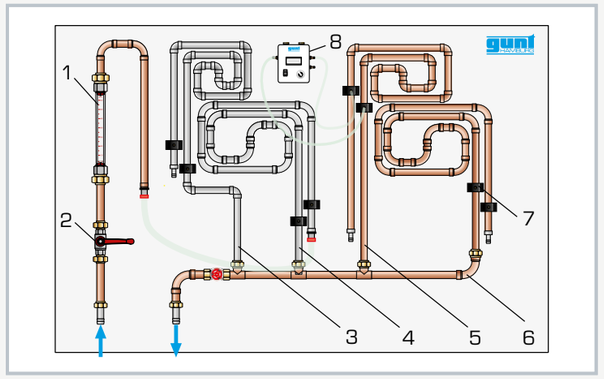


1 flow meter, 2 inflow valve, 3 steel/pipe angle measuring section, 4 steel/ pipe bend measuring section, 5 copper/pipe angle measuring section, 6 copper/ pipe bend measuring section, 7 pressure measuring point, 8 differential pressure meter

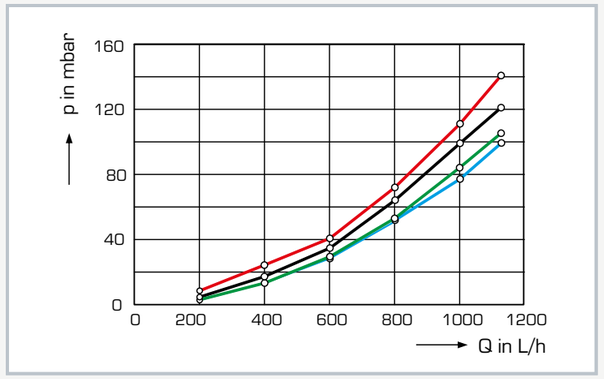


Measured differential pressures at different flow rates: red: pipe angle/steel, black: pipe bend/steel, green: pipe angle/copper, blue: pipe bend/copper; Q flow rate, p pressure

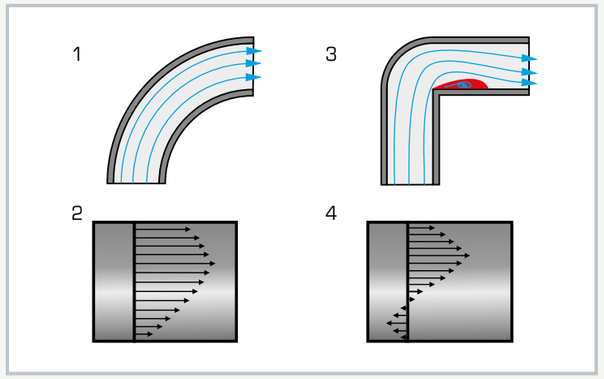


1 flow course in the pipe bend, 2 flow profile at the outlet of a pipe bend, 3 flow course in the pipe angle, 4 flow profile at the outlet of a pipe angle

### Specification

[1] investigation of the pressure loss at pipe elements with different changes in pipe direction and materials
[2] pipe elements are commercially standard components in heating and sanitary engineering
[3] clear panel mounted on a sturdy, movable frame
[4] simply selection of the measuring sections via hose connection with quick-release couplings
[5] flow can be adjusted via valves
[6] flow measurement using rotameter
[7] differential pressure measurement via differential pressure meter with display

### Technical data

Measuring sections, length: 2300mm
- pipe section 1: steel, diameter: 1/2", 90° pipe angle
- pipe section 2: steel, diameter: 1/2", 90° pipe bend
- pipe section 3: copper, diameter: 18x1mm, 90° pipe angle
- pipe section 4: copper, diameter: 18x1mm, 90° pipe bend

Measuring ranges
- flow rate: 150...1600L/h
- differential pressure: ±350mbar

LxWxH: 1650x700x1850mm
Weight: approx. 100kg

### Required for operation

water connection 1700L/h, drain

### Scope of delivery

1 trainer
1 differential pressure meter
1 set of connecting hoses
1 set of instructional material

# HL 113
## Installation technology: losses in valves and fittings

The illustration shows a similar unit.

### Learning objectives/experiments

- pressure losses in valves and fittings
- measuring the pressure difference
- effect of the valve orifice shape on the pressure loss
- effect of the flow velocity
- determination of resistance coefficients
- comparison between experiment and calculation

### Description

- **trainer for heating and sanitary engineering**
- **pressure losses in standard valves and fittings**

Pressure losses occur in pipe systems as a result of friction and turbulence. In practice, the use of shut-off valves and fittings causes pressure losses that need to be taken into consideration when designing pipe networks.

The HL 113 unit can be used to investigate the pressure losses of different shut-off valves and fittings. The pipe elements used are commercially standard components in heating and sanitary engineering. The clear panel is mounted on a sturdy, movable frame.

The trainer consists of five pipe sections, in each of which different shut-off valves and fittings are fitted. The pipe sections can be individually selected via ball valves.

One of the pipe sections is transparent with a transparent ball valve in order to visualise the flow conditions upstream and downstream of a shut-off valve. The flow is adjusted using valves in the inlet and outlet and read on a rotameter.

The pressure measuring points in the pipe system are designed as annular chambers and are located directly upstream and downstream of the valves and fittings, ensuring a precise pressure measurement. The sensors are connected in pairs to a differential pressure meter and the respective differential pressure read on the display.



# HL 113
## Installation technology: losses in valves and fittings

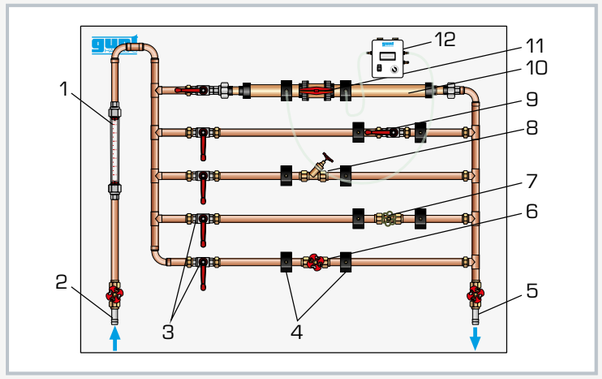


1 flow meter, 2 water supply, 3 ball valves for selecting pipe sections, 4 annular chambers, 5 drain, 6 gate valve, 7 screw-down valve, 8 angle seat valve, 9 ball valve, 10 transparent pipe section, 11 ball valve (transparent plastic), 12 differential pressure manometer

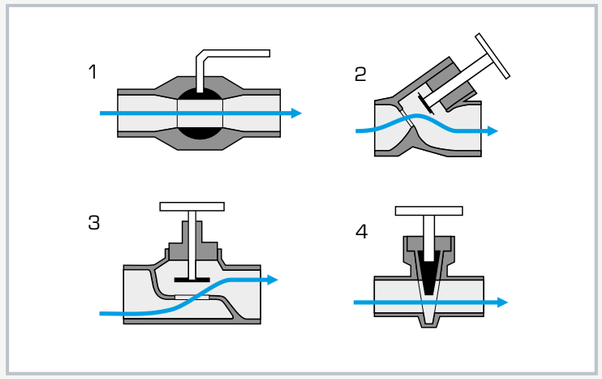


Schematic cross-sectional representation of the various valves and their function: 1 ball valve, 2 angle seat valve, 3 screw-down valve, 4 gate valve

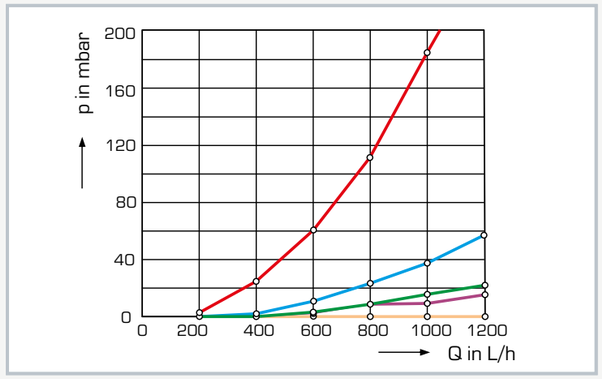


Pressure loss in the valves and fittings at different flow rates: red: screw-down valve, blue: angle seat valve, green: gate valve, purple: ball valve DN15, orange: ball valve DN32; p pressure, Q flow rate

### Specification

[1] investigation of the pressure losses at various shut-off valves and fittings
[2] pipe elements are commercially standard components in heating and sanitary engineering
[3] clear panel mounted on a sturdy, movable frame
[4] pipe sections can be individually selected via ball valves
[5] water connections with quick-release couplings
[6] flow can be adjusted via valves
[7] flow measurement using rotameter
[8] differential pressure measurement via differential pressure meter with display

### Technical data

Ball valve, plastic, transparent, Ø: DN32
Ball valve, steel, Ø: DN15
Angle seat valve, Ø: DN15
Screw-down valve, Ø: DN15
Gate valve, Ø: DN15
Differential pressure meter

Measuring ranges
- flow rate: 200...1700L/h
- pressure: ±200mbar

LxWxH: 1650x700x1850mm
Weight: approx. 90kg

### Required for operation

water connection, drain

### Scope of delivery

1 trainer
1 differential pressure meter
1 set of connecting hoses
1 set of instructional material

# HL 210
## Installation technology: losses in a pipe system

### Learning objectives/experiments

- pressure curve in a closed pipe system with circulation pump
- influence of pipe diameter, flow velocity, change in cross-section and pipe fittings on the pressure losses
- determination of pump characteristics, system characteristics and the operating point

### Description

- **visualisation of pressure losses**
- **comparison of losses of different pipe elements**
- **closed water circuit with circulation pump**

When water flows through a pipe system there are resistances as a result of changes in direction, valves and fittings and pipe friction. The flow resistances are directly dependent on the geometry of the pipe elements and the number and type of fittings. In addition, the flow velocity plays a key role in the occurrence of pressure losses.

The HL 210 unit can be used to investigate and visualise the pressure distribution in a pipe system. The trainer enables the examination by experiment of different influencing factors on the pressure losses in real pipe systems.

The relationship between pump characteristic and system characteristic is studied in the experiment. The pipe elements used are commercially standard components in heating and sanitary engineering. The clear panel is mounted on a sturdy, movable frame.

The trainer can be operated independently from the mains water network and is equipped with a pump and a water tank. Pipe elements with varying radii and straight pipes with varying diameters are located in a closed water circuit. In addition, various standard valves from heating engineering are also installed. There are pressure measuring points between the various elements in order to determine the pressure loss of each pipe element.

The respective pressures can be read via the tube manometer with reference to the height of the liquid column. The flow rate is measured by and read from a rotameter.



# HL 210
## Installation technology: losses in a pipe system

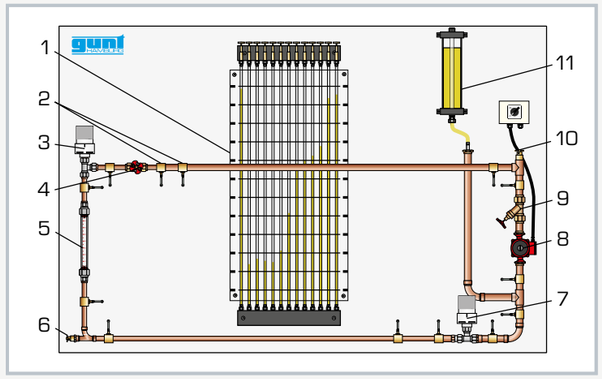


1 tube manometer panel, 2 pressure measuring point, 3 heater angle valve, 4 gate valve, 5 flow meter, 6 water drain, 7 heater valve, 8 pump, 9 angle seat valve, 10 bleed valve in the water circuit, 11 expansion tank

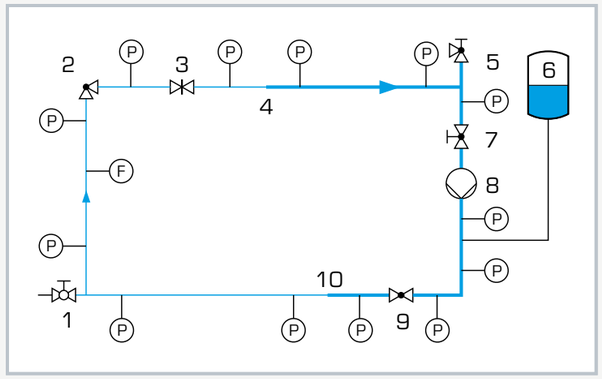


Process schematic with position of the measuring points: 1 water drain, 2 heater angle valve, 3 gate valve, 4 enlargement, 5 bleed valve, 6 expansion tank, 7 angle seat valve, 8 pump, 9 heater valve, 10 contraction; P pressure, F flow rate

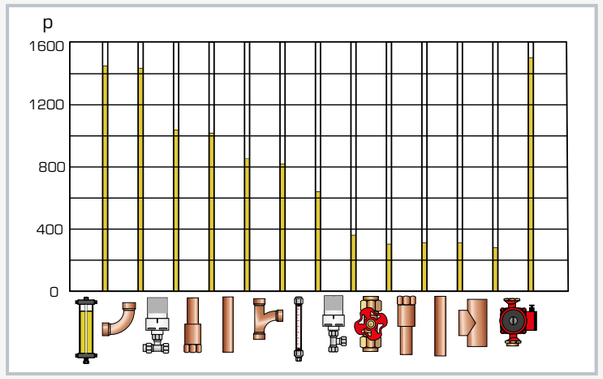


Schematic representation of the pressure loss in the pipe system: p pressure in mmWC

### Specification

[1] investigation of the pressure losses at contractions, pipe angles, pipe bends, valves and fittings and pipe elements of different diameter
[2] pipe elements are commercially standard components in heating and sanitary engineering
[3] clear panel mounted on a sturdy, movable frame
[4] closed water circuit with pump and tank
[5] integrated bleed valve on manometer and in the pipe section
[6] flow measurement using rotameter
[7] measurement of the pressure distribution at 13 pressure measuring points, display with 13 tube manometers

### Technical data

Pump
- 3 stages
- max. flow rate: 4,5m³/h
- max. head: 6m

Tank: approx. 5L

Measuring ranges
- flow rate: 100...1000L/h
- pressure: 1600mmWC

230V, 50Hz, 1 phase
LxWxH: 1900x700x2020mm
Weight: approx. 140kg

### Scope of delivery

1 trainer
1 set of instructional material

# HL 111
## Installation technology: losses in straight pipes

### Learning objectives/experiments

- hydrostatic pressure
- flow pressure
- pressure loss
- representation of pressure curves

### Description

- **pressure losses in straight pipes**
- **visualisation of the hydrostatic pressure and of the flow pressure**

The pressure curves of fluids in motion and fluids at rest in pipes are fundamentally different from one another. For the same supply pressure, losses occur in flowing fluids due to the pipe friction; these losses manifest themselves as pressure losses. In fluids at rest the static pressure in horizontal pipe elements is constant.

HL 111 visualises the pressure curve of flowing and static incompressible fluids in pipes. The trainer is suitable for explaining concepts such as the hydrostatic pressure in static and moving liquids. The clear panel is mounted on a sturdy, movable frame.

The supply pressure is generated by an elevated tank. In order to ensure a constant supply pressure, the tank is fitted with a refill mechanism and an overflow. A measuring section is located at the end of the tank. The flow and thus the flow velocity can be adjusted at two points.

There are six pressure measuring points along the measuring section. The respective pressures can be read via the tube manometer with reference to the height of the liquid column.



# HL 111
## Installation technology: losses in straight pipes

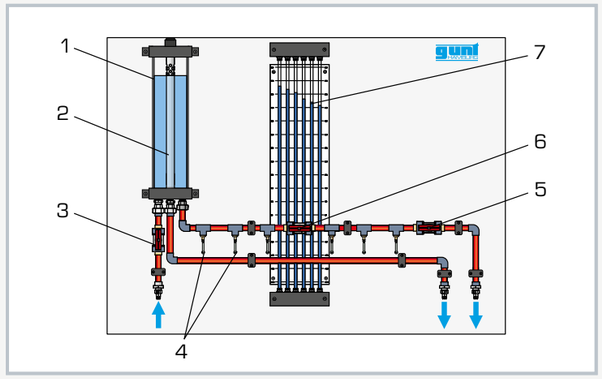


1 elevated tank, 2 overflow, 3 ball valve for inflow, 4 pressure measuring points with annular chambers, 5 ball valve for the drain, 6 adjustable resistor, 7 tube manometer panel

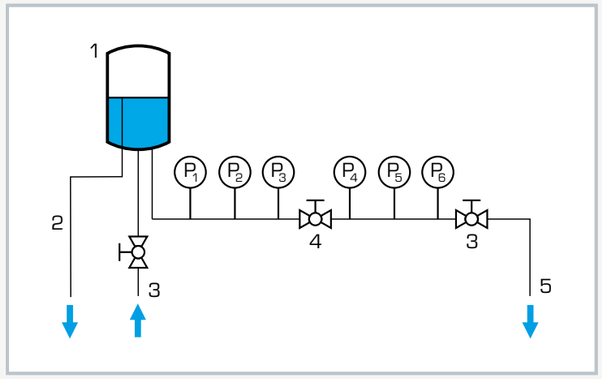


Process schematic: 1 tank, 2 overflow, 3 inflow/drain adjustment, 4 adjustable resistor, 5 water drain

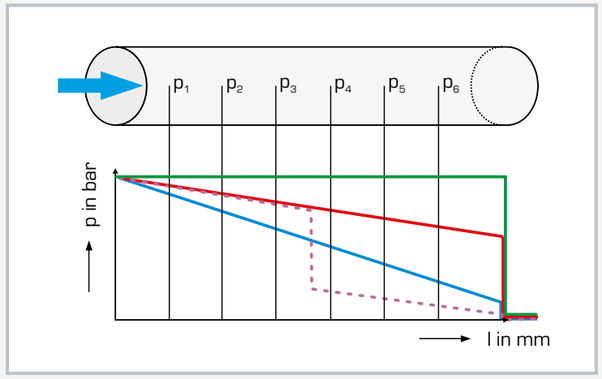


Linear pressure loss in the flow-through pipe element: $p_1$ to $p_6$ pressure measuring points; green: no flow, red: at mean flow velocity, blue: at full flow velocity, dashed purple: at mean flow velocity and resistance set via intermediary ball valve

### Specification

[1] pressure losses in the open pipe system
[2] clear panel mounted on a sturdy, movable frame
[3] transparent elevated tank with overflow to feed the pipe section
[4] constant static supply pressure
[5] flow can be adjusted via ball valves
[6] measuring section with 6 measuring points
[7] pressure displayed with 6 tube manometers

### Technical data

Tank: approx. 8L
6 tube manometers

Measuring ranges
- pressure: -200...600mmWC

LxWxH: 1650x700x1850mm
Total weight: approx. 90kg

### Required for operation

water connection, drain

### Scope of delivery

1 trainer
1 set of instructional material

# RT 390
## Test stand for control valves

The illustration shows a similar unit with accessory RT 390.01.

### Description

- **design and function of control valves**
- **determination of $K_v$ and $K_{vs}$ values**
- **GUNT software to plot valve characteristics and step responses**

Control valves are key components of process engineering systems. They act as an actuator and create a link between the controller and the system. Control valves are generally used for regulating flows of gases or liquids. Optimum control loop design depends on a sound knowledge of control valve behaviour as well as knowledge of the controlled system response.

The mobile test stand permits investigation and testing of different control valve models. A water circuit with a pump and tank is provided for this analysis. Connections permit integration of the valve under test into the water circuit. The flow rate is adjusted by a gate valve and recorded by an electromagnetic flow rate sensor. Two pressure sensors are used to measure the pressure upstream and downstream of the control valve.

The supply pressure for electro-pneumatic valves can be adjusted by a pressure regulator on the switch cabinet. The manipulating variable can be set on potentiometers as a current signal. The position feedback from the valve is also returned as a current signal. Motorised valves are actuated by way of pushbuttons. A resistance teletransmitter measures the valve stroke.

The GUNT software for data acquisition can be used to plot and evaluate valve characteristics and step responses on a PC in a user-friendly way.

### Learning objectives/experiments

- together with control valves RT 390.01 – RT 390.06
  - demonstration and functional testing of control valves
  - determination of $K_v$ and $K_{vs}$ values
  - plotting valve characteristics
  - dynamic response of control valves: plotting step responses
  - influence of supply pressure on pneumatically operated valves
  - maintenance and adjustment

# RT 390
## Test stand for control valves

1 switch cabinet with controls, 2 flow rate sensor, 3 pressure reducing valve for air connection , 4 pump, 5 tank, 6 adjustement of flow rate, 7 pressure sensor, 8 outlet control valve, 9 inlet control valve

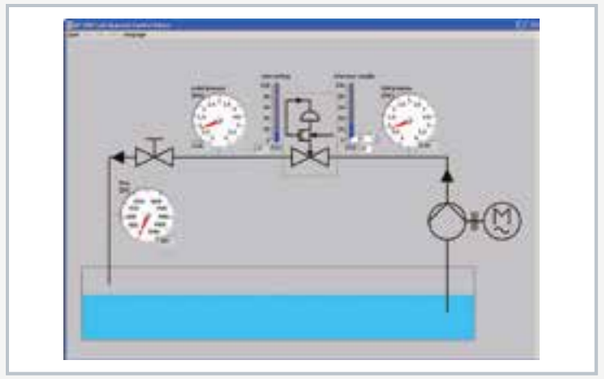

Software screenshot

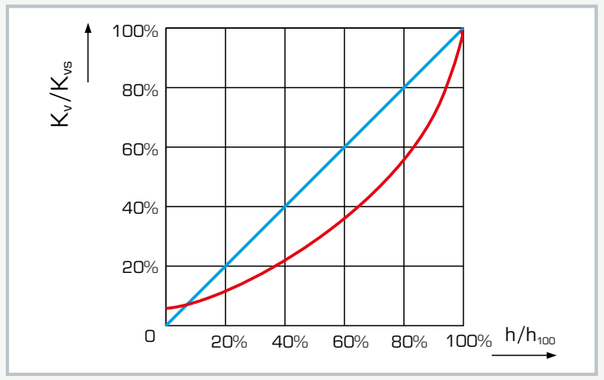


Theoretical characteristics of a linear (blue) and equal-percentage (red) valve curve: $K_v$ flow coefficient, $K_{vs}$ flow coefficient with valve fully open, h valve stroke

### Specification

[1] investigation and testing of control valves
[2] water circuit with tank, pump and connections for control valves
[3] electromagnetic flow rate sensor
[4] 2 pressure sensors to measure the pressure drop over the control valve
[5] gate valve to adjust the flow rate
[6] potentiometer to actuate electro-pneumatic valves with a current signal
[7] pushbuttons to actuate motorised valves
[8] manometer and pressure regulator to adjust the working pressure for electro-pneumatic valves
[9] position feedback via current signal (electro-pneumatic valves) or resistance teletransmitter (motorised valves)
[10] GUNT software for data acquisition via USB under Windows 7, 8.1, 10

### Technical data

Tank: approx. 90L

Two-stage centrifugal pump
- max. head: 22m
- max. flow rate: 5,4m$^3$/h

Signals
- DC: 4...20mA
- resistance: 0...1000Ω

Auxiliary power
- AC: 24V
- air pressure for electro-pneumatic valves : 0...6bar

Measuring ranges
- flow rate: 0...4500L/h
- pressure:
  - 2x 0...6bar (water)
  - 1x 0...6bar (air)

230V, 50Hz, 1 phase
230V, 60Hz, 1 phase
120V, 60Hz, 1 phase
UL/CSA optional
LxWxH: 1250x750x1430mm
Weight: approx. 190kg

### Required for operation

Compressed air connection: min. 3bar
PC with Windows recommended

### Scope of delivery

1 trainer
1 set of hoses
1 GUNT software CD + USB cable
1 set of instructional material

# RT 396
## Pump and valves and fittings test stand

### Description

- **plotting characteristics of industrial valves and fittings**
- **comparison of different valves and fittings**
- **characteristics of a centrifugal pump**

RT 396 allows the characteristics of different valves and fittings to be compared. The typical kinds of valves and fittings are represented by a ball valve, a butterfly valve, a gate valves, a shut-off valve and a control valve. A safety valve and a dirt trap are also investigated. All valves and fittings are flanged, and can be installed in a pipe section with variable length. The pipe section is part of a closed water circuit. Pressure measurement points upstream and downstream of the valve and fitting under test are linked by a differential pressure manometer. This manometer is fitted with a pressure switch which activates a warning lamp if the pressure difference becomes excessive, such as when the filter is clogged. An electromagnetic flow rate sensor permits precise recording of the flow rates.

The closed water circuit contains three butterfly valves, to isolate the pump, and to adjust the pressure upstream and downstream of the test fitting. Differential pressures across the pump and test fitting, the power consumption and speed of the pump, and the flow rate and opening angle of the control valve are recorded and displayed. The measured data can also be used to plot pump characteristics.

A vice is included, on a separate workbench, for maintenance and assembly work. The workbench also incorporates the necessary tools and connecting hoses.

### Learning objectives/experiments

- characteristics of a centrifugal pump
- behaviour during operation and function of
  - ball valve
  - butterfly valve
  - shut-off valve
  - wedge gate valve
  - control valve
  - safety valve
  - dirt trap
- valve characteristics
- determining the $K_{vs}$ value of the control valve
- pressure losses at the dirt trap depending on the filter and its load
- planning, execution and assessment of maintenance and repair operations
- reading and understanding engineering drawings and operating instructions



RT 396
Pump and valves and fittings test stand

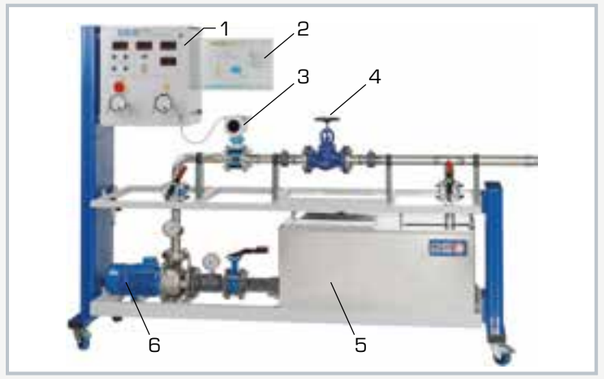


1 switch cabinet with displays and controls, 2 process schematic, 3 flow rate sensor, 4 pipe section with place for test fitting, 5 supply tank, 6 pump

Supplied valves and fittings: 1 dirt trap, 2 ball valve, 3 safety valve, 4 butterfly valve, 5 shut-off valve, 6 wedge gate valve, 7 control valve

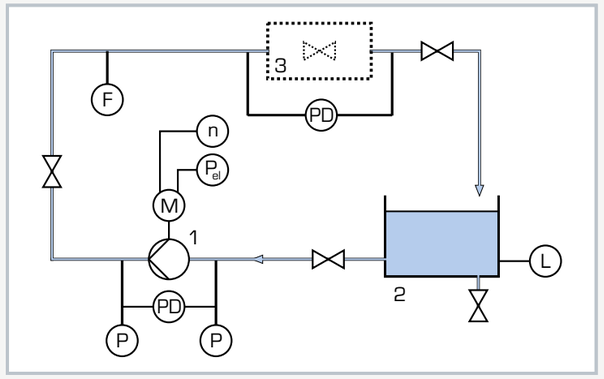


1 pump, 2 tank, 3 test fitting;
sensors: E power, F flow rate, L level, P pressure, PD differential pressure, n speed

### Specification

[1] trainer for testing various valves and fittings
[2] installation of the test fitting in a pipe section of variable length
[3] centrifugal pump with variable speed via frequency converter
[4] fine pressure regulator adjusts compressed air pressure
[5] tank cover as collecting tray under test device
[6] manometers at inlet and outlet of centrifugal pump
[7] pressure measuring points upstream and downstream of test device for differential pressure manometer with pressure switch
[8] digital displays for flow rate, power output, speed, position of control valve

### Technical data

Centrifugal pump
- power consumption: 4kW
- max. flow rate: $72m^3/h$
- max. head: 26,5m
- speed: $1450...2900min^{-1}$

Supply tank with cover: capacity: 400L
Test valves and fittings:
- safety valve 1", 1,5bar
- shut-off valve DN50 / PN16
- ball valve with pneumatic drive DN50
- butterfly valve DN50 / PN16
- wedge gate valve DN50 / PN16
- electric control valve DN50 / PN16
- dirt trap DN50 / PN16 with 2 filter elements

Measuring ranges
- differential pressure manometer: 0...2,5bar / 0...4bar
- manometer: 0...4bar / -1...0,6bar
- flow rate: 35...1100L/min
- opening range of control valve: 0...100%
- power output: 0...4000W
- speed: $0...2900min^{-1}$

400V, 50Hz, 3 phases
400V, 60Hz, 3 phases
LxWxH: 2510x790x1900mm (test stand)
Weight: approx. 245kg (test stand)
LxWxH: 1200x670x1100mm (workbench)
Weight: approx. 100kg (workbench)

### Required for operation

Compressed air supply 8bar

### Scope of delivery

1 trainer with centrifugal pump
1 control valve, 1 dirt trap, 1 safety valve, 1 shut-off valve, 1 ball valve, 1 butterfly valve, 1 wedge gate valve
1 workbench with tools and hoses
1 set of instructional material

# HM 500 + Accessories
# Methods of flow rate measurement

## Properties and applications of different flow meters

The extensive range of accessories for the HM 500 trainer offers the opportunity to learn about many different types of flow meter and the fields of applications of the various instruments. In practice, the working medium, the accuracy demands imposed, the position of the measuring instrument and the commercial considerations play an important role. Knowledge of the pressure losses of the different instruments is necessary for their application. Therefore, each instrument for the HM 500 trainer is equipped with connections for measuring the pressure loss. The instruments are connected to the trainer via hoses. The pressure losses are displayed on the trainer accordingly.

The comprehensive instructional materials cover the principle of operation of each flow meter including the theoretical basis. In this way students are familiarised with measurement accuracy and the differences between the measurement principles. Practical experiments make it possible to apply and review the acquired knowledge.

If required, the measuring devices can be powered by the trainer.

### The position is important for correct operation: only upright mounting

**HM 500.01**
Rotameter

**HM 500.03**
Rotameter with transducer

**Both flow meters are identical in design and must be installed vertically due to their measuring principle.**

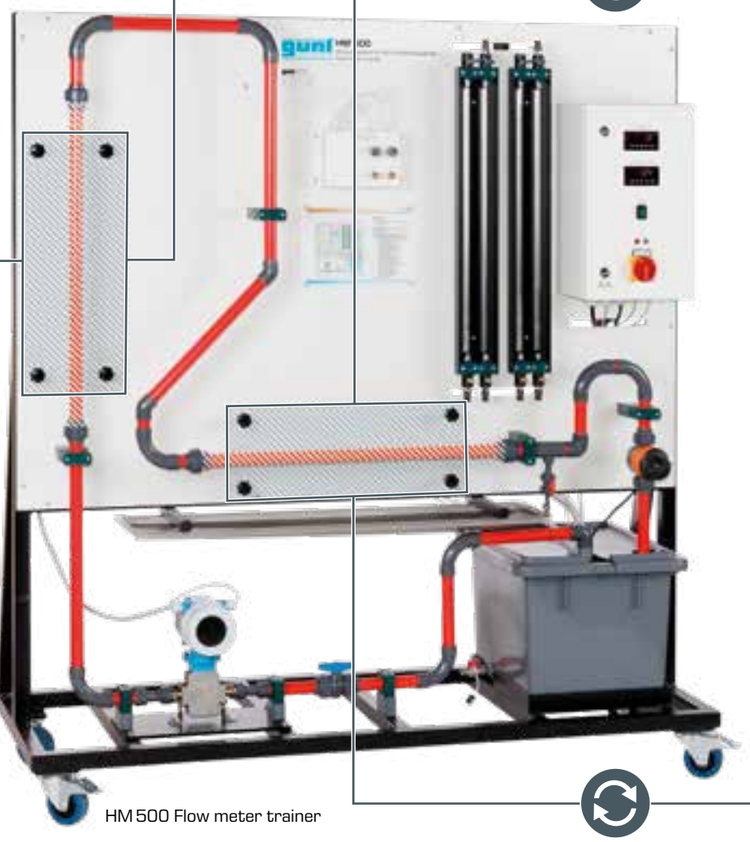

HM 500 Flow meter trainer

### Operation independent of position: upright or horizontal mounting

**HM 500.05**
Ultrasonic flow meter

**HM 500.07**
Pitot tube

**HM 500.10**
Paddle wheel flow meter

**HM 500.11**
Vortex flow meter

**HM 500.13**
Orifice plate flow meter with transducer

**HM 500.14**
Turbine wheel flow meter

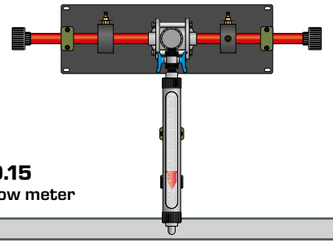

**HM 500.15**
Bypass flow meter

**HM 500.04**
Electromagnetic flow meter

**HM 500.06**
Venturi nozzle

**HM 500.08**
Orifice plate flow meter

**HM 500.09**
Measuring nozzle

**HM 500.16**
Baffle plate flow meter

### The position is important for correct operation: only horizontal mounting

# HM 500
## Flow meter trainer

### Description

- **comparison and calibration of different flow meters**
- **plotting of pressure loss curves**
- **numerous flow meters available as accessories**

Flow measurement plays a key role in many process engineering systems. Different flow meters are used for this, depending on the medium and application.

The HM 500 trainer is used to examine different principles of operation of flow meters. The flow meters are available as accessories (HM 500.01-HM 500.16). Pressure loss curves and accuracies can be compared to determine which flow meter is suitable for which area of application.

One horizontally or vertically installed flow meter can be operated in a closed water circuit. The flow rate can be adjusted via a valve. A high-precision electromagnetic flow rate sensor is available as a reference for calibrating the flow meters.

To be able to determine the pressure losses of the various flow meters, the trainer is equipped with two twin tube manometers and a differential pressure sensor. A DC voltage source ensures the power supply to the flow meters if required.

### Learning objectives/experiments

- together with different flow meters available as accessories
  - different flow meters and their principles of operation
  - calibration of different flow meters
  - position dependency of flow meters
  - plotting and comparison of pressure loss curves

# HM 500
## Flow meter trainer

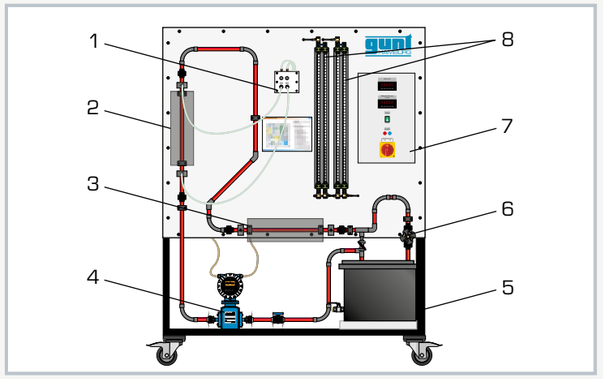


1 differential pressure sensor, 2 vertical measuring location with HM 500.10, 3 horizontal measuring location with empty tube, 4 electromagnetic flow rate sensor, 5 tank with pump, 6 valve to adjust flow rate, 7 switch cabinet, 8 twin tube manometers

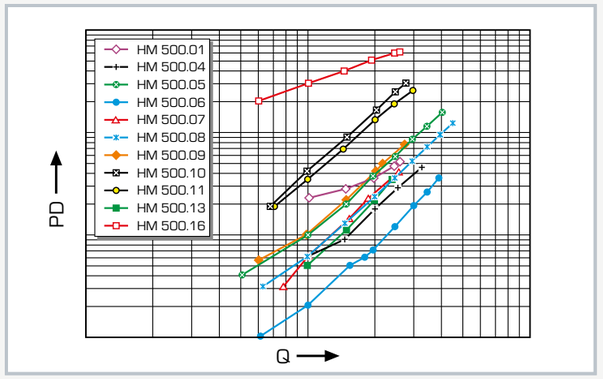


Pressure loss (PD) dependent on the flow rate (Q) for the flow meters available as accessories

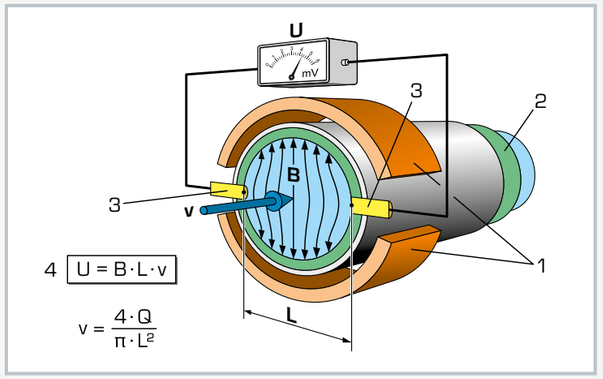


Measurement principle of the electromagnetic flow rate sensor:
1 magnet, 2 insulation, 3 electrode, 4 Faraday's Law of Induction; B magnetic flux density, L electrode gap, Q flow rate, U induced voltage, v flow velocity of medium (blue)

### Specification

[1] comparison and calibration of different flow meters
[2] water circuit with tank, pump and valve to adjust flow rate
[3] 2 measuring locations for vertical or horizontal installation of the flow meters under test
[4] electromagnetic flow rate sensor for reference measurement
[5] 1 differential pressure sensor and twin tube manometers for measurement of pressure losses
[6] DC voltage source to supply the flow meters with auxiliary power
[7] flow meters available as accessories

### Technical data

Tank: approx. 55L
Pump
- max. flow rate: approx. 225L/min
- max. head: approx. 11m

DC voltage source
- voltage: 24VDC
- current: 2,0A

Accuracy of electromagnetic flow rate sensor
- 0.5% of final value

Measuring ranges
- flow rate (reference): 0...4760L/h
- differential pressure sensor: 0...2bar
- twin tube manometers: 0...680mmWC

230V, 50Hz, 1 phase
230V, 60Hz, 1 phase
120V, 60Hz, 1 phase
UL/CSA optional
LxWxH: 1770x670x1880mm
Weight: approx. 110kg

### Scope of delivery

1 trainer
1 set of hoses
1 set of cables
1 set of instructional material

Basic knowledge

# Cavitation

## When does cavitation occur?

When liquids flow, flow processes may cause local pressures that are smaller than the corresponding vapour pressure of the liquid. In this case, the liquid evaporates and vapour bubbles are formed. The increase in the volume caused by evaporation changes the flow patterns relative to the undisturbed flow. In pumps the vapour bubbles can grow to the extent that the remaining flow cross-section is greatly reduced and the performance of the pump is impaired. The process is often unstable since the flow velocity increases due to the reduction of the flow cross-section and thus cavitation is encouraged by further pressure loss.

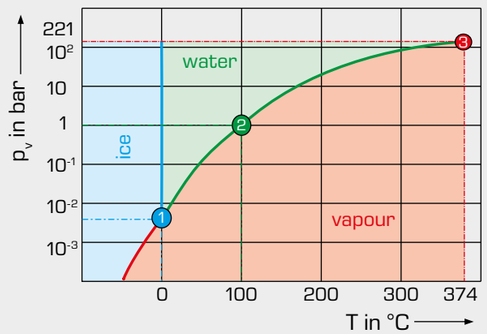


Temperature-pressure diagram of water

**1** triple point, **2** boiling point, **3** critical point;
sublimation curve, boiling point curve, melting point curve

Formation of vapour bubbles due to cavitation at a pump impeller (HM 380)

### Machine damage caused by cavitation

Considerable damage is caused by the erosion of the material that occurs in connection with cavitation. When the pressure re-increases the vapour bubbles implode. During the implosion a very rapid liquid jet forms in the vapour bubble, capable of generating pressure of several 1000 bar on impact with a solid material. This erodes the material of propellers, valve plates or impellers. Therefore especially hard and resistant materials must be used in machines subject to damage caused by cavitation.

Cavitation also often results in corrosion. Protective layers are removed and the roughened, porous surface provides ideal conditions for corrosion.

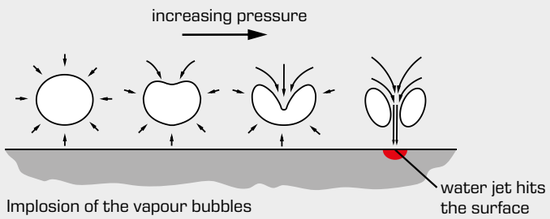


Implosion of the vapour bubbles

Pump impeller destroyed by cavitation erosion

Ship's propeller destroyed by cavitation erosion

## Artificial generation of cavitation

The occurrence of cavitation can be clearly shown in a Venturi tube, such as GUNT's ST 250 device. The flow is accelerated in the convergent part, thereby reducing the pressure. When the vapour pressure $p_v$ is exceeded, vapour bubbles are formed in the narrowest cross-section. Depending on the intensity, these disappear again in the divergent part or remain for a longer distance.

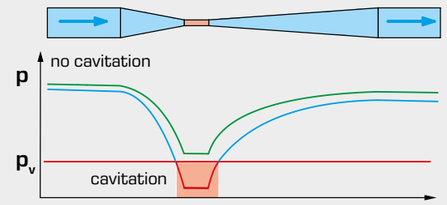


Cavitation in a Venturi tube

## Criteria for the occurrence of cavitation

The criteria for the occurrence of cavitation are mainly the cavitation number and the required net suction head.

The dimensionless **cavitation number σ** is a means for measuring when cavitation occurs in a fluid.

$$\sigma = \frac{p - p_v}{\frac{\rho}{2} \cdot v^2}$$

**ρ** density, **p** pressure, $p_v$ vapour pressure, **v** flow velocity

Another criterion is the NPSH value (Net Positive Suction Head). The NPSH value corresponds to the (pressure) energy of a liquid column under the present operating conditions at the connecting flange. The value is always positive.

A distinction is made between two NPSH values:

**NPSHA** (Net Positive Suction Head Available): This is the available system pressure at operating conditions as the height difference.

**NPSHR** (Net Positive Suction Head Required): This is the pressure required for operation of the pump as the height difference.

Here, the **system's NPSHA** must always be above the **pump's required NPSHR** value.

### Avoiding cavitation

In order to avoid cavitation, the **cavitation number σ** must be kept as high as possible. On the other hand, a small cavitation number results in high energy efficiency and turbomachines with small dimensions.

The following measures reduce the tendency to cavitation:

- avoid low pressures
- avoid temperatures near the fluid's boiling point
- use thin blade profiles
- choose blades with low angle of attack
- avoid abrupt deflections of the flow
- round off the leading edge

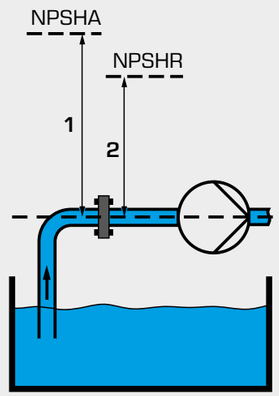


Difference between NPSHA (1) and NPSHR (2):

**1** pressure energy provided by the system,
**2** pressure energy required by the pump

# HM 380
## Cavitation in pumps

### Description

- **visualisation of cavitation effects in a transparent pump**
- **continuously adjustable pump speed**
- **closed water circuit**

One of the most common causes of cavitation effects are fast moving objects in the water, such as the impellers of a centrifugal pump. If cavitation occurs on the impeller, the high mechanical stress sometimes results in separation or deformation of particles from the surface. In addition to the impeller geometry, intake pressure and temperature are also relevant for the occurrence of cavitation.

The HM 380 unit can be used to demonstrate cavitation effects on impellers of centrifugal pumps. Pump housing and the pipe at the inlet side of the pump are made of transparent plastic in order to visualise the cavitation processes. It is possible to capture excellent images of the vapour bubbles by taking photographs with short exposure times (flash).

In order to influence the flow velocity at the impeller blades, the speed can be changed within a wide range via a frequency converter. Valves at the inlet and outlet of the pump enable the flow rate and pressures to be adjusted accordingly.

Pressures on the inlet and outlet side are displayed on two manometers. Also displayed are the water temperature in the tank, flow rate and pump speed. The water temperature can be controlled and the tank is fitted with a heater. The water is cooled via the water supply.

### Learning objectives/experiments

- formation of cavitation
- observation of cavitation effect
- how speed, inlet pressure, flow rate and temperature affect cavitation



# HM 380
## Cavitation in pumps

1 tank, 2 valve at inlet, 3 manometer at inlet, 4 transparent pump, 5 manometer at outlet, 6 digital displays for flow rate and speed, 7 valve at outlet, 8 temperature controller, 9 flow meter

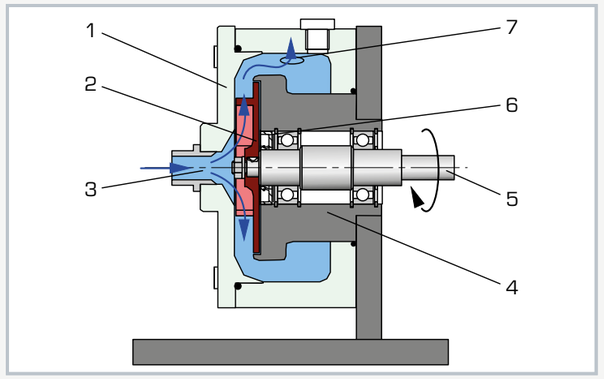


Section through the pump: 1 transparent housing with removable cover, 2 open impeller, 3 inlet, 4 bearing body, 5 drive shaft, 6 shaft seal, 7 outlet

Formation of vapour bubbles due to cavitation at the pump impeller

### Specification

[1] visualisation of cavitation in centrifugal pumps
[2] transparent pump housing and pipe at the inlet side
[3] open impeller to observe the blades during operation
[4] continuously adjustable pump speed via frequency converter
[5] temperature control via heater and external cooling via water supply
[6] flow measurement using rotameter
[7] display of the pressures at inlet and outlet side of the pump via manometers
[8] digital display of speed, water temperature in the return and flow rate
[9] closed water circuit with tank and temperature display

### Technical data

Centrifugal pump with drive motor
- power consumption: 0,37kW
- speed: 500...3300min$^{-1}$
- max. flow rate: 70L/min
- max. head: 13m

Tank: 20L

Measuring ranges
- pressure (inlet): -1...0bar
- pressure (outlet): 0...1,5bar
- temperature: 0...100°C
- flow rate: 10...140L/min

230V, 50Hz, 1 phase
LxWxH: 1000x630x590mm
Weight: approx. 65kg

### Required for operation

water connection: approx. 100L/h
drain

### Scope of delivery

1 experimental unit
1 set of hoses
1 set of instructional material

# ST 250
## Cavitation

### Learning objectives/experiments

- function of a Venturi nozzle
- pressure as a function of the flow rate
- cavitation processes at different flow rates and pressures

### Description

- **investigation of cavitation processes**
- **visualisation of the formation of vapour bubbles in a Venturi nozzle**

Cavitation refers to the formation of vapour bubbles in flowing fluids due to strong low pressure. As the flow velocity increases, the static pressure of the fluid falls to the vapour pressure and leads to the formation of vapour bubbles. The bubbles are carried along by the flow and implode if, with decreasing velocity, the static pressure rises above the vapour pressure of the fluid.

ST 250 is suitable for the demonstration of cavitation processes using the example of a Venturi nozzle. Pressure energy is converted into kinetic energy and vice versa in the Venturi nozzle. Vapour bubbles form in the narrowest cross-section.

To visualise the flow processes the experimental unit includes a Venturi nozzle made of transparent plastic. There are three pressure measuring points on the Venturi nozzle: at the inlet, at the narrowest point and at the outlet. The input pressure can be adjusted via a pressure reducing valve. The flow rate and the pressures can be adjusted via two ball valves which are located at the inlet and outlet of the pipe system.

The pressure distribution within the Venturi nozzle is shown on three manometers. The flow can be read off a rotameter. The temperature is measured directly upstream of the Venturi nozzle and is displayed on the thermometer.



# ST 250
## Cavitation

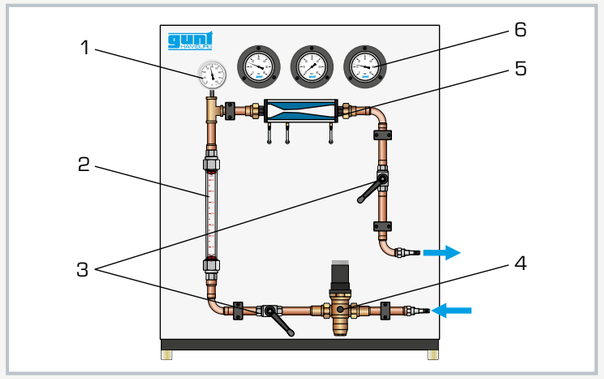


1 thermometer, 2 rotameter, 3 ball valves for flow adjustment, 4 pressure reducing valve, 5 Venturi nozzle, 6 manometer

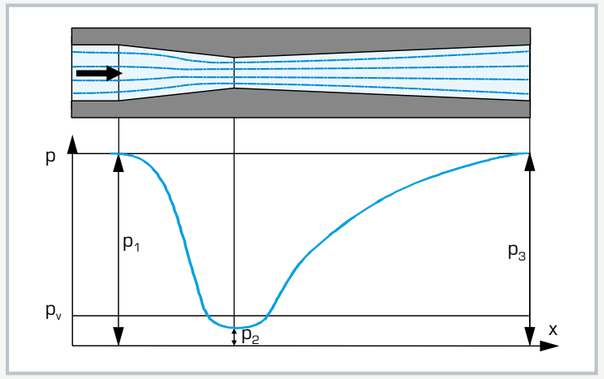


Representation of the pressure curve of a fluid flowing through a Venturi nozzle
p pressure, x distance, $p_1$ pressure at the inlet, $p_2$ pressure at the narrowest cross-section, $p_3$ pressure at the outlet, $p_v$ vapour pressure

### Specification

[1] investigation of cavitation processes in a Venturi nozzle
[2] Venturi nozzle with 3 pressure measuring points
[3] adjustment of the flow rate via ball valves
[4] pressure reducing valve, adjustable
[5] thermometer for measuring the temperature
[6] flow measurement using rotameter
[7] manometer for displaying the pressure curve in the Venturi nozzle

### Technical data

Pressure reducing valve
- 0,5...2bar
- up to 70°C

Transparent Venturi nozzle
- cross-section of flow
  - inner diameter: 18mm
  - contraction: 10,5°
- output cross-section
  - inner diameter: 18mm
  - enlargement: 4°
- narrowest cross-section
  - inner diameter: 3,5mm

Measuring ranges
- pressure: -1...1,5bar
- temperature: 0...60°C
- flow rate: 0...1000L/h

LxWxH: 700x400x930mm
Weight: approx. 30kg

### Required for operation

water connection: 4bar, drain

### Scope of delivery

1 experimental unit
1 set of hoses
1 set of instructional material

# 3 Flow around bodies


| | |
|---|---|
| **Overview** Flow around bodies | 186 |
| **Overview** Various methods for 2D visualisation of stream lines with GUNT equipment | 188 |
| **HM 152** Potential flow | 190 |
| **HM 153** Visualisation of different flows | 192 |
| **HM 133** Visualisation of flow fields | 194 |
| **Overview** HM 132 Vertical visualisation of flow fields | 196 |
| **HM 132** Vertical visualisation of flow fields | 200 |
| **Overview** HM 170 Open wind tunnel | 202 |
| **Overview** HM 170 Selected experiments | 204 |
| **Overview** HM 170 Accessories for the wind tunnel | 206 |
| **HM 170** Open wind tunnel | 210 |
| **HM 170.22** Pressure distribution on an aerofoil NACA 0015 | 212 |
| **HM 170.24** Boundary layer analysis with Pitot tube | 214 |
| **HM 170.28** Wake measurement | 216 |
| **HM 170.52** Fog generator | 218 |
| **HM 170.60** System for data acquisition | 219 |
| **HM 226** Wind tunnel for visualisation of streamlines | 220 |
| **Overview** HM 225 Exchangeable accessories for a wide range of experiments | 222 |
| **Overview** HM 225 Aerodynamics trainer Flow around bodies in air | 224 |
| **HM 225** Aerodynamics trainer | 226 |
| **HM 225.02** Boundary layers | 228 |
| **HM 225.04** Drag forces | 230 |
| **HM 225.06** Coanda effect | 232 |
| **HM 225.08** Visualisation of streamlines | 234 |
| **CE 220** Fluidised bed formation | 236 |
| **HM 136** Flow through packed columns | 238 |

# Flow around bodies

The topic of "flow around bodies" plays a key role in any overall curriculum on technical fluid mechanics. The understanding of flows around any shape of a body is crucial in fluid dynamics and aerodynamics.

Fluid simulations (CFD – Computational Fluid Dynamics) now make it possible to calculate the variety of flow configurations for any shape of a body and the resulting drag by digitally solving complex differential equations and displaying them graphically. Nevertheless, experimental research in the lab on the model remains indispensable for a sound understanding.

GUNT can provide you with a varied selection of equipment for demonstrations, to illustrate these topics clearly and specifically in laboratory experiments.

Our experiment and demonstration apparatus for this field is based on the assumption of incompressible, steady external flow.

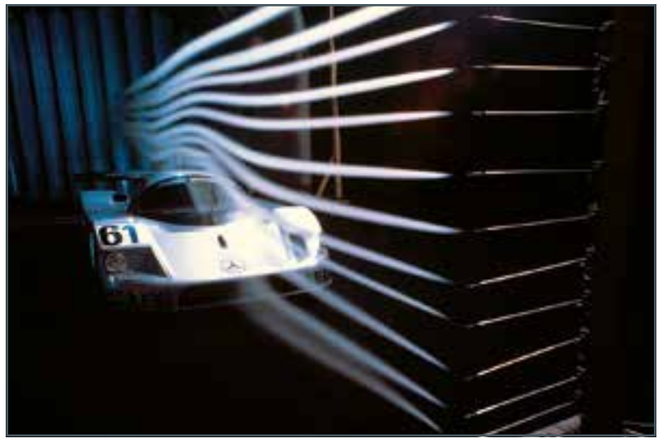

## Forces on vehicles

In vehicles – besides aspects of design and branding – the reduction of resistances, generated by flow around the body, plays a vital role. Therefore vehicles are often tested in wind tunnels. The findings from these experiments are incorporated into vehicle development and optimisation.

A flow-optimised design can reduce road noise and have a favourable effect on fuel consumption. Thus significant progress is made in striving for energy efficiency.

## Flow course in the stator and rotor systems of turbomachines

Basic knowledge of flow around bodies is crucial in structural design. Rotor blades, stator and rotor systems, inlets and outlets, etc. must be designed in a way that operating noise and vibration sensitivity are minimised while maximizing energy use.

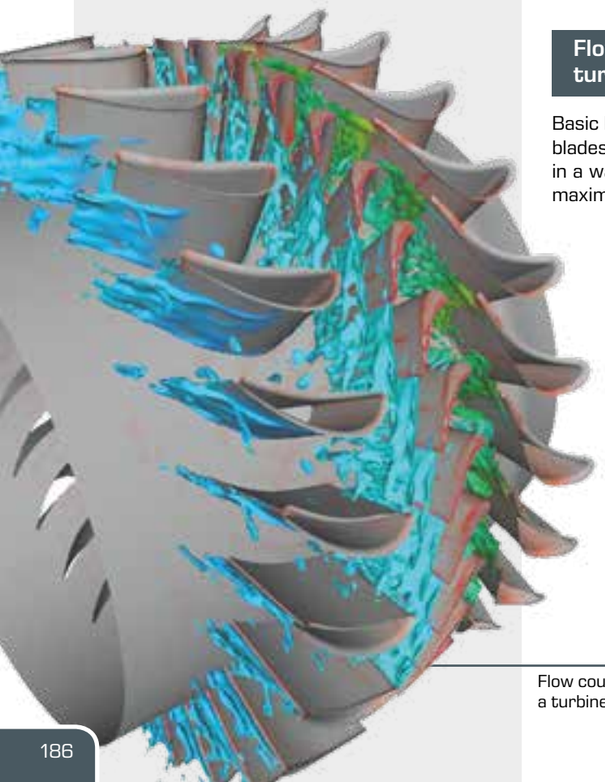

Flow course in a turbine

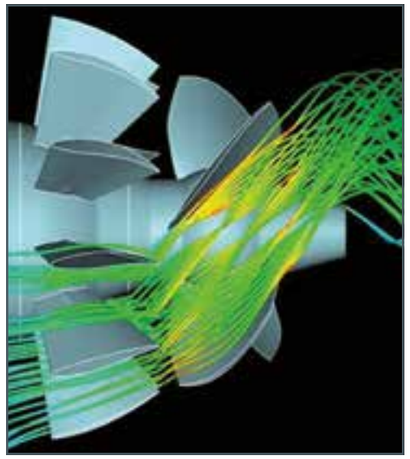

Flow course in the stator and rotor system of a turbine

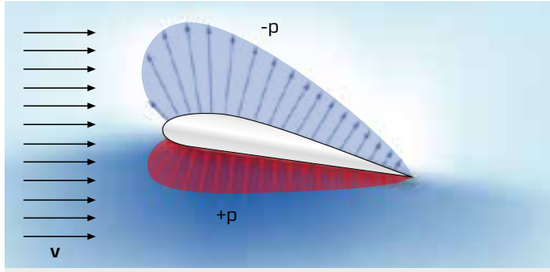


Pressure distribution on an aerofoil

**v** incident flow,
**blue area** low pressure on the top side (suction),
**red area** high pressure on the bottom side

## Forces and pressure curve on aerofoils

Fundamental knowledge about aerofoils is developed by means of wind tunnel experiments. In addition to measuring drag and lift forces, we also offer an instructive experiment for measuring the pressure curve around an aerofoil.

The angle of attack of the aerofoil profile and the average flow velocity can be varied in this experiment.

Boundary layer and flow separation on a plate

Boundary layer and flow separation on an aerofoil and landing flap

## Boundary layers characteristics of different bodies

The understanding of the structure of boundary layers and their influence on the surfaces of the body immersed in a flow is one of the problems of fluid mechanics that can easily be made accessible to students through appropriate, illustrative experiments.

The table shows an abstract from a common university curriculum. GUNT devices cover this content to the greatest extent.

| Learning objectives for the field of flow around bodies | GUNT products |
|---|---|
| Streamlines, flow field | **HM 133, HM 152, HM 153** |
| Pressure/velocity profile of body in a flow | **HM 170, HM 225.02, HM 225.04** |
| **Boundary layers:** laminar and turbulent flow formation, dead wake zone | **HM 170.24, HM 225, HM 225.02** |
| Vehicle dynamics, air forces on vehicles | |
| **Force effect when flowing around bodies:** pressure and frictional resistance | **HM 170, HM 225.04** |
| **Forces on structures under surrounding flow:** the effect of wind on buildings, water flow around foundations and supports | |
| **Aerofoil:** shapes, designs, lift and drag forces as a function of angle of attack and wind velocity | **HM 170, HM 225.04** |
| Flow through series of pipes and tube bundles in heat exchangers | **HM 153, experimental apparatus in catalogue 3: WL 310, WL 314** |

# Various methods for 2D visualisation of stream lines with GUNT equipment

## Using a contrast medium

### HM 153 Visualisation of different flows

- optimum visibility through transparent, illuminated experiment area
- many interchangeable models, for flow around, through or against
- water supply either through closed water circuit or connection to the laboratory supply

### HM 152 Potential flow

- Hele-Shaw cell with screening in the bottom glass panel for optimal observation of the streamlines
- two-dimensional, inviscid potential flows
- influence of sources and sinks on the streamlines
- various models: drag bodies and changes in cross-section

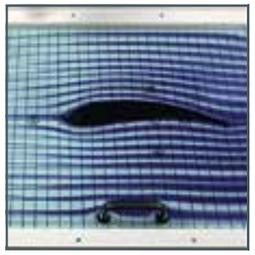

## Using electrolytically generated hydrogen bubbles

### HM 133 Visualisation of flow fields

- illuminated test track for optimal observation of the flow conditions
- experiments with low flow velocity for better observation of flow processes
- visualisation of Karman vortices

### HM 132 Vertical visualisation of flow fields

- visualisation of two-dimensional flows
- in conjunction with a special camera (i.e. PCO Pixelfy) and suitable software (i.e. ImageJ): image processing evaluation of the experiments (particle image velocimetry, particle tracking velocimetry)

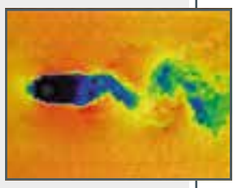

## Using fog

### HM 226 Wind tunnel for visualisation of streamlines

- transparent, illuminated viewing area for optimal observation of streamlines
- streamline field is generated by injecting fog from multiple nozzles
- fog generator is included in the scope of delivery
- various models: drag bodies and changes in cross-section

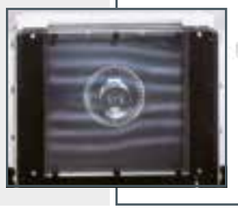

### HM 225 Aerodynamics trainer

- visualisation of streamlines with the HM 225.08 accessory
- homogeneous flow through flow straightener and carefully shaped nozzle contour
- various models: drag bodies and change in cross-section

### HM 170 Open wind tunnel

- experimental section visible from all sides
- the HM 170.52 Fog generator produces highly dense fog, which is injected to the wind tunnel through a lance
- wide range of drag and lift bodies available as options

To demonstrate two-dimensional phenomena in supersonic flow, GUNT provides the HM 172 Supersonic wind tunnel.

# HM 152
## Potential flow

### Description

- **two-dimensional, inviscid potential flow**
- **visualisation of streamlines**
- **flow around different models: drag bodies and changes in cross-section**
- **modelling the flow around bodies by overlaying the parallel flow and sources and / or sinks**
- **sources and sinks, individually or in combination**

The laminar, two-dimensional flow in HM 152 is a good approximation of the flow of ideal fluids: the potential flow. All physical systems described with the Laplace equation can be demonstrated with potential flow. This includes current and thermal flows as well as magnetic flux.

The core element of the HM 152 trainer is a classic Hele-Shaw cell with additional water connections for sources and sinks. The laminar, two-dimensional flow is achieved by water flowing at low velocity in a narrow gap between two parallel glass plates. The parallel flow generated in this way is non-vortical and can be regarded as potential flow.

Sources and sinks are generated via eight water connections in the bottom glass plate. The streamlines are displayed on the glass plate by injecting a contrast medium (ink).

In experiments the flow around bodies is demonstrated by inserting models into the parallel flow. Interchangeable models such as a cylinder, guide vane profile or nozzle contour are included.

To model the flow without models, it is possible to overlay parallel flow, sources, sinks and dipoles as required. This allows the demonstration of the formation of Rankine half-bodies.

The water flow rate and the quantity of contrast medium injected can be adjusted by using valves. The water connections are also activated by valves and can be combined as required.

### Learning objectives/experiments

- visualisation of streamlines in
  - flow around drag bodies: cylinder, guide vane profile, square, rectangle
  - flow through models: nozzle contour, sudden contraction or enlargement
  - flow separation, flow with 90° deflection
- modelling the flow around bodies by overlaying parallel flow and sources and/or sinks
  - formation of Rankine half-bodies
  - demonstration of a dipole
- analogy between potential flow and other physical systems which are described by the Laplace equation



HM 152
Potential flow

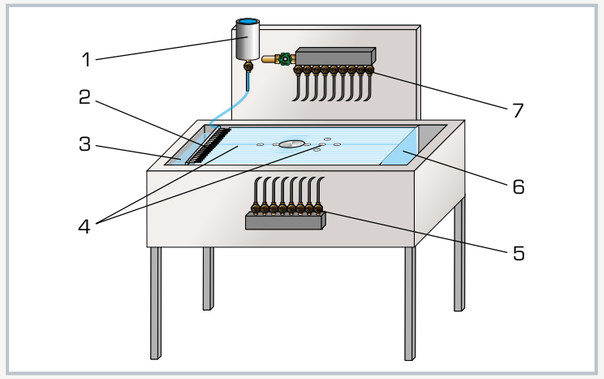


1 contrast medium, 2 nozzles for injecting the contrast medium, 3 water inlet, 4 Hele-Shaw cell with sources/sinks, 5 valves for sinks, 6 water outlet, 7 valves for sources

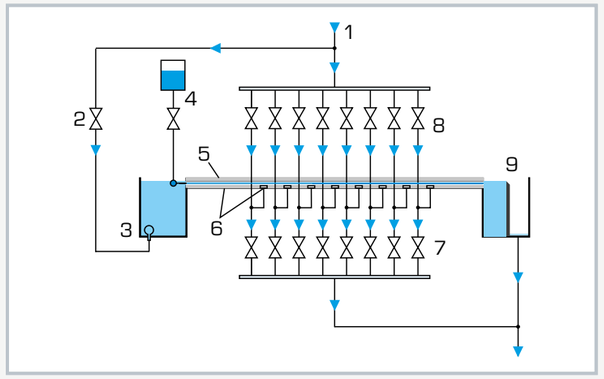


1 water inlet, 2 valve, adjusting the flow velocity, 3 tank, 4 contrast medium, 5 upper glass plate, 6 bottom glass plate with water connections (sources/sinks), 7 valves for sinks, 8 valves for sources, 9 water outlet

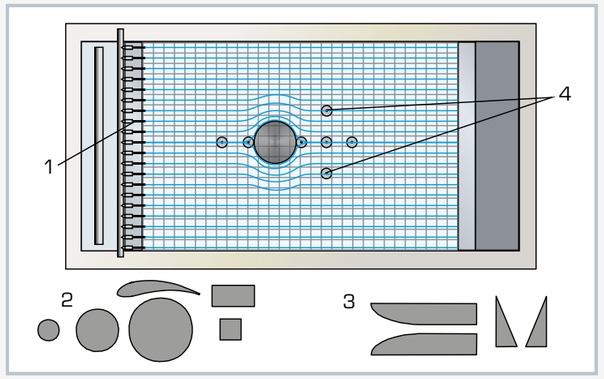


Flow around a cylinder: 1 injection of the contrast medium, 2 drag body, 3 models for changes in cross-section, 4 sources/sinks arranged in a cross shape

### Specification

[1] demonstration of potential flow in a Hele-Shaw cell for visualising streamlines
[2] flow around supplied models: cylinder, square, rectangle, guide vane profile, various models for changes in cross-section
[3] modelling the flow around contours without models by overlaying parallel flow with sources or sinks
[4] water as flowing medium and ink as contrast medium
[5] Hele-Shaw cell made of two glass plates arranged in parallel with narrow gap
[6] upper glass plate, hinged for swapping models
[7] bottom glass plate with cross-shaped water connections for generating sources/sinks, can be combined as required
[8] grid in the bottom glass panel for optimal observation of the streamlines
[9] flow velocity, water inlet and water outlet in sources/sinks as well as dosage of the contrast medium can be adjusted by using valves

### Technical data

2 glass plates, LxW: 910x585mm
- distance between the plates: 5mm
- bottom glass plate with eight water connections for sources/sinks

Models
- 6 drag bodies
- 2 changes in cross-section
- material: rubber
- thickness: 5mm

Injection of the contrast medium (ink)
- 19 nozzles

Tank for contrast medium: 200mL

LxWxH: 1350x700x1380mm
Weight: approx. 119kg

### Required for operation

water connection 300L/h, drain

### Scope of delivery

1 trainer
1 set of models (drag bodies, changes in cross-section)
1L ink
1 set of instructional material

# HM 153
## Visualisation of different flows

The illustration shows a similar unit.

### Description

- **visualisation of streamlines**
- **illuminated flow section**
- **flow over weirs**
- **different models: drag bodies, weirs and changes in cross-section**

In research and training, flow processes are often considered in simplified models, e.g. in pipe flows, open channel drainage processes or the incident flow of structures.

HM 153 can be used to visualise flow around bodies, pipe flows and flow phenomena in open channels. Various models are fixed in the flow section. The streamlines are made visible by using injected ink as a contrast medium. The flow section is illuminated from behind and has a transparent front plate.

Open-channel flow is demonstrated with two weirs. The downstream water level can be adjusted with the aid of another weir. Flow through is shown in three models with change in cross-section and in the model "pipe bundle". Streamlines in flow around bodies are demonstrated on four drag bodies.

HM 153 includes a closed water circuit. Alternatively, the experimental unit can be operated by the laboratory supply.

### Learning objectives/experiments

- streamlines when flowing around different solid drag bodies
- streamlines when flowing through different shaped models
- flow over different weirs



HM 153
Visualisation of different flows

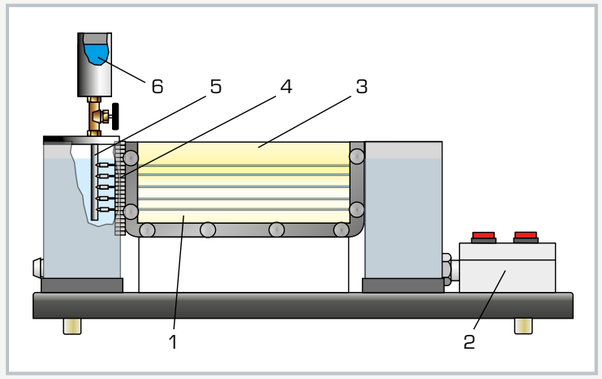


1 flow section, 2 control unit for pump and illumination, 3 transparent front panel, 4 nozzles, 5 distributor for ink, 6 ink reservoir

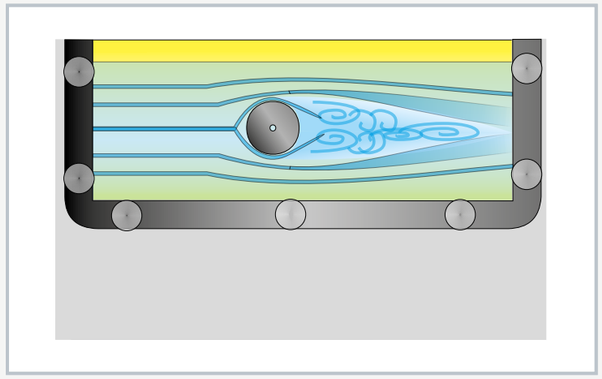

Visualisation of the streamlines on a cylinder and the formation of vortices

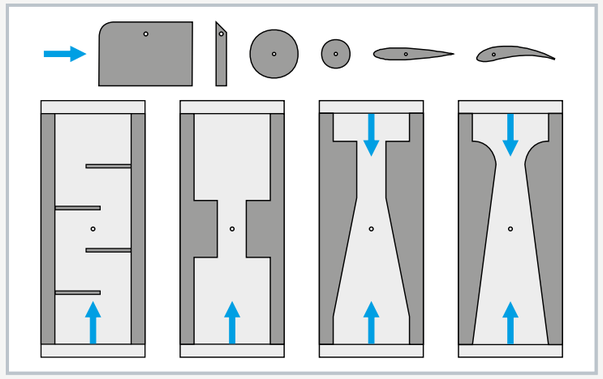

Accessories supplied: set of models with weirs, drag bodies and models to demonstrate flow through; blue: direction of flow

### Specification

[1] experimental unit for visualisation of various flow processes
[2] illuminated flow section with transparent front panel
[3] open-channel flow demonstrated on 2 weirs
[4] flow through demonstrated with 4 differently shaped models
[5] flow around solid bodies demonstrated on four drag bodies
[6] contrast medium: ink
[7] optional operation via laboratory supply or as closed water circuit

### Technical data

Flow section: approx. 5L

Contrast medium: ink

Injection of the contrast medium
- 5 nozzles

Pump
- flow rate: 10L/min
- head: 5,7m

Weirs
- broad-crested
- sharp-crested

Drag body
- 2 cylinder cross-sections
- aerofoil, symmetrical
- aerofoil, asymmetrical

Change in cross-section / flow through
- gradual contraction / sudden enlargement
- sudden contraction / gradual enlargement
- sudden contraction / enlargement
- tube bundle

230V, 50Hz, 1 phase
230V, 60Hz, 1 phase; 120V, 60Hz, 1 phase
UL/CSA optional
LxWxH: 1000x310x680mm
Weight: approx. 25kg

### Required for operation

water connection, drain

### Scope of delivery

1 experimental unit
1 set of models
1 ink (1L)
1 set of instructional material

# HM 133
## Visualisation of flow fields

### Description

- **visualisation of flow fields and streamlines by using electrolytically generated hydrogen bubbles**
- **illuminated experimental section**
- **different models: drag bodies and changes in cross-section**
- **investigations in laminar and turbulent flow**

Fine gas bubbles are perfectly suited to visualising flow fields. Due to Reynolds scaling, many flow processes that occur in air can also be demonstrated by experiments in water.

The experimental unit HM 133 can be used to visualise laminar and turbulent flow processes in a water channel. Hydrogen bubbles are generated electrolytically at a cathode made of thin platinum wire. A stainless steel plate is used as an anode. Small bubbles that detach from the platinum wire are easily carried along by the flow due to their small size.

An interchangeable model is used in the shallow water channel and flow travels around and through it. White LED illumination is located along the experimental section on the walls of the water channel. The indirect illumination results in a high-contrast image.

The experiments run with a low flow velocity. Flow separation and vortex formation are clearly visible. Different drag bodies or changes in cross-sections are used as models, e.g. cylinder, aerofoil profile and rectangle. A flow straightener and a layer of glass spheres ensure a smooth and low-turbulence flow. The power for the electrolysis, its pulse and pause duration and the flow velocity in the water channel can all be adjusted.

### Learning objectives/experiments

- visualisation of two-dimensional flows
- streamline course in flow around and through models
- flow separation
- vortex formation, demonstration of Karman vortices
- qualitative observation of the velocity distribution in laminar and turbulent flow
- analogy to air flow



HM 133
Visualisation of flow fields

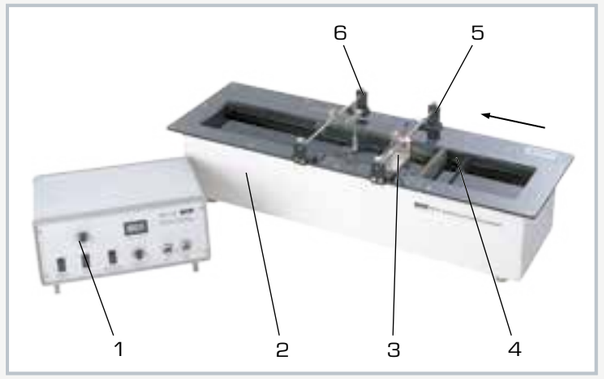


1 display and control unit, 2 water channel with LED illumination along the experimental section, 3 anode, 4 flow straightener, 5 mount for cathode, 6 mount for model; arrow shows the direction of flow

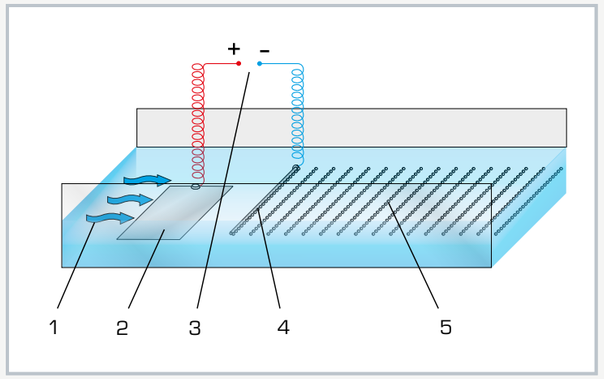


Principle of electrolytic generation of hydrogen bubbles
1 water inlet, 2 anode, 3 power source, 4 cathode, 5 diffusion of bubble fronts (pulsed)

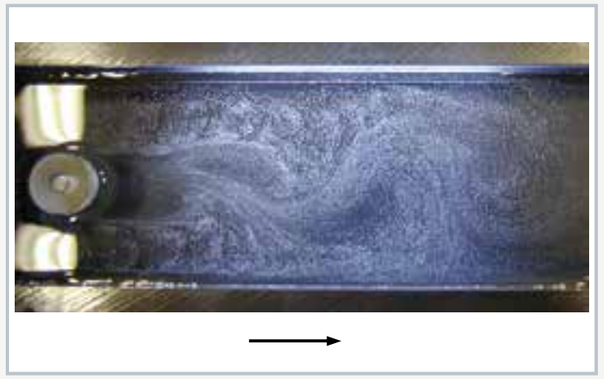

When flowing around a cylinder, Karman vortices form behind the model; arrow shows the direction of flow

### Specification

[1] visualisation of flow fields by using electrolytically generated hydrogen bubbles
[2] platinum wire as cathode and stainless steel plate as anode for electrolysis
[3] shallow water channel fitted with indirect LED illumination along the experimental section
[4] various models are included: aerofoil, rectangle, straight plate, curved plate, cylinder (various sizes), various models for changes in cross-section
[5] flow straightener and glass spheres ensure consistent and low-turbulence flow
[6] different flow velocities via variable-speed circulating pump
[7] setting power (with display), pulse and pause duration of the power and the flow velocity in the water channel

### Technical data

Pump with adjustable speed
- max. flow rate: 20L/min

Bubble generator
- current: 0...200mA
- pause: 8,4...1800ms
- pulse: 8,4...1800ms
- 3 cathodes with platinum wire
  - Ø 0,2mm
  - length 30, 50, 75mm
- anode, stainless steel plate, L-shaped

Water channel: approx. 6L
Experimental section: LxWxH: 550x150x50mm
Illumination: white LEDs on the side walls of the water channel

230V, 50Hz, 1 phase
230V, 60Hz, 1 phase; 120V, 60Hz, 1 phase
UL/CSA optional
LxWxH: 900x300x220mm (experimental unit)
LxWxH: 410x400x170mm (display and control unit)
Weight: approx. 24kg

### Scope of delivery

1 experimental unit
1 display and control unit
3 cathodes
1 set of models (drag bodies, changes in cross section)
1 set of instructional material

# HM 132 Vertical visualisation of flow fields

Patented

Fine gas bubbles are perfectly suited to visualising flow fields. Due to analogies, many flow processes that occur in air can also be demonstrated by experiments in water.

The trainer consists of a vertical experimental section in which an interchangeable model is inserted. Water flows from bottom to top through the experimental section. Electrolytically generated hydrogen bubbles rise with the flow, flow around the model and visualise the flow.

## Movement detection

Flows can be visualized by floating particles or gas bubbles. These particles or gas bubbles must be so small that they follow the flow without distortion.

For good visualisation of the flow fields it is important to have a good contrast between the fluid and the particles or gas bubbles. As gas bubbles reflect the light well owing to their spherical shape this allows for an excellent contrast.

Electrolytically produced hydrogen bubbles as contrast medium.

## Learning objectives/experiments

- streamline course in flow around and through models
- flow separation
- vortex formation, demonstration of Karman vortices
- qualitative observation of the velocity distribution in laminar flow
- analogy to air flow
- in conjunction with a special camera (i.e. PCO Pixelfy) and suitable software (i.e. ImageJ):
  - image processing evaluation of the experiments (particle image velocimetry, particle tracking velocimetry)

Optional accessory: high-sensitivity camera

# HM 132 Vertical visualisation of flow fields

## Working with exposure times $t_E$

There are various possibilities for detecting a movement process. Exposure time controls the duration of a recording. The intensity and duration of the exposure determines how the movement processes in the photograph are displayed.

Short $t_E$: Standing image

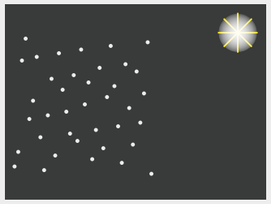

Long $t_E$: Motion blur occurs

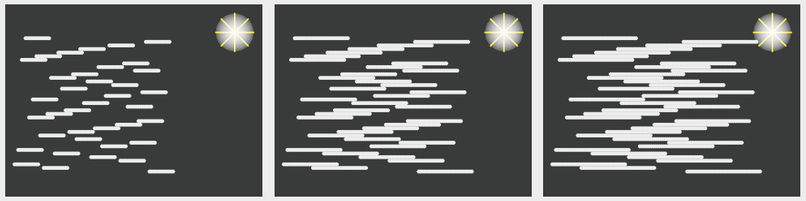

**Exposure time $t_E$** variable. **Lighting** constant.

**v** = 7 cm/s

$t_E$ = 1/200 s

Snapshot with single bubbles

$t_E$ = 1/5 s

Clarification of vortex structures

$t_E$ = 1/1 s

Visualization of the affected area

With a camera with adjustable exposure time $t_E$, the flow state can be kept as an image in a simple manner. Individual bubbles can smear to lines. If the lines are still clearly separated, the velocity of the bubbles can be calculated by reproduction scale, length/width of lines, and exposure time.

## Particle Tracking Velocimetry – PTV

Motion blur gets directional information by decreasing illumination intensity

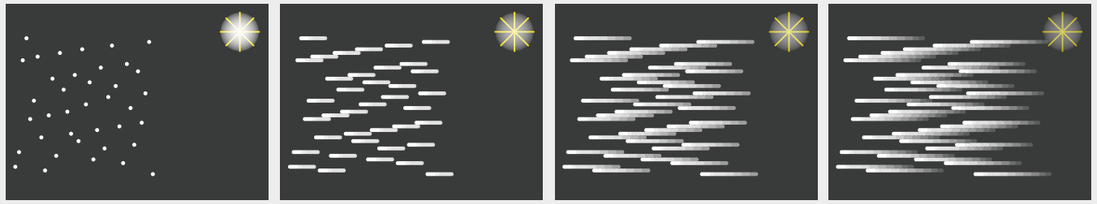

**Exposure time $t_E$** variabel. **Lighting** dimming.

By dimming the illumination within the exposure time, the bubbles produce lines in the image. The fading of the lines shows the flow direction. The length of the lines is proportional to the velocity.

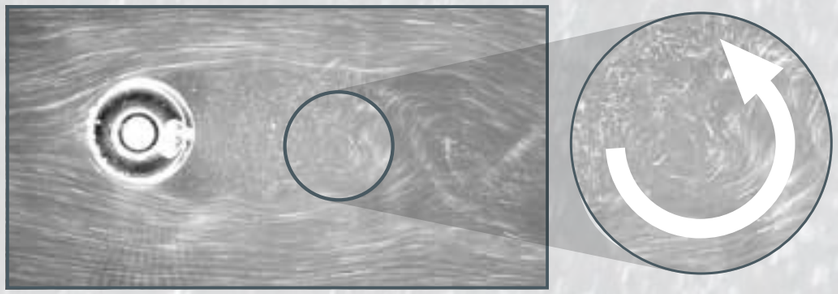

**v** = 7 cm/s

## Particle Image Velocimetry – PIV

Double image. Usually applied in two image files.

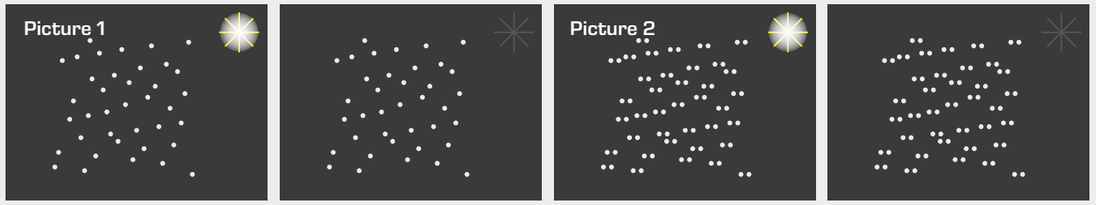


**Exposure time $t_E$** short, double. **Lighting** short, intense.

Software compares two images taken one after the other, quickly. The direction of motion and magnitude of the bubble patterns are calculated. With the reproduction scale and the time offset between the images, the speed can be determined.

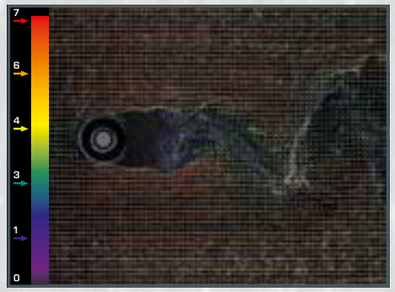


Image created with ImageJ, PIV

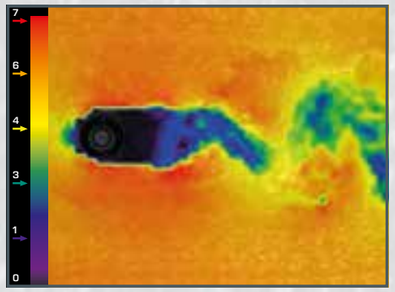


Image created with ImageJ, PIV

# HM 132
## Vertical visualisation of flow fields

### Description

- **visualisation of flow fields and streamlines around models using electrolytically generated hydrogen bubbles**
- **illuminated vertical experimental section**
- **investigations in laminar flow**

Fine gas bubbles are perfectly suited to visualising flow fields. Due to analogies, many flow processes that occur in air can also be demonstrated by experiments in water.

The trainer consists of a vertical experimental section in which an interchangeable model is inserted. Water flows from bottom to top through the experimental section. Electrolytically generated hydrogen bubbles rise with the flow, flow around the model and visualise the flow.

Different models are available: drag bodies (e.g. aerofoils and cylinders) or changes in cross-sections. The length of the experimental section enables for a long wake, where, for example, vortex streets form completely. The black background and the lateral illumination ensure optimal observation. The model can be inserted in two different positions.

A stabilistation tank with a flow straightener placed upstream of the experimental section generates low-turbulence flow. The experiments run with a low flow velocity. Flow separation and vortex formation are clearly visible. The flow velocity is adjusted by a valve.

Hydrogen bubbles are generated electrolytically at a cathode made of thin platinum wire. The frame of the experimental section is used as an anode. The platinum wire can be inserted into different positions. Cathode current, its pulse and pause duration can be adjusted.

Cathode current and flow velocity are digitally displayed at the switch cabinet.

Image processing evaluation of the experiments (particle image velocimetry, particle tracking velocimetry) is possible using a special camera (i.e. PCO Pixelfy) and suitable software (i.e. ImageJ).

### Learning objectives/experiments

- visualisation of two-dimensional flows
- streamline course in flow around and through models
- flow separation
- vortex formation, demonstration of Karman vortices
- qualitative observation of the velocity distribution in laminar flow
- analogy to air flow

- in conjunction with a special camera (i.e. PCO Pixelfy) and suitable software (i.e. ImageJ):
  - ▸ image processing evaluation of the experiments (particle image velocimetry, particle tracking velocimetry)



HM 132
Vertical visualisation of flow fields

1 storage tank, 2 stabilisation tank with nozzle, 3 pump, 4 flow meter (indirect measurement of flow velocity), 5 illuminated experimental section with inserted model, 6 degassing tank, 7 valve to adjust the flow velocity, 8 switch cabinet with display and control elements

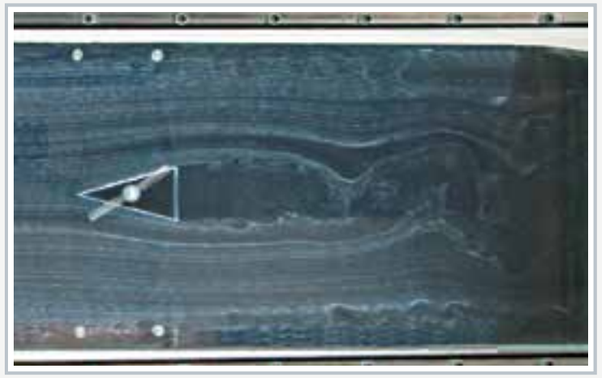

Flow around a triangle; flow direction from left to right (illustration rotated by 90°)

### Specification

[1] electrolytically generated hydrogen bubbles visualise flow fields of different models
[2] closed water circuit with experimental section, storage tank, pump, valve to adjust the flow velocity
[3] vertical experimental section with black background, LED illumination on both sides and 2 insert positions for the model
[4] supplied models: 2 aerofoils, triangle, semicircle, hollow hemisphere, 2 cylinders (different sizes), 2 models for changes in cross-section
[5] low-turbulence flow using stabilisation tank with flow straightener
[6] bubble generator: platinum wire as cathode and frame of experimental section as anode
[7] cathode can be inserted in different positions
[8] setting cathode current, pulse and pause duration
[9] switch cabinet with displays for cathode current and flow velocity

### Technical data

Pump, 3 stages
- max. flow rate: 9,7m³/h
- max. head: 12m
- power consumption: 400W

Storage tank: approx. 75L

Experimental section
- LxH: 300x860mm, W=49mm

Bubble generator
- current: 0...2A
- platinum wire as cathode

Measuring ranges
- flow velocity: 0...13,3cm/s
- current: 0...2000mA
- temperature: 0...100°C (water)

230V, 50Hz, 1 phase
230V, 60Hz, 1 phase; 120V, 60Hz, 1 phase
UL/CSA optional
LxWxH: 1850x800x1990mm
Weight: approx. 260kg

### Scope of delivery

1 trainer
1 set of models
1 set of accessories
1 storage system with foam inlay
1 set of instructional material

# HM 170 Open wind tunnel

GUNT offers an "Eiffel" type open wind tunnel as a classic experimental plant in the field of flow around bodies.

The flow medium of air is brought up to the desired velocity by a fan and flows around the model being studied in a measuring section. Additional experiments, such as investigation of the boundary layer or pressure distribution of drag bodies immersed in a flow are available as options.

The new design of the open wind tunnel HM 170

HM 170 with optional accessories: different drag bodies and HM 170.50 16 tube manometers

Training at the HM 170 Open wind tunnel at the Technical College for Aeronautical Engineering in Hamburg (Germany)

Measuring lift and drag forces as a function of the angle of attack of an aerofoil with flap and slot

Measuring lift and drag forces on the streamlined body with the two-component force sensor

Pressure distribution on an aerofoil immersed in a flow

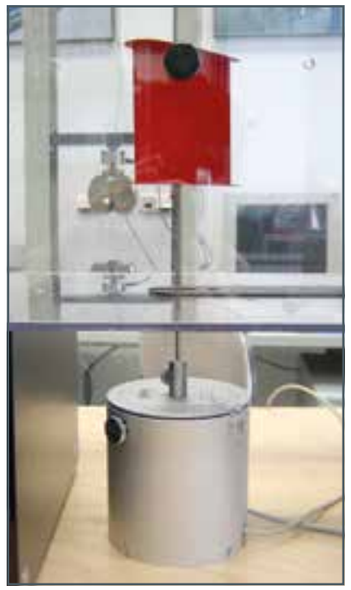

Measuring lift and drag forces and moment on the aerofoil drag body with the three-component force sensor HM 170.40

# HM 170
# Selected experiments

## Flow around various drag and lift bodies HM 170.01 – HM 170.14

- determining drag and lift coefficients
- two-component force sensor for measuring drag and lift forces included in HM 170
- visualisation of streamlines by using fog

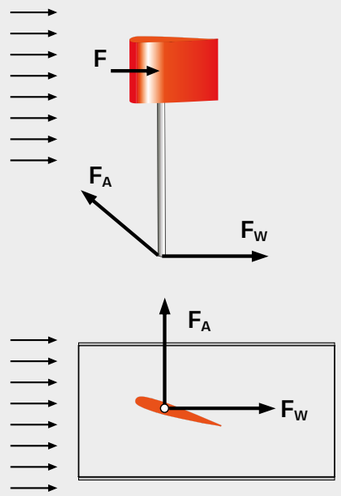


Force measurement on the drag body

$F_A$ lift force, $F_W$ drag

## Demonstration of flutter

**HM 170.20 Airfoil, spring-mounted**

- demonstrate flutter (self-excited vibrations)
- natural oscillation behaviour can be influenced by different spring settings

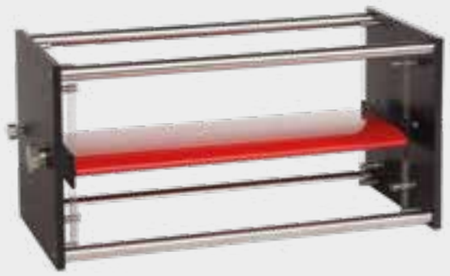

Air flows along an elastic system. Motion-controlled flow forces can cause vibrations with significant amplitudes in the elastic system. This instability phenomenon is called flutter. Flutter is crucial in the design of aircraft, bridges, chimneys and high-voltage power lines. This model is used to demonstrate the aerodynamic excitation of vibrations and instability. By using a stroboscope it is possible to observe the natural oscillation of the wing.

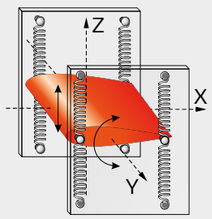


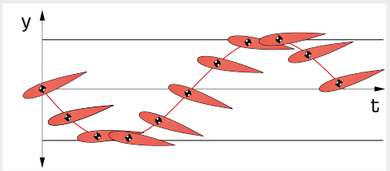


Flutter shown over time

## Pressure distribution at the perimeter of a cylinder immersed in a flow

**HM 170.23 Pressure distribution on a cylinder**

- record pressure distribution on the perimeter of the cylinder
- measuring the static pressure
- each pressure measuring point is equipped with a hose connection

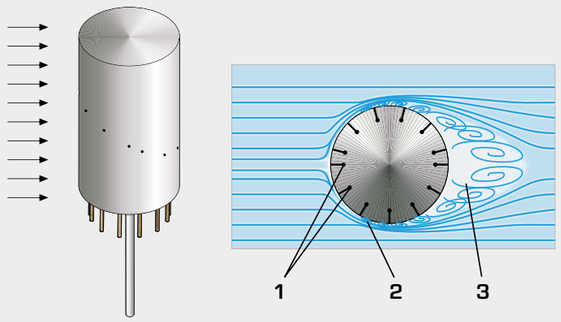


**1** measuring point, **2** flow separation, **3** turbulence

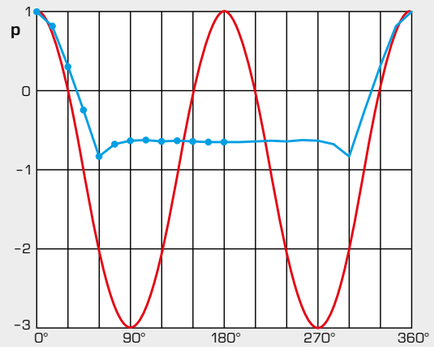


Comparison between measured and ideal pressure distribution when flowing around a cylinder

ideal pressure distribution (frictionless),
measured pressure distribution

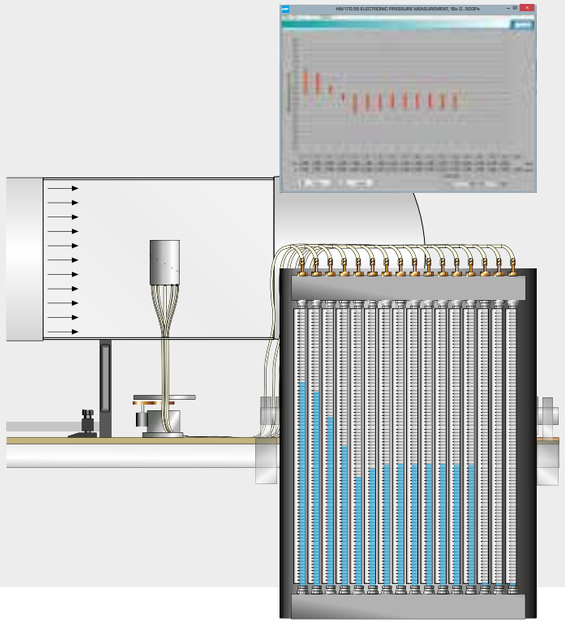

**In conjunction with the electronic pressure measurement HM 170.55:**

- recording and display of the pressure distribution on a PC
- saving of measured values

**In conjunction with the HM 170.50 16 tube manometers:**

- recording the pressure distribution
- particularly clear display of the pressure distribution by the simultaneous measurement of all pressure measuring points with the tube manometers HM 170.50

# HM 170
# Accessories for the wind tunnel

**HM 170.01**
**Drag body sphere**

diameter: 80 mm

**HM 170.02**
**Drag body hemisphere**

diameter: 80 mm

**HM 170.03**
**Drag body circular disc**

diameter: 80 mm

**HM 170.04**
**Drag body circular ring**

outer diameter: 113 mm
inner diameter: 56,5 mm

**HM 170.05**
**Drag body square plate**
L x W: 71 x 71 mm

**HM 170.12**
**Lift body square plate**
L x W: 100 x 100 mm

**HM 170.09**
**Lift body aerofoil**

Aerofoil profile NACA 0015
L x W x H: 100 x 100 x 15 mm

additional aerofoil profiles available:
**HM 170.13** NACA 54118
L x W x H: 100 x 100 x 19,65 mm
**HM 170.14** NACA 4415
L x W x H: 100 x 100 x 15,5 mm

**HM 170.06**
**Lift body flag**

L x W: 100 x 100 mm

**HM 170.07**
**Drag body cylinder**

height: 100 mm
diameter: 50 mm

**HM 170.08**
**Drag body streamlined shape**

length: 240 mm
diameter: 60 mm

**HM 170.10**
**Drag body paraboloid**

length: 90 mm
diameter: 80 mm

**HM 170.11**
**Drag body concave shape**

length: 68,65 mm
diameter: 80 mm

**HM 170.21**
**Aerofoil with slat and slot flap**

Aerofoil profile NACA 0015
L x W x H: 100 x 100 x 15 mm

**HM 170.22**
**Pressure distribution on an aerofoil**
Aerofoil profile NACA 0015
L x W x H: 100 x 60 x 15 mm
- recording the pressure curve
- measuring the lift force

additional aerofoil profiles available:
**HM 170.26** NACA 54118
L x W x H: 100 x 60 x 19,65 mm
**HM 170.27** NACA 4415
L x W x H: 100 x 60 x 15,5 mm

**HM 170.23**
**Pressure distribution on a cylinder**

height: 75,5 mm
diameter: 50 mm

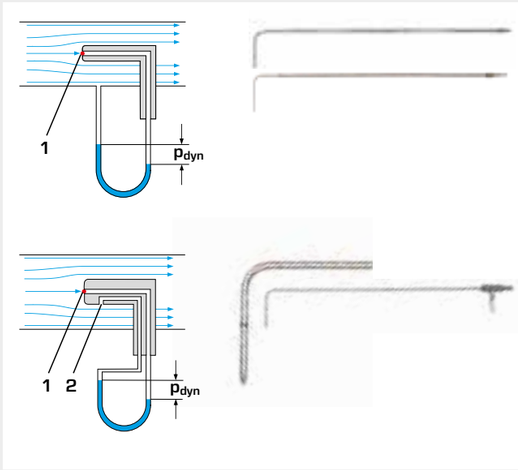


**HM 170.31 Pitot tube**
outer diameter: 4 mm

**HM 170.32 Pitot tube, small**
outer diameter: 2 mm

Determining the total pressure:

**1** stagnation point
The pressure in the stagnation point is equal to the total pressure

**HM 170.33 Pitotstatic tube**
outer diameter: 3 mm

Determining the dynamic pressure:

**1** stagnation point, **2** measuring point for static pressure
The difference between total and static pressure gives the dynamic pressure

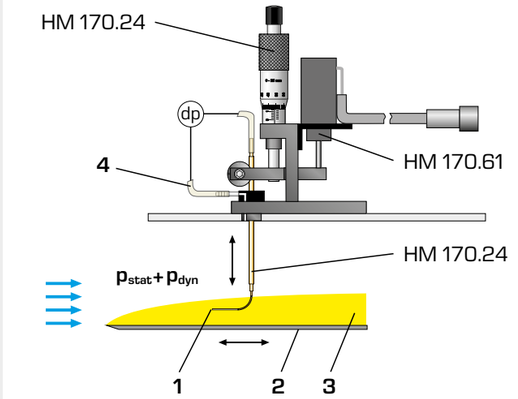


**HM 170.24 Boundary layer analysis with Pitot tube**
Two plates, rough and smooth, L x W x H = 279 x 250 x 3 mm

- vertically movable Pitot tube measures the pressures at various distances from the plate surface
- horizontally movable plate for recording pressures along the flow
- displaying measured values on the PC using HM 170.60 System for data acquisition and HM 170.61 Electronic displacement measurement

Measuring pressures:

**1** stagnation point at the Pitot tube (total pressure), **2** flat plate, **3** boundary layer, **4** measuring point for static pressure, **dp** differential pressure measurement

**HM 170.61 Electronic displacement measurement**

Displacement measuring range: 0...10 mm

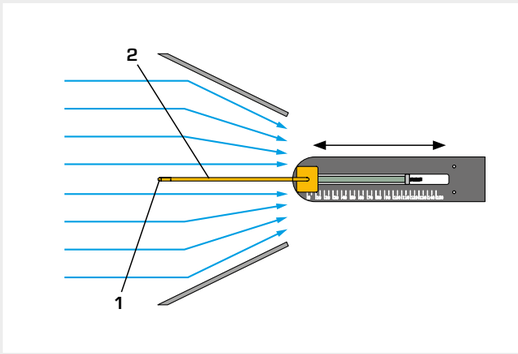


**HM 170.25 Model "Bernoulli"**
Air inlet: 292 mm, air outlet: 146 mm,
opening angle 52°, Pitotstatic tube, outer diameter: 4 mm

- horizontally movable Pitotstatic tube
- wedge-shaped inserts forming a measuring section whose cross-section steadily narrows

Measuring pressures:

**1** stagnation point at the Pitotstatic tube (total pressure),
**2** Pitotstatic tube

# HM 170
# Accessories for the wind tunnel

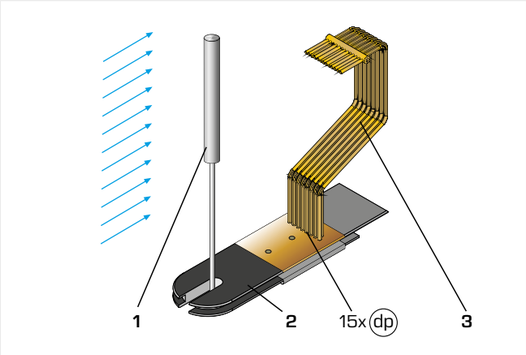


**HM 170.28 Wake measurement**
Cylinder: D x H: 20 x 100 mm
Wake rake consists of 15 Pitot tubes,
outer diameter: 2 mm,
distance between the Pitot tubes: 3 mm

- display of measured values on tube manometers HM 170.50 or on the PC using HM 170.55 Electronic pressure measurement

Measuring pressures:

**1** cylinder,
**2** bracket,
**3** wake rake,
**dp** differential pressure measurement

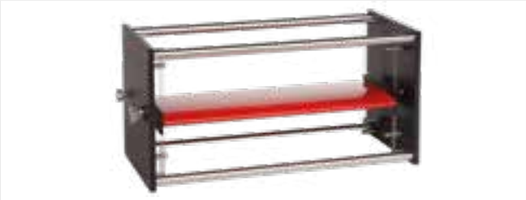

**HM 170.20 Airfoil, spring-mounted**
Aerofoil profile NACA 0015
L x W x H: 200 x 100 x 15 mm

- transverse rigidity: 216 N/m
- torsion rigidity: 0,07...0,28 Nm/rad

**HM 170.53 Differential pressure manometer**

- differential pressure: 0...5 mbar
- graduation: 0,1 mbar

**HM 170.50 16 tube manometers**
L x W x H: 670 x 220 x 750 mm

- manometer inclination up to max. 1/10
- max. 600 mm WC
- height-adjustable manometer
- individual zero points can be set

The tube manometer operates on the principle of communicating tubes

**HM 170.52 Fog generator**
L x W x H: 350 x 500 x 300 mm

- power consumption: 500 W

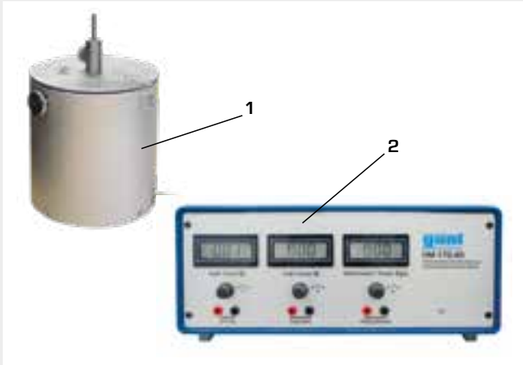


**HM 170.40 Three-component force sensor**
L x W x H: 370 x 315 x 160 mm (measuring amplifier)
D x H: 115 x 150 mm (force sensor)

- measuring amplifier with connections for forces and moment
- connection to HM 170.60 possible
- display of drag, lift and moment

Measuring ranges
- drag: ±4 N
- lift: ±4 N
- moment: ±0,5 Nm
- angle: ±180°

**1** force sensor, **2** measuring amplifier

**HM 170.55 Electronic pressure measurement for HM 170**
L x W x H: 370 x 315 x 160 mm

- 18 inputs, ±5 mbar
- CD with GUNT software included
- data acquisition via USB under Windows

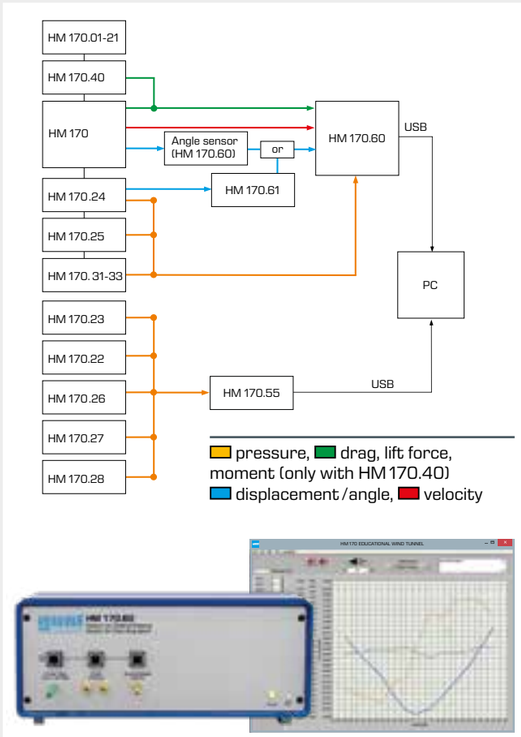


**HM 170.60 System for data acquisition**
L x W x H: 360 x 330 x 160 mm (interface module)

- CD with GUNT software included
- data acquisition via USB under Windows
- angle sensor

Measuring ranges
- displacement: 0...10 mm
- angle: ±180°
- differential pressure: ±5 mbar
- velocity: 0...28 m/s
- drag: ±4 N
- lift: ±4 N
- moment: ±0,5 Nm
  (only for HM 170.40 Three-component force sensor)

# HM 170
## Open wind tunnel

### Description

- **open wind tunnel for a variety of aerodynamic experiments**
- **homogeneous flow through the flow straightener and special nozzle contour**
- **transparent measuring section**

A wind tunnel is the classic experiment system for aerodynamic flow experiments. The model being studied remains at rest while the flow medium is set in motion, and thus the desired flow around the model is generated.

HM 170 is an "Eiffel" type open wind tunnel used to demonstrate and measure the aerodynamic properties of various models. For this purpose, air is drawn in from the environment and accelerated. The air flows around a model, such as an aerofoil, in a measuring section. The air is then decelerated in a diffuser and pumped back into the open by a fan.

The carefully designed nozzle contour and a flow straightener ensure a uniform velocity distribution with little turbulence in the closed measuring section. The flow cross-section of the measuring section is square.

The built-in axial fan with outlet guide vane system and a variable-speed drive is characterised by an energy-efficient operation at high efficiency. Air velocities of up to 28m/s can be reached in this open wind tunnel. The trainer is equipped with an electronic two-component force sensor. Lift and drag are detected and displayed digitally. The air velocity in the measuring section is displayed on the inclined tube manometer. The tube manometers HM 170.50 or the electronic pressure measurement HM 170.55 are recommended for measuring the pressure distribution on bodies.

By using the system for data acquisition HM 170.60, the measured values for velocity, forces, moment, displacement/angle, and differential pressure can be transferred to a PC where they can be analysed with the software.

Extensive accessories allow a variety of experiments, for example lift measurements, pressure distributions, boundary layer analysis or visualisation of streamlines.

### Learning objectives/experiments

- experiments with accessories
  - determine drag and lift coefficients for different models
  - pressure distribution on bodies immersed in a flow
  - boundary layer analysis
  - investigation of flutter
  - wake measurement
- in conjunction with the fog generator HM 170.52
  - visualisation of streamlines



# HM 170
## Open wind tunnel

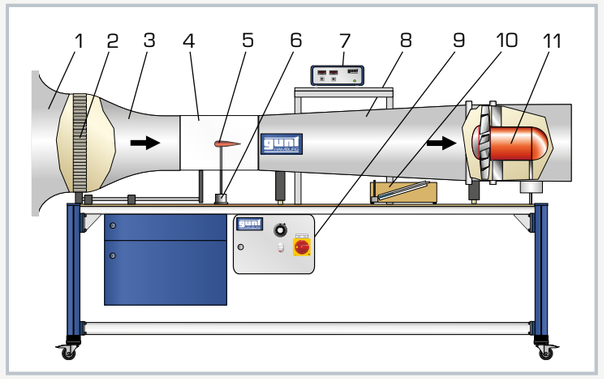


1 inlet contour, 2 flow straightener, 3 nozzle, 4 measuring section, 5 model, 6 force sensor, 7 display and control unit, 8 diffuser, 9 switch cabinet, 10 inclined tube manometer, 11 axial fan

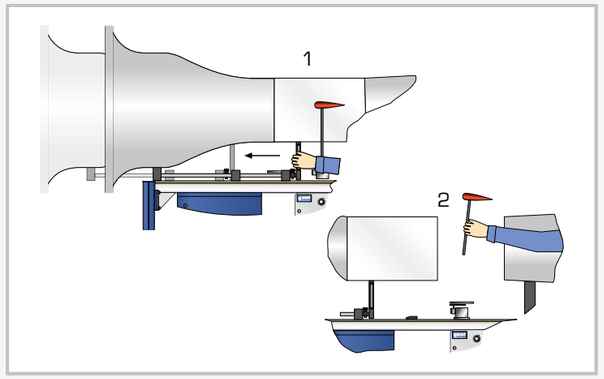


Simple exchange of models: step 1 open lock and slide back measuring section, step 2 remove model

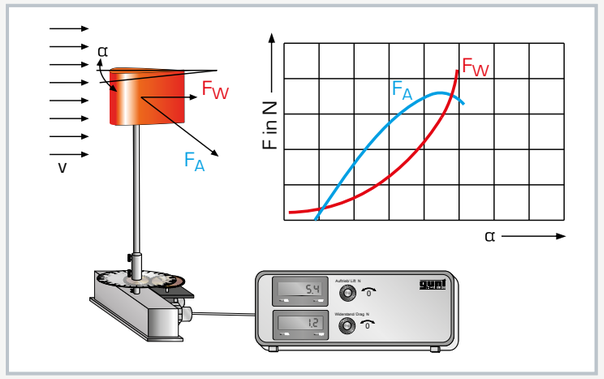


Measurement of lift and drag on an aerofoil as a function of angle of attack
blue: lift force $F_A$, red: drag $F_W$, α angle of attack

### Specification

[1] experiments from the field of aerodynamics and fluid mechanics with an "Eiffel" type wind tunnel
[2] wide range of accessories available
[3] transparent, closed measuring section
[4] inlet contour, nozzle and diffuser made of GRP
[5] variable-speed fan motor for energy-efficient operation
[6] flow straightener reduces turbulence
[7] electronic two-component force sensor for measuring the flow forces
[8] inclined tube manometer for displaying the air velocity
[9] digital display of drag and lift
[10] display of measured values for velocity, forces, moment, displacement/angle, and differential pressure using system for data acquisition HM 170.60

### Technical data

Measuring section
- flow cross-section WxH: 292x292mm
- length: 420mm
- wind velocity: 3,1...28m/s

Axial fan
- power consumption: 2,2kW

Measuring ranges
- force:
  - lift: ±4N
  - drag: ±4N
- velocity: 3,1...28m/s
- angle: ±180°

230V, 50Hz, 1 phase
230V, 60Hz, 1 phase; 230V, 60Hz, 3 phases
UL/CSA optional
LxWxH: 2870x890x1540mm
Weight: approx. 250kg

### Scope of delivery

1 trainer
1 set of instructional material

# HM 170.22
## Pressure distribution on an aerofoil NACA 0015

### Learning objectives/experiments

- record pressure distribution on an aerofoil immersed in a flow
  - as a function of the angle of attack

### Description

- **pressure distribution on an aerofoil immersed in a flow**
- **experiments with different aerofoil angles of attack**
- **aerofoil profile NACA 0015**

Measuring the pressure distribution around an aerofoil profile immersed in a flow teaches students the fundamental knowledge for developing effective lift on the aerofoil. In order for lift to occur on a body immersed in a flow, there must be low pressure on the underside of the body and high pressure on the upper side. The pressure distribution on a body immersed in a flow is clearly demonstrated with this experiment.

HM 170.22 with the airfoil profile NACA 0015 – used in the wind tunnel HM 170 – allows the pressure distribution to be recorded. As further aerofoil profiles are optionally available NACA 54118 (HM 170.26) and NACA 4415 (HM 170.27).

The aerofoil is used in the wind tunnel's force sensor. The angle of attack is varied by rotating the mount. The surface of the aerofoil is fitted with measuring holes, which are arranged so that interaction is virtually eliminated. Each measuring point is fitted with a hose connection. The aerofoil is enclosed by two side panels to prevent secondary flows.

The static pressures are displayed on the tube manometers HM 170.50 or in the electronic pressure measurement HM 170.55.



HM 170.22
Pressure distribution on an aerofoil NACA 0015

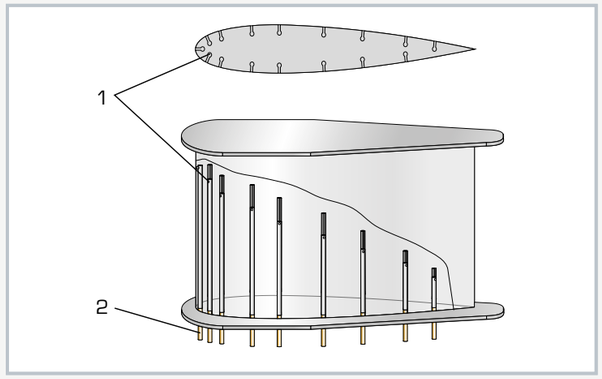


1 measuring point, 2 hose connection

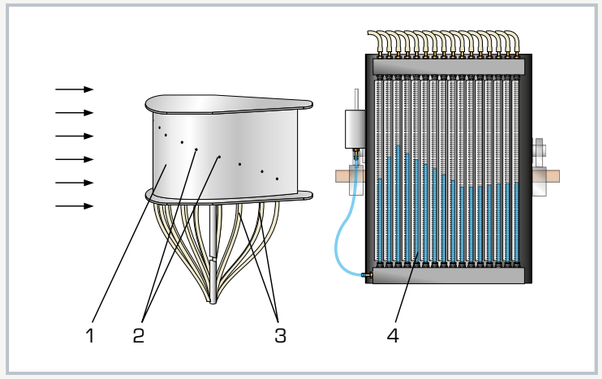


Experimental setup with tube manometer: 1 aerofoil, 2 measuring point, 3 measuring hose, 4 HM 170.50 tube manometer

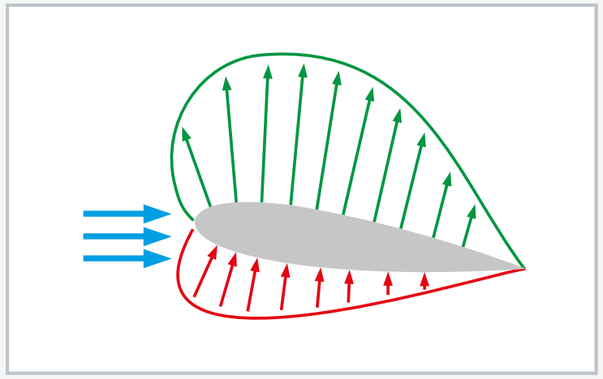

Pressure distribution on an aerofoil
green: low pressure, red: high pressure, blue: incident flow

### Specification

[1] determining the pressure distribution on an aerofoil immersed in a flow
[2] accessory for the wind tunnel HM 170
[3] aerofoil profile NACA 0015
[4] 16 measuring points with hose connections
[5] display of the static pressures on the tube manometers HM 170.50 or in the electronic pressure measurement HM 170.55
[6] further aerofoil profiles available: HM 170.26, NACA 54118, LxBxH: 100x60x19,65mm and HM 170.27, NACA 4415, LxBxH: 100x60x15,5mm

### Technical data

Aerofoil
- profile: NACA 0015, symmetrical
- LxWxH: 100x60x15mm

LxWxH: 115x30x270mm
Weight: approx. ca. 0,6kg

### Scope of delivery

1 aerofoil
1 set of hoses
1 set of instructional material

# HM 170.24
## Boundary layer analysis with Pitot tube

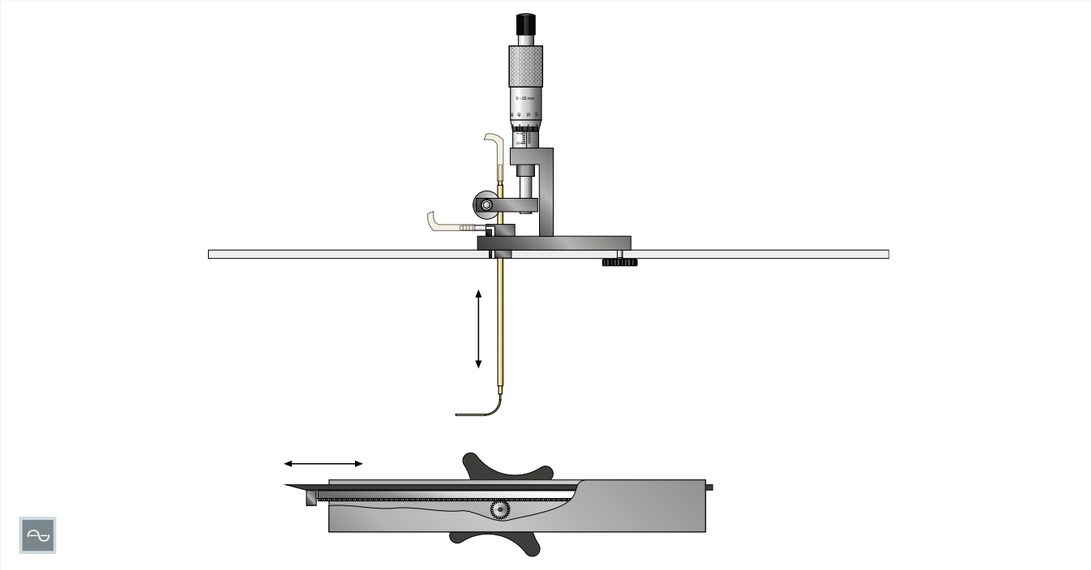

### Description

- **investigation of the boundary layer on a flat plate with flow along the plate**
- **two plates with different surfaces**
- **Pitot tube for measuring the total pressure**

During incident flow of bodies fluids such as air "stick" to the surface of the body and form the so-called boundary layer. The kind of flow within the boundary layer – laminar or turbulent – significantly affects the drag. The findings from studying the boundary layer are taken into consideration when designing aerofoils (aircraft construction), turbine blades (turbine construction) and hull, rudder and propeller blades (shipbuilding).

The HM 170.24 experimental unit – used in the wind tunnel HM 170 – allows the boundary layer on a flat plate to be studied. For this purpose, the plate is inserted into the measuring section of the wind tunnel. The air flows along the plate, parallel to the surface. Two plates with different surface roughnesses are available to demonstrate the effect of surface conditions on the boundary layer.

A vertically movable Pitot tube, adjusted using a micrometer screw, measures the total pressures at various distances from the plate surface. The plate can be moved horizontally, to enable the recording of total pressures along the flow. An additional measuring point measures the static pressure. Both measuring points are connected to a manometer. The velocity can then be calculated from the displayed dynamic pressure. To indicate the pressure, the following units are optionally available: inclined tube manometer included in HM 170, differential pressure manometer HM 170.53, electronic pressure measurement HM 170.55 or system for data acquisition HM 170.60.

The measured values for the dynamic pressure depending on the distance of the Pitot tube to plate front edge can be displayed graphically by using the system for data acquisition HM 170.60 and the electronic displacement measurement HM 170.61.

### Learning objectives/experiments

- measure total pressure with Pitot tube
- measure static pressure
- determine velocity via dynamic pressure
- study the vertical velocity profile at the measuring point
- study the boundary layer thickness
- influence of surface roughness on the boundary layer



HM 170.24
Boundary layer analysis with Pitot tube

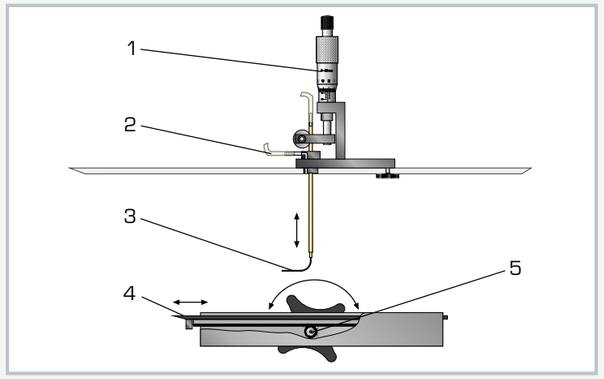


1 micrometer screw for vertical adjustment of the Pitot tube, 2 measuring point for static pressure, 3 Pitot tube, 4 plate, 5 toothed rack with hand wheel for moving the plate horizontally

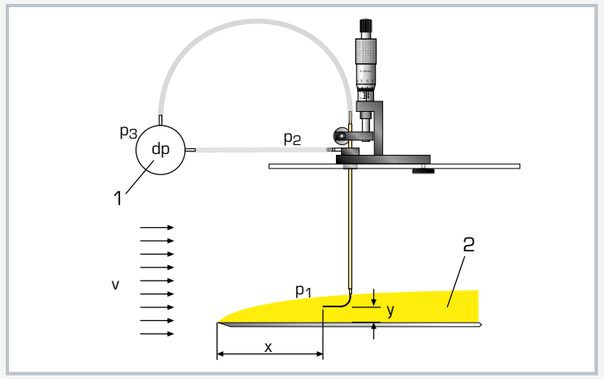


Measuring the dynamic pressure: 1 differential pressure measurement, 2 boundary layer; $p_1$ total pressure, $p_2$ static pressure, $p_3$ dynamic pressure; x horizontal distance between the front edge of the plate and Pitot tube, y vertical distance between plate and Pitot tube, v flow

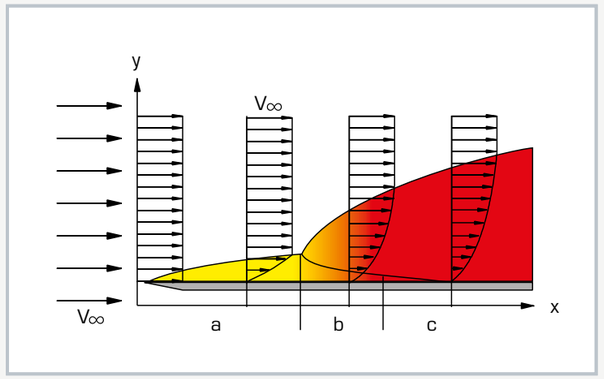


Structure of a boundary layer on a flat plate: y boundary layer thickness; a laminar flow, b change into turbulent flow, c turbulent flow; v flow velocity

### Specification

[1] investigation of the boundary layer on a flat plate with flow along the plate
[2] accessory for the wind tunnel HM 170
[3] 2 plates with different surface roughnesses
[4] Pitot tube for measuring the total pressure at the plate
[5] additional measuring point for measuring the static pressure
[6] horizontal adjustment of the plate using toothed rack
[7] vertical adjustment of the Pitot tube using micrometer screw
[8] the following units can be used for dynamic pressure indication: inclined tube manometer included in HM 170, differential pressure manometer HM 170.53, electronic pressure measurement HM 170.55 or system for data acquisition HM 170.60
[9] displaying measured values on the PC using the software in HM 170.60 and the electronic displacement measurement HM 170.61

### Technical data

2 plates with scale
- aluminium, anodized black
- LxW: 250x279mm, thickness: 3mm
- chamfer: 15°
- smooth surface: 25µm
- rough surface: 400µm
- horizontal adjustment: 180mm

Pitot tube
- inner diameter: 0,7mm
- vertical adjustment: 25mm

Micrometer screw
- resolution: 0,01mm

LxWxH: 600x400x120mm (storage system)
Weight: approx. 5kg

### Scope of delivery

1 experimental unit
2 plates
1 storage system with foam inlay
1 set of instructional material

# HM 170.28
## Wake measurement

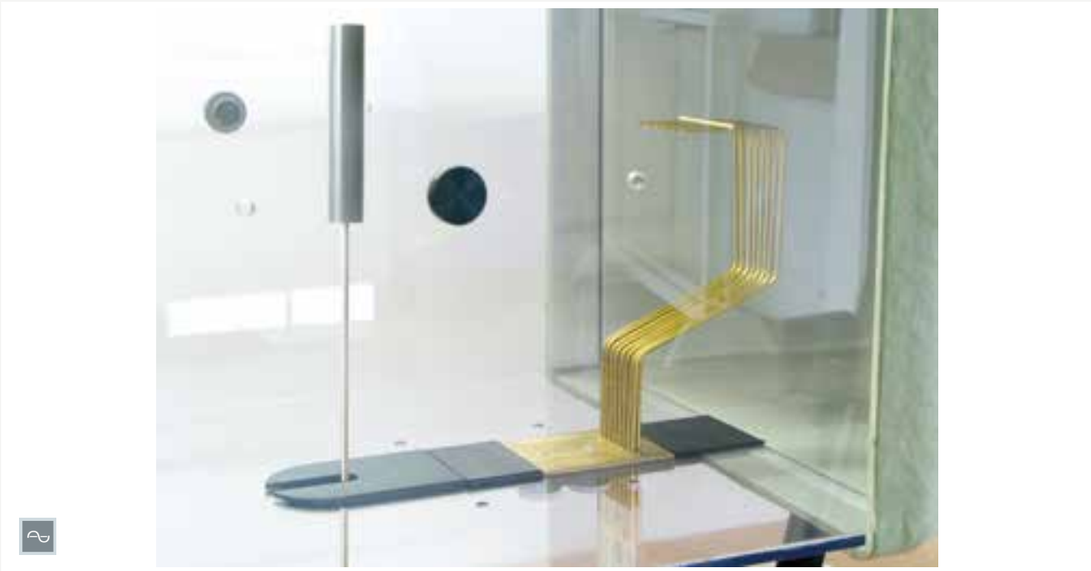

### Description

- **Investigation of the wake of a cylinder immersed in a flow**
- **Wake rake with 15 Pitot tubes**
- **Determine the drag coefficient for cylinders**

Boundary layer flows form when drag bodies are immersed in a flow. In the wake of the body immersed in a flow, these boundary layer flows meet each other and form turbulence that leads to the velocity in this region being reduced. The reduction in velocity leads to a decrease in the dynamic pressure.

The HM 170.28 experimental unit – used in the wind tunnel HM 170 – allows the wake on a cylinder immersed in a flow to be measured. To record the total pressures, the experimental unit contains a wake rake consisting of 15 Pitot tubes. Each Pitot tube is fitted with a hose connection. The wake rake can be mounted at two different distances from the cylinder.

The total pressures are displayed on the tube manometers HM 170.50 or in the electronic pressure measurement HM 170.55. The pressure curve shown there clearly indicates the so-called wake depression. As a key parameter, the drag coefficient of the body in a flow can be determined from the pressures. In addition, the drag coefficient can be determined by measuring the drag force.

### Learning objectives/experiments

- detect pressure distribution using wake rake
- demonstrate wake depression
- determine drag coefficient by pressure distribution in the wake of the cylinder
- determine Reynolds number
- measurement of drag with the force sensor from HM 170
- determine the drag coefficient via the drag force
- comparison of the two methods for determining the drag coefficient




# HM 170.28
## Wake measurement


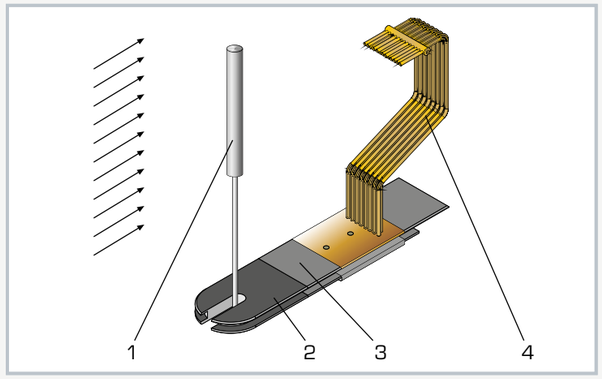


1 cylinder, 2 bracket, 3 spacer plate, 4 wake rake

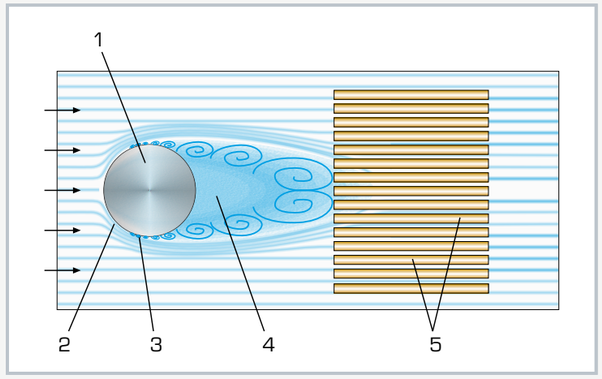


Experimental setup: 1 cylinder in a flow, 2 adjacent streamlines, 3 separation of the flow, 4 turbulence (dead wake region), 5 wake rake

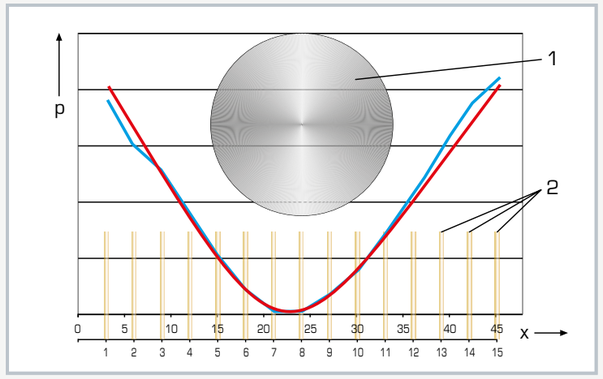


The pressure distribution shows the wake depression behind the cylinder immersed in a flow: blue: measured pressure distribution, red: theoretical pressure distribution; 1 cylinder, 2 Pitot tubes of the wake rake; x width of the wake rake in mm, p pressure

### Specification

[1] investigation of the wake of a cylinder immersed in a flow
[2] accessory for the wind tunnel HM 170
[3] cylinder as drag body
[4] wake rake with 15 Pitot tubes detects total pressures
[5] measurement of drag via force sensor from HM 170
[6] removable spacer plate allows two wake rake positions for measurement
[7] display of the pressures on the 16 tube manometers HM 170.50 or in the electronic pressure measurement HM 170.55

### Technical data

Cylinder
- inner Ø: 20mm
- height: 100mm
- height with supporting rod: 290mm

Wake rake
- 15 Pitot tubes
- inner Ø: 1,1mm
- outer Ø: 2mm
- distance between the Pitot tubes: 3mm

LxWxH: 237x52x175mm
Weight: approx. 3kg

### Scope of delivery

1 experimental unit
1 wake rake
1 cylinder
1 measuring hose
1 set of instructional material

# HM 170.52
## Fog generator

The illustration shows a similar unit.

### Specification

[1] generation of fog for demonstrations in fluid mechanics
[2] lance with two interchangeable nozzles for adapting to different flow velocities
[3] glycol mixture for producing fog, non-toxic, non-corrosive, odourless
[4] continuous operation > 1h

### Technical data

Evaporator
- lance: DxL: 13x180mm
- interchangeable nozzles, angled
  - 2x 0,25mm
  - 3x 0,5mm
- thermostat: 270°C

Supply unit
- content: 750mL
- power consumption: 500W

230V, 50Hz, 1 phase
230V, 60Hz, 1 phase
120V, 60Hz, 1 phase
UL/CSA optional
LxWxH: 350x500x300mm
Weight: approx. 10kg

### Scope of delivery

1 fog generator
1 lance
2 nozzles
1 glycol mixture (5L)
1 manual

### Description

- **device for visualising the flow**
- **two interchangeable nozzles for different flow velocities**

The fog generator HM 170.52 produces high-density fog by evaporating a liquid glycol mixture, in order to visualise flow. The fog is injected into the wind tunnel as a jet by using a lance. For this reason, the lance is inserted into holes in the channel prepared for this purpose. Two interchangeable nozzles are available to adapt the discharge velocity of the jet to the flow velocity of the air in the wind tunnel.

The fog generator can also be used to visualise flows at fans, inlets and outlets.

# HM 170.60
## System for data acquisition

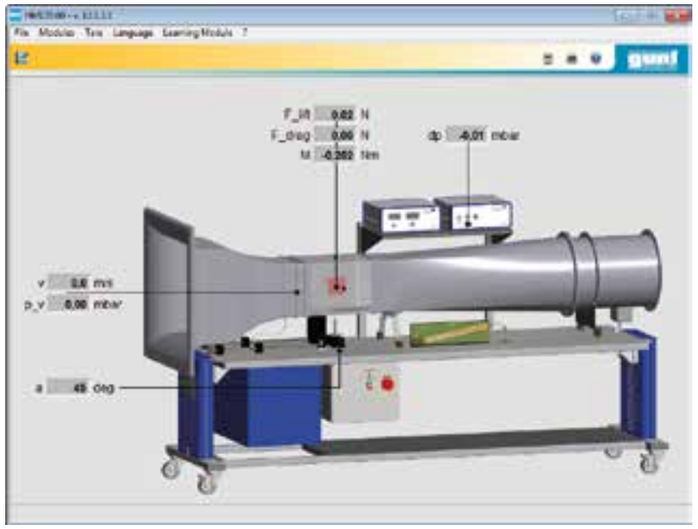

### Specification

[1] system for data acquisition for HM 170
[2] measuring amplifier with connections for angle sensor and electronic displacement measurement, differential pressure measurement, inclined tube manometer, two- or three-component force sensor
[3] velocity, pressure, angle/displacement, lift/drag forces and moment evaluated on the PC
[4] GUNT software for data acquisition via USB under Windows 7, 8.1, 10

### Technical data

Measuring ranges
- velocity: 0...28m/s
- differential pressure: ±5mbar
- angle: ±180°
- travel: 0...10mm
- lift: ±4N
- drag: ±4N
- moment: ±0,5Nm

230V, 50Hz, 1 phase
230V, 60Hz, 1 phase
120V, 60Hz, 1 phase
UL/CSA optional
LxWxH: 360x330x160mm (measuring amplifier)
Weight: approx. 8kg

### Required for operation

PC with Windows

### Scope of delivery

1 measuring amplifier
1 differential pressure sensor
1 angle sensor
1 set of cables
1 hose
1 GUNT software CD + USB cable
1 manual

### Description

- **representation of characteristics**
- **printout and storage of measured values**

The data acquisition system has been developed specifically to support the analysis of experiments with the wind tunnel HM 170. HM 170.60 consists of a measuring amplifier with differential pressure sensor and A/D converter, an angle sensor and software.

The system supports experiments such as measurement of lift and drag on drag bodies, or boundary layer analysis on a plate. Therefore, depending on the experiments, two pressure measuring points, an angle sensor respectively the electronic displacement measurement HM 170.61, the inclined tube manometer from HM 170 and the two-component force sensor from HM 170 or the three-component force sensor from HM 170.40 can be connected to the measuring amplifier.

Velocity, differential pressure, angle of attack or displacement and moment, lift and drag forces are transmitted via USB directly to a PC where they can be analysed using the software.

# HM 226
## Wind tunnel for visualisation of streamlines

### Description

- **wind tunnel with fog generator**
- **various models included**
- **illuminated experimental section with sight window**
- **low-turbulence flow**

Streamlines can be visualised in steady flow in the wind tunnel by using fog, smoke or tufts. In this way, a clear impression of an instantaneous flow field can be presented and problematic flow areas, such as stall, can be shown.

The experimental unit HM 226 is an open wind tunnel, in which streamlines, flow separation and turbulence can be made visible by using fog. The evaporated fog fluid is non-toxic, water soluble and the precipitate does not affect common materials. Precipitates can be easily wiped off with a cloth.

The air flow is generated by a fan. To achieve a low-turbulence flow, the air flows through a stabilisation chamber with a flow straightener. Fog is added to the flowing air through several nozzles. Then the air flows around or through a model in a experimental section and the flow field becomes visible. The experimental section has a black background and a sight window; additional lighting makes the streamlines clearly visible.

Four interchangeable models (cylinder, orifice plate, aerofoil and guide vane profile) are included. The aerofoil's angle of attack is adjustable.

### Learning objectives/experiments

- visualisation of streamlines
- flow around or through differently shaped models
- flow separation and turbulence
- stall as a function of the angle of attack




# HM 226
## Wind tunnel for visualisation of streamlines


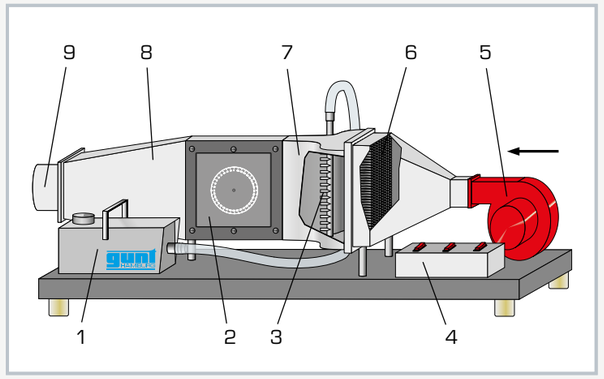


1 fog generator, 2 experimental section with sight window, 3 distributor for fog with nozzles, 4 switch cabinet, 5 radial fan, 6 stabilisation chamber with flow straightener, 7 intake contour in nozzle design, 8 diffuser, 9 air outlet

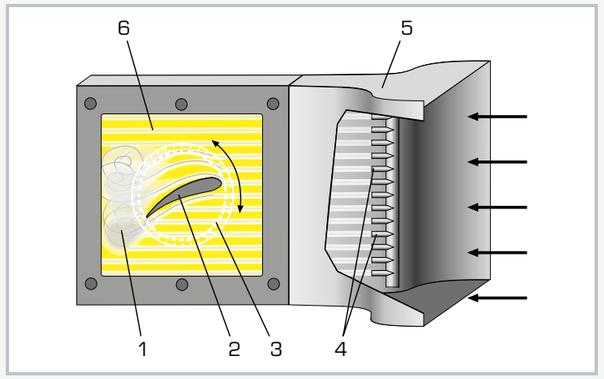


detailed view of the experimental section
1 turbulence, 2 model, 3 scale for adjusting the angle of attack, 4 nozzles for injecting fog, 5 intake contour in nozzle design, 6 illuminated experimental section

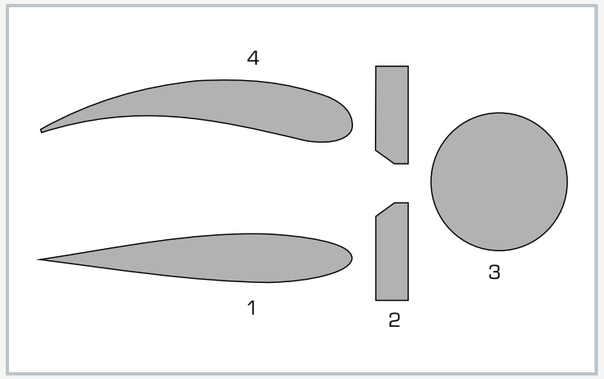


1 aerofoil, 2 orifice plate, 3 cylinder, 4 guide vane profile

### Specification

[1] visualisation of streamlines flowing around and through different models
[2] open wind tunnel with radial fan and a fog generator
[3] operation with non-toxic and water-soluble fog fluid
[4] illuminated experimental section with sight window and black background
[5] low-turbulence flow through stabilisation chamber with flow straightener
[6] distributor with nozzles for injecting the fog
[7] four different models, angle of attack at aerofoil and guide vane profile adjustable
[8] scale for displaying the angle of attack

### Technical data

Experimental section
- transparent area: 252x252mm
- cross-section: 252x42mm
- aerofoil pivotable by 360°

Models
- cylinder: diameter: 60mm, height: 24,5mm
- aerofoil: 15x24,5x100mm
- guide vane profile: 20x24,5x100mm
- orifice plate: 2x 25x24,5x10mm
  - orifice opening: 10mm

Radial fan
- max. volumetric air flow rate: 480m$^3$/h
- max. pressure difference: 300Pa

Fog generator
- power consumption: 700W

230V, 50Hz, 1 phase
230V, 60Hz, 1 phase
LxWxH: 1400x500x490mm
Weight: approx. 50kg

### Scope of delivery

1 experimental unit
1 fog generator
1 set of models
1 fog fluid (5L)
1 hose
1 set of tools
1 set of instructional material

# HM 225
## Exchangeable accessories for a wide range of experiments

### Experiments from the field: steady flow, chapter 2

**HM 225.03**
Bernoulli's principle

**HM 225.05**
Flow in a pipe elbow

**HM 225.07**
Free jet

### Experiments from the field: flow around bodies, chapter 3

**HM 225.02**
Boundary layers

**HM 225.04**
Drag forces

**HM 225.06**
Coanda effect

**HM 225.08**
Visualisation of streamlines

# HM 225 Aerodynamics trainer
# Flow around bodies in air

## The trainer

Fluid mechanics experiments with a gaseous fluid – usually air – are as important in engineering education as experiments with a liquid medium. Comparison and working out analogies between liquid and air flow, lead the student to a deeper understanding of the interrelationships and common principles.

The aerodynamics trainer, together with the appropriate accessories, offers selected experiments in the field of flow around bodies in air. The illustrative experiments deal with typical topics such as boundary layer, drag forces, or visualisation of streamlines.

The figure shows the HM 225 trainer with the accessory HM 225.02 Boundary layers. The pressures are measured with a Pitot tube and displayed on the 16 tube manometers

## The topics

### Investigation of the boundary layer on a flat plate

**HM 225.02 Boundary layers**

- study boundary layer at two different surfaces (rough and smooth)
- removable side body for studying boundary layer interference with degressive or progressive pressure profile

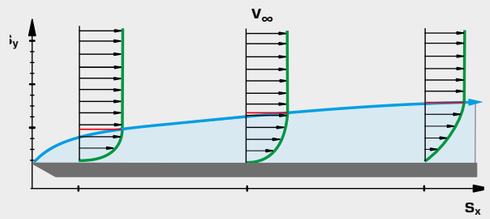


velocity distribution,
boundary layer thickness on the smooth surface

### Determining drag forces in different bodies

**HM 225.04 Drag forces**

- direct measurement of drag by using a beam scale
- determining drag coefficients for different bodies

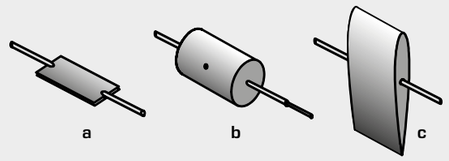


Various drag bodies

**a** plate, **b** cylinder, **c** aerofoil

### Demonstration of the Coanda effect

**HM 225.06 Coanda effect**

- investigation of wall-guided flow
- amplification effect in pneumatic elements

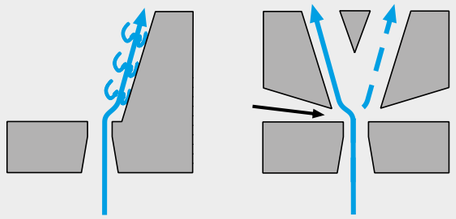

**left** adherence of the jet through a pressure difference
**right** the air jet can be diverted by a control jet (black arrow)

### Using fog to show streamlines

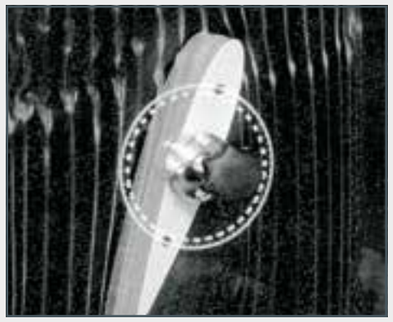

Separation of the flow on the right side by changing the angle of attack

**HM 225.08**
**Visualisation of streamlines**

- generate flow patterns of bodies under surrounding flow
- represent stall phenomena

# HM 225
## Aerodynamics trainer

The illustration shows HM 225 together with HM 225.02.

### Description

- **flow velocities up to 40m/s possible**
- **homogeneous flow through the flow straightener and special nozzle contour**
- **matching accessories offer a wide range of experiments**

Aerodynamics describes the behaviour of bodies during flow around or through bodies with a compressible fluid. The knowledge of experiments in aerodynamics has a significant influence on the development of means of transport (vehicles, ships, aircraft) and in architecture (skyscrapers, towers and bridges).

HM 225 offers – along with its accessories – typical experiments from the field of flow around, incident flow and flow through models, as well as further experiments in the field of steady incompressible flow.

The trainer includes a radial fan, which can be used to generate flow velocities up to 40m/s. The speed is infinitely adjustable by using a frequency converter. A stabilisation tank with flow straightener ensures a consistent, low-turbulence and reproducible flow in the measuring section. A carefully shaped nozzle provides a largely homogeneous velocity distribution of the air flow. The accessory is attached using quick release fasteners and can be interchanged quickly and easily. Measuring points along the measuring section allow pressure and velocity measurements to be taken. The tube manometers are used to show the pressures clearly.

### Learning objectives/experiments

- together with appropriate accessories: experiments from the field of flow around bodies
  - velocity measurement of flows with Pitot tube
  - boundary layer analysis on a flat plate with flow along the plate
  - drag of bodies
  - demonstration of the Coanda effect
  - visualisation of streamlines
- together with appropriate accessories: experiments from the field of steady incompressible flow
  - velocity measurement of flows with Pitot tube and Pitotstatic tube
  - free jets
  - flow in a pipe elbow
  - proof of Bernoulli's principle



HM 225
Aerodynamics trainer

1 nozzle, 2 installation measuring section, 3 thermometer, 4 exhaust air pipe, 5 radial fan, 6 tube manometers, 7 switch cabinet with speed adjustment, 8 stabilisation tank with flow straightener

Determining drag in various drag bodies using the accessory HM 225.04

Investigation of flow in a pipe elbow with the accessory HM 225.05

### Specification

[1] aerodynamics experiments in the fields of flow around, incident flow and flow through models, as well as further experiments in the field of steady incompressible flow.
[2] vertical measuring section with flow straightener and nozzle
[3] radial fan infinitely variable via frequency converter
[4] thermometer for measuring air temperature
[5] accessory securely attached to HM 225 with quick release fasteners
[6] 16 tube manometers for displaying pressures
[7] accessories for the field of flow around bodies: Boundary Layers (HM 225.02), Drag Forces (HM 225.04), Coanda Effect (HM 225.06), Visualisation of Streamlines (HM 225.08)
[8] accessories for the field of steady incompressible flow: Bernoulli's principle (HM 225.03), Flow in a pipe elbow (HM 225.05), Free Jets (HM 225.07)

### Technical data

Radial fan
- power consumption: 0,37kW
- max. volumetric flow rate: $15m^3/min$
- nozzle exit cross-section: 50x100mm
- max. flow velocity at the nozzle exit: 40m/s

230V, 50Hz, 1 phase
230V, 60Hz, 1 phase
120V, 60Hz, 1 phase
LxWxH: 1880x800x1900mm
Weight: approx. 220kg

### Scope of delivery

1 trainer
1 set of instructional material

# HM 225.02
## Boundary layers

### Learning objectives/experiments

- internal friction of gases
- investigation of the boundary layer on the flat plate
- influence of surface roughness on the formation of a boundary layer
- boundary layer interference with degressive/progressive pressure curve

### Description

- **investigation of the boundary layer at two different rough surfaces**
- **boundary layer interference with pressure profile**
- **accessories for aerodynamics trainer HM 225**

During incident flow of bodies fluids such as air "stick" to the surface of the body and form the so-called boundary layer. The kind of flow within the boundary layer – laminar or turbulent – significantly affects the drag. The findings from studying the boundary layer are taken into consideration when designing aeroplanes, vessels and turbomachines.

The HM 225.02 experimental unit – used in the aerodynamics trainer HM 225 – allows the boundary layer on a flat plate to be studied. For this purpose, air flows along the plate, parallel to the surface. The plate has two different surfaces so as to study the effect of surface conditions on the boundary layer. Side bodies can be used in the measuring section. Thus the boundary layer phenomena can experience interference with a degressive or progressive pressure curve and, for example equalise the friction loss of the flow.

A horizontally movable Pitot tube, adjusted using a micrometer screw, measures the total pressures at various distances from the plate surface. The plate can be moved vertically to enable the recording of total pressures in the direction of flow. The velocity can be determined from the pressures read off the tube manometers in HM 225.

The experimental unit is attached to the HM 225 trainer, simply and precisely with quick release fasteners.



HM 225.02
Boundary layers

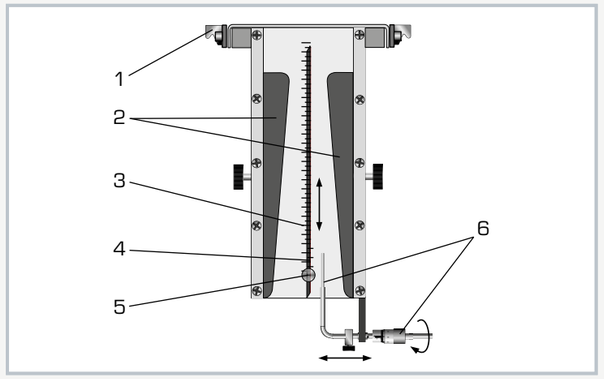


1 quick release fastener for connecting to HM 225, 2 removable side bodies, 3 scale, 4 plate with different surfaces, 5 vertical adjustment of the plate, 6 Pitot tube with micrometer screw for horizontal adjustment

Experimental setup: 1 HM 225, 2 HM 225.02, 3 tube manometers (HM 225) with connection to HM 225.02

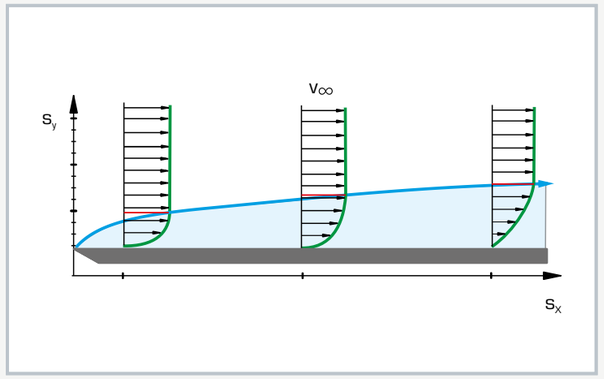


Velocity distribution and boundary layer thickness in the boundary layer of a flat plate; $S_y$ distance from the surface, $S_x$ distance from leading edge, green: distribution of the velocity, blue: boundary layer thickness

### Specification

[1] investigation of boundary layers on a flat plate with flow along the plate
[2] accessories for the aerodynamics trainer HM 225
[3] plate with two different rough surfaces
[4] moveable plate, along the direction of flow
[5] Pitot tube for measuring the total pressure at the plate
[6] adjustment of the Pitot tube to the plate using micrometer screw
[7] removable side bodies for interference of the boundary layer with degressive or progressive pressure profile
[8] 16 tube manometers of HM 225 for displaying the dynamic pressures

### Technical data

Pitot tube
- diameter: 0,7mm
- movable: 0,35...50mm

Plate, movable: 0...250mm
- LxW: 260x55mm, thickness: 5mm
- chamfer: 30°
- smooth surface: 25µm
- rough surface: 400µm

2 side bodies, removable
- inclination: 1:12,5

LxWxH: 250x130x370mm
Weight: approx. 4kg

### Scope of delivery

1 experimental unit
1 plate
2 side bodies
1 set of instructional material

# HM 225.04
## Drag forces

### Description

- **determining drag forces on models immersed in a flow**
- **accessories for aerodynamics trainer HM 225**

Every body immersed in a flow is subject (besides hydrostatic lift) to a flow-induced force, which depends mainly on the velocity of flow, the size of the body and the shape of the body. The shape of the body is represented by the dimensionless number, the drag coefficient $c_w$.

The goal of scientific study and practical application (e.g. in vehicle construction) is to design the perfect body shape in order to keep drag low. The drag coefficient for arbitrarily shaped bodies can only be determined reliably by experimentation.

The HM 225.04 experimental unit – used in the aerodynamics trainer HM 225 – allows drag to be measured in various models so as to determine the respective drag coefficients. In the measuring section, a model (plate, cylinder and aerofoil model) is used as a drag body. The forces occurring in the air flow are measured with a beam scale with movable weight. When conducting the experiment with a cylinder, a Pitot tube can be used to record a pressure distribution of the surrounding flow.

Also, the drag can be measured indirectly via the pulse rate. The Pitot tube, movable obliquely to the direction of flow, allows pressures to be recorded so as to determine the velocity profile downstream of the cylinder and thus to gauge the so-called wake depression.

The experimental unit is attached to the HM 225 trainer, simply and precisely with quick release fasteners.

### Learning objectives/experiments

- measure drag forces on models immersed in a flow
- determining drag coefficients
- application of the pulse rate
- record pressure distribution on the cylinder immersed in a flow
- measure the wake depression behind the cylinder immersed in a flow



HM 225.04
Drag forces

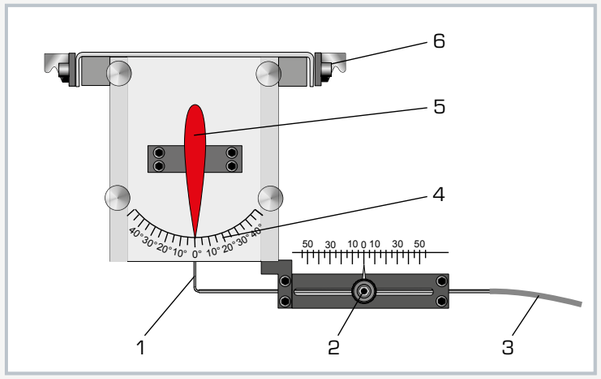


Recording the pressure distribution with Pitot tube: 1 Pitot tube, 2 horizontal adjustment of the Pitot tube, 3 connection to tube manometer (HM 225), 4 scale for adjusting the angle of attack, 5 aerofoil model, 6 quick release fastener for connecting to HM 225

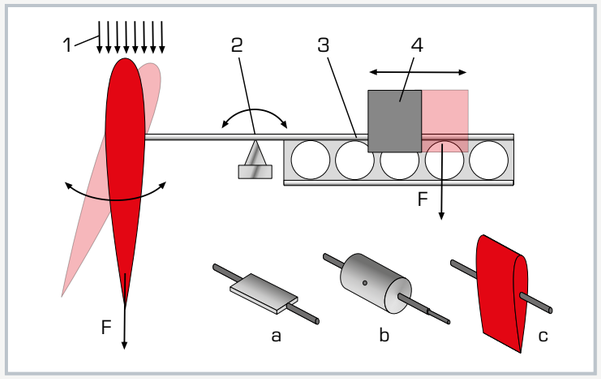


Measurement of drag forces on models immersed in a flow: 1 air flow, 2 pivot point for calculating the equilibrium of moments, 3 beam scale, 4 movable weight; drag bodies: a plate, b cylinder, c aerofoil model

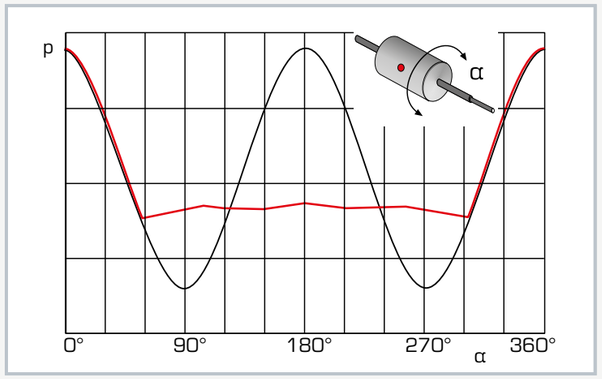


Pressure distribution on the cylinder immersed in a flow; p pressure (relative), α angle between pressure tap and flow direction; red: measured values, black: theoretical curve (potential flow)

### Specification

[1] determining drag forces on models immersed in a flow
[2] recording the pressure distribution on models immersed in a flow
[3] recording the velocity profile for measuring the wake depression behind the cylinder immersed in a flow
[4] accessories for the aerodynamics trainer HM 225
[5] models: plate, cylinder and aerofoil model as drag body
[6] cylinder with additional pressure measuring point
[7] Pitot tube with horizontal adjustment for measuring the total pressures

### Technical data

Pitot tube
- diameter: 1,1mm
- horizontal adjustment: 50...0...50mm

Measuring section: cross-section 50x100mm
Angle scale: ±40°
Weights: 1x10g, 1x40g

Drag body
- plate: LxW: 45x15mm, thickness: 1mm
- cylinder: DxH: 15x45mm
- aerofoil model: LxWxH: 100x15x45mm

LxWxH: 320x250x200mm
Weight: approx. 2kg

### Scope of delivery

1 experimental unit
3 drag bodies
1 set of instructional material

# HM 225.06
## Coanda effect

### Learning objectives/experiments

- investigation of wall-guided air flow (Coanda effect)
- familiarisation with the principle of pneumatic logic elements
- study amplification effect in pneumatic elements

### Description

- **demonstration of the Coanda effect at a pneumatic logic element**
- **accessories for aerodynamics trainer HM 225**

The Coanda effect refers to the characteristic of flowing fluids to follow the curvature of a convex surface instead of continuing in the original direction of flow. Nowadays this effect is applied in various fields of engineering, e.g. to increase lift in air travel, to control the air flow in air conditioning or as a pneumatic logic element in industrial control systems. Pneumatic logic elements have the advantage that they do not wear out, they work reliably and are resistant to heat, ionising radiation and vibration.

The direction of flow in pneumatic logic elements is switched with a turbulent free jet (control jet), which for example, emerges from a nozzle and entrains the fluid from the environment (boundary layer). Since the control jet is usually weaker than the jet to be deflected, we refer to the amplification effect.

The HM 225.06 experimental unit – used in the aerodynamics trainer HM 225 – allows the demonstration of the Coanda effect on a pneumatic logic element.

The air flows through a Y-shaped channel with two outlets. The lateral inflow of air into the channel (control jet) can switch the air flow between the two outlets.

The contour of the channel is varied via pivoting and sliding elements, so as to study how the switchover works. Scales allow precise adjustment of the elements.

The experimental unit is attached to the HM 225 trainer, simply and precisely with quick release fasteners.



# HM 225.06
## Coanda effect

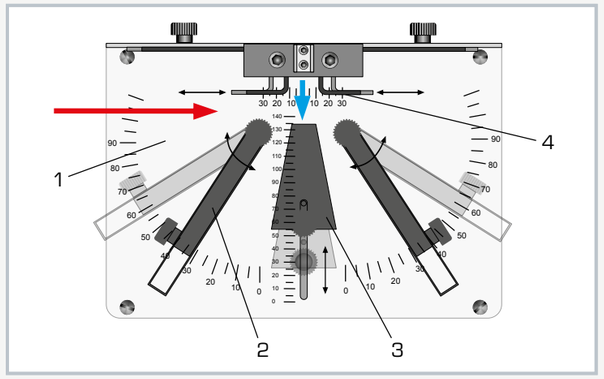


1 transparent plate with different scales, 2 pivoting and sliding side panels, 3 sliding wedge, 4 adjustable nozzle; blue arrow: air intake, red arrow: control jet

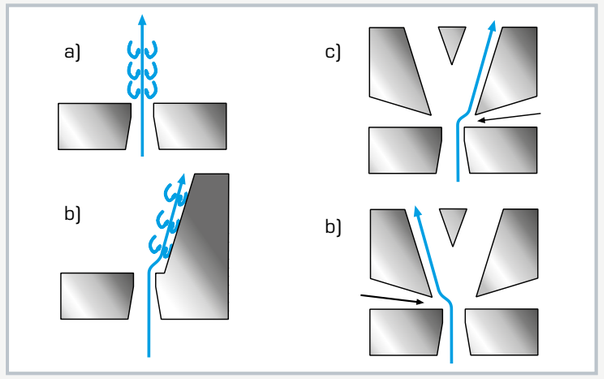


Controlled guidance of air flow in wall elements
a: freely escaping jet of air
b: guidance of the air flow on a wall
c, d: deflection of the air flow by a control jet
blue: air flow, black: control jet

### Specification

[1] demonstration of the Coanda effect in pneumatic logic elements
[2] accessories for HM 225 Aerodynamics Trainer
[3] transparent plate with vertical, horizontal and radial scales
[4] Y-channel with pivoting and sliding elements and vertical sliding wedge for adjusting different contours
[5] adjustable contours for varying the air flow

### Technical data

Nozzle outlet
- width: 0...50mm
- length: 100mm

Pivoting and sliding elements: 0...90°
Wedge, sliding: 0...140mm

LxWxH: 300x230x230mm
Weight: approx. 6kg

### Scope of delivery

1 experimental unit
1 set of instructional material

# HM 225.08
## Visualisation of streamlines

### Learning objectives/experiments

- illustrative demonstration without detection or analysis of measured values
- flow patterns in real fluids when flowing around and through models
  - aerofoil with adjustable angle of attack
  - cylinder
  - orifice plate for change in cross-section
- flow separation and stall

### Description

- **visualisation of streamlines flowing around and through models**
- **fog generator is included**
- **accessories for aerodynamics trainer HM 225**

Streamlines can be visualised in steady flow in the wind tunnel by using fog, smoke or tufts. In this way, a clear impression of an instantaneous flow field flow can be presented and problematic flow areas, such as stall, can be shown.

The HM 225.08 experimental unit – used in the aerodynamics trainer HM 225 – allows the streamlines to be visualised using fog. In the fog generator supplied a fog fluid is evaporated and inlet into the wind tunnel via a slotted pipe. A model (aerofoil, cylinder, orifice plate) is located in the measuring section, around and through which the fog flows. The flow course for the flow around and through becomes visible, as does flow separation.

The measuring section has a black background and a transparent front plate for better observation of the streamlines. The aerofoil model's angle of attack is adjustable. The fog fluid is non-toxic, water soluble and the precipitate does not affect common materials. Precipitates can be easily wiped off with a cloth.

The experimental unit is attached to the HM 225 trainer, simply and precisely with quick release fasteners.



HM 225.08
Visualisation of streamlines

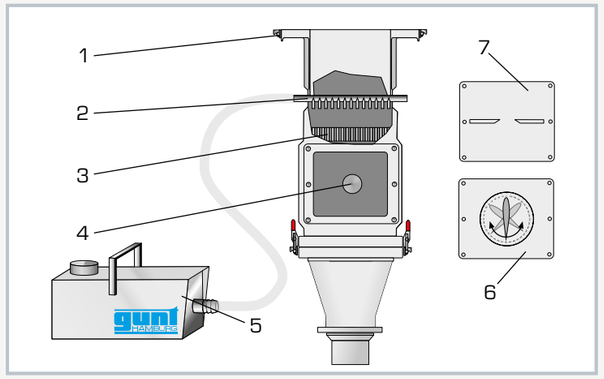


1 quick release fastener for connecting to HM 225, 2 distributor for fog with nozzles, 3 flow straightener, 4 cylinder drag body, 5 fog generator, 6 rotating aerofoil drag body, 7 orifice plate model

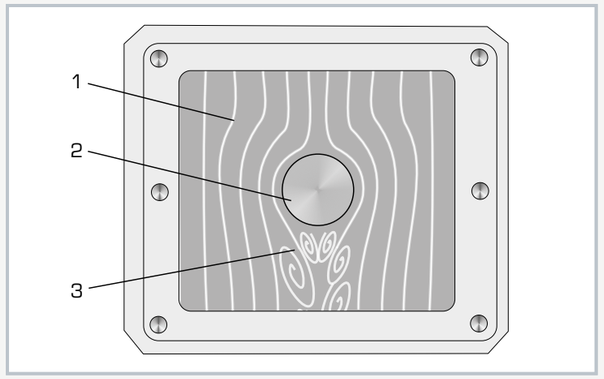


Flow course around a cylinder: 1 streamlines, 2 drag body, 3 flow separation with turbulence

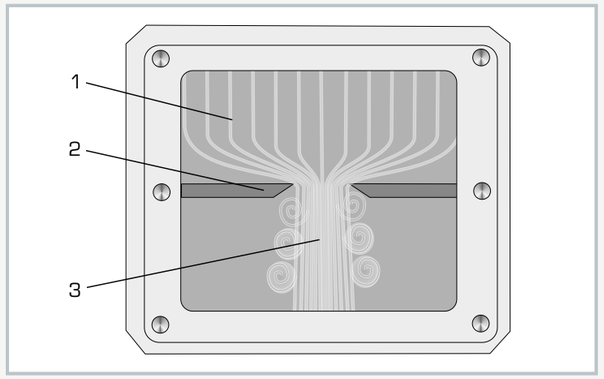


Flow pattern through an orifice plate: 1 streamlines, 2 orifice plate, 3 constricted flow in the middle, turbulence at the edge

### Specification

[1] visualisation of streamlines by using fog
[2] accessories for HM 225 Aerodynamics Trainer
[3] vertical measuring section with transparent front plate and black background
[4] fog generator, operation with non-toxic and water-soluble fog fluid
[5] three models for insertion into the wind tunnel
[6] aerofoil with adjustable angle of attack
[7] scale for displaying the angle of attack

### Technical data

Measuring section
- cross-section in the viewing area: 252x42mm

Models
- aerofoil, adjustable angle of attack
- orifice plate
- cylinder

230V, 50Hz, 1 phase
230V, 60Hz, 1 phase
(fog generator)
LxWxH: 480x380x1060mm (wind tunnel)
LxWxH: 420x240x220mm (fog generator)
Total weight: approx. 23kg

### Scope of delivery

1 experimental unit
1 set of models
1 fog generator
1 fog fluid (5L)
1 Satz set of instructional material

# CE 220
## Fluidised bed formation

### Learning objectives/experiments

- fundamentals of the fluidisation of bulk solids
- observation and comparison of the fluidisation process in water and air
- pressure loss dependent on flow velocity
- pressure loss dependent on the type and particle size of the bulk solid
- determination of the fluidisation velocity and comparison with theoretically calculated values (Ergun equation)
- dependency of the height of the fluidised bed on the flow velocity
- verification of Carman-Kozeny equation

### Description

- **experimental investigation of the fluidisation process**
- **comparison of fluidised bed formation in gases and liquids**
- **pressure loss in fixed beds and fluidised beds**
- **optimum observation of processes through transparent tanks**

Bulk solids can be transformed from a fixed bed into a fluidised bed when liquids or gases pass through them. The areas of application of fluidised beds include the drying of solids and a wide variety of chemical processes.

CE 220 features two transparent test tanks for fluidised bed formation in water and air. A diaphragm pump delivers water from a storage tank into the bottom of the left side test tank. The water flows upwards through a porous sintered-metal plate.

On the sintered-metal plate is a bulk solid. If the velocity of the water is less than the so-called fluidisation velocity, the flow merely passes through the fixed bed. At higher velocities the bed is loosened to such an extent that individual solid particles are suspended by the fluid. If the velocity is increased further, particles are carried out of the fluidised bed. A filter at the top of the test tank holds these particles back. The water flows back into the storage tank.

The right-side test tank is similar in construction to the left-side one. An air flow generated by a compressor flows through it.

Manometers are mounted on both test tanks to measure the pressure loss. The flow rates are adjusted by way of valves, and can be read from flow meters. The test tanks are removable. This makes it easy to change the bulk solid filling.

Glass-shot beads in a range of particle sizes are provided as the bulk solid filling.



# CE 220
## Fluidised bed formation

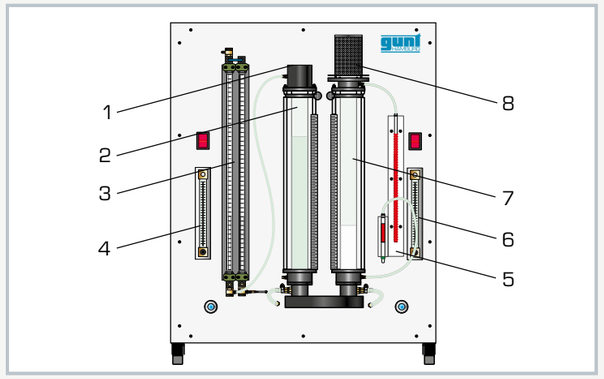


1 water overflow, 2 test tank for water, 3 twin tube manometers, 4 flow meter for water, 5 U-tube manometer, 6 flow meter for air, 7 test tank for air, 8 filter

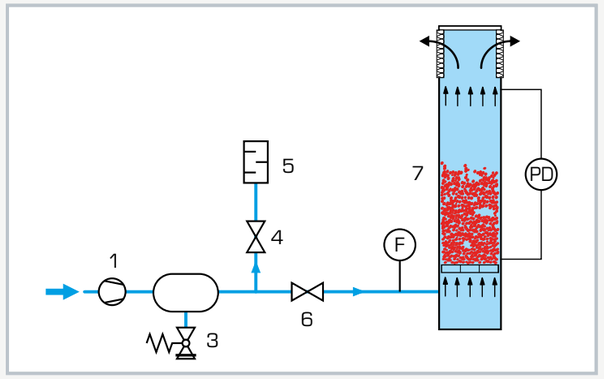


Compressed air supply: 1 compressor, 2 compressed air accumulator, 3 safety valve, 4 bypass valve, 5 sound absorber, 6 needle valve, 7 test tank (air);
F flow rate, PD differential pressure

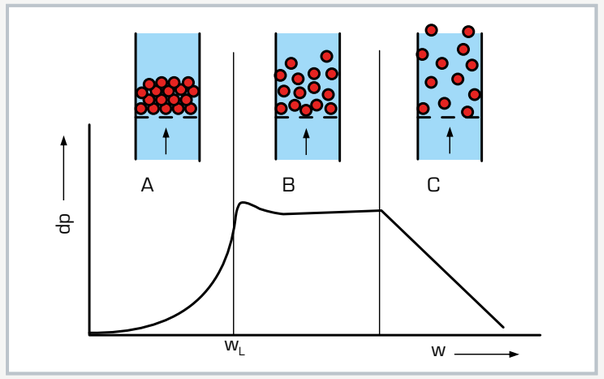


Pressure loss characteristic on a homogeneous fluidising bed: dp pressure loss, w flow velocity, $w_L$ fluidisation velocity;
A fixed bed, B fluidised bed, C transport

### Specification

[1] investigation of fluidised bed formation of solids in air and water
[2] 2 transparent test tanks to observe fluidised bed formation in air/water
[3] 1 manometer per tank to measure the pressure loss through each test tank
[4] 1 steel rule per tank to measure the change in height of the fluidised beds
[5] both test tanks removable for filling
[6] storage tank with diaphragm pump for water supply
[7] diaphragm compressor with compressed air accumulator for compressed air supply
[8] adjustment of flow rate for both media by valves and flow meter

### Technical data

2 test tanks
- length: 550mm
- inside diameter: 44mm
- scale division: 1mm
- Material: PMMA

Diaphragm pump (water)
- max. flow rate: 1,7L/min
- max. head: 70m

Diaphragm compressor (air)
- max. volumetric flow rate: 39L/min
- max. pressure: 2bar

Tanks
- water storage tank: approx. 4L
- compressed air accumulator: 2L

Measuring ranges
- pressure (water): 0...500mmWC
- pressure (air): 0...200mmWC
- flow rate (water): 0,2...2,2L/min
- flow rate (air): 4...32L/min

230V, 50Hz, 1 phase
230V, 60Hz, 1 phase
120V, 60Hz, 1 phase
UL/CSA optional
LxWxH: 750x610x1010mm
Weight: approx. 80kg

### Scope of delivery

1 experimental unit
1kg glass-shot beads (180...300µm)
1kg glass-shot beads (420...590µm)
1 set of instructional material

# HM 136
## Flow through packed columns

The illustration shows a similar unit.

### Learning objectives/experiments

- function of a packed column
- compare operating modes
  - with water
  - water-air operation in parallel flow
  - water-air operation in counterflow
- demonstration of
  - wall effect
  - stream formation
  - loading point
  - flooding point
- hydraulic characteristics
  - pressure loss diagram
  - holdup diagram

### Description

- **transparent model of a packed column**
- **flow through the column with water or water and air**
- **parallel flow or counterflow mode**

Packed columns have a variety of uses in process engineering, waste water and air purification and in biotechnical systems. For example, in an adsorption column the two substances can be brought into close contact using the packing. When used as a fixed bed reactor, the packing carries the catalyst necessary for the reaction. Packing is available in the widest variety of shapes and materials.

Observing the desired flow conditions is vital for proper functioning. Wetting, contact time and flow resistance play a key role. These packed column properties can be studied with the HM 136 trainer, and important phenomena such as the wall effect or the flooding point can be demonstrated.

The central element of the trainer is the transparent packed column. The pressures in the top, middle and bottom of the column are measured, so that the pressure losses in the fixed bed can be determined. The column can be operated with water or water and air. When operating with water, the direction of flow can be changed, so that even a fully flooded column can be studied, such as in a fixed bed reactor. Operating the column with water and air in counterflow simulates the application as an absorption column. The packed bed is interchangeable, so that a laboratory's own packing can also be tried out.

The experimental unit has its own air and water supply. The closed water circuit consists of storage tank, pump, flow meter and valve. The air supply includes a compressor with flow meter and valve.



# HM 136
## Flow through packed columns

1 digital pressure indicators, 2 air flow meter, 3 compressor for air, 4 storage tank, 5 pump for water, 6 bottom rising-falling switch valve, 7 water flow meter, 8 two-piece packed column, 9 top rising-falling switch valve

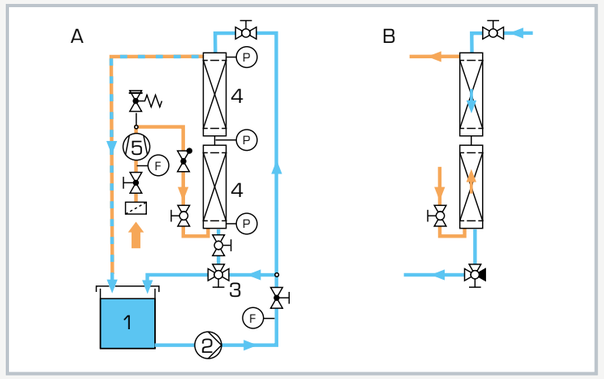


A process schematic: 1 storage tank, 2 pump, 3 switch valve, 4 packed column, 5 compressor; F flow rate, P pressure; B operating mode water falling, air rising (counterflow)

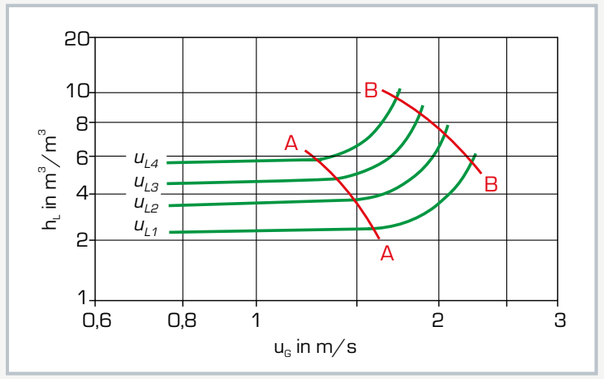


Holdup diagram: A loading point, B flooding point, $h_L$ holdup, $u_G$ superficial gas velocity, $u_{L1...4}$ specific liquid load

### Specification

[1] trainer for studying the flow in packing layers
[2] transparent DURAN glass packed column with interchangeable packed bed
[3] operation with water or water and air
[4] water-air operation in parallel flow or counterflow
[5] water direction of flow can be reversed
[6] closed water circuit with a pump and storage tank
[7] compressor for air supply
[8] measurement of flow rate and pressure loss

### Technical data

Pump
- max. flow rate: 18L/min
- max. head: 45m
- power consumption: 250W

Compressor
- max. volumetric flow rate: 8m³/h
- max. pressure: 1bar rel.
- power consumption: 370W

Packed column
- inner diameter: 80mm
- length: 2x 500mm
- packing height: approx. 350mm

Storage tank: 55L

Measuring ranges
- flow rate (air): 1...10m³/s
- flow rate (water): 50...600L/h
- differential pressure: 2x 0...100mbar, 1x 0...300mbar

230V, 50Hz, 1 phase
230V, 60Hz, 1 phase; 120V, 60Hz, 1 phase
LxWxH: 1350x790x1980mm;
H ready for conducting experiments: 2500mm
Weight: approx. 250kg

### Scope of delivery

1 trainer
1 set of accessories
1 set of instructional material

# 4 Examples of transient flow


**Overview**
Transient flow in pipes and surge chambers 242

**Overview**
Devices for experiments in the field of transient flow 244

**HM 155**
Water hammer in pipes 246

**HM 156**
Water hammer and surge chamber 248

**HM 143**
Transient drainage processes in storage reservoirs 250

**HM 150.15**
Hydraulic ram – pumping using water hammer 252

**HM 150**
Base module for experiments in fluid mechanics 254


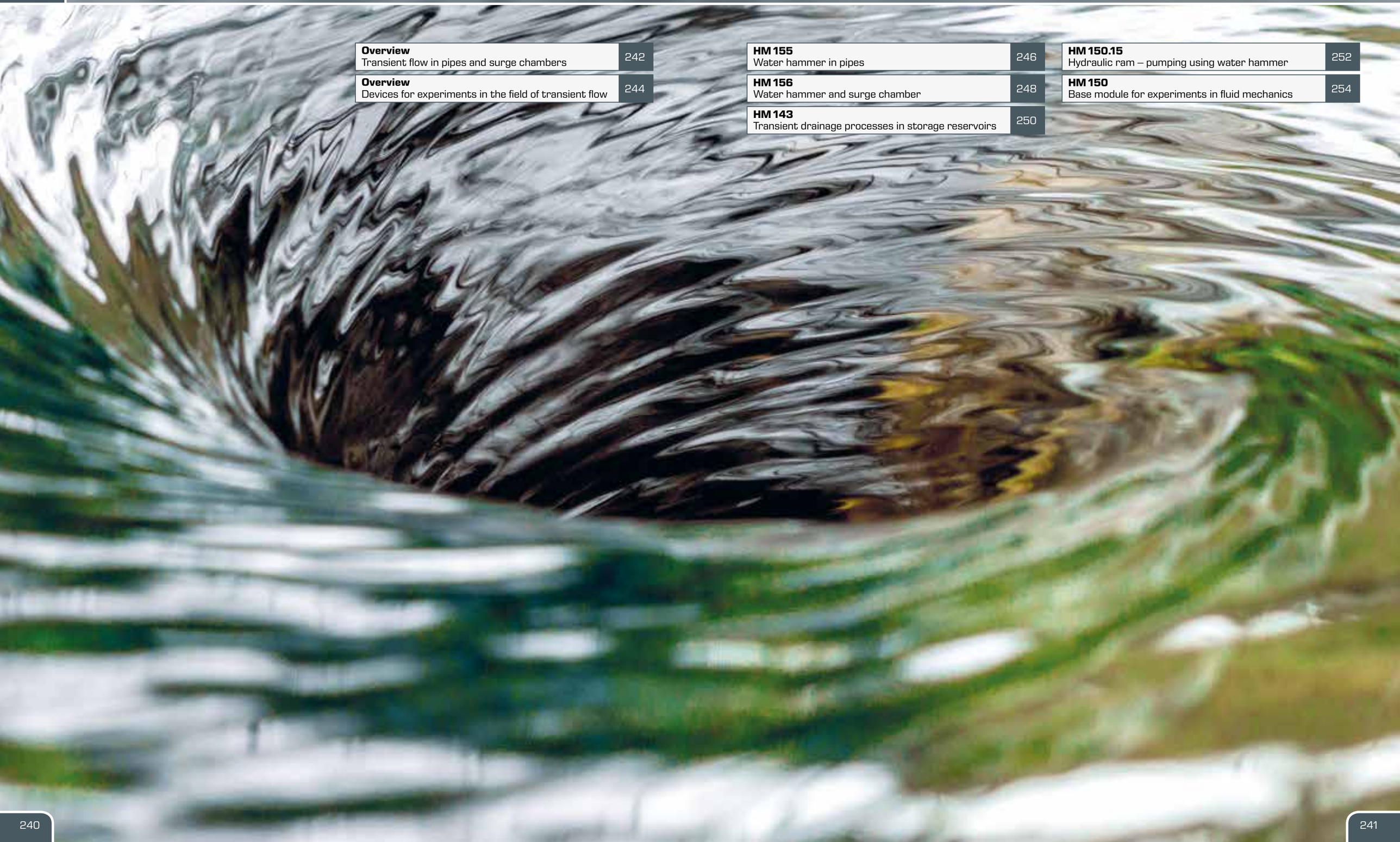

# Transient flow in pipes and surge chambers

## Transient flow

Flows in which flow conditions vary over time at an 'observation point' are known as transient. An exception is changes caused by turbulence. For flows with a free surface a transient flow can be recognised by the variation in the water level over time.

Transient flows occur during all startup and shutdown processes of turbomachines, in equipment and pipelines as well as during discharge processes from containers with variable liquid level; similarly in fluid vibrations (surge chamber), with water hammer processes in pipes and in open channels (positive and negative surges/hydropeaking).

In practice, the understanding of transient flow conditions is useful for commercial designs of pipelines (reserve in water hammer) in water distribution systems, process plants and hydroelectric power stations.

GUNT provides you with illustrative experimental units for studying transient flows in pipelines, representing water hammer, and showing how surge chambers work as safety elements in hydroelectric power stations.

We demonstrate the useful effect of water hammer for pumping water by the operating principle of a hydraulic ram.

Collapsed tank as a result of water hammer

Damaged pipe and pipe brackets caused by a water hammer

Pipe breakage, caused by water hammer

## Water hammer in pipes

A common phenomenon of transient flow is the occurrence of water hammer in pipes. Fluctuations of pressure and flow rate can significantly exceed or fall below the designed pressure for a pipeline.

Water hammer is caused by:

- closing or opening shut-off elements in the pipeline
- startup and shutdown pumps and turbines
- re-commissioning systems
- change in the feed water level

## Effects of water hammer

Water hammer causes damage to the affected system. Pipes can burst, pipe brackets may be damaged. Additionally valves, pumps, mounts and other components of the pipe system (e.g. heat exchangers) are at risk. In drinking water pipelines a water hammer can lead to dirty water being drawn in from outside. Since damage to pipelines is not necessarily immediately visible (e.g. a damaged flange), it is necessary to deal with the potential occurrence of water hammer when planning a pipeline.

## Reducing water hammer

At smaller nominal diameters, installing an expansion tank or the choice of valves affects the emergence of water hammer. Valves and gate valves are less affected than shut-off valves and butterfly valves due to longer closing times. Safety valves can protect pipelines from damage caused by water hammer.

Water hammer in pipes with large nominal diameters and large head are mitigated or avoided by slowly operating the slide gate and using surge chambers at the entrance of the pressure pipes (similar to equalisation basins).

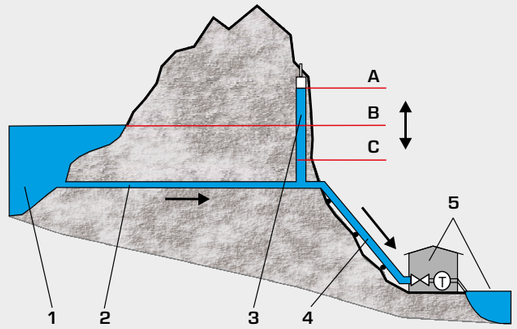


Hydroelectric power station with surge chamber, using the natural geological conditions

**1** reservoir, **2** head race tunnel, **3** surge chamber with variable water level, **4** pressure pipe, **5** turbine house with water discharge;
**A** turbine shutdown, **B** rest position, **C** turbine start up

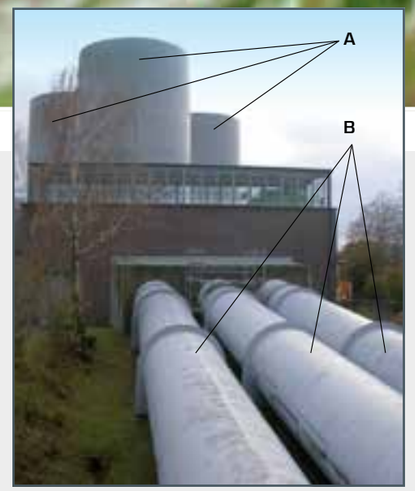


Niederwartha pumped storage power station in Dresden. At the entrance of the three pressure pipes there are three surge chambers, which are designed as open containers.
**A** surge chamber, **B** pressure pipes

## Principle of a surge chamber

Hydroelectric power stations use surge chambers to reduce pressure fluctuations. The water moving through the pressure pipe is deflected when valves in the surge chamber are closed. The water level can then oscillate up and down until it returns to rest. The kinetic energy of the flowing water in the pressure tube is therefore converted into potential energy of the increased water level in the surge chamber and not into destructive pressure energy.

The table shows an abstract from a common university curriculum. GUNT devices cover this content to the greatest extent.

| Curriculum for the field of transient flow | GUNT products |
|---|---|
| **Flow from tanks with variable water level:** discharge velocity | **HM 150.09, HM 150.12** |
| **Water hammer:** investigation of water hammer and pressure waves in pipes, displaying vibrations in the water hammer, determining the speed of sound in water, determining reflection time, measuring water hammer (Joukowsky shock), how flow rate/closing velocity of valves affect water hammer | **HM 155, HM 156, HM 143** |
| **Hydraulic ram:** use of water hammer to pump water | **HM 150.15** |
| **Surge chamber oscillation:** how a surge chamber works, natural frequency of the vibrations | **HM 143, HM 156** |
| **Positive and negative surges/hydropeaking:** transient flow behaviour, e.g. in open channels | **HM 160 to HM 163** |
| **Transient drainage processes:** drainage, delayed drainage processes (retention) | **HM 143** |
| Flood wave | |
| **Transient flow processes in hydraulic turbomachines:** cavitation | **HM 380, ST 250** |

# Devices for experiments in the field of transient flow

## Transient flow in pipes

### Demonstrate water hammer and pressure waves in pipes: HM 155 Water hammer in pipes

- long pipe section for greater reflection times
- water hammer as a function of valve close time

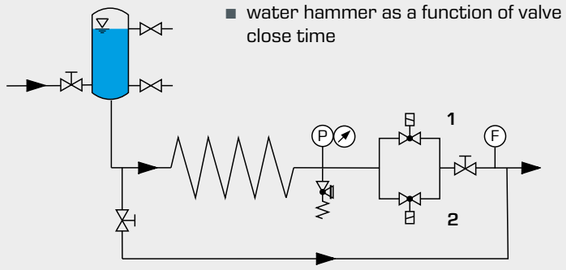


**1** measuring section with adjustable solenoid valve, **2** measuring section with constant magnetic valve, **p** pressure, **F** flow

### Using surge chambers to reduce water hammer: HM 156 Water hammer and surge chamber

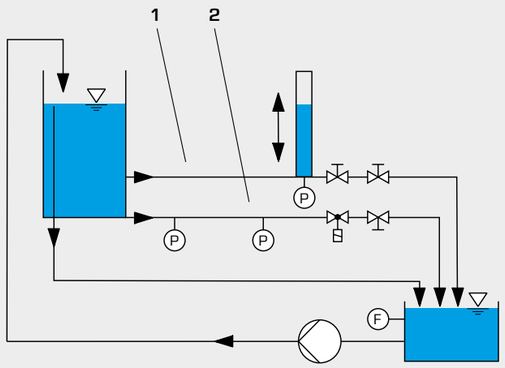


**1** pipe section with ball valve and surge chamber for visualisation of oscillations, **2** pipe section with solenoid valve for measuring water hammer

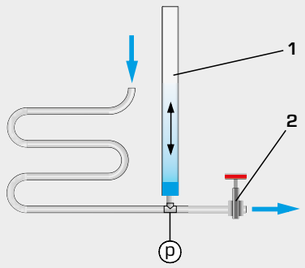


Function of a surge chamber (HM 143)

**1** surge chamber, **2** gate valve, **p** pressure

- operation of a surge chamber
- visualisation of water hammer in transparent surge chambers
- determine natural frequency of the oscillations in the surge chamber

## Simulating transient drainage processes between storage reservoirs

### HM 143 Transient drainage processes in storage reservoirs

- principle of a retention basin
- series connection of two storage reservoirs
- display flow patterns over time

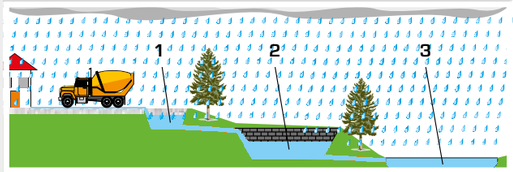


Rainwater retention basin

**1** storm drain
**2** rainwater retention basin
**3** water courses or sewer network

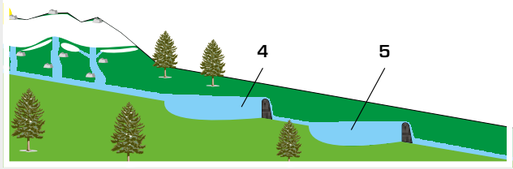


Dam as flood protection

**4** storage reservoir 1
**5** storage reservoir 2

### Data acquisition software for HM 155, HM 156 and HM 143

**GUNT software for optimum support of the learning process**

Graphical representation of

- reflection time and water hammer (HM 155)
- oscillation behaviour (HM 156)
- flow courses (HM 143)

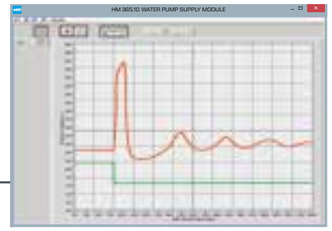

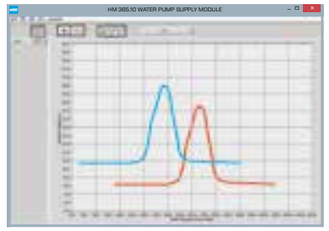

Software screenshots

## Technical use of water hammer

### Demonstrating how a hydraulic ram works: HM 150.15 Hydraulic ram – pumping using water hammer

- use of water hammer to pump water
- function of an air vessel
- optimal observation of the functions through transparent elements

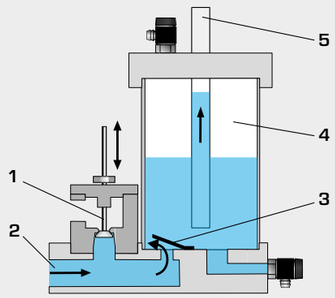


Pumping water

**1** waste valve,
**2** water inlet,
**3** check valve,
**4** air vessel,
**5** rising pipe

# HM 155
## Water hammer in pipes

### Description

- **investigation of water hammer and pressure waves in pipes**
- **60m long pipe section**
- **measuring the velocity of sound in water**
- **solenoid valve with adjustable closing time**
- **GUNT software for displaying the pressure curve**

Water hammer in pipes is a significant problem in engineering as they can cause severe damage to piping, fittings and system components. Water hammer is caused by the inertia effect of the flowing fluid being subjected to an abrupt changes in velocity, e.g. when rapidly closing a valve. Therefore, knowledge about the emergence of water hammer is an important aspect of designing pipework systems.

The HM 155 trainer can be used to study water hammer and pressure waves in long pipelines. Water hammer is generated by closing a valve at the end of the pipe section. The water hammer is then reflected to the beginning of the pipe as an inverted wave. A pressure vessel with air cushion at the start of the pipe section simulates the open beginning of the pipe, so that there is a clear reflection of the wave. In order to achieve reflection times that are large enough, a 60m long pipe section has been installed, which is shaped as a coiled tube to save space.

In experiments, the emergence of water hammer is studied as a function of the valve closing times. The trainer therefore includes two solenoid valves, one with constant closing time and one with adjustable closing time. The resulting pressure oscillations are measured by a pressure sensor and the pressure curve is displayed by the GUNT software.

A valve is used to adjust the flow rate. System pressure and flow rate are displayed. A safety valve protects the system against overpressure.

### Learning objectives/experiments

- water hammer as a function of flow rate
- water hammer as a function of valve closing time
- display pressure curve
- determine reflection time
- calculation of the velocity of sound in water



# HM 155
## Water hammer in pipes

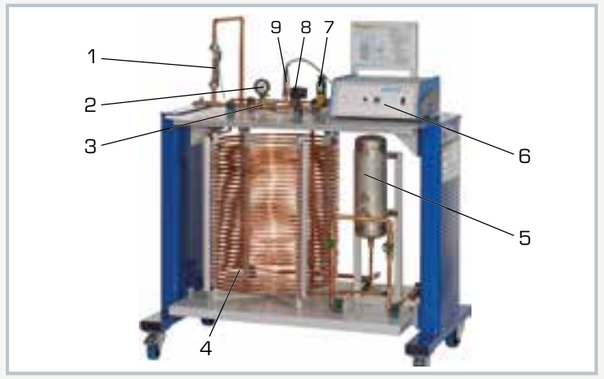


1 flow meter, 2 manometer, 3 valve for flow rate adjustment, 4 pipe section, 5 pressure vessel, 6 control unit, 7 adjustable solenoid valve, 8 constant solenoid valve, 9 pressure sensor

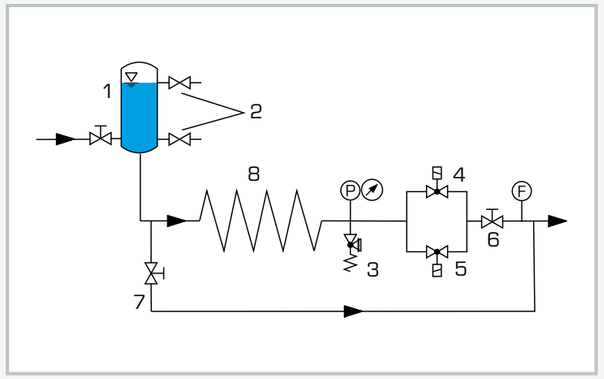


1 pressure vessel with air cushion, 2 valves for adjusting the level, 3 safety valve, 4 adjustable solenoid valve, 5 constant solenoid valve, 6 valve for adjusting flow rate, 7 valve for emptying the pressure vessel, 8 pipe section; P pressure, F flow rate

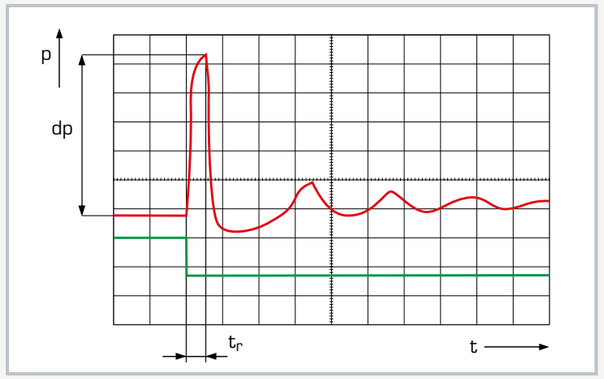


Course of pressure over time at solenoid valve with constant closing time; red: pressure curve, green: trigger signal; p pressure, t time, $t_r$ reflection time, dp: water hammer

### Specification

[1] investigation of water hammer and pressure waves in pipes
[2] pipe section as coiled tube to save space
[3] generation of water hammer via solenoid valve with constant closing time
[4] generation of water hammer via solenoid valve with adjustable closing time
[5] pressure vessel with air cushion reflects the wave
[6] safety valve protects against overpressure in the system
[7] instruments: pressure sensor, rotameter, manometer
[8] representation of the pressure curves and the flow rate with GUNT software
[9] GUNT software for data acquisition via USB under Windows 7, 8.1, 10

### Technical data

Solenoid valve, constant closing time
- closing time: 20...30ms
- operating pressure: 0...10bar

Solenoid valve, adjustable closing time
- closing time: 1...4s
- operating pressure: 0,2...12bar

Safety valve: 16bar

Pipe section, copper
- length: 60m
- inner diameter: 10mm

Pressure vessel: 5L

Measuring ranges
- pressure: 0...16bar
- flow rate: 30...320L/h

230V, 50Hz, 1 phase
230V, 60Hz, 1 phase; 120V, 60Hz, 1 phase
UL/CSA optional
LxWxH: 1310x790x1500mm
Weight: approx. 155kg

### Required for operation

water connection 300L/h, drain
PC with Windows

### Scope of delivery

1 trainer
1 GUNT software CD + USB cable
1 set of hoses
1 set of instructional material

# HM 156
## Water hammer and surge chamber

The illustration shows a similar unit.

### Description

- **visualisation of water hammer**
- **operation of a surge chamber**
- **determining the sound velocity in water**
- **GUNT software for displaying the water hammer and oscillations**

In structures such as hydroelectric power plants, or in systems for supplying water, changes in flow rate result in pressure fluctuations. For example during startup and shutdown of hydraulic machines or by opening and closing shut-off elements. There is a distinction to be made between rapid pressure changes that propagate with the sound velocity (water hammer) and slow pressure changes caused by mass oscillations. Pipeline systems use air vessels or surge chambers to dampen water hammer and mass oscillations.

HM 156 is used to generate and visualise water hammer in pipes and to demonstrate how a surge chamber works. The trainer contains a pipe section with a ball valve and a surge chamber and a second pipe section with a solenoid valve.

In the first experiment a water hammer is produced by rapidly closing the ball valve. The sudden deceleration of the water mass releases kinetic energy, which is converted into potential energy in the surge chamber. The resulting pressure oscillations are measured by a pressure sensor behind the surge chamber and displayed in the software as a pressure curve. The oscillation can also be seen as pendulum movement of the water level in the surge chamber.

In the second experiment a rapid closing of the solenoid valve in the second pipe section produces a strong water hammer. The water's kinetic energy is converted into pressure energy. The water hammer and the subsequent oscillations are detected by two pressure sensors in the pipe section and displayed in the software as a pressure curve.

The water is supplied and the flow rate measured by the supply unit.

### Learning objectives/experiments

- demonstrating water hammer in pipes
- determining the sound velocity in water
- understanding how a surge chamber works
- natural frequency in the surge chamber



# HM 156
## Water hammer and surge chamber

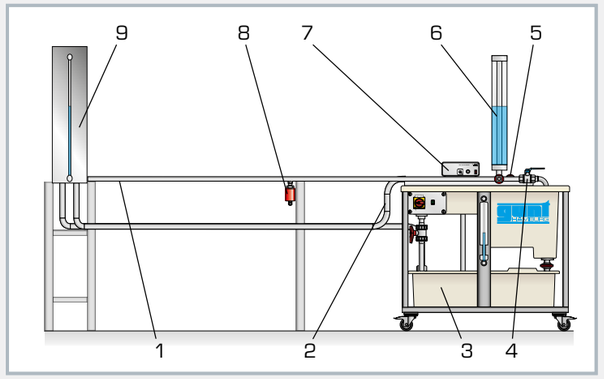


1 two parallel pipe sections, 2 water supply, 3 supply unit, 4 ball valve/solenoid valve, 5 pressure sensor surge chamber, 6 surge chamber, 7 control unit, 8 pressure sensor in the measuring section for water hammer, 9 tank

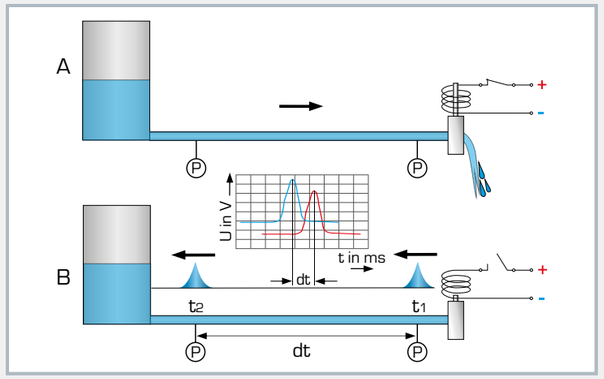


Producing a water hammer; A: solenoid valve open, B:solenoid valve closed; P pressure, t time, U voltage

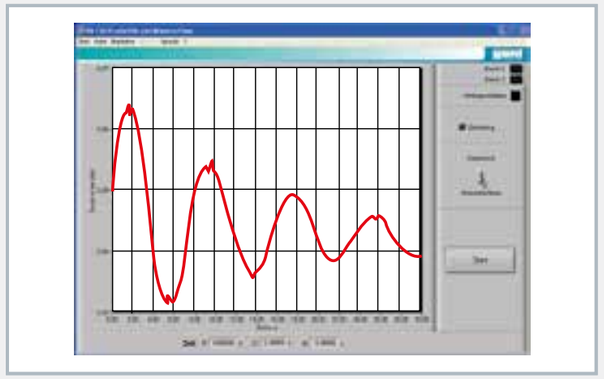

Screenshot of the software

### Specification

[1] functioning of a surge chamber
[2] pipe section with ball valve and surge chamber
[3] surge chamber designed as transparent PMMA tank
[4] pressure sensor behind the water chamber for measuring the pressure wave
[5] pipe section with solenoid valve and two pressure sensors for measuring water hammer
[6] volumetric flow measurement via supply unit
[7] representation of the pressure curves with GUNT software
[8] GUNT software for data acquisition via USB under Windows 7, 8.1, 10

### Technical data

Pipe section for pressure oscillations
- copper
- length: 5875mm, inner diameter: 26mm
- ball valve
- surge chamber, PMMA

Height: 825mm, inner diameter: 50mm

Pipe section for water hammer
- copper
- length: 5875mm, inner diameter: 26mm
- distance between sensors: 3000mm
- solenoid valve, closing time: 20...30ms

Tank: 50L

Supply unit
Pump
- power consumption: 550W
- max. flow rate: 230L/min
- max. head: 11m

Tank: 1x 180L, 1x 40L

Measuring ranges
- pressure (pipe section): 2x 0...16bar abs.
- pressure (surge chamber): 0...0,3bar

230V, 50Hz, 1 phase
230V, 60Hz, 1 phase; 120V, 60Hz, 1 phase
UL/CSA optional
LxWxH: 6800x800x2050mm (total)
Weight: approx.155kg

### Required for operation

PC with Windows

### Scope of delivery

1 trainer with supply unit
1 GUNT software CD + USB cable
1 set of instructional material

# HM 143
## Transient drainage processes in storage reservoirs

### Learning objectives/experiments

- demonstrating transient drainage processes in two rainwater retention basins located one behind the other
- demonstrating transient drainage processes in two storage lakes located one behind the other
- recording oscillations of the water level in a surge chamber after water hammer
- recording and displaying water level fluctuations

### Description

- **investigation of transient drainage processes in storage reservoirs**
- **simulation of rainwater retention basin and storage lakes**
- **transparent surge chamber for observing oscillations after a water hammer**
- **GUNT software for displaying the water levels**

Transient drainage processes are taken into consideration when deciding on the dimensions of storage reservoirs. The processes occur for example, in rainwater retention basins and storage lakes.

The main purpose of the rainwater retention basin is to delay the drainage process by temporary intermediate storage. Storage lakes are used in applications such as water supply, energy conversion, or in flood protection. The water rises before it is fed over an overflow.

The drainage processes from reservoirs is realised by pipelines, tunnels or other means. A surge chamber prevents water hammer in pipes and fittings in the event of rapid changes in flow rate.

HM 143 is used to demonstrate transient drainage processes from storage reservoirs and how a surge chamber works. The trainer includes a basin with adjustable weir and a second, deeper-lying basin with overflow and drainage line. A surge chamber is installed in the drainage line.

In the "rainwater retention basin" experiment basin A and basin B simulate retention basins. The discharge is adjusted by using valves in the drainage line. This illustrates typical delayed drainage processes.

In the experiment "storage lakes", the transient drainage processes are shown in two long-term storage reservoirs. In this experiment the weir is used as a free overfall weir.

In the "surge chamber" experiment a water hammer is produced by rapidly closing a gate in the drainage line. The oscillation can be seen as pendulum movement of the water level in the surge chamber.

The water levels in the basins and at the surge chamber are detected by pressure sensors and displayed using the GUNT software.



HM 143
Transient drainage processes in storage reservoirs

1 basin A with adjustable weir, 2 surge chamber, 3 valve in drain pipe, 4 gate for generating water hammer, 5 water connection, 6 overflow pipe, 7 basin B with overflow, 8 flow meter

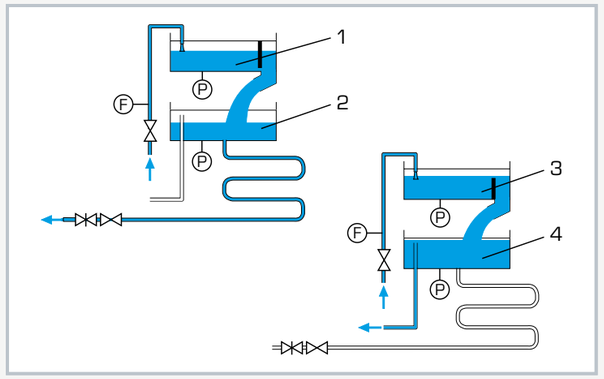


Top: "rainwater retention basin": 1 basin A as drainage channel with gate, 2 basin B as rainwater retention basin; bottom: "storage lakes"; 3 basin A as storage reservoir with weir, 4 basin B as storage reservoir with overflow; F flow rate, P pressure

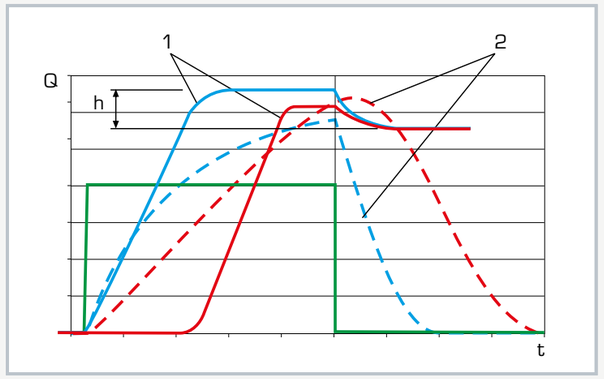


Transient drainage processes; blue: basin A, red: basin B, green: water supply; Q discharge, t time, h head; 1: "storage lakes", 2: "rainwater retention basin" with delayed drainage process

### Specification

[1] transient drainage processes in storage reservoirs
[2] functioning of a surge chamber
[3] "rainwater retention basin" experiment: basin A and basin B as short-term storage reservoirs, rectangular weir as gate
[4] "storage lakes" experiment: basin A and basin B are used as long-term storage reservoirs, rectangular weir as overfall weir
[5] "surge chamber" experiment: transparent pipe as surge chamber in drainage line of basin B
[6] gate in the drainage line for generating water hammer
[7] pressure sensors at both basins and the surge chamber capture the water level fluctuations
[8] representation of the variation in the water levels with GUNT software
[9] GUNT software for data acquisition via USB under Windows 7, 8.1, 10

### Technical data

Basin A: LxWxH: 900x900x300mm
- material: stainless steel
- rectangular weir according to Rehbock, adjustable
  - as gate, gate opening: 0...200mm
  - as weir, weir height: 0...200mm
  - overflowed width: 60mm

Basin B: LxWxH: 900x900x300mm
- material: stainless steel
- overflow: 200mm

Surge chamber
- material: PMMA
- inner diameter: 62mm
- height: 1800mm

Measuring ranges
- pressure: 2x 0...100mbar, 1x 0...200mbar
- flow rate: 300...3300L/h

230V, 50Hz, 1 phase
230V, 60Hz, 1 phase; 120V, 60Hz, 1 phase
UL/CSA optional
LxWxH: 1040x1220x2100mm
Weight: approx. 165kg

### Required for operation

water connection, drain: 3000L/h
PC with Windows

### Scope of delivery

1 trainer
1 GUNT software CD + USB cable
1 set of instructional material

# HM 150.15
## Hydraulic ram – pumping using water hammer

### Learning objectives/experiments

- demonstrate formation and effect of water hammer
- principle of a ram
- function of an air vessel
- effect of air volume in the air vessel and the flow velocity on the pump behaviour
- efficiency analysis

### Description

- **formation and effect of water hammer**
- **principle of a ram**
- **transparent tank and visible check valve for optimal observation of the function**

Abruptly interrupting the water flow can cause water hammer in the pipeline. This generally undesired effect is used specifically in special equipment (hydraulic ram) to raise water to a higher level. Unlike conventional pumps, no additional mechanical drive is required here.

HM 150.15 can be used to demonstrate the formation and effect of water hammer and to study how a hydraulic ram works. The water is fed to the ram via a long pipe at a gradient.

Above a certain water velocity the waste valve in the ram closes automatically, due to the flow forces. This happens suddenly, so that the kinetic energy of the water in the pipe is converted into potential pressure energy. The pressure opens a check valve and the water flows into an air vessel. The air cushion in the air vessel dampens the water hammer and ensures a uniform lift into the elevated tank. After the water hammer has subsided, the waste valve opens due to the dead weight, the water in the pipe starts to flow again and the process repeats itself.

The operation of the waste valve as a function of the weight load, the valve lift and the flow rate is studied. Furthermore, it is possible to shown how the volume of air in the air vessel affects the lift.

Valves are used to adjust the flow rate. Transparent tank, a visible check valve in the air vessel and the visible movement of the waste valve all permit excellent observation of the function. All components are clearly mounted on a front plate.

The water is supplied and flow rate measured by the base module HM 150. Alternatively, the experimental unit can be operated by the laboratory supply.



HM 150.15
Hydraulic ram – pumping using water hammer

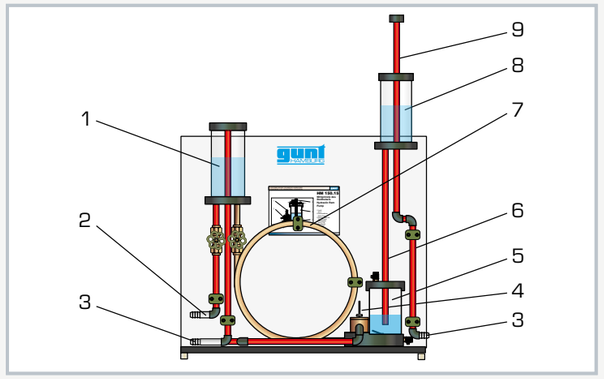


1 inlet tank with fixed overflow, 2 water connection, 3 water discharge, 4 waste valve with lift, 5 air vessel with air volume and check valve, 6 riser, 7 pipe, 8 elevated tank, 9 adjustable overflow

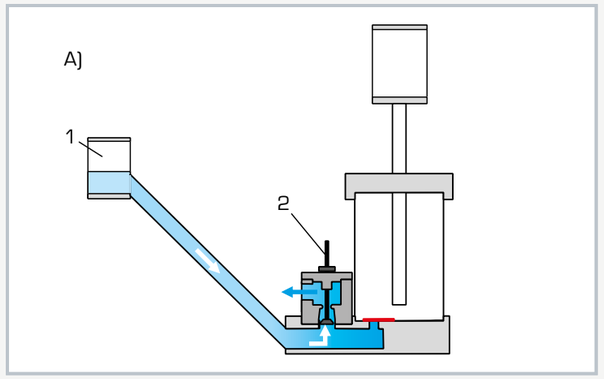


Principle of operation of a hydraulic ram: A) waste valve open, check valve closed, water outlet through waste valve; 1 inlet tank, 2 waste valve

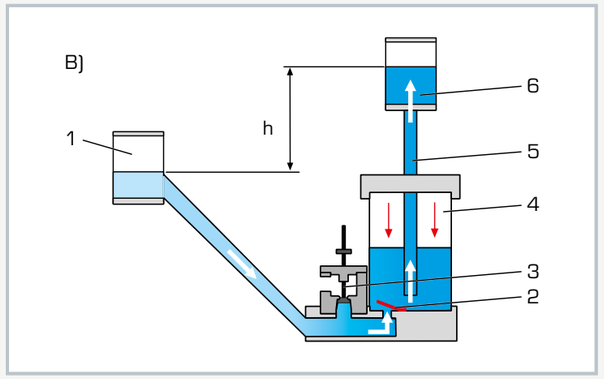


B) waste valve closed, check valve open, water inlet to air vessel and elevated tank; 1 inlet tank, 2 check valve, 3 waste valve, 4 air vessel with air volume, 5 riser, 6 elevated tank; h head

### Specification

[1] formation and effect of water hammer
[2] pumping using water hammer
[3] fixed overflow tank is used as a water source, e.g. river, pool
[4] elevated tank with variable pump head
[5] waste valve with adjustable lift, closes cyclically due to flow force of the water
[6] tank with check valve and air volume is used as an air vessel
[7] air volume in the air vessel is varied by vent valve
[8] flow rate measurement using base module HM 150
[9] closed water supply using base module HM 150 or via lab supply

### Technical data

Ram
- max. head 0,27m
- max. flow rate: 90L/h

LxWxH: 1100x640x1400mm
Weight: approx. 57kg

### Required for operation

HM 150 (closed water circuit) or water connection, drain

### Scope of delivery

1 experimental unit
1 set of hoses
1 set of weights
1 set of instructional material

# HM 150
## Base module for experiments in fluid mechanics

### Description

- **water supply for experimental units for fluid mechanics**
- **volumetric flow rate measurement for large and small flow rates**
- **comprehensive range of accessories allows a complete course in the fundamentals of fluid mechanics**

The HM 150 series of devices permits a varied experimental cross-section in the fundamentals of fluid mechanics. The base module HM 150 provides the basic equipment for individual experiments: the supply of water in the closed circuit; the determination of volumetric flow rate and the positioning of the experimental unit on the working surface of the base module and the collection of dripping water.

The closed water circuit consists of the underlying storage tank with a powerful submersible pump and the measuring tank arranged above, in which the returning water is collected.

The measuring tank is stepped, for larger and smaller volumetric flow rates. A measuring beaker is used for very small volumetric flow rates. The volumetric flow rates are measured using a stopwatch.

The top work surface enables the various experimental units to be easily and safely positioned. A small flume is integrated in the work surface, in which experiments with weirs (HM 150.03) are conducted.



HM 150
Base module for experiments in fluid mechanics

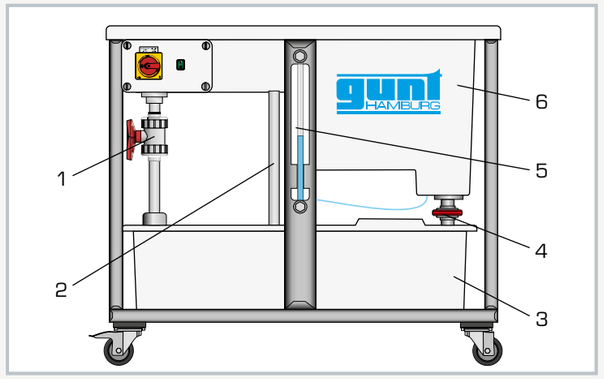


1 flow control valve, 2 overflow, 3 storage tank with submersible pump, 4 gate valve for emptying the measuring tank, 5 measuring tank level indicator, 6 measuring tank

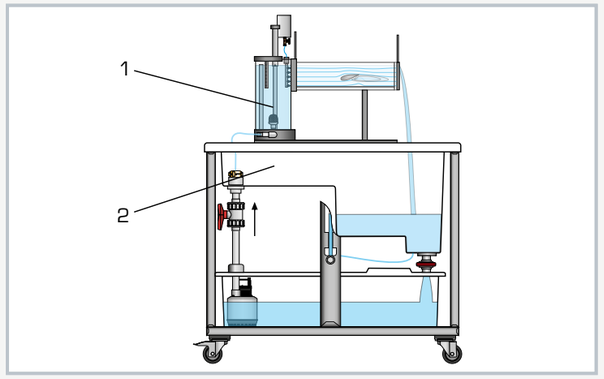


HM 150.21 (1) placed on the base module HM 150 (2)

Base module for experiments in fluid mechanics with plate weir HM 150.03

### Specification

[1] base module for supplying experimental units in fluid mechanics
[2] closed water circuit with storage tank, submersible pump and measuring tank
[3] measuring tank divided in two for volumetric flow rate measurements
[4] measuring beaker with scale for very small volumetric flow rates
[5] measurement of volumetric flow rates by using a stopwatch
[6] work surface with integrated flume for experiments with weirs
[7] work surface with inside edge for safe placement of the accessory and for collecting the dripping water
[8] storage tank, measuring tank and work surface made of GRP

### Technical data

Pump
- power consumption: 250W
- max. flow rate: 150L/min
- max. head: 7,6m

Storage tank, capacity: 180L

Measuring tank
- at large volumetric flow rates: 40L
- at small volumetric flow rates: 10L

Flume
- LxWxH: 530x150x180mm

Measuring beaker with scale for very small volumetric flow rates
- capacity: 2L

Stopwatch
- measuring range: 0...9h 59min 59sec

230V, 50Hz, 1 phase
230V, 60Hz, 1 phase; 120V, 60Hz, 1 phase
UL/CSA optional
LxWxH: 1230x770x1070mm
Weight: approx. 82kg

### Scope of delivery

1 base module
1 stopwatch
1 measuring cup
1 hose
1 manual

# 5 Hydraulic fluid energy machines

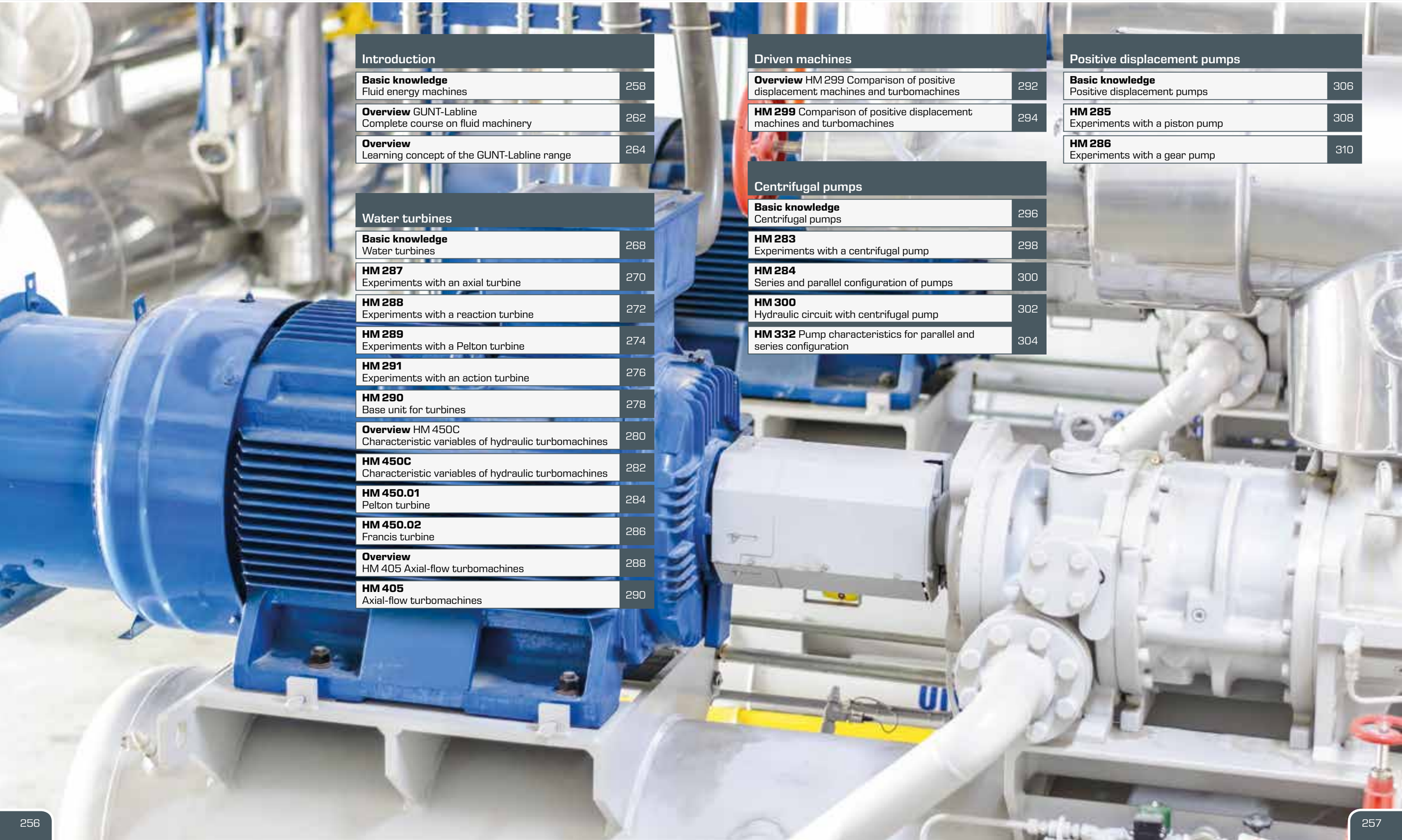

## Introduction


**Basic knowledge** Fluid energy machines 258

**Overview** GUNT-Labline Complete course on fluid machinery 262

**Overview** Learning concept of the GUNT-Labline range 264


## Water turbines


**Basic knowledge** Water turbines 268

**HM 287** Experiments with an axial turbine 270

**HM 288** Experiments with a reaction turbine 272

**HM 289** Experiments with a Pelton turbine 274

**HM 291** Experiments with an action turbine 276

**HM 290** Base unit for turbines 278

**Overview** HM 450C Characteristic variables of hydraulic turbomachines 280

**HM 450C** Characteristic variables of hydraulic turbomachines 282

**HM 450.01** Pelton turbine 284

**HM 450.02** Francis turbine 286

**Overview** HM 405 Axial-flow turbomachines 288

**HM 405** Axial-flow turbomachines 290


## Driven machines


**Overview** HM 299 Comparison of positive displacement machines and turbomachines 292

**HM 299** Comparison of positive displacement machines and turbomachines 294


## Centrifugal pumps


**Basic knowledge** Centrifugal pumps 296

**HM 283** Experiments with a centrifugal pump 298

**HM 284** Series and parallel configuration of pumps 300

**HM 300** Hydraulic circuit with centrifugal pump 302

**HM 332** Pump characteristics for parallel and series configuration 304


## Positive displacement pumps


**Basic knowledge** Positive displacement pumps 306

**HM 285** Experiments with a piston pump 308

**HM 286** Experiments with a gear pump 310

Basic knowledge

# Fluid energy machines

**Fluid energy machines** are the most important field of application of fluid mechanics and thermodynamics. Thus they compose the most significant group of machines and engines. They can be found in all areas of everyday life.

In the form of pumps, compressors and fans they enable the transport of liquid and gaseous media. As water and wind turbines they are used to supply environmentally friendly energy. In the form of steam turbines, gas turbines or engines, they convert chemical or thermal energy into mechanical energy, thus ensuring our electrical energy supply. Ship or aircraft propellers as well as torque converters in cars or locomotives are also fluid energy machines.

Therefore, knowledge of the function, structure, properties and operation of fluid energy machines is an important aspect of engineering education.

GUNT offers a wide range of different fluid energy machines for educational purposes:

- catalogue 3 covers the thermal fluid energy machines
- catalogue 4 focuses on hydraulic turbomachines
- catalogue 4a provides an overview of the entire range of fluid energy machines

**Fluid energy machines** allow a transfer of mechanical energy to the fluid and vice versa. They are energy transformers and are divided into:

**Hydraulic machines**
The fluid is incompressible. The density of the fluid is constant. It is a liquid. The fluid is placed under pressure and pumped by applying mechanical energy. Or the pressure and the flow energy of the fluid are converted into mechanical energy.

**Thermal machines**
The fluid is gaseous and compressible. It changes pressure, volume and temperature under application of mechanical energy. Thus mechanical energy can be converted into thermal energy and vice versa. Applications include driving machine such as steam turbines or compressors in refrigeration systems.

In **turbomachines** the energy is transferred between fluid and turbomachine via flow forces.

In the case of **piston machines**, which belong to the group of positive displacement machines, the energy is transferred via displacement of the fluid.

## Classification of fluid energy machines

**Fluid energy machines**

- **Turbomachines**
  - **Hydraulic machines** – incompressible fluids
    - **Driving machines**: water turbines
    - **Driven machines**: centrifugal pumps
  - **Thermal machines** – compressible fluids
    - **Driving machines**: steam turbines; gas turbines
    - **Driven machines**: turbo compressors
- **Positive displacement machines**
  - **Hydraulic machines** – incompressible fluids
    - **Driving machines**: hydraulic engines
    - **Driven machines**: reciprocating piston pumps; diaphragm pumps; rotary positive displacement pumps
  - **Thermal machines** – compressible fluids
    - **Driving machines**: internal combustion engines; stirling engines
    - **Driven machines**: piston compressors; screw compressors; vane compressors

Definitions

**Fluid energy machine:** a fluid is used as the working medium (liquid or gas).
**Turbomachine:** the energy is transferred between the flowing fluid and the turbomachine via a momentum exchange with a rotor.
**Positive displacement machine:** the energy is transferred bewteen fluid and positive displacement machine via a variable volume. The volume is varied by a displacer.
**Driven machine:** mechanical energy is added to the fluid.
**Driving machine:** mechanical energy is extracted from the fluid.
**Incompressible fluids:** liquids, constant density of the fluid.
**Compressible fluids:** gaseous fluids that change pressure, volume and temperature under application of mechanical energy, constant density of the fluid.

## Real-world applications

Assembling a steam turbine

Boiler feed pump of a power station

Using a Pelton turbine in a power station

# Fluid energy machines

The table shows an extract from a common university curriculum.
GUNT devices cover this content to the greatest extent.

| Learning objectives for the field of hydraulic fluid energy machines | |
|---|---|
| **Basic principles** | |
| Fluid mechanics | equipment from chapter 1 and 2 |
| Thermodynamics | equipment from catalogue 3 |
| Working fluid (incompressible, compressible) | HM 299, GUNT-Labline |
| Types (turbomachines, positive displacement machines) | HM 299, GUNT-Labline |
| Energy transfer | HM 405, HM 450C, GUNT-Labline |
| Velocity | HM 405, HM 215 (chapter 7) |
| Volumetric flow rate | HM 405 |
| Output | HM 405, HM 450C, GUNT-Labline |
| Efficiency | HM 405, HM 450C, GUNT-Labline |
| Speed | HM 405, HM 450C, GUNT-Labline |
| **Turbomachines** | |
| Energy conversion in the impeller | HM 405 |
| Axial or radial flow through | equipment from catalogue 4a |
| Similarity and characteristic figures | HM 405, GUNT-Labline |
| **Positive displacement machines** | |
| Piston pumps | HM 285, HM 299 |
| Gear pumps | HM 286 |
| **Driving machines** | |
| Water turbines (Pelton, Francis, Kaplan) | HM 287, HM 288, HM 289, HM 291, HM 450.01, HM 450.02, HM 450C |
| **Driven machines** | |
| Centrifugal pumps (axial/radial, single stage/multi-stage) | HM 283, HM 284 HM 300, HM 332 |

## Real-world application of hydraulic fluid energy machines

Hydraulic turbomachines include water turbines. The turbine is coupled to a generator. The mechanical rotational energy of the turbine is converted into electrical energy.

Real-world applications for turbines can be found in power stations: hydroelectric power plants use Kaplan turbines, Francis turbines or free-jet turbine such as the Pelton turbine. Wind turbines can be found in wind power stations.

The reversal of the principle of the turbine is the conversion of rotational energy into flow energy; this is applied in compressors and pumps.

These devices are very large and powerful in real-world applications: a full-scale Pelton turbine has a diameter of several meters.

In most cases the device cannot be recognised as such due to the fact it is installed within the system. Nevertheless, to enable students to put their theoretical knowledge in the field of fluid energy machines into practice, GUNT has developed a range of equipment in the laboratory scale on this topic:

The benefit of GUNT devices is the small, compact design. The mobile devices can be used both for demonstration purposes in the lecture hall and for experimental purposes in the laboratory. Only a power connection and in some cases a water connection are required for operation. Despite their small, compact design the devices largely offer the same features as a real full-scale device with the corresponding restriction in performance and implementation.

Kaplan water turbine

Pelton turbine

Centrifugal pump, multi-stage

# GUNT-Labline
# Complete course on fluid machinery

The GUNT-Labline "Fluid Energy Machines" allows an easy introduction to a complex subject. The experimental units offer basic experiments to familiarise students with the function, the operating behaviour and the most important characteristics of positive displacement and turbomachines. Transparent housings allow observation during operation. The GUNT-Labline comes with microprocessor-based metrology and a device-specific GUNT software for control and data acquisition via USB.

### Advantages of the device conception:

- the compact design enables mobile use of the experimental units
- easy transport thanks to handles on the tabletop devices and rollers on the frame
- the same device can be used for demonstration purposes in the lecture hall or the classroom or to conduct experiments in the laboratory
- only a power connection is required for operation of the equipment
- no external water supply required thanks to closed water circuits
- despite complex metrology and software analysis, the devices do not require any complicated wiring: a USB connection to the computer is sufficient
- transparent housing and clear arrangement provide an excellent insight on the functions of the components and on the procedures for operation of the equipment
- damage caused by incorrect operation is very rare thanks to the way in which the devices are designed
- the compact size of the experimental units and the low price make it easy to fit out a classroom or laboratory with a larger number of experiment workstations

### Ideas in the didactic concept:

- a self-contained course on the topic of fluid energy machines
- the experimental units of one sub-field complement each other in terms of learning objectives
- each experimental unit forms a self-contained learning unit
- effective learning in small groups (2-3 people)
- the direct proximity to the experimental unit encourages inquisitive exploration of the technology
- development of characteristic properties of various types of machines
- comparison and evaluation of different types of machines

In addition, the common fundamentals of the experimental techniques can be practised, for example:

- selecting the chart axes
- selecting the increment when varying parameters
- waiting for the steady state
- averaging over time with fluctuating readings, etc.

## Experiments for different fans and a radial compressor

**HM 280**
Experiments with a radial fan

**HM 282**
Experiments with an axial fan

**HM 292**
Experiments with a radial compressor

## Experiments for different water turbines

**HM 289**
Experiments with a Pelton turbine

**HM 291**
Experiments with an action turbine

**HM 287**
Experiments with an axial turbine

**HM 288**
Experiments with a reaction turbine

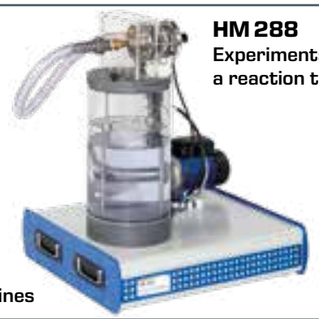

**HM 290**
Base unit for turbines

## Experiments for centrifugal and positive displacement pumps

**HM 283**
Experiments with a centrifugal pump

**HM 285**
Experiments with a piston pump

**HM 284**
Series and parallel connected pumps

**HM 286**
Experiments with a gear pump

# Learning concept of the GUNT-Labline range

## Advantages of the learning concept

In order to enable optimal teaching in the demanding field of fluid energy machines, we have developed a learning concept that perfectly combines the various advantages of mechanical models, device-specific software and the instructional material.

Simple and clear mechanical models of the machines are connected to the PC via USB. Operation, measurement, display and analysis of measurement data are all carried out on the PC. To this end, the electronic data acquisition and control components are fully integrated into the models. The PC is therefore an integral part of the system. We call this the Hardware-Software Integration approach, or HSI for short.

The experimental units represent self-contained learning units, complementing the experimental units from a sub-field in terms of the learning objectives. During the experiments, importance is placed on the development of characteristic properties of the various types of machine. This allows the students to perform an evaluative comparison of the machine types and to assimilate criteria for later work in practice. The advantages and disadvantages of different types of machines can be demonstrated and discussed.

### Mechanical model

Housing, pipes and tanks are transparent and provide a view of the key components and flow processes during operation (vortex, air bubbles, cavitation). Operating and flow noise and vibrations produce a realistic impression.

All this makes the function and processes in a machine understandable and guarantees a sustainable learning experience.

Water jet in the reaction turbine HM 288

### Instructional material in paper form

A fundamental section with the relevant theory and model-based experiment instructions allow an intensive preparation for the experiment. Sample experiment results allow a qualified assessment of the students' own results.

Our didactic materials offer excellent support when preparing lessons, when conducting the experiments and when reviewing the experiment.

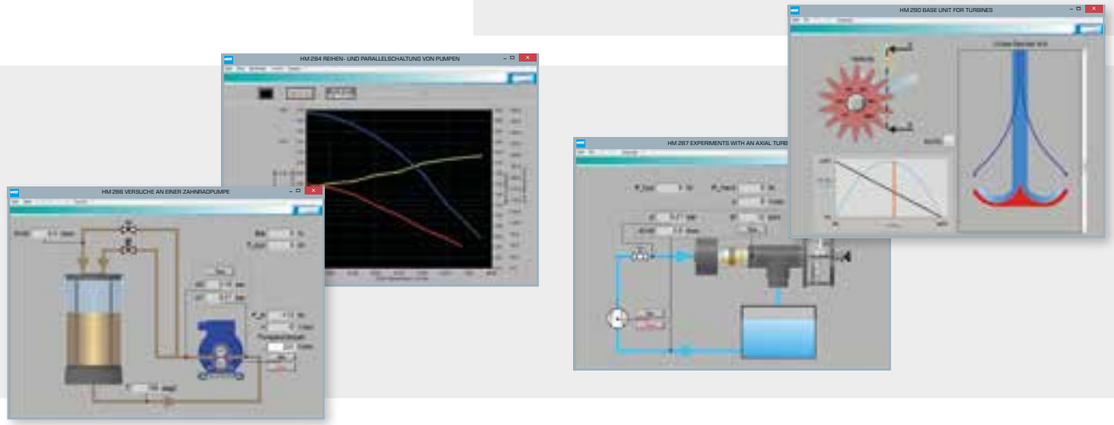

### Device-specific GUNT software

The software forms a bridge between the mechanical model and the instructional material in paper form.

The software reflects the behaviour of the machine in specific measurements. The machine's behaviour can be studied and discussed in form of characteristic curves. Through simulation, the software provides the ability to visualise flow processes that cannot be seen and to show them in slow motion.

In particular the energy conversion between a mechanical component and a fluid in a fluid energy machine is easily understood.

# Learning concept of the GUNT-Labline range

## A wide range of experiments with a variety of options

**Device-specific GUNT software, together with the microprocessor, provides software-based experiment execution and assessment**

- record typical characteristic curves
- measurement of the mechanical, electrical and hydraulic power as well as power consumption
- determine the efficiency
- effect of speed on pressure and flow rate
- advantages and disadvantages of various fluid energy machines
- how the impeller shape affects the characteristic and efficiency
- occurrence of cavitation
- function of an air vessel

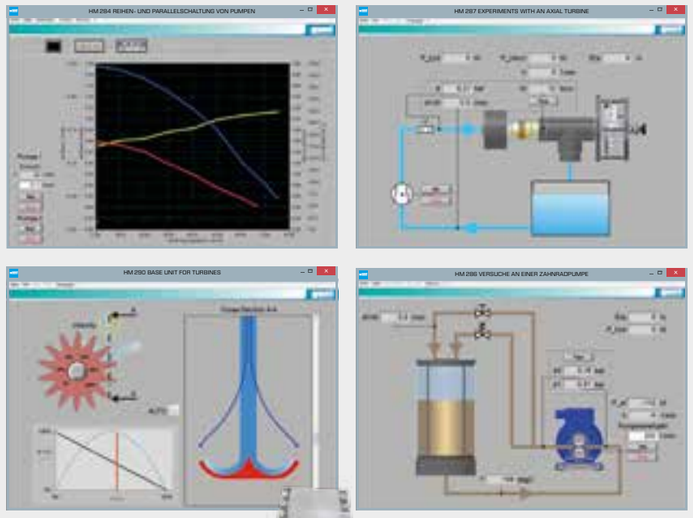

## Overview of the topics

### Fans, compressors

- typical dependence of pressure on speed
- typical dependence of flow rate on speed
- hydraulic power output and efficiency

**HM 280**
**Experiments with a radial fan**

- characteristic of a radial fan
- effect of the impeller shape

**HM 282**
**Experiments with an axial fan**

- characteristic of an axial fan
- stall

**HM 292**
**Experiments with a radial compressor**

- characteristic of a 2-stage radial compressor
- stage pressure ratio
- temperature increase

### Pumps

- powers and efficiency

**HM 283**
**Experiments with a centrifugal pump**

- typical dependence of pressure and flow rate on the speed
- characteristic of a centrifugal pump
- effect of direction of rotation
- cavitation

**HM 284**
**Series and parallel connected pumps**

- individual and overall characteristics
- advantages and disadvantages of series and parallel connections
- efficiency considerations and areas of application

**HM 285**
**Experiments with a piston pump**

- typical characteristic of a displacement pump
- cyclical pump process over time
- p,V diagram and internal power
- pulsation and air vessel
- mechanical drive power

**HM 286**
**Experiments with a gear pump**

- typical dependence of pressure and flow rate on the speed
- pressure limitation
- characteristic of a displacement pump

### Turbines

- torque/speed characteristic curve
- hydraulic input power, mechanical output power
- efficiency

**HM 287**
**Experiments with an axial turbine**

- power regulation

**HM 288**
**Experiments with a reaction turbine**

- partial load behaviour

**HM 289**
**Experiments with a Pelton turbine**

- partial load behaviour with needle adjustment compared to a throttle control

**HM 291**
**Experiments with an action turbine**

- partial load behaviour with regulation via number of nozzles compared to a throttle control

Basic knowledge

# Water turbines

## Basic principles of water turbines

Water turbines are mainly used in power plants to generate electrical energy. To this end, river barrages or dams use the gravitational potential energy of the dammed water, also known as pressure energy. One special application is the use in pumped storage power plants. In times of low electricity demand an elevated storage reservoir is filled with water by means of electrically driven pumps. When electricity demand is higher, the reservoir is drained and additional electricity generated by water turbines.

Water turbines are turbomachines. They convert the potential energy of the water into mechanical work. The gravitational potential energy is first converted into kinetic energy. The flowing water is accelerated to as high a speed as possible in a distributor or a nozzle. The momentum of the fluid is made usable as peripheral force by deflection in a rotor.

Depending on the location of the energy conversion a distinction is made between:

**Action turbine:** All of the potential energy is converted into velocity in the fixed distributor. There is no pressure gradient between the rotor inlet and the rotor outlet. The flow is only deflected in the rotor.
**Example: Pelton turbine**

**Reaction turbine:** The potential energy is converted partly in the distributor and partly in the rotor. In the rotor there is a pressure difference between inlet and outlet. The flow is deflected and accelerated in the rotor.
**Examples: Francis turbine and Kaplan turbine**

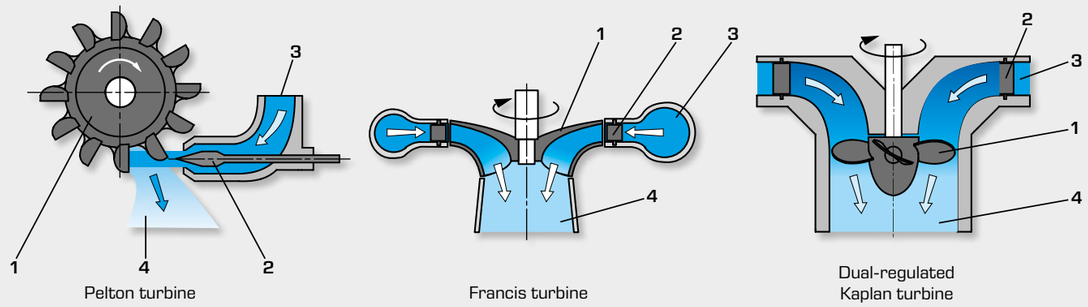


**1** rotor, **2** distributor, **3** water inlet, **4** water outlet

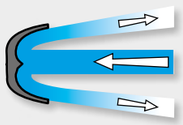

Action turbine (Pelton)

Pure deflection of the water jet in the guide vane without changing the speed

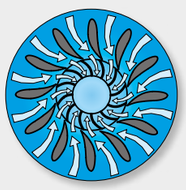

Reaction turbine (Francis)

Flow cross-section are changed. Acceleration of the water jet in guide vanes and blades

The individual turbine types have different fields of application

- Pelton turbine: very high heads, 130 m to 2000 m, dams, mountain reservoirs
- Francis turbine: average height of fall, 40 m to 730 m, dams, run-of-river power plants
- Kaplan turbine: small height of fall, 5 m to 80 m, run-of-river power plants

The drop heights stated above apply for high outputs. At low outputs the height of fall may be significantly lower. Run-of-river power plants are hydroelectric power plants without reservoirs that can be used for the operating water.

## Characteristics of water turbines

The specific speed $n_q$ is the most important characteristic for water turbines. It is a measure of the ratio of water velocity to rotational speed. A distinction is made between low-speed turbines, where the water velocity is significantly higher than the peripheral speed, and high-speed turbines, where the situation is reversed.

$$n_q = n \cdot \frac{\sqrt{Q}}{H^{3/4}}$$

Here, **n** is the rotational speed, **Q** the flow rate and **H** the head of the water turbine. The ratios are made clear in the velocity triangle. The following list shows the velocity triangles for the inlet side of the rotor. $c_1$ is the absolute velocity, $w_1$ the relative velocity of the water and $u_1$ the peripheral speed of the rotor.

| Specific speed | | Velocity triangle | Rotor shape |
|---|---|---|---|
| $n_q = 10$ | Low-speed turbine | 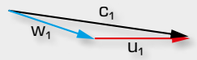 | Pelton turbine |
| $n_q = 30$ | | 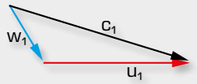 | Francis turbine, low-speed |
| $n_q = 90$ | | 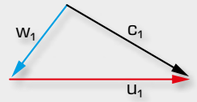 | Francis turbine, high-speed |
| $n_q = 200$ | High-speed turbine | | Kaplan turbine |

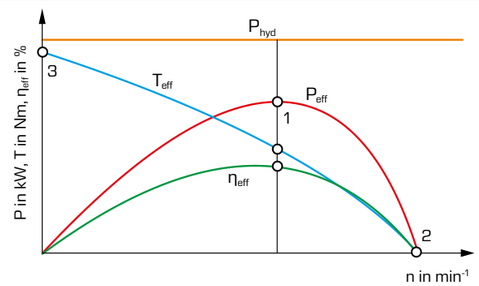


Speed-torque characteristic of a water turbine

$P_{hyd}$ hydraulic input power of the turbine,
$P_{eff}$ mechanical power generated in the rotor,
$T_{eff}$ torque on the rotor,
$\eta_{eff}$ efficiency of the turbine, **n** speed

### Operating behaviour and operating points of a water turbine

The turbine characteristic curve shows the typical behaviour of a water turbine.

The water turbine is preferably operated at the operating point (**1**), where it has the highest efficiency. The torque in a Pelton turbine corresponds to roughly half of the stall torque (**3**). The turbine speeds up to the runaway speed (**2**) when it is not under load. This overspeed can be up to twice the design speed and may result in severe damage to the turbine. A speed controller must prevent this by closing the distributor and throttling the water supply.

# HM 287
## Experiments with an axial turbine

### Description

- **illustrative model of an axial turbine**
- **transparent turbine housing**
- **adjustable, wear-free eddy current brake as turbine load**
- **GUNT software for data acquisition, visualisation and operation**
- **part of the GUNT-Labline fluid energy machines**

The axial turbine operates as a reaction turbine as used in gas tubines and steam turbines. The water flows through a stator where it is deflected and accelerated. Then, the water hits then the blades where it delivers kinetic energy and pressure energy and puts the rotor in motion. The water pressure steadily decreases from the inlet to the outlet.

The trainer provides the basic experiments to get to know the operating behaviour and the most important characteristic variables of axial turbines.

HM 287 features a closed water circuit with an axial turbine, a centrifugal pump and a water tank. The stator and the rotor of the turbine are mounted in a transparent housing and can be observed during operation.

The loading device is outside of the housing. The eddy current brake generates a defined load. The eddy current brake is specially developed by GUNT. It is wear-free and can be finely adusted. The flow rate is adjusted using a valve.

The trainer is fitted with a sensor for pressure (turbine inlet). The torque produced by the turbine is determined via an electronic force sensor. The speed is measured with an optical speed sensor. The flow rate is determined by an orifice plate with differential pressure measurement. The microprocessor-based measuring technique is well protected in the housing. The measured values are transmitted directly to a PC via USB where they can be analysed using the software included.

All the advantages of software-supported experiments with operation and evaluation are offered by the GUNT software and the microprocessor.

### Learning objectives/experiments

- principle of operation of an axial turbine
- determination of the power output
- determination of the efficiency
- recording of the characteristic curve
- comparison of experiment and calculation



HM 287
Experiments with an axial turbine

1 valve for adjusting the flow rate, 2 switch cabinet, 3 flow rate measurement with measuring orfice and differential pressure measurement, 4 pump, 5 tank, 6 eddy current brake, 7 axial turbine

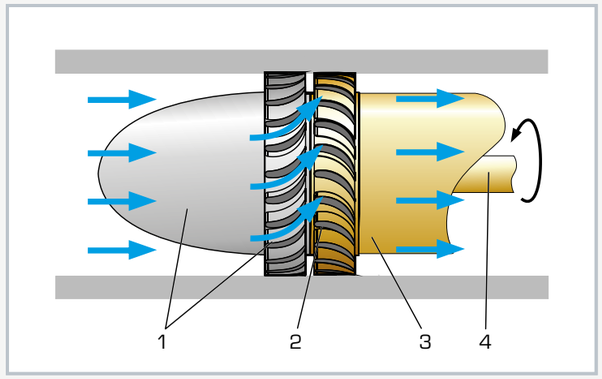


Principle of operation of an axial turbine: 1 stator, 2 rotor, 3 housing, 4 shaft

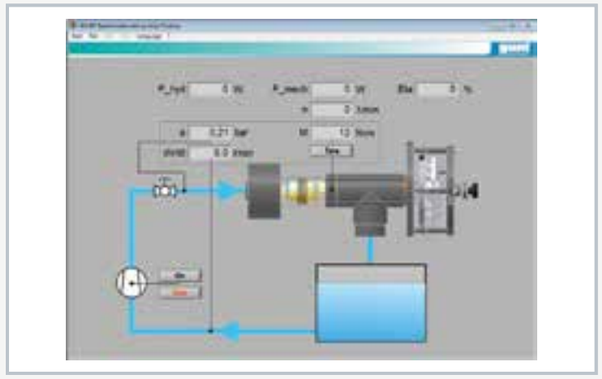

Operating interface of the powerful software

### Specification

[1] functioning and operating behaviour of an axial turbine
[2] closed water circuit contains axial turbine, pump and water tank
[3] transparent housing for observing the stator and the rotor
[4] turbine load using the wear-free and adjustable eddy current brake
[5] valve for adjusting the volumetric flow rate
[6] force sensor to determine the torque on turbine shaft
[7] measurement of turbine speed with optical speed sensor
[8] pressure measurement on inlet side
[9] determination of volumetric flow rate using differential pressure measurement across a measuring orifice
[10] microprocessor-based measuring technique
[11] display and evaluation of the measured values as well as operation of the unit via software
[12] GUNT software with control functions and data acquisition via USB under Windows 7, 8.1, 10

### Technical data

Axial turbine
- power output: approx. 130W at 3500min$^{-1}$
- rotor, outer diameter: 50mm
- blade length: 5mm

Pump
- power consumption: 1,02kW
- max. flow rate: approx. 375L/min
- max. head: 13,7m

Measuring orifice
- diameter: 44mm
- differential pressure sensor: 0...0,1bar

Measuring ranges
- flow rate: 500L/min
- pressure (inlet): 0...5bar
- torque: 0...2Nm

230V, 50Hz, 1 phase
120V, 60Hz, 1 phase
UL/CSA optional
LxWxH: 1200x800x950mm
Weight: approx. 135kg

### Required for operation

PC with Windows

### Scope of delivery

1 trainer
1 GUNT software CD + USB cable
1 set of instructional material

# HM 288
## Experiments with a reaction turbine

The illustration shows HM 288 on top of the water tank in HM 290.

### Description

- **illustrative model of a water turbine according to the reaction principle**
- **adjustable, wear-free eddy current brake as turbine load**
- **GUNT software for data acquisition, visualisation and operation**
- **part of the GUNT-Labline fluid energy machines**

The conversion of pressure energy into kinetic energy in the rotor is characteristic for reaction turbines.

The experimental unit is placed upon the base unit HM 290. The two units together provide the basic experiments to get to know the operating behaviour and the most important characteristic variables of reaction turbines.

The water jet discharged from the rotor which drives the turbine according to the reaction principle can be observed during operation. This facilitates the understanding of the principle of operation and the underlying laws (eg. momentum).

HM 288 consists of a rotor mounted in a transparent housing and a loading device outside of the housing. The eddy current brake generates a defined load. The eddy current brake is specially developed by GUNT. It is wear-free and can be finely adusted.

The torque delivered by the turbine is determined via an electronic force sensor. The speed is measured with an optical speed sensor. The measuring values are transferred to the base unit HM 290.

The water supply and the flow rate measurement are realised with the base unit HM 290. A pressure control included in HM 290 enables the recording of characteristics at a constant head.

All the advantages of software-supported experiments and evaluation are offered by the GUNT software in HM 290.

### Learning objectives/experiments

- principle of operation of a reaction turbine
- characteristic curves at constant head
  - relationship between torque and speed
  - efficiency dependent on speed
  - flow rate dependent on speed
  - hydraulic power and mechanical power depending on speed
- evaluation of measuring values and characteristics based on the theory



HM 288
Experiments with a reaction turbine

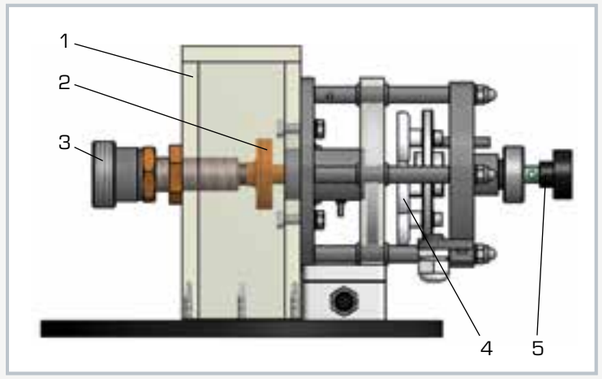


1 transparent housing, 2 rotor, 3 water supply, 4 eddy current brake, 5 adjustment of the eddy current brake

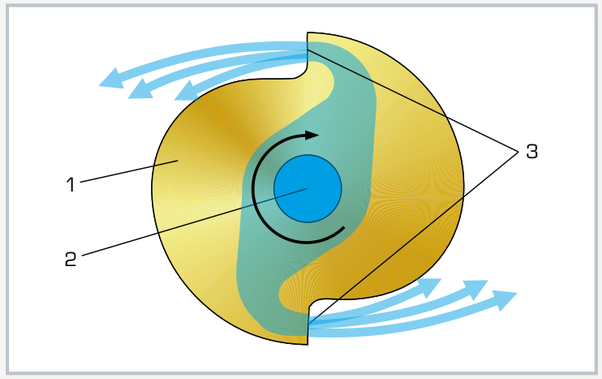


Principle of operation of a reaction turbine
1 rotor, 2 water inlet via hub, 3 water outlet via tangential nozzles

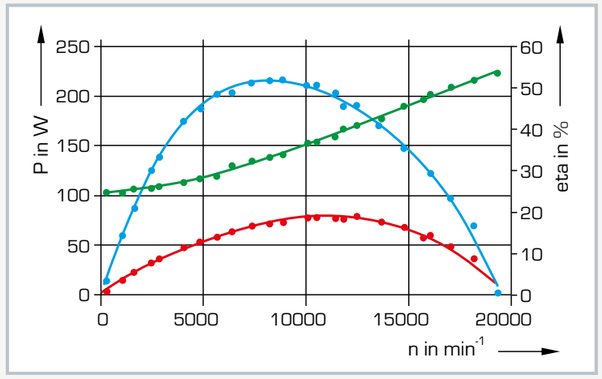


Characteristic curves of the reaction turbine dependent on the speed
red: mechanical power $P_{mech}$, blue: efficiency, green: hydraulical power $P_{hydr}$; P power, eta efficiency, n speed

### Specification

[1] turbine to place upon the base unit HM 290
[2] functioning and operating behaviour of a reaction turbine
[3] transparent housing for observing the discharged water jet
[4] constant pressure of the turbine represents in practice the head and is adjusted via HM 290
[5] turbine load using the wear-free and adjustable eddy current brake
[6] force sensor to determine the torque on turbine shaft
[7] optical speed sensor for measuring the turbine speed
[8] water supply, flow rate measurement and unit-specific software data acquisition and operation via HM 290

### Technical data

Turbine
- power output: approx. 60W at 8000min$^{-1}$
- rotor diameter: 50mm

Measuring ranges
- torque: 0...0,5Nm
- speed: 0...20000min$^{-1}$

LxWxH: 360x250x180mm
Weight: approx. 5kg

### Scope of delivery

1 experimental unit
1 set of instructional material

# HM 289
## Experiments with a Pelton turbine

The illustration shows HM 289 on top of the water tank in HM 290.

### Description

- **illustrative model of a Pelton turbine**
- **adjustable, wear-free eddy current brake as turbine load**
- **GUNT software for data acquisition, visualisation and operation**
- **part of the GUNT-Labline fluid energy machines**

Pelton turbines are types of impulse turbine. They are driven by free jet nozzles. In the nozzles, the water is strongly accelerated. Ambient pressure exists at the nozzle outlet.

The experimental unit is placed upon the base unit HM 290. The two units together provide the basic experiments to get to know the operating behaviour and the most important characteristic variables of Pelton turbines.

The water jet is accelerated in a nozzle and hits the Pelton wheel tangentially. In the blades on the circumference of the Pelton wheel the water jet is deflected by approximately 180°. The impulse of the water jet is transmitted to the Pelton wheel.

HM 289 consists of a Pelton wheel and a needle nozzle, mounted in a transparent housing. The needle nozzle can be adjusted during operation. The loading device is outside of the housing. The eddy current brake generates a defined load. The eddy current brake is specially developed by GUNT. It is wear-free and can be finely adusted.

The torque delivered by the turbine is determined via an electronic force sensor. The speed is measured with an optical speed sensor. The measuring values are transferred to the base unit HM 290.

The water supply and the flow rate measurement are realised with the base unit HM 290. A pressure control included in HM 290 enables the recording of characteristics at a constant head.

All the advantages of software-supported experiments and evaluation are offered by the GUNT software in HM 290.

### Learning objectives/experiments

- principle of operation of a Pelton turbine
- characteristic at constant head
  - relationship between torque and speed
  - efficiency dependent on speed
  - flow rate dependent on speed
  - hydraulic power and mechanical power dependent on speed
- evaluation of measuring values and characteristics based on the theory
- partial load behaviour with needle control in comparison to throttle control



HM 289
Experiments with a Pelton turbine

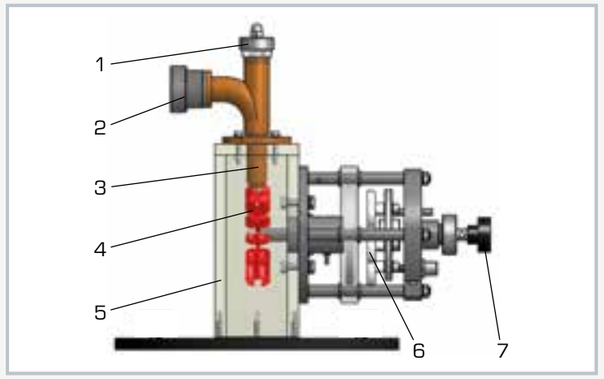


1 adjustment of the needle nozzle, 2 water supply, 3 needle nozzle, 4 Pelton wheel, 5 transparent housing, 6 eddy current brake, 7 adjustment of the eddy current brake

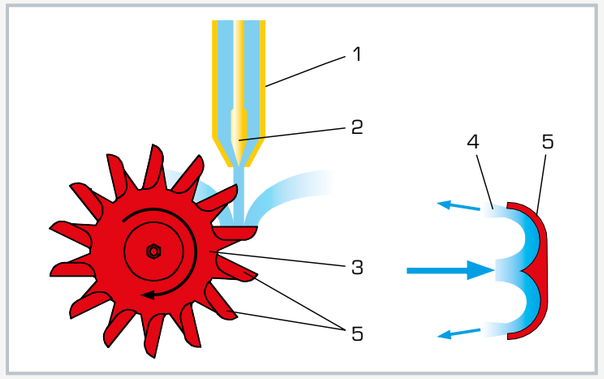


Principle of operation of a Pelton turbine
1 needle nozzle, 2 adjustable nozzle needle, 3 Pelton wheel, 4 deflected water jet, 5 impinged blade

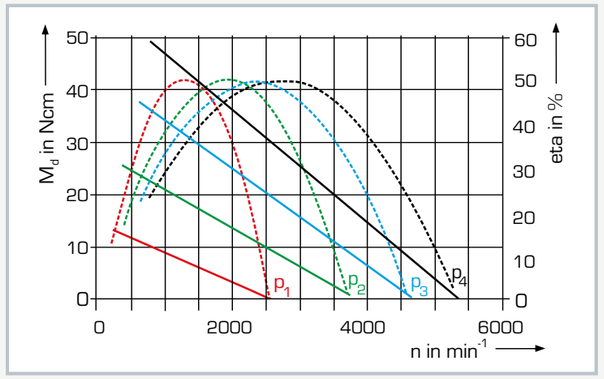


Characteristic curves of the Pelton turbine at different pressures ($p_1$...$p_4$); torque (continuous lines) and efficiency (dashed lines) dependent on speed; $M_d$ torque, n speed, eta efficiency

### Specification

[1] turbine to place upon the base unit HM 290
[2] functioning and operating behaviour of a Pelton turbine
[3] transparent housing for observing the Pelton wheel and needle nozzle
[4] different nozzle cross-sections via adjustable nozzle needle
[5] constant pressure of the turbine represents in practice the head and is adjusted via HM 290
[6] turbine load using the wear-free and adjustable eddy current brake
[7] force sensor to determine the torque on turbine shaft
[8] optical speed sensor for measuring the turbine speed
[9] water supply, flow rate measurement and unit-specific software data acquisition and operation via HM 290

### Technical data

Pelton turbine
- power output: approx. 70W at 2700$min^{-1}$
- wheel diameter: 70mm

Measuring ranges
- torque: 0...0,5Nm
- speed: 0...9000$min^{-1}$

LxWxH: 350x250x300mm
Weight: approx. 5kg

### Scope of delivery

1 experimental unit
1 set of instructional material

# HM 291
## Experiments with an action turbine

The illustration shows HM 291 on top of the water tank in HM 290.

### Description

- **illustrative model of an axial constant-pressure turbine**
- **adjustable, wear-free eddy current brake as turbine load**
- **GUNT software for data acquisition, visualisation and operation**
- **part of the GUNT-Labline fluid energy machines**

Action turbines operate according to the principle of equal pressure. The static pressures at the inlet and at the outlet of the rotor are equal.

The experimental unit is placed upon the base unit HM 290. The two units together provide the basic experiments to get to know the operating behaviour and the most important characteristic variables of action turbines.

The water jets are discharged at high velocity from the four nozzles of the distributor. The water jets are deflected in the rotor and put it in motion. The axially discharged water from the rotor can be observed.

HM 291 consists of a rotor, mounted in a transparent housing, a distributor with four nozzles and a loading device outside of the housing. The number of active nozzles can be adjusted by valves. The eddy current brake generates a defined load. The eddy current brake is specially developed by GUNT. It is wear-free and can be finely adusted.

The torque delivered by the turbine is determined via an electronic force sensor. The speed is measured with an optical speed sensor. The measuring values are transferred to the base unit HM 290.

The water supply and the flow rate measurement are realised with the base unit HM 290. A pressure control included in HM 290 enables the recording of characteristics at a constant head.

All the advantages of software-supported experiments and evaluation are offered by the GUNT software in HM 290.

### Learning objectives/experiments

- principle of operation of an action turbine
- characteristic curves at constant head
  - relationship between torque and speed
  - efficiency dependent on speed
  - flow rate dependent on speed
  - hydraulic power and mechanical power dependent on speed
- evaluation of measuring values and characteristics based on the theory
- partial load behaviour with controlling the number of nozzles in comparison to throttle control



# HM 291
## Experiments with an action turbine

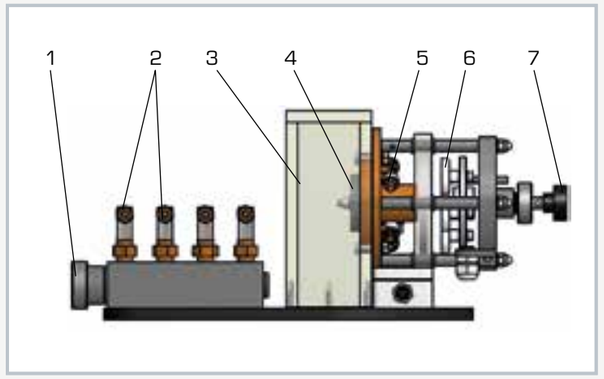


1 water supply, 2 nozzle valves, 3 transparent housing, 4 rotor, 5 distributor with 4 nozzles, 6 eddy current brake, 7 adjustment of the eddy current brake

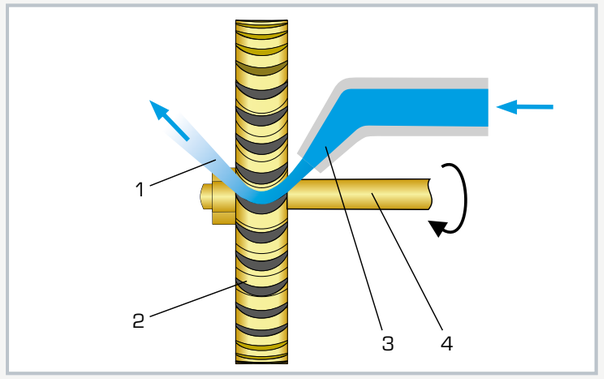


Principle of operation of an action turbine
1 water outlet, 2 rotor, 3 water inlet from four nozzles, 4 turbine shaft

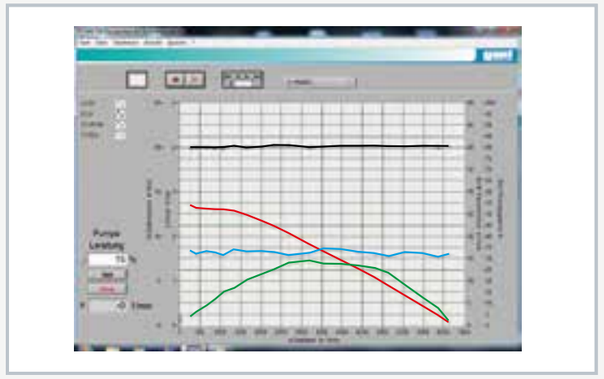

Software screenshot: characteristic curbes of the action turbine dependent on speed

### Specification

[1] turbine to place upon the base unit HM 290
[2] functioning and operating behaviour of an action turbine
[3] transparent housing for observing the rotor
[4] distributor with 4 nozzles, active nozzles adjustable by valves
[5] constant pressure of the turbine represents in practice the head and is adjusted via HM 290
[6] turbine load using the wear-free and adjustable eddy current brake
[7] force sensor to determine the torque on turbine shaft
[8] optical speed sensor for measuring the turbine speed
[9] water supply, flow rate measurement and unit-specific software data acquisition and operation via HM 290

### Technical data

Turbine
- power output: approx. 28W at 3600min$^{-1}$
- rotor diameter: 50mm

Measuring ranges
- torque: 0...0,5Nm
- speed: 0...9000min$^{-1}$

LxWxH: 420x320x180mm
Weight: approx. 7kg

### Scope of delivery

1 experimental unit
1 set of instructional material

# HM 290
## Base unit for turbines

### Description

- **closed water circuit for supplying turbines**
- **GUNT software for data acquisition, visualisation and operation**
- **basic experiments on centrifugal pumps**
- **part of the GUNT-Labline fluid energy machines**

The base unit HM 290 is required to supply different turbines. Additionally, the base unit enables basic experiments on a centrifugal pump.

The closed water circuit of HM 290 features a water tank and a centrifugal pump with variable speed via a frequency converter. The turbine to be investigated (HM 288, HM 289, HM 291) is placed on the tank cover and is connected to the base unit via a hose. The flow rate hence the pressure applied to the turbine is adjusted by pump speed. The head and the pressure upstream of the turbine can be kept constant by a pressure control. A damping plate inside the tank ensures a low air entry into the circulating water. Basic pump experiments can be performed using the throttle valve included. The throttle valve is placed upon the tank cover instead of the turbine.

The base unit is fitted with sensors for pressure and flow rate. The microprocessor-based measuring technique is well protected in the housing. The measured values are transmitted directly to a PC via USB where they can be analysed using the software included.

All the advantages of software-supported experiments with operation and evaluation are offered by the GUNT software and the microprocessor.

Following turbines are available: a reaction turbine (HM 288), a Pelton turbine (HM 289) and an action turbine (HM 291).

### Learning objectives/experiments

- basic experiments on a centrifugal pump
- together with the turbines HM 288, HM 289 or HM 291
  - determination of typical turbine curves
  - performance curves at varying turbine speeds
  - determination of efficiencies



# HM 290
## Base unit for turbines

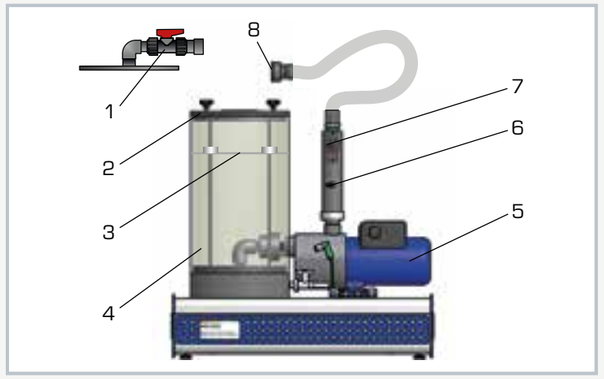


1 throttle valve for pump experiments, 2 tank cover, 3 damping plate, 4 water tank, 5 pump with motor, 6 pressure sensor, 7 flow meter, 8 water connection

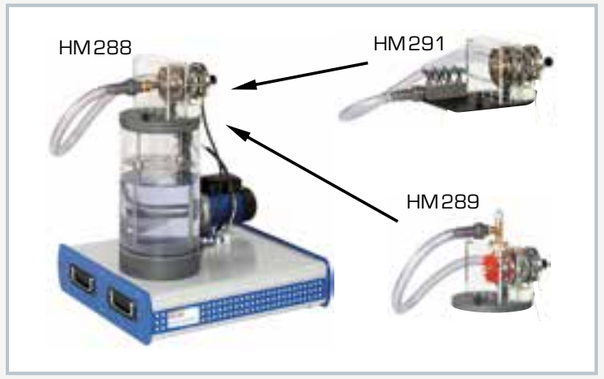


The illustration shows the base unit HM 290 together with the reaction turbine HM 288. The turbines HM 289 or HM 291 can be investigated after easily interchanging them.

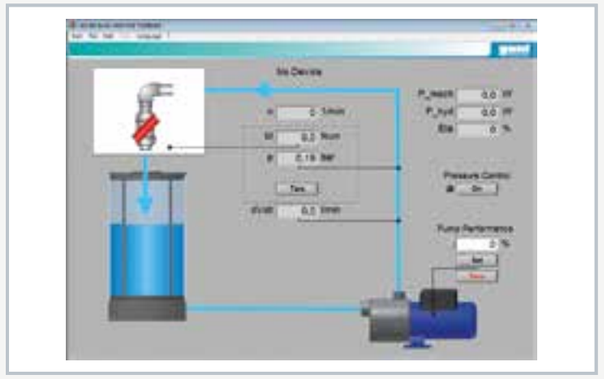

Operating interface of the powerful software: experiment with the pump

### Specification

[1] supplying the turbines HM 288, HM 289 or HM 291 with water under pressure
[2] basic experiments on centrifugal pumps
[3] together with the turbines: investigation of operating behaviour and recording of turbine characteristics
[4] includes pump and transparent water tank
[5] low air entry into circulating water ensured by damping plate inside the tank
[6] variable pump speed via frequency converter
[7] sensors for flow rate and pressure
[8] microprocessor-based measuring technique
[9] display and evaluation of the measured values as well as operation of the unit via software
[10] GUNT software with control functions and data acquisition via USB under Windows 7, 8.1, 10

### Technical data

Pump
- power consumption: 670W
- max. flow rate: 70L/min
- max. head: 35,4m

Water tank: approx. 15L

Measuring ranges
- flow rate: 3,9...50L/min
- pressure: -1...5bar

230V, 50Hz, 1 phase
230V, 60Hz, 1 phase; 120V, 60Hz, 1 phase
UL/CSA optional
LxWxH: 670x600x630mm
Weight: approx. 37kg

### Required for operation

PC with Windows

### Scope of delivery

1 experimental unit
1 GUNT software CD + USB cable
1 set of instructional material

# HM 450C
# Characteristic variables of hydraulic turbomachines

Hydraulic turbomachines are a type of fluid energy machine. They work continuously and feature a steady pressure difference between inlet and outlet. HM 450C is a modular trainer for basic experiments in the field of hydraulic turbomachines. HM 450C forms the base unit. A centrifugal pump is included, which is used to conduct experiments on the topic of driven machines. A closed water circuit means the trainer can be used anywhere.

The trainer is equipped with all major sensors for data acquisitions in order to ensure meaningful results. Key measuring values are displayed during the experiments on displays on the trainer and on a PC.

Measurement analyses such as dimensionless parameters and pump characteristics can be displayed and saved on a PC using the GUNT software.

A special feature of HM 450C is the ability to operate pump and turbine at the same time. Relevant measured values are recorded contemporaneously at both turbomachines. Thus the trainer can be used as a **pumped storage plant**.

HM 450C as a pure pump trainer

The Pelton turbine HM 450.01 and Francis turbine HM 450.02 offer an expansion to the range of experiments on the topic of driving machines. The two turbines are easy to install on the trainer. They are connected with handles on the delivery side of the centrifugal pump. The sensors are connected via plugs on the trainer's switch cabinet.

HM 450.01
Pelton turbine

HM 450.02
Francis turbine

HM 450C
trainer with
water turbines

Adjusting the guide vanes of a Francis turbine

Flow measurement with electromagnetic sensor

Centrifugal pump with measurement of the drive torque

Band brake on the turbine

Needle nozzle and impeller of the Pelton turbine

Adjusting knob for the needle nozzle

Position of the guide vanes in the Francis turbine

Vanes and impeller of the Francis turbine

# HM 450C
## Characteristic variables of hydraulic turbomachines

The illustration shows HM 450C together with the two turbines HM 450.01 (left) and HM 450.02 (right).

### Description

- **characteristic variables of water turbines and centrifugal pumps**
- **pelton turbine HM 450.01 and Francis turbine HM 450.02 extend the scope of experiments**
- **pumped storage plant**

Turbomachines such as pumps and turbines are energy converters. Turbines convert flow energy into mechanical energy and pumps convert mechanical energy into flow energy.

HM 450C can be used to investigate a centrifugal pump. Experiments can be performed on two key water turbine designs: Pelton and Francis turbine, available as accessories HM 450.01 and HM 450.02.

The closed water circuit comprises a tank, a standard centrifugal pump with variable speed and a flow control valve to adjust the back pressure.

The speed is detected contact-free by means of an inductive displacement sensor on the motor shaft. To determine the drive power, the drive motor is mounted on swivel bearings and equipped with a force sensor to measure the drive torque. Pressures at the inlet and outlet of the pump are measured. The flow rate is measured by means of an electromagnetic flow meter. The measured values are displayed digitally and processed further on a PC. The PC is used to calculate the power output data of the examined turbomachine and to represent them in characteristics.

One of the turbines HM 450.01 or HM 450.02 can also be placed on top of the storage tank. The centrifugal pump supplies the turbine with water. The measured values of the turbine are transfered via cable to HM 450C. A special feature of HM 450C is the ability to operate pump and turbine at the same time. Relevant measured values are recorded contemporaneously at both turbomachines. Thus the trainer can be used as a pumped storage plant.

### Learning objectives/experiments

- centrifugal pump
  - measuring inlet and outlet pressures of the pump
  - determining delivery height
  - determining hydraulic output
  - determining mechanical output
  - recording characteristics at various speeds
  - determining the efficiency
- with accessories Pelton turbine HM 450.01 or Francis turbine HM 450.02
  - measuring torque and speed
  - determining efficiency of the turbine
  - recording characteristics
  - demonstration of a pumped storage plant



HM 450C
Characteristic variables of hydraulic turbomachines

1 electromagnetic flow meter, 2 flow control valve, 3 storage tank, 4 ressure sensor at pump inlet, 5 centrifugal pump, 6 drive motor including measurement of torque, 7 pressure sensor at pump outlet, 8 switch cabinet with displays and controls

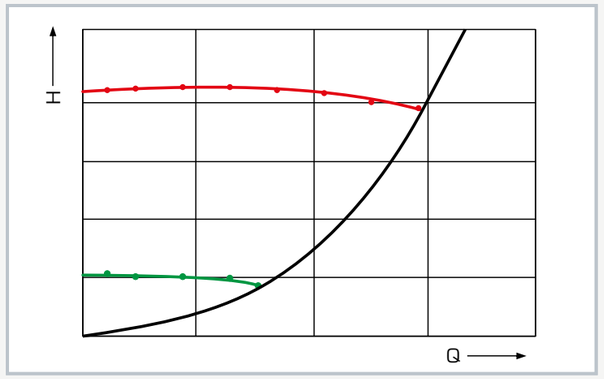


Pump characteristics: H head, Q flow rate; red: characteristics at n=2900min$^{-1}$, green: characteristics at n=1450min$^{-1}$, black: system characteristic

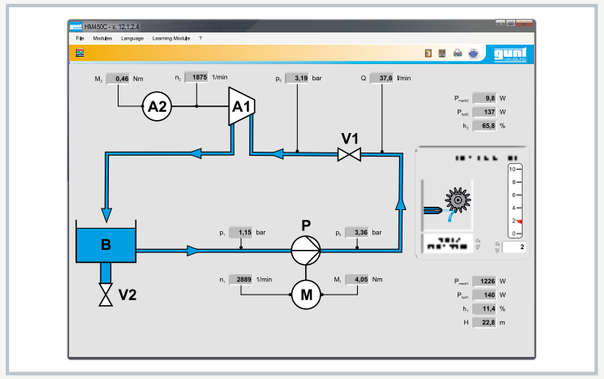


Software screenshot: Francis turbine process schematic

### Specification

[1] determining characteristic variables of a centrifugal pump
[2] determining characteristic variables of water turbines together with the accessories HM 450.01 and HM 450.02
[3] experiments on a pump in a closed water circuit with storage tank and flow control valve to adjust the back pressure
[4] experiments on turbines: closed water circuit for supplying turbines
[5] pipes and fittings made of PVC
[6] 3-phase AC motor for pump with variable speed via frequency converter
[7] non-contact speed measurement at the turbine shaft and force sensor at the brake for measuring the torque
[8] digital displays for pressures, flow rate, speed and torque
[9] GUNT software for data acquisition via USB under Windows 7, 8.1, 10

### Technical data

Standard centrifugal pump
- max. head: 23,9m
- max. flow rate: 31m$^3$/h

Drive motor with variable speed
- power output: 2,2kW
- speed range: 0...3000min$^{-1}$

Storage tank: 250L

Measuring ranges
- pressure: 2x 0...4bar abs.
- flow rate: 0...40m$^3$/h
- torque: 0...20Nm
- speed: 2x 0...4000min$^{-1}$

230V, 50Hz, 1 phase
230V, 60Hz, 1 phase
230V, 60Hz, 3 phases
UL/CSA optional
LxWxH: 1900x790x1900mm
Weight: approx. 243kg

### Required for operation

PC with Windows recommended

### Scope of delivery

1 trainer
1 GUNT software CD + USB cable
1 set of instructional material

# HM 450.01
## Pelton turbine

## Description

- **Pelton turbine with visible operating area**
- **closed water circuit and data processing software for use with the HM 450C trainer**

The Pelton turbine is a type of free-jet resp. impulse turbine which convert the pressure energy of water into kinetic energy entirely in the distributor. Pelton turbines are used at large heads and relatively low flow rates. The turbine power is adjusted by means of the nozzle cross-section. In practice, Pelton turbines are used for driving synchronous generators, where they run at constant speed.

The Pelton turbine HM 450.01 is an accessory for the HM 450C trainer. The experimental unit consists of the Pelton wheel, a needle nozzle used as distributor, a band brake for loading the turbine and a housing with a transparent front panel. The transparent cover enables you to observe the water flow, the Pelton wheel and the nozzle during operation. You can change the nozzle cross-section and thus the flow rate by adjusting the nozzle needle.

The pressure at the turbine inlet is recorded with a pressure sensor. A force sensor and a speed sensor are attached to the band brake. Thus, the mechanical power output of the turbine can be determined. Speed, torque and pressure are displayed on the switch cabinet of HM 450C and processed further in the software. Water supply and flow rate measurement are provided by HM 450C.

## Learning objectives/experiments

- determination of mechanical output
- determination of efficiency
- recording of characteristic curves
- investigation of the influence of the nozzle cross-section on the power output



# HM 450.01
## Pelton turbine

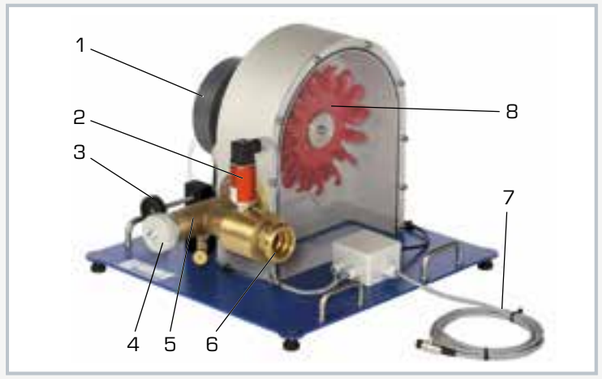


1 band brake, 2 pressure sensor, 3 handwheel for adjusting the brake, 4 handwheel for adjusting the nozzle cross-section, 5 needle nozzle, 6 water inlet, 7 connecting cable to HM 450C, 8 Pelton wheel

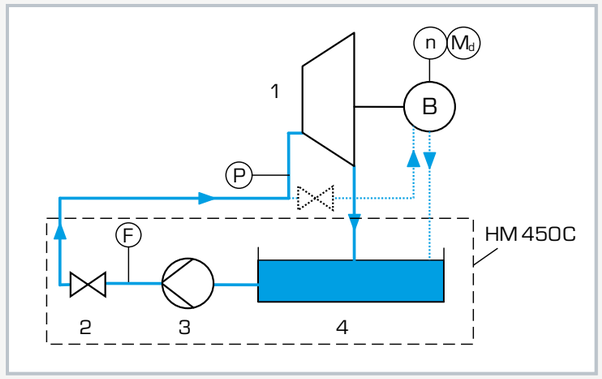


1 Pelton turbine, 2 flow control valve, 3 pump, 4 tank; blue dashed lines: cooling water; B brake; F flow rate, P pressure, n speed, $M_d$ torque

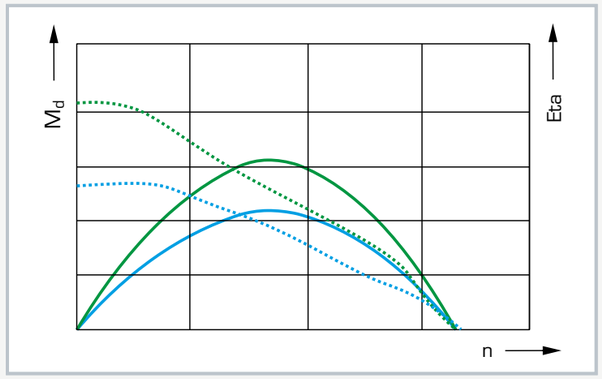


Efficiency and torque (dashed lines) depending on the speed at different powers and fully opened nozzle: green: 100% power, blue: 65% power, Eta: efficiency, n speed, $M_d$ torque

## Specification

[1] recording the curves of a Pelton turbine and investigating the influence of the nozzle cross-section
[2] transparent front panel for observing the operating area
[3] loading the turbine by use of a band brake
[4] adjustable nozzle needle for setting different nozzle cross-sections
[5] non-contact speed measurement at the turbine shaft and force sensor at the brake for measuring the torque
[6] force sensor at the turbine inlet
[7] speed, torque and pressure displayed on the switch cabinet of HM 450C
[8] water supply, flow rate measurement and data processing software via HM 450C

## Technical data

Turbine
- output: approx. 350W at 1000min$^{-1}$, 150L/min, H=20m
- max. speed: 1500min$^{-1}$
- Pelton wheel
  - 14 blades
  - medium diameter: 165mm

Measuring ranges
- torque: 0...9,81Nm
- pressure: 0...4bar abs.
- speed: 0...4000min$^{-1}$

LxWxH: 600x490x410mm
Weight: approx. 27kg

## Scope of delivery

1 experimental unit
1 set of instructional material

# HM 450.02
## Francis turbine

## Description

- **Francis turbine with visible operating area**
- **closed water circuit and data processing software for use with the HM 450C trainer**

The Francis turbine is part of the reaction turbines which convert the pressure energy of water into kinetic energy in the distributor and in the rotor. Francis turbines are used at medium heads and large flow rates. The turbine power is controlled by adjusting the guide vanes. In practice, Francis turbines are used in run-of-the river power plants and in storage power plants.

The Francis turbine HM 450.02 is an accessory for the HM 450C trainer. The experimental unit consists of the rotor, the distributor with adjustable guide vanes, a band brake for loading the turbine and the spiral housing with a transparent front panel. The transparent cover enables you to observe the water flow, the rotor and the guide vanes during operation. The angle of attack and the cross-section of flow are adapted to the speed and power of the turbine by adjusting the guide vanes.

The pressure at the turbine inlet is recorded with a pressure sensor. A force sensor and a speed sensor are attached to the band brake. Thus, the mechanical power output of the turbine can be determined. Speed, torque and pressure are displayed on the switch cabinet of HM 450C and processed further in the software. Water supply and flow rate measurement are provided by HM 450C.

## Learning objectives/experiments

- determination of mechanical output
- determination of efficiency
- recording of characteristic curves
- investigation of the influence of the guide vane position on the power output
- velocity triangles



# HM 450.02
## Francis turbine

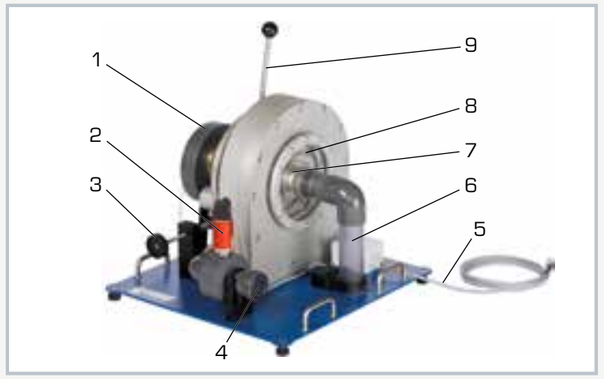


1 band brake, 2 pressure sensor, 3 handwheel for adjusting the brake, 4 water inlet, 5 connecting cable to HM 450C, 6 water outlet, 7 rotor, 8 guide vanes, 9 lever for adjusting the guide vanes

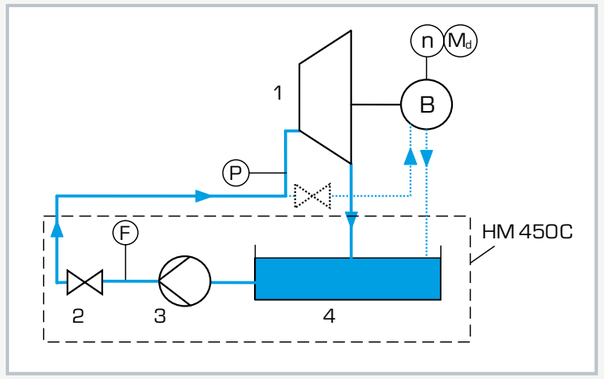


1 Francis turbine, 2 flow control valve, 3 pump, 4 tank; blue dashed lines: cooling water; B brake; F flow rate, P pressure, n speed, $M_d$ torque

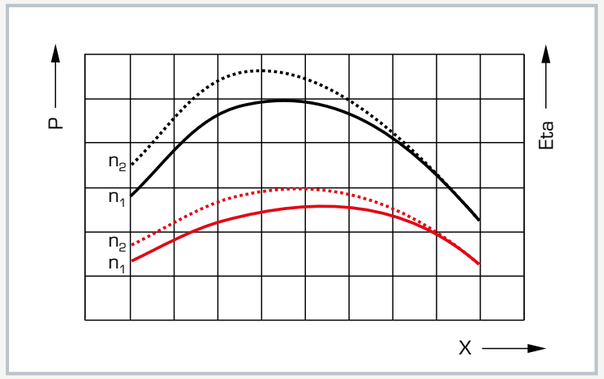


Efficiency and mechanical power depending on the guide vane position at different speeds: black: power output, red: efficiency; n speed, Eta efficiency, P mechanical power, X guide vane position

## Specification

[1] recording the curves of a Francis turbine and investigating the influence of the guide vane position
[2] transparent front panel for observing the operating area
[3] loading the turbine by use of the band brake
[4] adjustable guide vanes for setting different angles of attack
[5] recording the torque via band brake and force sensor
[6] force sensor at the turbine inlet
[7] speed, torque and pressure displayed on the switch cabinet of HM 450C
[8] water supply, flow rate measurement and data processing software via HM 450C

## Technical data

Turbine
- output: approx. 350W at 1500min$^{-1}$, 270L/min, H=15m
- max. speed: 3000min$^{-1}$
- rotor
  - 11 blades
  - medium diameter: 60mm
- distributor
  - 7 vanes
  - angle of attack: 0...20°

Measuring ranges
- torque: 0...9,81Nm
- pressure: 0...4bar abs.
- speed: 0...4000min$^{-1}$

LxWxH: 510x490x410mm
Weight: approx. 38kg

## Scope of delivery

1 experimental unit
1 set of instructional material

# HM 405
# Axial-flow turbomachines

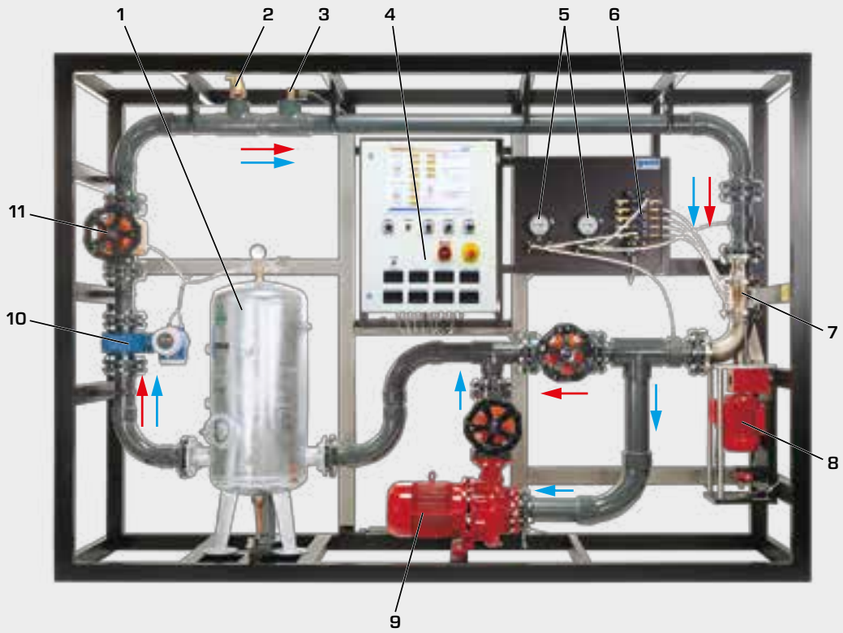


1 water tank with air cushion,
2 bleed valve,
3 solenoid valve for venting,
4 switch cabinet with displays and controls,
5 manometer for inlet and outlet pressure,
6 differential pressure sensor,
7 axial turbomachine,
8 motor/generator with torque measurement,
9 centrifugal pump for turbine operation,
10 electromagnetic flow meter,
11 valve for flow adjustment;

**red arrows** pump operation,
**blue arrows** turbine operation

The experimental plant HM 405 illustrates the function of an axial turbine with interchangeable rotors and stators. By replacing these, the turbomachine can be operated as a turbine or pump. Different rotors and stators respectively impellers and guide vane systems are provided so that their influence on the power characteristics can be investigated.

The housing is made of transparent material in order to provide insight into the flow processes upstream, between and downstream of rotor and stator respectively impeller and guide vane system.

In turbine mode the electric motor operates as a generator to generate electricity. In pump mode it operates as a drive for the pump. The electricity produced from the generator is fed into the centrifugal pump for turbine operation.

Practical experiments and calculations on the following topics can be performed depending on the operating mode:

- record characteristics
- determine dimensionless characteristic variables
- velocity triangles and pressure curves
- investigation of energy conversion within the turbomachine
- how blade / vane shape affects power and efficiency
- determine the outlet angular momentum and its effect on the power
- cavitation effects

The system can be depressurised in order to attach the guide vanes and blades. In this way the pump is emptied with no loss of water. The water runs back into the tank. Admitting compressed air to the tank refills the system. The compressed air is also used to adjust the upstream pressure. An automatic bleed valve removes the remaining air from the pipe system.

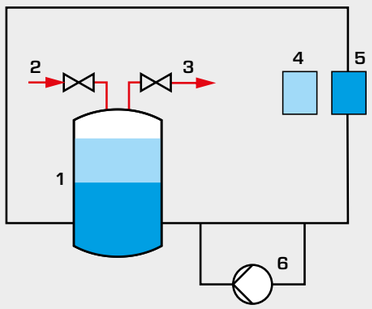


**1** water tank with air cushion, **2** compressed air, **3** bleeding,
**4** empty turbomachine, **5** filled turbomachine, **6** centrifugal pump;
refill system,
drain system

The 3-hole probe (1) can be used to measure the direction and velocity in the flow field directly upstream of, between and downstream of rotor and stator respectively impeller and guide vane system. These values are used to record the velocity triangles for the blade / vane shapes.

Varying load, speed and flow rate offers a wide range of experiments.

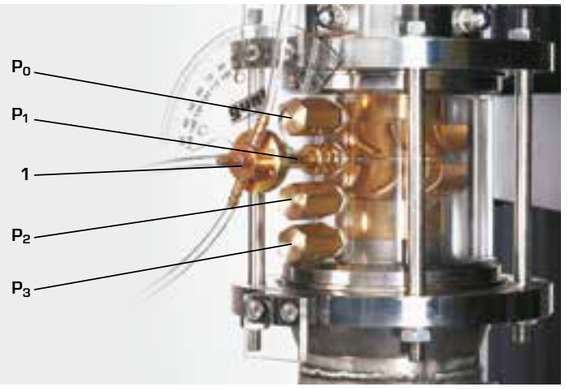


## Velocity triangles on turbines or pumps

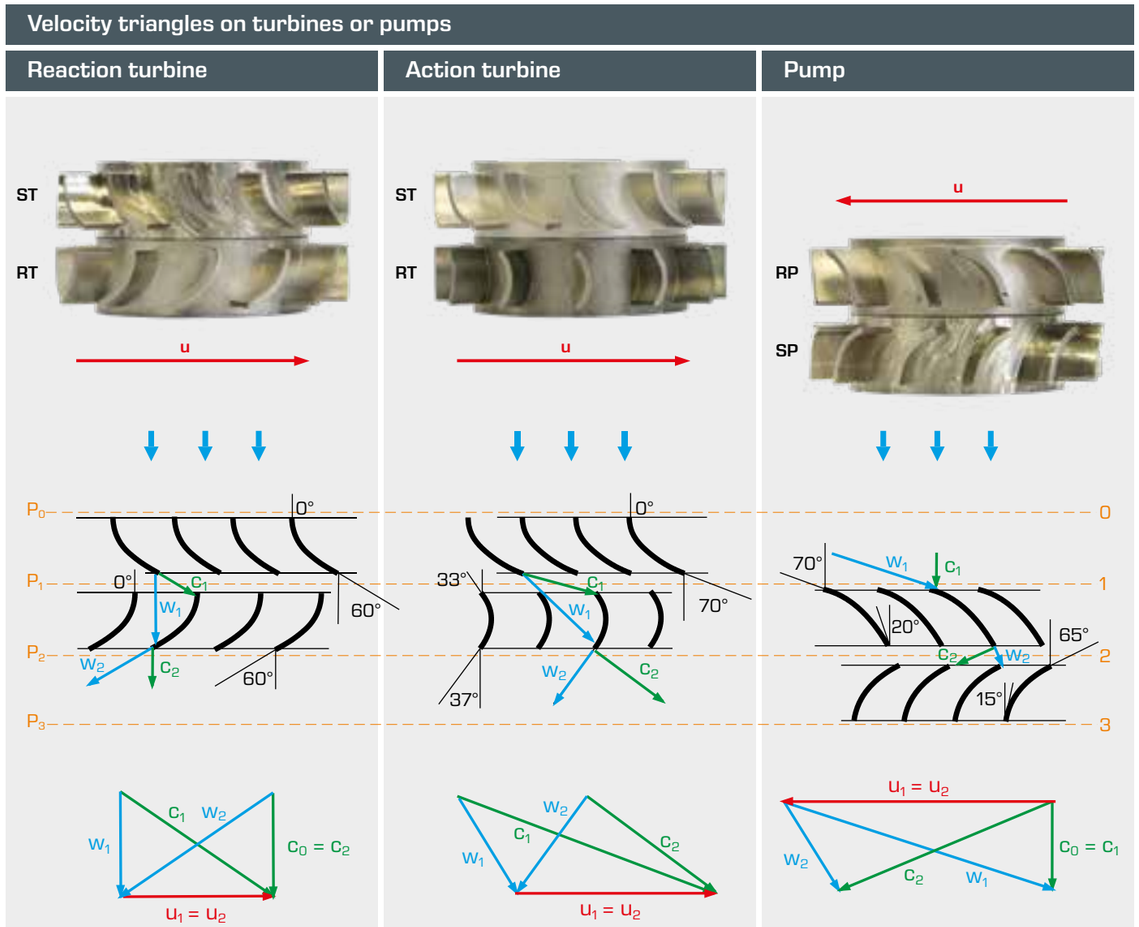


**ST** turbine stator, **SP** pump guide vane system, **RT** turbine rotor, **RP** pump impeller, **w** relative water velocity,
**c** absolute water velocity, **u** circumferential velocity, $P_0 ... P_3$ pressure measuring points

# HM 405
## Axial-flow turbomachines

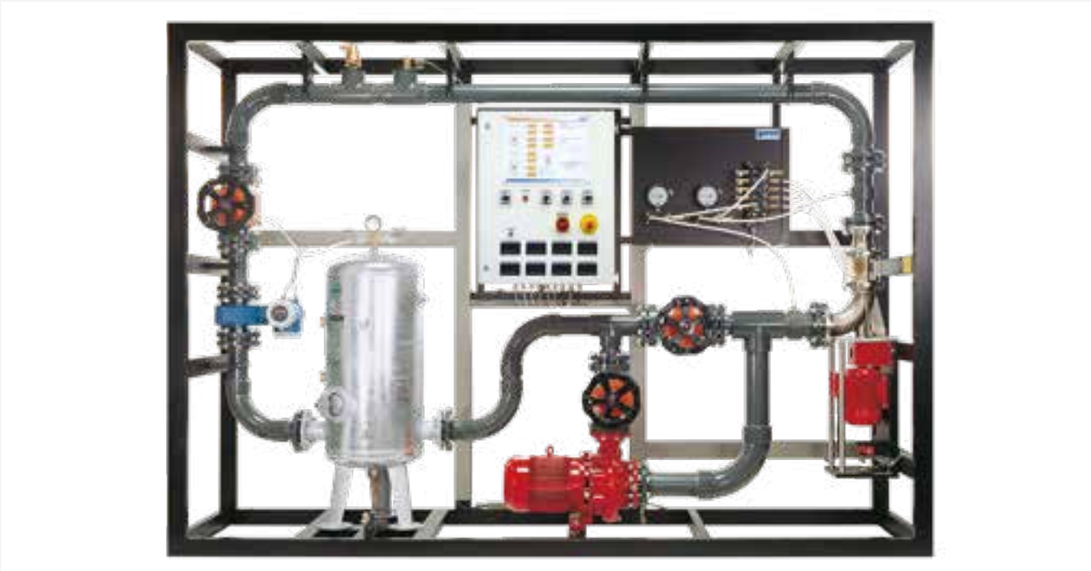

### Description

- **investigation of a single-stage axial turbomachine**
- **can be operated as pump or turbine by changing rotor, impeller and stator, guide vane system**
- **probe to determine flow conditions at inlet and outlet of rotor, impeller and stator, guide vane system**
- **transparent working area**

The core piece of the experimental plant is the axial turbomachine with attached asynchronous motor. It can be operated either as a pump or turbine. To this end, different rotors, impellers and stators, guide vane systems are used. Included in the scope of delivery are four rotors, impellers and four stators, guide vane systems supplied with different blade, vane angles. The experimental plant contains a closed water circuit with expansion tank and centrifugal pump. The compressed-air powered expansion tank allows the turbomachine to be converted without loss of water.

The asynchronous motor functions during turbine operation as a generator, and during pump operation as a drive. A powerful pump generates flow and pressure during turbine operation. The power that is generated by the turbine is fed into this pump.

The transparent housing allows a full view of the rotor, impeller and stator, guide vane system and flow processes. The 3-hole probe can be used to measure the direction and velocity in the flow field directly upstream of, between, and downstream of rotor, impeller and stator, guide vane system. These values are used to record the velocity triangles for the blade, vane shapes.

Operation under different pressure levels is possible in order to study cavitation.

The speed is detected contact-free by means of an inductive displacement sensor on the motor shaft. To determine the drive power, the asynchronous motor is mounted on swivel bearings and equipped with a force sensor to measure the drive torque. Manometers measure the pressures at inlet and outlet. Pressure sensors measure the differential pressures at rotor, impeller and stator, guide vane system. The flow rate is measured by an electromagnetic flow meter. The measured values are read from digital displays.

### Learning objectives/experiments

- recording characteristic curves
- determining dimensionless characteristics
- velocity triangles and pressure curves
- investigation of energy conversion within the turbomachine
- how blade, vane shape affects power and efficiency
- determining the outlet angular momentum and its effect on the power
- cavitation effects



HM 405
Axial-flow turbomachines

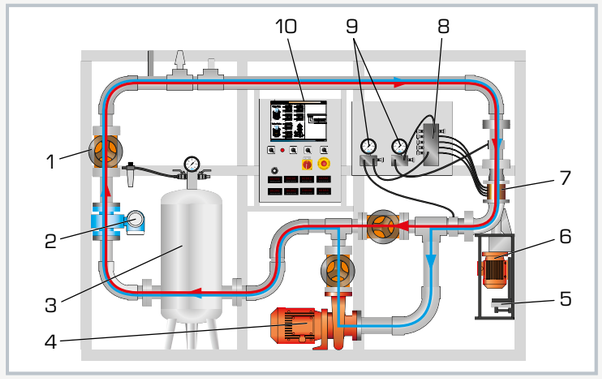


1 valve for adjusting the flow, 2 flow meter, 3 expansion tank with air cushion, 4 centrifugal pump for turbine mode, 5 force sensor for measuring the torque, 6 asynchronous motor, 7 axial-flow turbomachine, 8 differential pressure sensor, 9 manometer, 10 switch cabinet; red: pump mode, blue: turbine mode

The illustration shows cavitation effects in the working area of the axial flow turbomachine

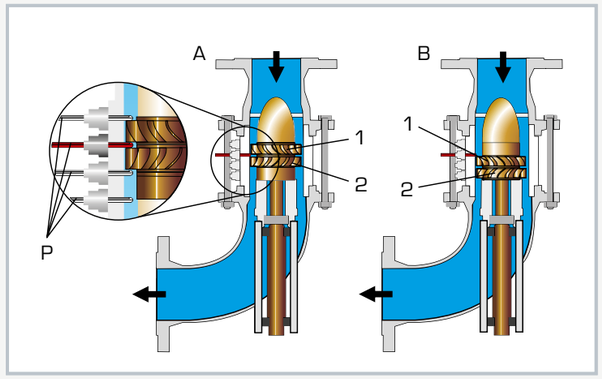


A: axial flow turbomachine as a turbine, 1 stator, 2 rotor;
B: axial flow turbomachine as a pump, 1 impeller, 2 guide vane system;
P pressure sensor

### Specification

[1] investigation of an axial flow turbomachine
[2] closed water circuit with expansion tank and centrifugal pump
[3] turbomachine may be operated as a turbine and as a pump
[4] two sets of impellers and guide vane systems for pump mode and two sets of rotors and stators for turbine mode with different inlet and outlet angles
[5] asynchronous motor with 4-quadrant operation via frequency converter
[6] recovery of the brake energy
[7] motor with pendulum bearing, torque measurement via lever arm and force sensor
[8] inductive speed sensor on the motor
[9] manometers for measuring the inlet and outlet pressures
[10] measuring probe and differential pressure sensor for recording the pressure curve in the turbomachine
[11] electromagnetic flow meter
[12] display of power consumption, torque, speed, pressure, differential pressure and flow rate

### Technical data

Centrifugal pump
- power: 5,5kW
- max. flow rate: 150m$^3$/h
- max. head: 10m

Asynchronous motor
- power: 1,5kW
- torque: 0...5Nm
- speed: 0...3000min$^{-1}$

Expansion tank: 150L

Measuring ranges
- pressure (manometer): 2x -1...5bar
- differential pressure: 5x 0...500mbar
- flow rate: 0...100m$^3$/h
- speed: 0...3000min$^{-1}$
- torque: 0...9,81Nm

400V, 50Hz, 3 phases
LxWxH: 3300x750x2300mm
Weight: approx. 620kg

### Required for operation

Compressed air connection: 3...10bar

### Scope of delivery

1 experimental plant
4 rotors
4 distributors / guide vanes
1 set of accessories
1 set of instructional material

# HM 299 Comparison of positive displacement machines and turbomachines

HM 299 Comparison of positive displacement machines and turbomachines:
The illustration shows the trainer with two centrifugal pumps connected in parallel

Driven machines

| | Turbomachines | Positive displacement machines | |
|---|---|---|---|
| | | Rotating | Oscillating |
| **Liquid** Incompressible working medium water | Centrifugal pump | Impeller pump | Piston pump |
| **Gaseous** Compressible working medium air | | Rotary vane compressor | Piston compressor |

The HM 299 trainer is used to study and compare different positive displacement and turbomachines. It comes with two centrifugal pumps, an impeller pump, a piston pump and two different compressors. All driven machines are arranged on the compact trainer and can be placed in the measuring section easily and quickly. Guide rails enable accurate and simple installation of the devices without additional alignment of the drive. Silicone hoses are connected via quick-release couplings.

Ambient air is used as a compressible working medium, so a compressed air connection is not needed. Two generously sized stabilisation tanks for the compressed air ensure interference-free measurement.

The didactic concept of this compact trainer includes several learning units so that a comprehensive and effective course on driven machines is offered. The experiments can be carried out both by the lecturer as a demonstration in front of the students and by the students themselves in the form of practical laboratory experiments or project work. The simple conversion of the machines enables a variety of experiments in a short time in order to familiarise students with the operational behaviour of positive-displacement and turbomachines.

The experiments are supported by the GUNT data acquisition software.

The comprehensive instructional materials include a detailed introduction to the subject.

## GUNT software for data acquisition

The GUNT software included in the scope of delivery displays the measurement results and assists in the evaluation of the experiments.

**Learning objectives / experiments**

- familiarisation with the function and distinctive features of positive displacement machines and turbomachines
- identifying characteristic data
- recording pump, compressor and system characteristics
- representing operating points

# HM 299
## Comparison of positive displacement machines and turbomachines

### Description

- **investigation of different driven machines: pumps and compressors**
- **experiments with liquid or gaseous media**
- **GUNT software for data acquisition**

Driven machines release absorbed mechanical work to a liquid or gaseous medium. They are divided into positive displacement machines and turbomachine according to their function. For large volumetric flow rates the benefits of turbomachines are predominant, such as centrifugal pumps; for small volumetric flow rates piston engines are more likely to be used.

The HM 299 trainer allows the comparison of different machines for liquid and gaseous media. One turbomachine and four different positive displacement machines, two with rotating pistons and two with oscillating pistons, are supplied. Software for data acquisition and visualisation makes the experiments especially clear and enables fast execution of experiments with reliable results.

HM 299 includes a drive motor with speed adjustment, belt drive and protective hood, two pressure vessels for experiments with compressors and two water tanks for experiments with pumps. Each machine is mounted on a plate and can easily be placed in the trainer. The machines are driven by a belt drive. The pumps are connected to a closed water circuit via hoses with quick-release couplings. Sensors measure the pressures at inlet and outlet, temperature, engine speed and engine output. The respective flow rate is measured indirectly via fill level (water) or Venturi nozzle (air).

The measured values are read from digital displays and can at the same time be transmitted via USB directly to a PC where they can be analysed using the software included.

### Learning objectives/experiments

- different pump and compressor types
- identifying characteristic data
- recording pump, compressor and system characteristics
- representation of operating points in series and parallel configuration of centrifugal pumps
- comparison of the different delivery properties

HM 299
Comparison of positive displacement machines and turbomachines

1 measuring tank, 2 displays and controls, 3 stabilisation and pressure vessel, 4 supply tank, 5 pump and compressor models, 6 drive motor

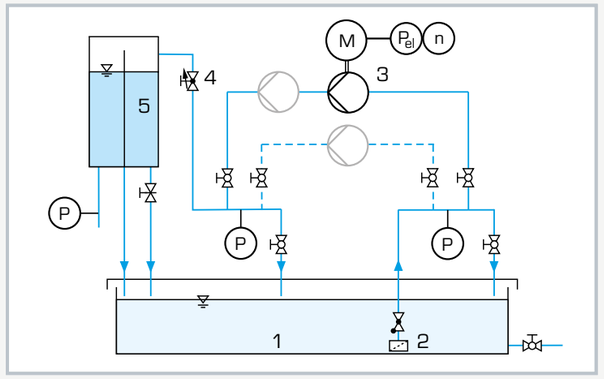


Experiments (centrifugal pumps): 1 supply tank, 2 strainer, 3 pump with drive motor, 4 valve for adjusting the flow rate, 5 measuring tank; P pressure, n speed, $P_{el}$ power

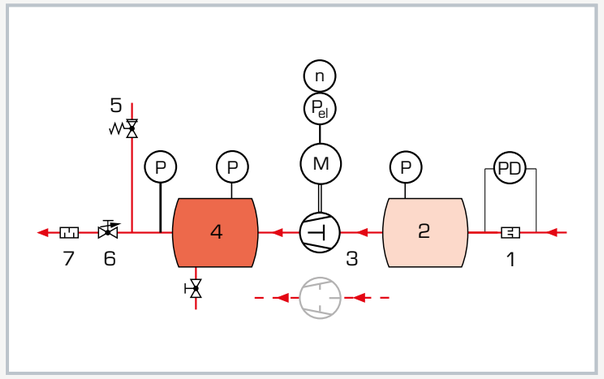


Experiments (compressors): 1 Venturi nozzle for flow measurement, 2 stabilisation tank, 3 compressor with drive motor, 4 pressure vessel, 5 safety valve, 6 valve for adjusting the flow rate, 7 sound damper; P pressure, PD differential pressure, $P_{el}$ power, n speed

### Specification

[1] comparison of driven machines for liquid and gaseous media
[2] closed water circuit
[3] 2 compressors: piston compressor and rotary vane compressor
[4] 4 pumps: piston pump, impeller pump, 2 centrifugal pumps
[5] drive motor with variable speed
[6] flow determined by level (water) or Venturi tube (air)
[7] digital displays for pressure, differential pressure, temperature, speed and drive power
[8] GUNT software for data acquisition via USB under Windows 7, 8.1, 10

### Technical data

Piston compressor
- max. volumetric flow rate: 115L/min
- max. pressure difference: 10bar

Rotary vane compressor
- max. volumetric flow rate: 90L/min
- max. pressure difference: 0...7bar
- safety valve: 0,8bar

2 centrifugal pumps
- max. flow rate: 60L/min, max. head: 18m

Piston pump
- max. flow rate: 14,6L/min
- system pressure is limited to max. 6bar

Impeller pump
- max. flow rate: 25L/min, max. pressure: 1,5bar

Drive motor, 4-pole
- max. power: 0,75kW
- nominal speed: 1370min$^{-1}$

2 pressure vessels: 10L, max. 10bar
2 water tanks: 60L, 10L

Measuring ranges
- speed: 0...2500min$^{-1}$
- power consumption: 0...1375W
- temperature: 0...200°C
- pressure: 1x 0...2bar; 1x 0...6bar; 1x 0...10bar
- differential pressure: 0...10mbar

230V, 50Hz, 1 phase
230V, 60Hz, 1 phase
LxWxH: 2100x600x1550mm
Weight: approx. 205kg

### Required for operation

PC with Windows recommended

### Scope of delivery

1 trainer
2 compressors
4 pumps
1 GUNT software CD + USB cable
1 set of instructional material

Basic knowledge

# Centrifugal pumps

### Fundamental principles of centrifugal pumps

In centrifugal pumps the energy is transferred hydrodynamically. This is in contrast to the hydrostatic transfer of energy in positive displacement pumps. In the hydrodynamic transfer of energy the fluid is accelerated by the impeller of the centrifugal pump. Therefore, the impeller of the centrifugal pump has to move with high velocity and thus a high rotational speed. The work $Y_i$ transferred to the fluid is calculated from the velocities at the impeller.

$$Y_i = (c_{2u} \cdot u_2 - c_{1u} \cdot u_1)$$

The specific work $Y_i$ is independent of the fluid properties (density, viscosity). The flow rate **Q** and the density **ϱ** of the fluid together give the power $P_i$ transferred from the impeller to the fluid.

$$P_i = \varrho \cdot Q (c_{2u} \cdot u_2 - c_{1u} \cdot u_1)$$

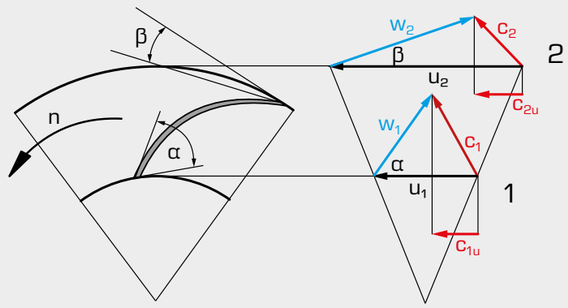


The velocities at the impeller inlet (1) and at the impeller outlet (2) can be clearly represented in velocity triangles.

**1** entry of the flow, **2** outlet of the flow,
**u** peripheral speed, **w** relative speed of the fluid in the impeller,
**c** absolute velocity of the fluid,
$c_{1u}/c_{2u}$ circumferential component of the absolute velocity,
**a, b** angle between the velocities, **Q** flow rate,
**ϱ** density, **n** rotational speed

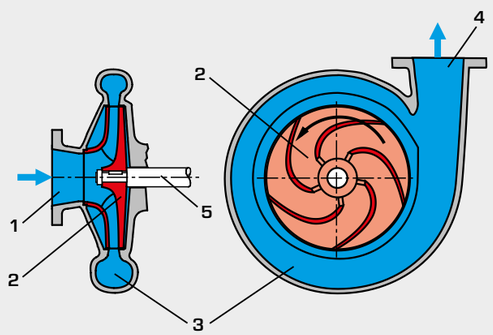


The main components of a centrifugal pump

**1** inlet, **2** impeller, **3** spiral housing, **4** outlet , **5** impeller shaft

### Advantages of centrifugal pumps

- simple design, few moving parts, long service life
- flow rate easily adjustable via valve at the outlet of the pump or via rotational speed
- high speed, direct drive via electric motor or turbine possible
- built-in pressure relief, no safety valve needed
- quiet running thanks to good mass balancing and lack of oscillating masses
- continuous, pulsation-free delivery
- solids may be carried along with the flow
- suitable for large powers
- high power concentration and smaller space

### Disadvantages of centrifugal pumps

- not self-priming (special types such as side channel pumps may also be self-priming)
- risk of cavitation with warm water or low intake pressures
- flow rate is dependent on the delivery pressure
- several stages necessary at high delivery pressures

### Design features of centrifugal pumps

- number of stages: single-stage, multi-stage
- open / closed impeller
- **1** single-suction / **2** double-suction impeller
- flow through the impeller
  **3** radial, **4** diagonal, **5** axial

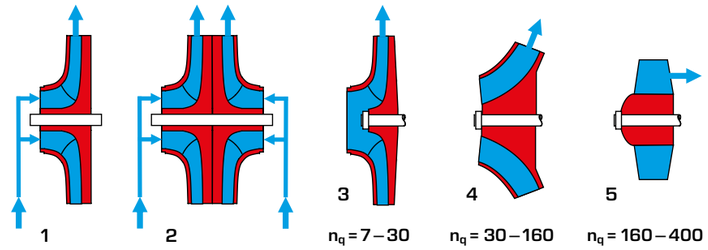


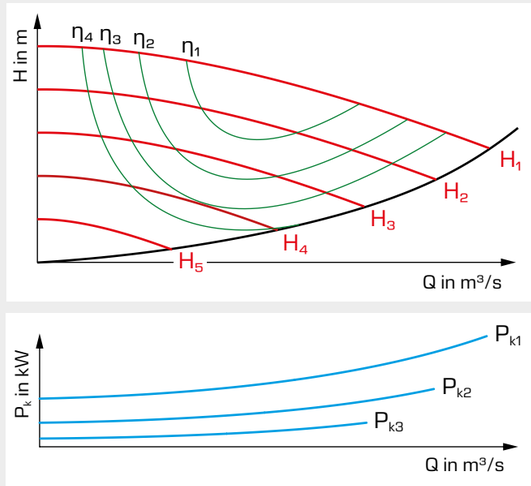


**H₁...H₅** pump characteristics depending on the speed,
**η₁...η₅** efficiency depending on the speed,
system characteristic;
**$P_{k1}$...$P_{k3}$** coupling power depending on the speed

### Characteristic zone of centrifugal pumps

The characteristic values of a centrifugal pump are plotted in a characteristic zone over the flow rate **Q**. The main characteristic is the head **H** or the delivery pressure **p**.

The lines of equal efficiency **η** are also entered in the characteristic zone.

Another important representation is the plot of the coupling power $P_K$ and the **NPSH** over the flow **Q**.

Important physical laws in centrifugal pumps:

- the flow rate **Q** is linearly dependent on the speed **n**. $Q = f(n)$
- the head **H** is dependent on the square of the speed **n**. $H = f(n^2)$
- the power $P_K$ is dependent on the third power of the speed **n**. $P_K = f(n^3)$

$$n_q = n \cdot \frac{Q^{1/2}}{H^{3/4}}$$

The similarity of different pumps is described by the dimensionless characteristic of the specific speed $n_q$.

### Operating behaviour and operating points of centrifugal pumps

At the operating point the delivery pressure generated by the pump is in equilibrium with the resistance of the pipe network at a certain flow rate. The operating point is where the pump characteristic intersects the resistance characteristic of the pipe network.

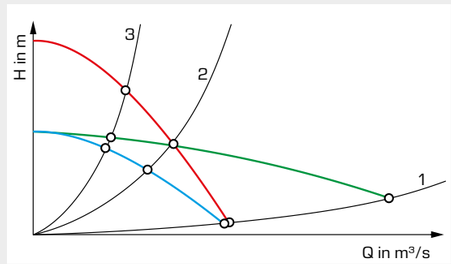


Pump characteristics

- single pump,
- two pumps connected in series,
- two pumps connected in parallel;

Pipe network characteristics

**1** system with low resistance,
**2** system with medium resistance,
**3** system with large resistance

# HM 283
## Experiments with a centrifugal pump

### Description

- **determination of characteristic pump variables**
- **closed water circuit**
- **GUNT software for data acquisition, visualisation and operation**
- **part of the GUNT-Labline fluid energy machines**

Centrifugal pumps are turbomachines which are used to transport fluids. The rotation of the pump impeller generates centrifugal forces. These forces are used to deliver the water.

The experimental unit provides the basic experiments to get to know the operating behaviour and the important characteristic variables of centrifugal pumps.

HM 283 features a closed water circuit with water tank and a centrifugal pump with variable speed via frequency converter. The pump housing is transparent. This enables to observe the pump impeller in operation and the occurrence of cavitation.

Valves in the inlet and outlet of the pump allow the setting of different pressure conditions.

The experimental unit is fitted with sensors for pressure, temperature and flow rate. The microprocessor-based measuring technique is well protected in the housing. The measured values are transmitted directly to a PC via USB where they can be analysed using the software included.

All the advantages of software-supported experiments with operation and evaluation are offered by the GUNT software and the microprocessor.

### Learning objectives/experiments

- principle of operation of a centrifugal pump
- recording of pump characteristics
- effect of speed on head
- effect of speed on flow rate
- determination of pump efficiency
- cavitation effects
- effect of incorrect direction of rotation



# HM 283
## Experiments with a centrifugal pump

1 water tank, 2 temperature sensor, 3 valve at intlet, 4 pressure sensor at inlet, 5 pump, 6 pressure sensor at outlet, 7 motor, 8 flow meter, 9 valve at outlet

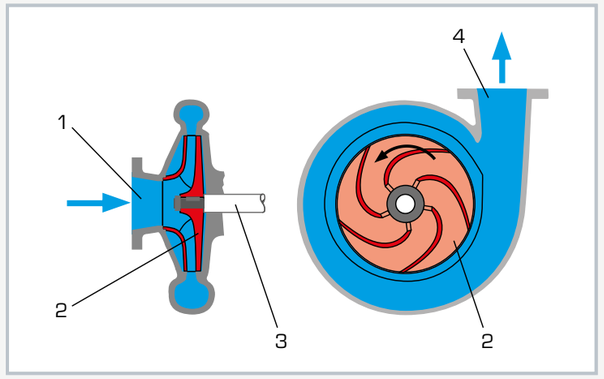


Principle of operation of a centrifugal pump
1 water inlet, 2 pump impeller, 3 pump shaft, 4 water outlet

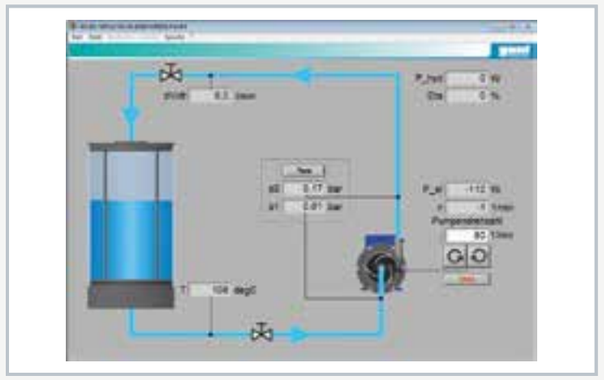

Operating interface of the powerful software

### Specification

[1] functioning and operating behaviour of a centrifugal pump
[2] closed water circuit contains centrifugal pump with drive motor and a transparent water tank
[3] transparent housing for observing the pump impeller
[4] variable speed via frequency converter
[5] adjustment of pressure conditions at inlet and outlet side of the pump by valves
[6] sensors for pressure at inlet and outlet side of the pump, temperature and flow rate
[7] microprocessor-based measuring technique
[8] display and evaluation of the measured values as well as operation of the unit via software
[9] GUNT software with control functions and data acquisition via USB under Windows 7, 8.1, 10

### Technical data

Centrifugal pump with drive motor
- power consumption: 370W
- speed: 0...3000min$^{-1}$
- max. flow rate: approx. 40L/min
- max. head: approx. 10m

Water tank: approx. 15L

Measuring ranges
- pressure (inlet): ±1bar
- pressure (outlet): 0...5bar
- flow rate: 3,5...50L/min
- temperature: 0...130°C

230V, 50Hz, 1 phase
230V, 60Hz, 1 phase; 120V, 60Hz, 1 phase
UL/CSA optional
LxWxH: 660x590x720mm
Weight: approx. 46kg

### Required for operation

PC with Windows

### Scope of delivery

1 experimental unit
1 GUNT software CD + USB cable
1 set of instructional material

# HM 284
## Series and parallel configuration of pumps

### Description

- **characteristic behaviour of pumps during single pump operation, series or parallel configuration**
- **closed water circuit**
- **GUNT software for data acquisition, visualisation and operation**
- **part of the GUNT-Labline fluid energy machines**

In complex systems, pumps can be connected in series or in parallel. In serial operation the heads of the pumps are added and in parallel operation the flow rates (capacities) of the pumps are added.

The experimental unit provides the determination of the characteristic behavior for single operation and interaction of two pumps.

HM 284 features a closed water circuit with a water tank and two centrifugal pumps with drive motors. The speed of one motor is variably adjustable by a frequency converter. The other pump is fitted with a motor with fixed speed, this pump can be added to the system.

The impellers of both pumps are mounted in transparent housings and can be observed during operation. Valves enable to easily switch change between single pump, series or parallel pump operation. The system behaviour is analyzed with the aid of a valve at the outlet of the pump adjusting the flow resistance.

The experimental unit is fitted with sensors for pressure and flow rate. The microprocessor-based measuring technique is well protected in the housing. The measured values are transmitted directly to a PC via USB where they can be analysed using the software included.

All the advantages of software-supported experiments with operation and evaluation are offered by the GUNT software and the microprocessor.

### Learning objectives/experiments

- operating behaviour of centrifugal pumps
  - single pump
  - series configuration
  - parallel configuration
- recording of pump curves
- determination of pump efficiencies
- recording of system characteristic



# HM 284
## Series and parallel configuration of pumps

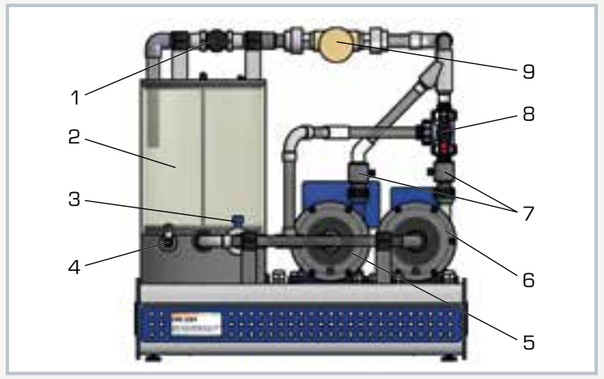


1 valve for adjusting the flow rate, 2 water tank, 3 valve for configurating parallel/series operation, 4 water drain, 5 pump with fixed speed, 6 pump with variable speed, 7 pressure sensor at outlet, 8 three-way valve for parallel/series operation, 9 flow meter

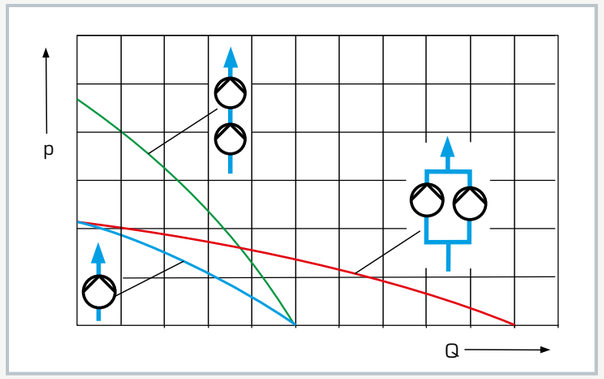


Characteristic curves at different operating modes
blue: single pump operation, red: parallel configuration of pumps, green: series configuration of pumps; p pressure, Q flow rate

Operating interface of the powerful software

### Specification

[1] investigation and operating behaviour of pumps in various operating modes
[2] single pump, series or parallel pump operation, configurable via valves
[3] closed water circuit contains centrifugal pumps with drive motor and a transparent water tank
[4] one pump with variable speed and one pump with fixed speed
[5] adjustment of flow resistance by a valve at outlet of the pump
[6] sensors for pressure at inlet and outlet of the pumps and flow rate
[7] microprocessor-based measuring technique
[8] display and evaluation of the measured values as well as operation of the unit via software
[9] GUNT software with control functions and data acquisition via USB under Windows 7, 8.1, 10

### Technical data

Centrifugal pumps with motors
- power consumption: 370W each

Pump with variable speed: 0...3300min$^{-1}$
- max. flow rate: 40L/min
- max. head: 10m

Pump with fixed speed: approx. 2800min$^{-1}$
- max. flow rate: 40L/min
- max. head: 10m

Water tank: approx. 15L

Measuring ranges
- pressure (inlet): ±1bar
- pressure (outlet): 2x 0...5bar
- flow rate: 10...140L/min

230V, 50Hz, 1 phase
230V, 60Hz, 1 phase; 120V, 60Hz, 1 phase
UL/CSA optional
LxWxH: 670x600x670mm
Weight: approx. 62kg

### Required for operation

PC with Windows

### Scope of delivery

1 experimental unit
1 GUNT software CD + USB cable
1 set of instructional material

# HM 300
## Hydraulic circuit with centrifugal pump

### Description

- **measurement of pressure conditions in valves and fittings and a pump**
- **measurement of the flow rate**
- **clearly arranged pump circuit**

Hydraulic circuits are designed according to their task and their area of application. Designing hydraulic circuits requires knowledge of flow behaviour and pressure losses in valves and fittings, as well as characteristics of the pump. A hydraulic circuit can be compared to an electrical circuit. This analogy can be made evident in the HM 300 experimental unit.

The HM 300 experimental unit includes a centrifugal pump, a rotameter, a diaphragm valve, a water tank and various other valves and fittings. After filling the system once the experimental unit can be operated independently from the water supply.

The flow is adjusted by valves and read off a rotameter. The pressure measuring points in the pipe system are designed as annular chambers. This creates a largely interference-free pressure measurement. Also supplied is an electronic pressure meter for differential pressure measurement. The pressure measurement points are connected in pairs to the pressure meter and the respective differential pressure read off the display.

### Learning objectives/experiments

- recording the pump characteristic
- pressure losses at various valves and fittings depending on the flow
- determination of the operating point in a hydrostatic circuit



# HM 300
## Hydraulic circuit with centrifugal pump

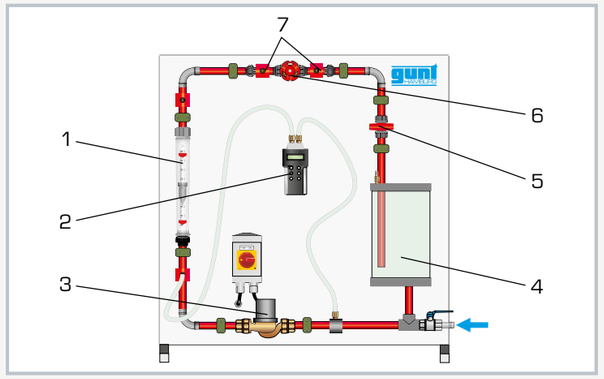


1 flow meter, 2 pressure meter, 3 pump, 4 tank, 5 valve for throttling, 6 diaphragm valve, 7 pressure measuring points

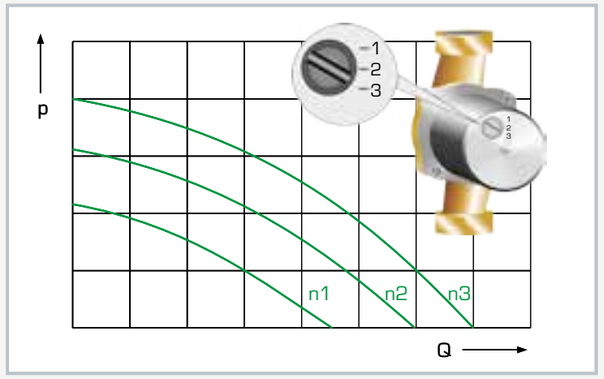


Characteristics of the pump at different speeds: n speed, p pressure, Q flow rate

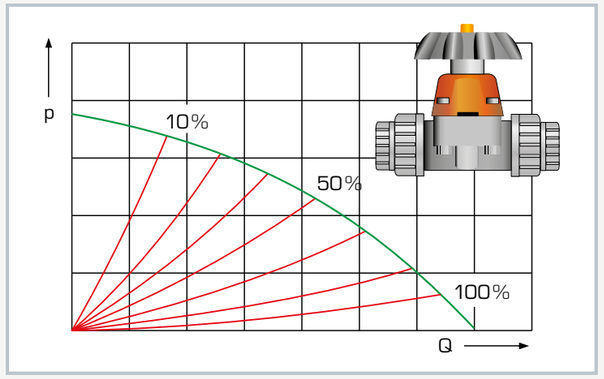


Characteristics of the valve at different degrees of openness up to 100%: p pressure, Q flow rate

### Specification

[1] pressure conditions at various measuring objects
[2] measuring objects: pump, flow meter, diaphragm valve
[3] centrifugal pump with 3 different speeds
[4] closed water circuit
[5] flow can be adjusted via valves
[6] flow measurement using rotameter
[7] annular chambers allow easy measurement of pressure
[8] differential pressure measurement using electronic pressure meter

### Technical data

Tank
- volume: 8,5L

Pump:
- max. power consumption: 70W
- max. flow rate: $5m^3/h$
- max. head: 6m
- three switching stages for speed selection

Measuring ranges
- flow rate: 150...1600L/h
- differential pressure: ±350mbar

230V, 50Hz, 1 phase
230V, 60Hz, 1 phase; 120V, 60Hz, 1 phase
UL/CSA optional
LxWxH: 1000x610x1100mm
Weight: approx. 55kg

### Scope of delivery

1 experimental unit
1 pressure meter
1 set of instructional material

# HM 332
## Pump characteristics for parallel and series configuration

### Description

- **operation of centrifugal pumps in parallel and series configuration**
- **identification of pump and system characteristics**
- **GUNT software for data acquisition**

In practice, several pumps are often installed either in parallel or in series configuration for economic reasons. In in parallel configuration the pumps operate in a common pipe. This requires that the pumps used in each case can achieve the same head. Parallel configurations offer the advantage that when demand is low only one pump works and other pumps are switched on as the flow rate increases. In series configuration pumps with equal flow rates are arranged in a row. This arrangement allows the bridging of large heads and is often more cost-effective than the use of a single pump with large head.

The HM 332 trainer studies the cooperation of two centrifugal pumps and illustrates the differences in parallel and series configuration. The metrology components used are common in industry and therefore closely related to practice.

The trainer has a closed water circuit and is equipped with two identical pumps that are driven by speed-controlled motors. The rotational speed of the motors for the centrifugal pumps can be adjusted via frequency converters. All motors are mounted on swivel bearings so that the drive torque can be measured via a force sensor, allowing the mechanical drive power to be determined.

Sensors detect the pressures at inlet and outlet of the pumps. The flow rate is measured by an electromagnetic flow meter. Relevant measured values are read from digital displays and can be transmitted simultaneously via USB directly to a PC where they can be analysed using the software included. The performance data of the pump and losses in the pipe are calculated in the software and shown in the form of characteristics. Characteristic parameters of pumps are determined from the measured values. Furthermore, students are familiarised with the operating behaviour of centrifugal pumps and can practise the correct way to start up and shut down such a pump system.

### Learning objectives/experiments

- investigate behaviour of centrifugal pumps in operation
- recording pump characteristics
- recording system characteristics
- determining efficiency
- investigation of series and parallel configuration of pumps
- starting up and shutting down pump systems



HM 332
Pump characteristics for parallel and series configuration

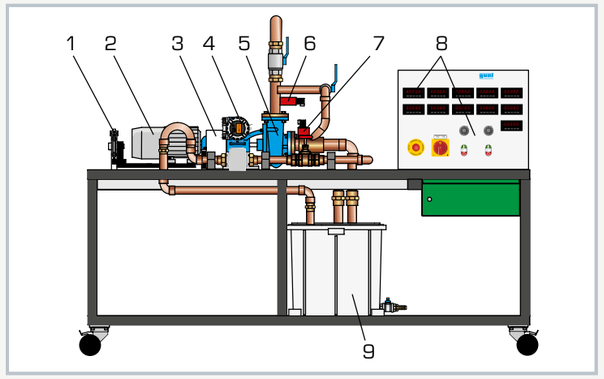


1 force sensor, 2 drive motor, 3 speed sensor, 4 electromagnetic flow meter, 5 pump, 6 pressure sensor at outlet, 7 pressure sensor at inlet, 8 displays and controls, 9 supply tank

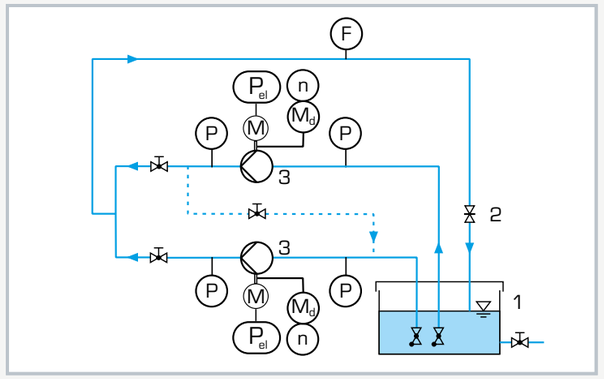


Parallel configuration of pumps: 1 supply tank, 2 valve for adjusting the flow rate, 3 pump with drive motor; P pressure, F flow rate, n speed, $M_d$ torque, $P_{el}$ power

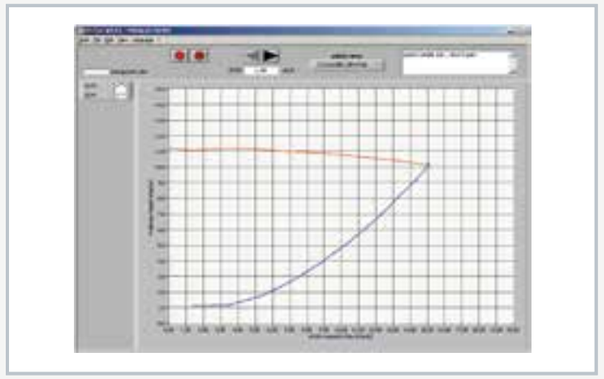

Software screenshot: red: pump characteristic, blue: system characteristic with parallel configuration of pumps

### Specification

[1] trainer with 2 centrifugal pumps which are operated in series or parallel configuration
[2] closed water circuit
[3] drive motors with adjustable speed
[4] motor with pendulum bearing, torque measurement via lever arm and force sensor
[5] inductive speed sensor on the motor
[6] electromagnetic flow meter
[7] digital displays for power consumption, torque, speed, pressure and flow rate
[8] GUNT software for data acquisition via USB under Windows 7, 8.1, 10

### Technical data

2 pumps
- max. flow rate: 21m³/h
- max. head: 16,9m

2 drive motors
- power output: 1,1kW
- speed range: 0...3000min⁻¹

Supply tank: 96L

Measuring ranges
- pressures:
  - inlet pump 1: -1...0,6bar
  - outlet pump 1: 0...2,5bar
  - inlet pump 2: -1...3bar
  - outlet pump 2: 0...6bar
- flow rate: 0...480L/min
- speed: 2x 0...3000min⁻¹
- torque: 2x 0...10Nm
- power: 2x 2,2kW

230V, 50Hz, 1 phase
230V, 60Hz, 1 phase
230V, 60Hz, 3 phases
LxWxH: 2000x750x1690mm
Weight: approx. 278kg

### Required for operation

PC with Windows recommended

### Scope of delivery

1 trainer
1 GUNT software CD + USB cable
1 set of instructional material

Basic knowledge

# Positive displacement pumps

## Fundamental principles of positive displacement pumps

In positive displacement pumps the energy is transferred to the fluid hydrostatically. In the hydrostatic transfer of energy a displacement body reduces a working chamber filled with fluid and pumps the fluid into the pipe. In this case, the displacement body applies a pressure to the fluid. When the working chamber expands it is refilled with fluid from the pipe.

The work done $W_s$ results from the product of the displacement force **F** and displacement distance s. This equation can also be written as the product of displaced volume $V_s$ and delivery pressure **p**.

$$W_s = F \cdot s = A \cdot p \cdot s = V_s \cdot p$$

The power **P** transferred to the fluid is calculated from the flow rate **Q** and delivery pressure **p**.

$$P = Q \cdot p$$

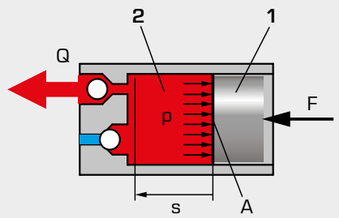


**1** displacement body, **2** working chamber;
**Q** flow rate, **F** displacing force, **A** area, **p** delivery pressure,
**s** displacement distance

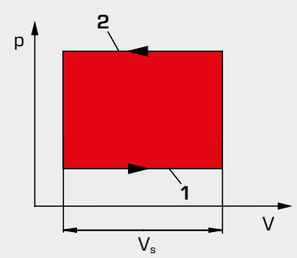


Representation of the pump process of a positive displacement pump in the p,V diagram.

During suction **1** the volume increases at low pressure.
Pushing out **2** occurs as the volume reduces at high pressure.
The enclosed area corresponds to the work done on the fluid.

### Advantages of positive displacement pumps

- flow rate only slightly dependent on the head; thus well suited for dosing and injection pumps
- suitable for high pressures; only one stage required
- very good suction capacity, even with gas content
- suitable for high viscosity (pastes)
- flow rate can be adjusted very precisely and reproducibly via stroke and stroke rate
- cyclical delivery possible
- well suited for low drive speeds
- direct pneumatic, hydraulic or electromagnetic drive possible with oscillating pumps

### Disadvantages of positive displacement pumps

- principle of operation does not include a pressure restriction, therefore safety or pressure relief valves are necessary
- in oscillating positive displacement pumps vibration-free operation is only possible with complex mass balancing
- oscillating positive displacement pumps less suitable for high speeds
- in oscillating positive displacement pumps, pulsating flow is necessary, as is a pulsation dampener
- in some more complicated designs, fault-prone construction with valves
- larger number of wear parts than centrifugal pumps

## Types of positive displacement pumps

In positive displacement pumps a distinction is made between **oscillating** and **rotary pumps**.

### Examples of oscillating positive displacement pumps

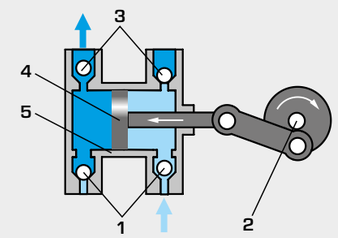


Piston pump

Structure of oscillating positive displacement pumps

**1** suction valve,
**2** crank mechanism,
**3** pressure valve,
**4** piston,
**5** cylinder,
**6** diaphragm,
**7** eccentric mechanism

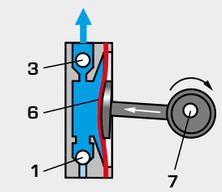


Diaphragm pump

### Examples of rotary positive displacement pumps

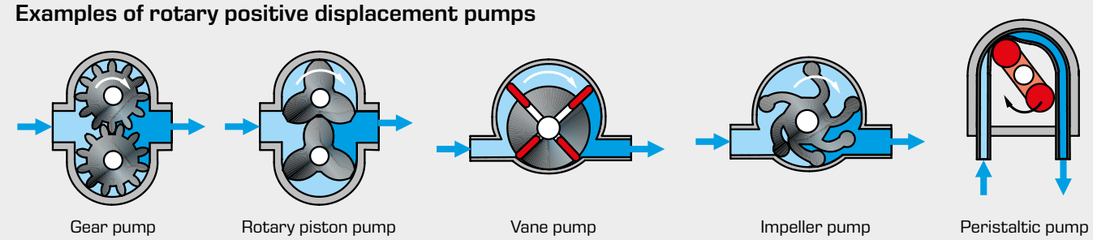


Since rotary positive displacement pumps usually have large working chambers that are filled and emptied in overlap, these pumps deliver more evenly than oscillating positive displacement pumps with only smaller working chambers. The rotating displacement bodies mean the pumps have good mass balancing and low vibrations even when running at higher speeds.

For applications where a pulsed delivery is desired, such as in fuel injection pumps for engines, only oscillating positive displacement pumps are suitable. Oscillating positive displacement pumps generally have a more complicated design because the rotating drive must be converted into an oscillating stroke movement. This is done via a crank, eccentric or cam mechanism. In addition, at least one pressure control valve is necessary to prevent backflow of the fluid.

### Operating behaviour and operating points of a positive displacement pump

Positive displacement pumps have very steep characteristics. The flow rate **Q** is almost independent of the head **H**. The maximum head $H_{max}$ is usually limited by a pressure relief valve or safety valve. Therefore, the flow rate is almost independent of the system characteristic. In contrast to centrifugal pumps, the flow rate cannot be regulated by increasing the system resistance. This is realised by a change in the rotational speed ($n_1$-$n_3$) or the displaced volume. The black curves represent the system characteristics at different speeds **1...3**.

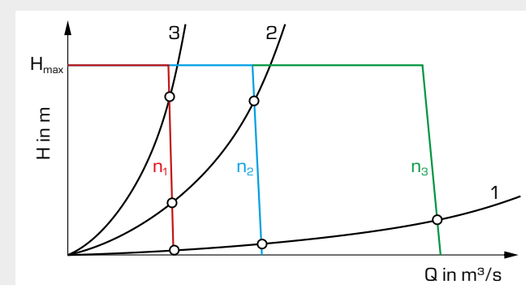

# HM 285
## Experiments with a piston pump

### Description

- **illustrative model of a typical positive displacement pump**
- **closed water circuit**
- **GUNT software for data acquisition, visualisation and operation**
- **part of the GUNT-Labline fluid energy machines**

Piston pumps belong to the group of positive displacement pumps. They transport the medium by a reciprocating motion of a piston in the pump working space, called stroke. The stroke creates a suction hence vacuum effect used to deliver the water. Piston pumps are used when high pressures are to be generated. The flow rate of piston pumps is independent of the head and is determined only by speed. Its good suction performance is outstanding.

The experimental unit provides the basic experiments to get to know the operating behaviour and the important characteristic variables of piston pumps.

HM 285 features a closed water circuit with water tank, a piston pump with variable speed via a frequency converter and an air vessel.

The piston of the pump is mounted in a transparent housing and can be observed during operation. The cycle that takes place (intake and discharge of water) can be shown clearly in the p-V diagram. The pulsating pressure curve of the pump can be damped with the aid of the air vessel. Flow rate and head are adjusted via a needle valve and overflow valve.

The experimental unit is fitted with sensors for pressure and flow rate. One pressure sensor measures the pressure at the outlet of the pump, another one measures the pressure in the inside of the cylinder. The position of the piston rod is measured by an angle sensor. This allows the determination of the cylinder volume. The microprocessor-based measuring technique is well protected in the housing. The measured values are transmitted directly to a PC via USB where they can be analysed using the software included.

All the advantages of software-supported experiments with operation and evaluation are offered by the GUNT software and the microprocessor.

### Learning objectives/experiments

- principle of operation of a piston pump
- recording of pump characteristics
- pressure curves of delivery pressure and cylinder pressure
- influence of pulsation damping
- p-V diagram
- determination of efficiencies



HM 285
Experiments with a piston pump

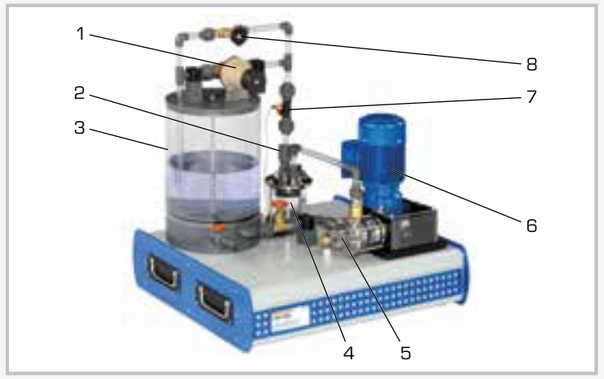


1 overflow valve, 2 pressure sensor at outlet, 3 water tank, 4 air vessel, 5 piston pump, 6 motor, 7 flow meter, 8 needle valve for adjusting the flow rate

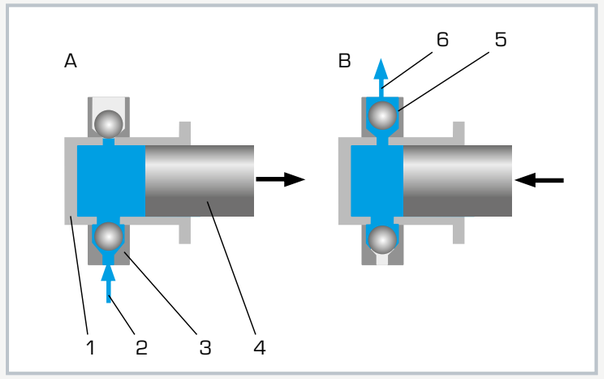


Principle of operation of a piston pump: A intake, B discharge
1 cylinder, 2 water inlet, 3 valve at inlet, 4 plunger piston, 5 valve at outlet, 6 water outlet

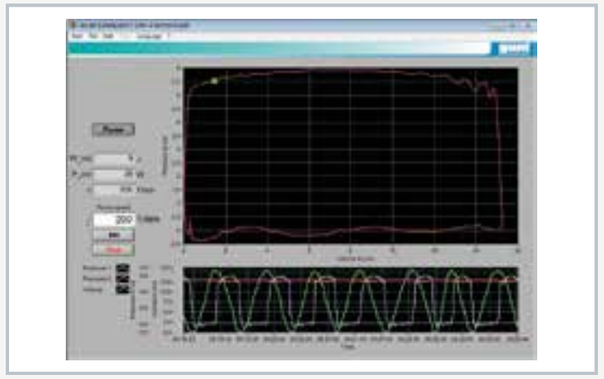

Operating interface of the powerful software

### Specification

[1] functioning and operating behaviour of a piston pump
[2] closed water circuit contains piston pump with variable speed via frequency converter, transparent water tank and air vessel
[3] transparent housing for observing the pump piston
[4] needle valve for adjusting the flow rate
[5] overflow valve for adjusting the head
[6] pulsation damping of the head using air vessel with bleed valve
[7] sensors for pressure at outlet and in the cylinder of the pump, flow rate and crank angle
[8] microprocessor-based measuring technique
[9] display and evaluation of the measured values as well as operation of the unit via software
[10] GUNT software with control functions and data acquisition via USB under Windows 7, 8.1, 10

### Technical data

Piston pump
- speed: 30...180min$^{-1}$
- max. flow rate: 135L/h
- max. head: 40m

Drive motor
- power: 180W

Gear transmission ratio: i=7,5
Overflow valve: 1...4bar

Measuring ranges
- pressure (cylinder): 0...5bar
- pressure (outlet): 0...5bar
- crank angle: 0...360°
- flow rate: 0,2...6L/min

230V, 50Hz, 1 phase
230V, 60Hz, 1 phase; 120V, 60Hz, 1 phase
UL/CSA optional
LxWxH: 670x590x740mm
Weight: approx. 49kg

### Required for operation

PC with Windows

### Scope of delivery

1 experimental unit
1 GUNT software CD + USB cable
1 set of instructional material

# HM 286
## Experiments with a gear pump

### Description

- **illustrative model of a gear pump**
- **closed oil circuit**
- **GUNT software for data acquisition, visualisation and operation**
- **part of the GUNT-Labline fluid energy machines**

Gear pumps belong to the group of positive displacement pumps with a continuous flow. Two counter-rotating gears transport the medium. The transported medium is between the housing and the tooth spaces. The pulsation-free flow increases linearly with speed. These pumps are particularly suitable for the generation of medium-high pressure at low flow rates.

The experimental unit provides the basic experiments to get to know the operating behaviour and the most important characteristic variables of gear pumps.

HM 286 features a closed circuit with a tank and a gear pump with variable speed via frequency converter. The pump gears are mounted in a transparent housing and can be observed during operation.

Flow rate and head are adjusted via a needle valve and an overflow valve. Oil is used as the medium.

The experimental unit is fitted with sensors for pressure and temperature. The oval wheel meter is especially used for the accurate flow measurement of viscous liquids. Oval wheel meters operate on the positive displacement principle with two precise oval gear wheels. The microprocessor-based measuring technique is well protected in the housing. The measured values are transmitted directly to a PC via USB where they can be analysed using the software included.

All the advantages of software-supported experiments with operation and evaluation are offered by the GUNT software and the microprocessor.

### Learning objectives/experiments

- principle of operation of a gear pump
- recording of pump characteristics
- relationship between head and speed
- effect of pressure limitation
- determination of efficiencies



HM 286
Experiments with a gear pump

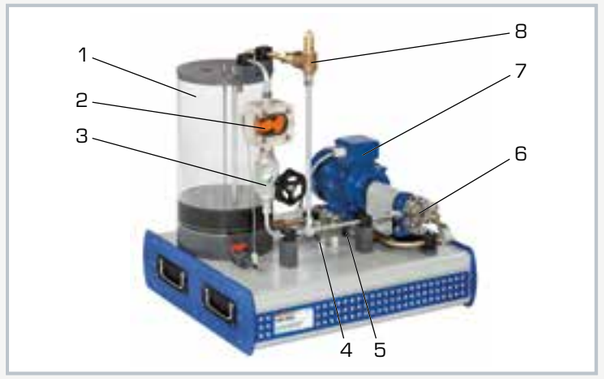


1 tank, 2 flow meter (oval wheel meter), 3 needle valve, 4 pressure sensor at outlet, 5 pressure sensor at inlet, 6 gear pump, 7 drive, 8 overflow valve for adjusting the head

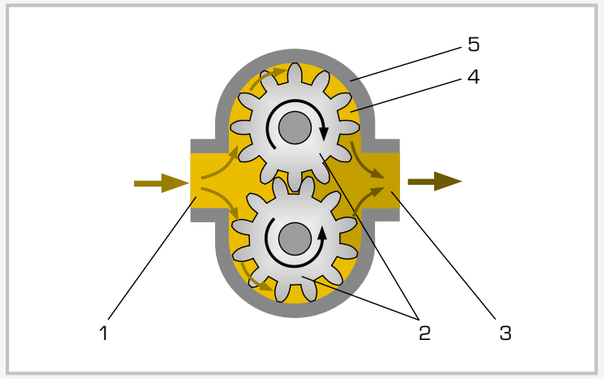


Principle of operation of a gear pump
1 oil inlet, 2 gears, 3 oil outlet, 4 tooth spaces as pumping chamber, 5 housing

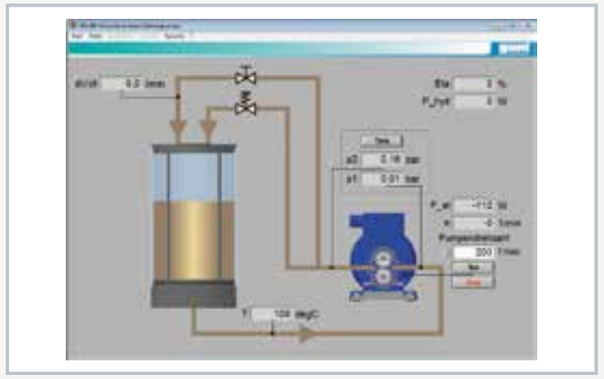

Operating interface of the powerful software

### Specification

[1] functioning and operating behaviour of a gear pump
[2] closed oil circuit contains a gear pump with variable speed via frequency converter and a transparent tank
[3] transparent housing for observing the pump gears
[4] needle valve for adjusting the flow rate
[5] overflow valve for adjusting the head
[6] sensors for temperature and pressure at inlet and outlet of the pump
[7] oval wheel meter as flow sensor
[8] microprocessor-based measuring technique
[9] display and evaluation of the measured values as well as operation of the unit via software
[10] GUNT software with control functions and data acquisition via USB under Windows 7, 8.1, 10

### Technical data

Gear pump with speed-controlled drive
- power consumption: 370W
- nominal speed: 200...1000min$^{-1}$
- max. flow rate: approx. 15cm$^3$ per revolution
- max. head: approx. 100m

Overflow valve: 0...5,5bar

Measuring ranges
- pressure (inlet): ±1bar
- pressure (outlet): 0...5bar
- flow rate: 0...25L/min
- temperature: 0...100°C

230V, 50Hz, 1 phase
230V, 60Hz, 1 phase; 120V, 60Hz, 1 phase
UL/CSA optional
LxWxH: 670x590x750mm
Weight: approx. 50kg

### Required for operation

PC with Windows

### Scope of delivery

1 experimental unit
1 oil 5L (ISO VG 100)
1 GUNT software CD + USB cable
1 set of instructional material

# 6 Components in piping systems and plant design

## Introduction


**Overview** Components in piping systems and plant design 314


## Cutaway models


**HM 700.01** Cutaway model: standard orifice plate 316
**HM 700.02** Cutaway model: flow nozzle 317
**HM 700.03** Cutaway model: standard Venturi meter 317
**HM 700.04** Cutaway model: straight-way valve 317
**HM 700.05** Cutaway model: corner valve 317
**HM 700.06** Cutaway model: angle seat valve 317
**HM 700.07** Cutaway model: non-return valve 317
**HM 700.08** Cutaway model: pressure reducing valve 317
**HM 700.09** Cutaway model: strainer 317
**HM 700.10** Cutaway model: gate valve 318
**HM 700.11** Cutaway model: straight-way plug valve 318
**HM 700.12** Cutaway model: three-way plug valve 318
**HM 700.13** Cutaway model: ball valve 318
**HM 700.14** Cutaway model: safety valve 318
**HM 700.15** Cutaway models: various screwed pipe connections 318
**HM 700.16** Cutaway models: pressure gauges 318
**HM 700.17** Cutaway model: centrifugal pump 319
**HM 700.20** Cutaway model: piston pump 319
**HM 700.22** Cutaway model: gear pump 319
**VS 101** Cutaway model: underground hydrant 320
**VS 102** Cutaway model: resilient seated gate valve 321
**VS 103** Cutaway model: screw down valve 321
**VS 104** Cutaway model: changeover valve 321
**VS 105** Cutaway model: gas meter 321
**VS 106** Cutaway model: backflow preventer 321
**VS 107** Cutaway model: non-return butterfly valve 321
**VS 108** Cutaway model: water meter 321
**VS 109** Cutaway model: strainer 321


## Assembly exercises valves and fittings


**Overview** Assembly exercises valves and fittings 322
**MT 154** Assembly exercise: shut-off valve 324
**MT 157** Assembly exercise: butterfly valve and non-return valve 326
**MT 156** Assembly exercise: wedge gate valve and angle seat valve 328
**MT 158** Assembly exercise: ball valve and shut-off valve 330
**MT 162** Hydraulic valves and fittings test stand 332


## Assembly & maintenance exercises pumps


**Overview** Assembly & maintenance exercises pumps 334
**MT 180** Assembly & maintenance exercise: centrifugal pump 336
**MT 181** Assembly & maintenance exercise: multistage centrifugal pump 338
**MT 185** Assembly & maintenance exercise: in-line centrifugal pump 340
**MT 184** Assembly & maintenance exercise: piston pump 342
**MT 183** Assembly & maintenance exercise: diaphragm pump 344
**MT 186** Assembly & maintenance exercise: gear pump 346
**MT 182** Assembly & maintenance exercise: screw pump 348


## Design of complex piping and plant systems


**Overview** HL 960 Assembly station pipes and valves and fittings 350
**HL 960** Assembly station: pipes and valves and fittings 352
**HL 960.01** Assembly and alignment of pumps and drives 354
**Overview** Assembly and maintenance excercises pipes, valves, fittings and pumps 356

# Components in piping systems and plant design

The demonstration and teaching of fluid mechanical processes in valves and fittings and pumps is extremely important when training engineers, technicians and skilled workers. These complex issues are difficult to teach without direct practical relevance.

The topics of planning, assembly, commissioning and maintenance are closely linked. Extensive knowledge of equipment design and assembly are required for commissioning and maintenance. Planning and design of pipe systems require detailed knowledge of the individual steps and their sequence. GUNT offers a comprehensive range of educationally valuable section models, assembly and maintenance exercises from the field of pipe systems and plant construction.

## Section models of valves and fittings, pumps and meters

- familiarisation with components and their function
- insight into structural details
- comparison of technical illustrations and illustrative models

## Assembly exercises for valves and fittings

- structure and function of typical valves and fittings in pipe systems
- assembly and disassembly for maintenance and repair
- comparison of different valves and fittings
- leak tests

## Assembly and maintenance exercises for pumps

- structure and function of typical pumps in pipe systems
- assembly and disassembly for maintenance and repair
- systematic troubleshooting and error evaluation
- maintenance and repair processes

## Design of complex piping and plant systems

- design of piping and plant systems according to specifications
- professional preparation and execution of plant assembly and disassembly
- component selection and preparation of requirements lists
- functional testing, leak testing, operational measurements

# HM 700 Cutaway models of original parts from pipeline constructions

**HM 700.01**
Cutaway model:
standard orifice plate

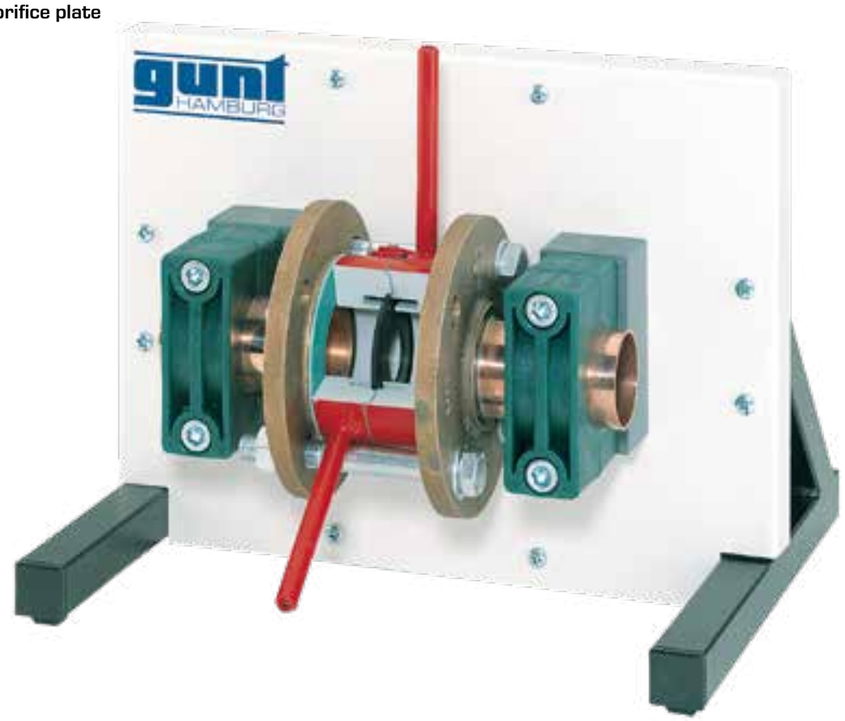

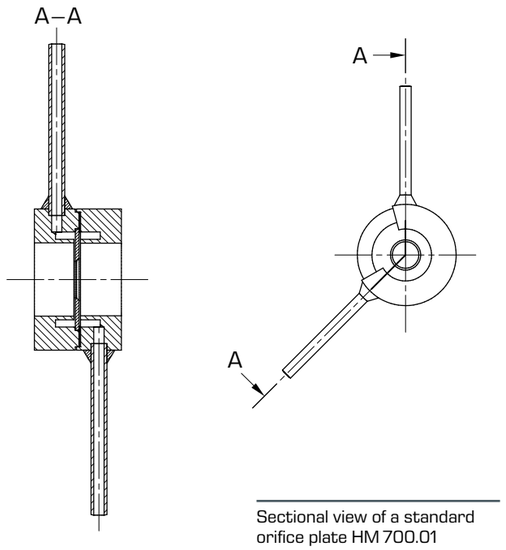


Sectional view of a standard orifice plate HM 700.01

**Commercial fittings as cutaway models**

- familiarisation with real components and their functions
- detailed view and principle of operation of the components
- all fittings operate normally, the cuts do not hinder moving parts

The cutaway models are actual fittings and components as used in real pipework installations, e.g. valves, an orifice plate, a measuring nozzle, shut-off fittings, a safety valve and pumps.

The models are clearly laid out on display panels or base plates.

A short description and a sectional view are included, so the models can also be used for technical drawing exercises.

**HM 700.02**
Cutaway model:
flow nozzle

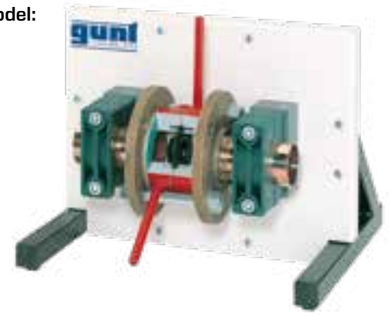

**HM 700.03**
Cutaway model:
standard Venturi meter

**HM 700.04**
Cutaway model:
straight-way valve

**HM 700.05**
Cutaway model:
corner valve

**HM 700.06**
Cutaway model:
angle seat valve

**HM 700.07**
Cutaway model:
non-return valve

**HM 700.08**
Cutaway model:
pressure reducing valve

**HM 700.09**
Cutaway model:
strainer

## HM 700.10
**Cutaway model: gate valve**

## HM 700.11
**Cutaway model: straight-way plug valve**

## HM 700.12
**Cutaway model: three-way plug valve**

## HM 700.13
**Cutaway model: ball valve**

## HM 700.14
**Cutaway model: safety valve**

## HM 700.15
**Cutaway models: various screwed pipe connections**

## HM 700.16
**Cutaway models: pressure gauges**

## HM 700.17
**Cutaway model: centrifugal pump**

- familiarisation with components and function

The model shows a standard centrifugal pump that has been prepared as a cutaway model and fitted to a base plate.

The impeller and shaft can be rotated.

## HM 700.20
**Cutaway model: piston pump**

- familiarisation with components and function

A double-acting piston pump with disc piston is shown in cutaway, revealing all moving parts.
The model is mounted on a base plate with carrying handles.

## HM 700.22
**Cutaway model: gear pump**

- familiarisation with components and function

A simple gear pump that has been prepared as a cutaway model and fitted to a base plate. By rotating the drive shaft it is possible to clearly demonstrate the function.

# Cutaway models from water and gas mains

**VS 101**
**Cutaway model: underground hydrant**

- familiarisation with components and their functions
- view of the details and understanding the principle of operation
- movable parts retain functionality

The cutaway models shown on the following page illustrate commercial components used for drinking water and gas plumbing, such as shut-off fittings, backflow prevention valves and volumetric totalisers. These are similar in concept and design to the VS 101 model, but are mounted on vertical display panels.

A short description and a sectional view are included. In this way the models can also be used for technical drawing exercises.

The VS 101 is a normal underground hydrant made of cast iron. Hydrants are points for drawing water from the public water supply for emergency services or street cleaning. The location of the cuts allow the design details to be clearly seen.

The cutaway model is mounted on a robust base plate. Two handles make it easier to carry.

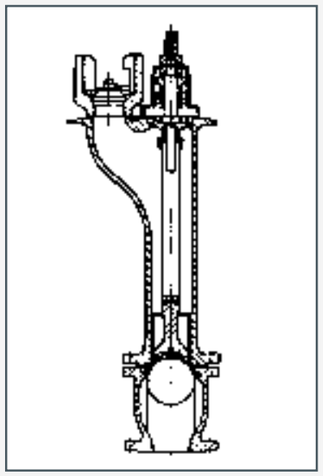

Sectional view of the underground hydrant

**VS 102**
**Cutaway model: resilient seated gate valve**

**VS 103**
**Cutaway model: screw down valve**

**VS 104**
**Cutaway model: changeover valve**

**VS 105**
**Cutaway model: gas meter**

**VS 106**
**Cutaway model: backflow preventer**

**VS 107**
**Cutaway model: non-return butterfly valve**

**VS 108**
**Cutaway model: water meter**

**VS 109**
**Cutaway model: strainer**

# Assembly exercises valves and fittings

Valves and Fittings are pipe elements that are used in particular to shut off or adjust material flows. These primarily include valves, gate valves and taps. Different valves and fittings are suitable for different tasks depending on the way in which they work.

With the MT series of devices on the topic of assembly exercises for valves and fittings, GUNT offers prospective installation engineers and system mechanics the opportunity to learn about the structure, function and maintenance of valves, gate valves and ball valves. After assembly the component can be tested for leaks with hydraulic valves and fittings test stand MT 162.

**The individual assembly exercises are suitable for collaborative group work or project work**

**Assembly exercises using real world examples**

**Comparison of different valves and fittings and their operation**

- quality control of assembly with hydraulic valves and fittings test stand MT 162
- proper connection of valves and fittings
- leak testing of housings and flange seals

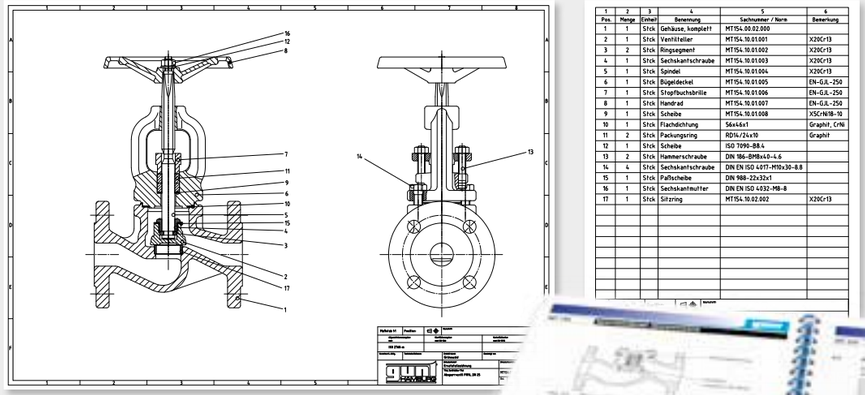

| 1 | 2 | 3 | 4 | 5 | 6 |
|---|---|---|---|---|---|
| Pos. | Menge | Einheit | Benennung | Sachnummer / Norm | Bemerkung |
| 1 | 1 | Stck | Gehäuse, komplett | MT154.00.02.000 | |
| 2 | 1 | Stck | Ventilteller | MT154.10.01.001 | X20Cr13 |
| 3 | 2 | Stck | Ringsegment | MT154.10.01.002 | X20Cr13 |
| 4 | 1 | Stck | Sechskantschraube | MT154.10.01.003 | X20Cr13 |
| 5 | 1 | Stck | Spindel | MT154.10.01.004 | X20Cr13 |
| 6 | 1 | Stck | Bügeldeckel | MT154.10.01.005 | EN-GJL-250 |
| 7 | 1 | Stck | Stopfbuchsbrille | MT154.10.01.006 | EN-GJL-250 |
| 8 | 1 | Stck | Handrad | MT154.10.01.007 | EN-GJL-250 |
| 9 | 1 | Stck | Scheibe | MT154.10.01.008 | X5CrNiB-10 |
| 10 | 1 | Stck | Flachdichtung | 56x46x1 | Graphit, CrNi |
| 11 | 2 | Stck | Packungsring | RD14/24x10 | Graphit |
| 12 | 1 | Stck | Scheibe | ISO 7090-B8-A | |
| 13 | 2 | Stck | Hammerschraube | DIN 186-BM8x40-4.6 | |
| 14 | 4 | Stck | Sechskantschraube | DIN EN ISO 4017-M10x30-8.8 | |
| 15 | 1 | Stck | Paßscheibe | DIN 988-22x32x1 | |
| 16 | 1 | Stck | Sechskantmutter | DIN EN ISO 4032-M8-8 | |
| 17 | 1 | Stck | Sitzring | MT154.10.02.002 | X20Cr13 |

Pre-planned exercises and answers directly help to teach students to work systematically and help to monitor student achievement.

In addition to the practical exercises, the materials focus on the reading, understanding and application of technical drawings and parts lists.

The basics are shown comprehensively and professionally in the instructional material.

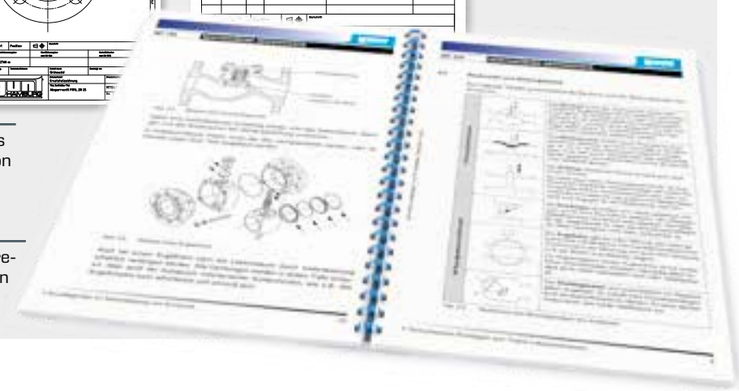

Plan assembly steps and procedures

Complete assembly of individual machine elements through to the functional fitting

Familiarisation with machine elements and standard parts

# MT 154
## Assembly exercise: shut-off valve

### Learning objectives/experiments

- design and function of a shut-off valve
- assembly and disassembly, including for the purposes of maintenance and repair
- reading and understanding engineering drawings
- planning and presentation of the assembly process
- familiarisation with various machine elements: thread mechanism, seals, packing gland
- material selection criteria

- together with the valves and fittings test stand MT 162
  - ▸ leak testing of the assembled valve

### Description

- **practical exercise based on the assembly of a shut-off valve**
- **broad scope of learning with interdisciplinary problems**
- **part of the GUNT-Practice Line for assembly, maintenance and repair**

Shut-off valves of the type included in the MT 154 unit are used to shut-off and restrict the flow of media. They must be capable of total flow shut-off. The closing of the valve should be such that the volumetric flow does not suddenly drop to zero so as to prevent shock loads. The valve taper is moved by the spindle and ensures a metallic seal against the seating ring pressed into the housing. The spindle is sealed by a packing gland. The joint between the housing and the clamp cover is sealed by a flat seal.

The MT 154 project unit presents an introduction exercise to the area of assembly techniques. The assembly and disassembly processes can easily be completed within standard lesson times. Basic tools, all supplied with the kit, are required for assembly.

The unit is of most benefit in teaching if small groups of two to three students work independently. The group has a defined task to perform, with clear assignments to complete.

The comprehensive instructional material is oriented to practical needs. It includes a complete set of drawings with a general arrangement drawing, parts list and individual part drawings.

Together with the valves and fittings test stand MT 162, the assembled valve can be subjected to a pressure test.



MT 154
Assembly exercise: shut-off valve

The illustration shows the shut-off valve fully assembled.

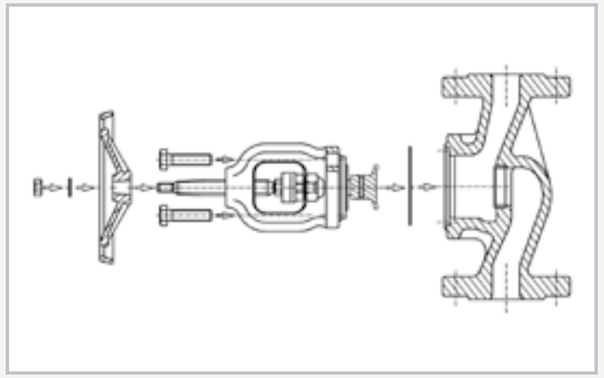

Shut-off valve assembly drawing

### Specification

[1] assembly exercise for engineering training
[2] shut-off valve PN16 as parts set, with associated set of small parts, in a sturdy case
[3] shut-off valve consisting of housing, hand wheel, clamp cover, packing gland frame, taper and spindle
[4] spindle sealing based on the gland principle
[5] part of the GUNT-Practice Line for assembly, maintenance and repair

### Technical data

Shut-off valve with flange connections:
- DN25
- PN16
- stroke: 13mm
- housing, hand wheel, clamp cover, packing gland frame: grey cast iron
- taper, seating ring, spindle, ring segment etc.: stainless steel

LxWxH: 600x450x180mm (case)
Weight: approx. 16kg

### Scope of delivery

1 kit
1 set of tools
1 set of small parts
1 case
1 set of instructional material, consisting of: technical description of system, complete set of drawings with individual parts and parts list, description of assembly and disassembly sequences, also in relation to repair operations

# MT 157
## Assembly exercise: butterfly valve and non-return valve

The illustration shows the tool box with kits and tools. In the foreground the valves and fittings as they are assembled from the kits.

### Description

- **practical exercise based on the assembly of a butterfly valve and a non-return valve**
- **part of the GUNT-Practice Line for assembly, maintenance and repair**

Non-return valves are used where flow reversal is not permitted. They must fully seal off the reverse direction while offering the lowest possible resistance in the forward flow direction. If the differential pressure of the medium falls below the value as dictated by the spring force, the valve closes. Non-return valves are installed in pipelines, and must close if the pressure drops or if a high back-pressure occurs. They are largely maintenance-free and low-wearing.

Butterfly valves are installed in the pipelines of water supply pumping stations and filter systems; in power plant cooling circuits; in the chemical industry for process water, including acidic and alkaline media; and in sewage treatment plants. They seal drip-tight like gate valves, and take up little space, as they are usually similar in size to the pipe cross-section.

Butterfly valves are constructed for ultra-large nominal widths (DN5300). Their operating pressure is normally in the range 4...16bar. Butterfly valves may be operated by hand, by electric motor via a spur gear segment or worm gear, or by a hydraulic piston. The valve is closed by rotating its shaft through 90°.

The MT 157 practice kit forms part of the GUNT-Practice Line for assembly, maintenance and repair designed for training at technical colleges and in company training centres. A close link between theory and practice is key to the learning content.

MT 157 enables two typical industrially relevant valves and fittings to be assembled and disassembled. Students become familiar with all the components and their modes of operation. The parts are clearly laid out and well protected in a tool box. Systematic assembly and disassembly of the valves and fittings is practiced. The accompanying material details the individual steps involved in assembly, and provides additional information on the areas of application, mode of operation and design of the valves and fittings.

### Learning objectives/experiments

- design and function of a butterfly valve
- design and function of an a non-return valve
- assembly and disassembly, including for the purposes of maintenance and repair
- replacing components (e.g. seal)
- comparison of 2 different valves and fittings
- reading and understanding engineering drawings and operating instructions

- together with the valves and fittings test stand MT 162
  - ▸ leak testing of the assembled valve



MT 157
Assembly exercise: butterfly valve and non-return valve

Non-return valve, disassembled

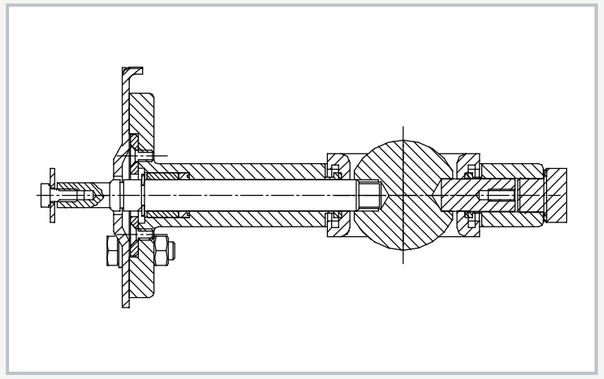

Sectional drawing of the butterfly valve

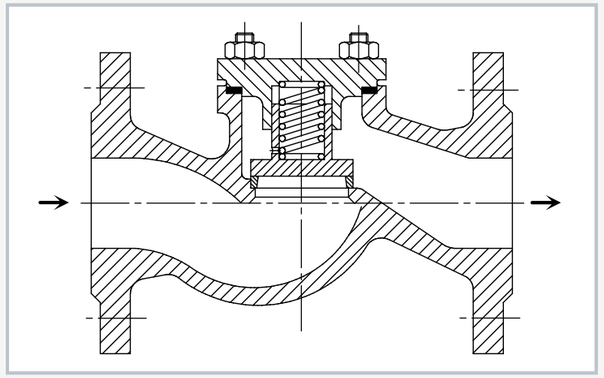

Sectional drawing of the non-return valve

### Specification

[1] learning concept for assembly exercises on valves and fittings
[2] butterfly valve with manual adjuster, as set of parts
[3] typical non-return valve, as set of parts
[4] complete assembly tool kit
[5] valve parts and tools housed in a sheet-steel tool box
[6] part of the GUNT-Practice Line for assembly, maintenance and repair

### Technical data

Butterfly valve with flange connections
- DN40, PN16
- materials: housing: grey cast iron; disk, shafts: stainless steel; sleeve: rubber; hand lever: aluminium; bush: bronze

Non-return valve with flange connections:
- DN25, PN16
- materials: housing: grey cast iron; taper, spring: stainless steel; flat seal: graphite

LxWxH: 720x360x310mm (tool box)
Weight: approx. 35kg

### Scope of delivery

1 kit (butterfly valve)
1 kit (non-return valve)
1 set of tools
1 set of small parts
1 tool box with foam inlay
1 set of instructional material, consisting of: technical description of system, complete set of drawings with individual parts and parts list, description of assembly and disassembly sequences, also in relation to repair operations

# MT 156
## Assembly exercise: wedge gate valve and angle seat valve

The illustration shows the tool box with kits and tools. In the foreground the valves and fittings as they are assembled from the kits.

### Description

- **practical exercise based on the assembly of a wedge gate valve and an angle seat valve**
- **comprehensive and well-structured instructional material**

Wedge gate valves are used as fittings for water, water vapour, oil and other non-aggressive liquids. Operating temperatures of up to 200°C are possible. Wedge gate valves in this design are operated by a hand-wheel turned spindle. During closing, the slider is pushed by the spindle nut into the sealing rings in the housing.

Angle seat valves are the typical fittings used in drinking water pipes. Angle seat valves are also used in many areas of industry. They are designed for neutral fluids and gaseous media. Stainless steel versions are suitable for mildly and highly aggressive media. The valves can be used for high flow rates, and are non-sensitive to lightly contaminated and high-viscosity media. The valve spindle is usually arranged at a 45° angle to the direction of flow. Angle seat valves generate substantially lower pressure loss than screw down valves or corner valves owing to the less tortuous flow path of the fluid.

The MT 156 practice kit forms part of the GUNT-Practice Line for assembly, maintenance and repair designed for training at technical colleges and in company training centres. A close link between theory and practice is key to the learning content.

MT 156 enables two typical industrially relevant valves and fittings to be assembled and disassembled. Students become familiar with all the components and their modes of operation. The parts are clearly laid out and well protected in a tool box. Systematic assembly and disassembly of the valves is practiced. The accompanying material details the individual steps involved in assembly, and provides additional information on the areas of application, mode of operation and design of the valves and fittings.

### Learning objectives/experiments

- design and function of a wedge gate valve
- design and function of an angle seat valve
- assembly and disassembly, including for the purposes of maintenance and repair
- replacing components (e.g. seal)
- comparison of 2 different valves and fittings
- reading and understanding engineering drawings and operating instructions

- together with the valves and fittings test stand MT 162
  - ▸ leak testing of the assembled valve



MT 156
Assembly exercise: wedge gate valve and angle seat valve

Assembly of the slider

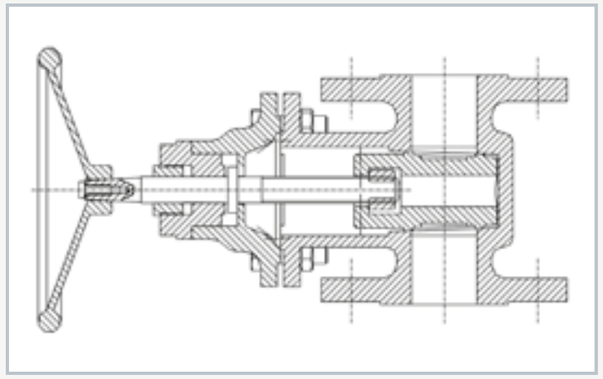

Sectional drawing of the wedge gate valve

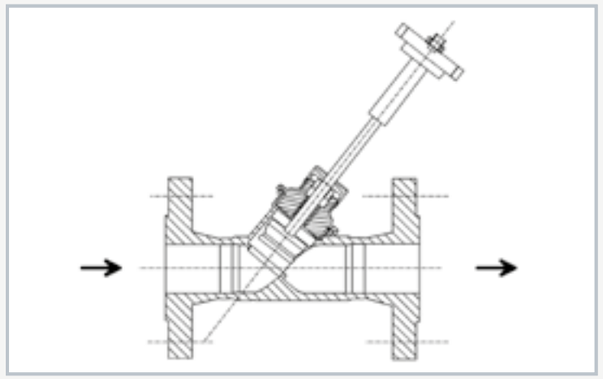

Sectional drawing of the angle seat valve

### Specification

[1] learning concept for assembly exercises on valves and fittings
[2] wedge gate valve with hand wheel, as set of parts
[3] angle seat valve with manual drive, as set of parts
[4] complete assembly tool kit
[5] valve parts and tools housed in a sheet-steel tool box
[6] part of the GUNT-Practice Line for assembly, maintenance and repair

### Technical data

Wedge gate valve with flange connections
- DN40, PN10
- materials: housing, cover, taper: grey cast iron; spindle, sealing surfaces of housing and taper: stainless steel; packing rings: graphite

Angle seat valve with flange connections
- DN25, PN16
- materials: housing: stainless steel; metallic inner parts: stainless steel; seals: PTFE

LxWxH: 720x360x310mm (tool box)
Weight: approx. 35kg

### Scope of delivery

1 kit (wedge gate valve)
1 kit (angle seat valve)
1 set of tools
1 set of small parts
1 tool box with foam inlay
1 set of instructional material, consisting of: technical description of system, complete set of drawings with individual parts and parts list, description of assembly and disassembly sequences, also in relation to repair operations

# MT 158
## Assembly exercise: ball valve and shut-off valve

The illustration shows the tool box with kits and tools. In the foreground the valves and fittings as they are assembled from the kits.

### Description

- **practical exercise based on the assembly of a ball valve and a shut-off valve**
- **part of the GUNT-Practice Line for assembly, maintenance and repair**

Shut-off valves, of the design presented here, are used to shut off and restrict the flow of media. They must be capable of complete flow shut-off. Closure of the valve should be such that the volumetric flow does not suddenly drop to zero in order to prevent shock loads. The valve taper is moved by the spindle and makes a metallic seal against the seating ring pressed into the housing. The spindle is sealed by a packing gland. The joint between the housing and the clamp cover is sealed by a flat seal.

Ball valves are used where media flows or pressures in pipelines need to be stopped quickly and easily, e.g. when valves and fittings are to be removed from a pressurised pipeline. They have a very low flow resistance when open, require little space due to the compact design, and have a self-cleaning sealing face. The sealing body is a ball with a cylindrical bore allowing full flow when the valve is fully open. The ball is rotated through 90° by way of a lever with spindle, enabling it to open or close the valve fully.

The MT 158 practice kit forms part of the GUNT-Practice Line for assembly, maintenance and repair designed for training at technical colleges and in company training centres. A close link between theory and practice is key to the learning content.

MT 158 enables two typical shut-off valves to be assembled and disassembled. Students become familiar with all the components and their modes of operation. The parts are clearly laid out and well protected in a tool box. Systematic assembly and disassembly of valves and fittings is practiced. The accompanying material details the individual steps involved, and provides additional information on the areas of application, mode of operation and design of the fittings.

### Learning objectives/experiments

- design and function of a ball valve
- design and function of a shut-off valve
- assembly and disassembly, including for the purposes of maintenance and repair
- replacing components (e.g. seal)
- comparison of 2 different valves and fittings
- reading and understanding engineering drawings and operating instructions

- together with the valves and fittings test stand MT 162
  - ▸ leak testing of the assembled valve



# MT 158
## Assembly exercise: ball valve and shut-off valve

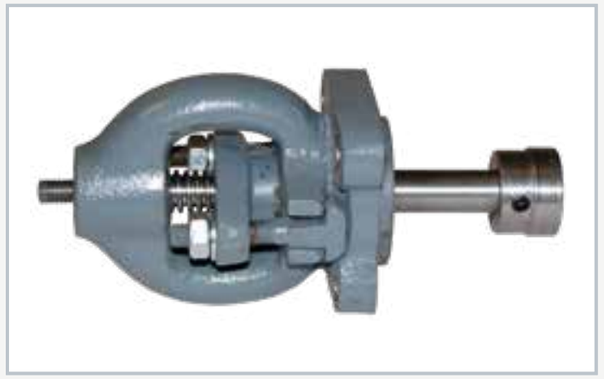

Assembly unit 2 of the shut-off valve, assembled

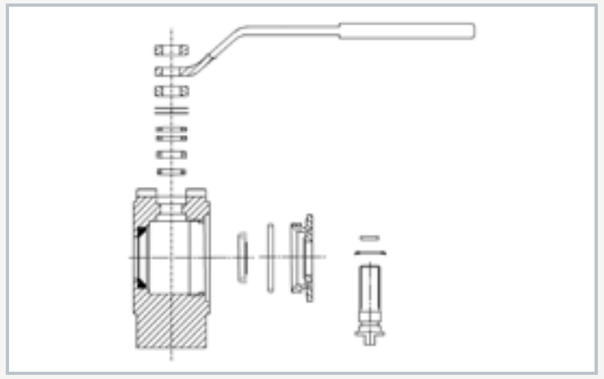

Assembly drawing of the ball valve

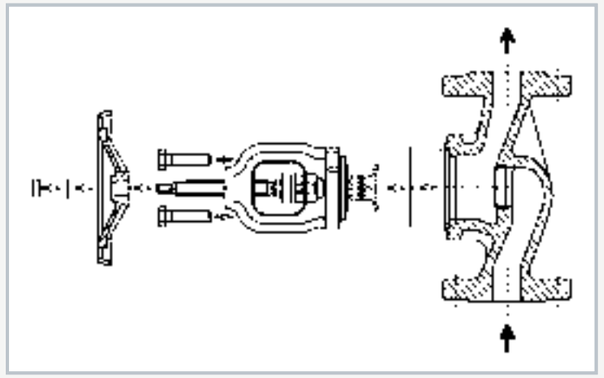

Assembly drawing of the shut-off valve

### Specification

[1] learning concept for assembly exercises on valves and fittings
[2] shut-off valve, as kit
[3] 2-way ball valve, as kit
[4] complete assembly tool kit
[5] valve parts and tools housed in a sheet-steel tool box
[6] part of the GUNT-Practice Line for assembly, maintenance and repair

### Technical data

Shut-off valve with flange connections
- DN25, PN16
- housing, hand wheel, clamp cover, packing gland frame: grey cast iron
- taper, seating ring, spindle, ring segment etc.: stainless steel

Ball valve with flange connections
- DN25, PN16
- housing: C22
- ball: brass
- spindle, lever, disks etc.: galvanized steel

LxWxH: 720x360x310mm (tool box)
Weight: approx. 35kg

### Scope of delivery

1 kit (shut-off valve)
1 kit (ball valve)
1 set of tools
1 set of small parts
1 tool box with foam inlay
1 set of instructional material, consisting of: technical description of system, complete set of drawings with individual parts and parts list, description of assembly and disassembly sequences, also in relation to repair operations

# MT 162
## Hydraulic valves and fittings test stand

The illustration shows MT 162 together with the gate valve from MT 156.

### Learning objectives/experiments

- the following experiments can be conducted together with valves and fittings, such as a wedge gate valve or angle seat valve (MT 156), butterfly valve or non-return valve (MT 157), ball valve or shut-off valve (MT 158)
  - correct connection of valves to a flange coupling
  - familiarisation with the terms "nominal pressure" and "test pressure"
  - performing the final test for the GUNT MT 154, MT 156, MT 157 and MT 158 assembly kits
  - checking the free movement of the valves and fittings
  - pressure testing: leak testing of housing and flange seals
  - pressure testing: leak testing of the valve seat
  - drafting a test report

### Description

- **mobile test stand for pressure testing of valves and fittings**
- **final testing for the GUNT MT 154, MT 156, MT 157 and MT 158 assembly kits**

MT 162 is used for pressure testing of various types of valves and fittings. The unit can be used to test if the valve opens and closes easily under pressure, and if the housing and seals can withstand the test pressure. A manually operated piston pump draws water from the storage tank, fills the valve interior, and generates the test pressure. A manometer indicates the test pressure. The welded-in collector tray is fitted with a ball valve to allow it to be drained.

The valve under test is attached to a mounting flange and sealed by a blank flange. The piston pump and mounting flange are interconnected via a pressure hose. The test stand includes its own storage tank so it can be operated independently of a water pipe supply. The tank must be topped up occasionally.

The test stand is used in particular for the final testing of the valves assembled and disassembled in the GUNT MT 154, MT 156, MT 157 and MT 158 assembly kits series. This ensures that a successfully completed assembly kit can be examined for operability with a formal test procedure.



# MT 162
## Hydraulic valves and fittings test stand

1 manometer, 2 mounting flanges with blank flange, 3 benchtop tray with drain, 4 pressure test pump with water tank, 5 hand lever, 6 hose

| A | B |
|---|---|
| 4 bar | 5.2 bar |
| 6 bar | 7.8 bar |
| 10 bar | 13.0 bar |
| 16 bar | 20.8 bar |
| 40 bar | 52.0 bar |

Column A: nominal pressure, column B: test pressure

### Specification

[1] test stand on which to mount industrial valves and fittings
[2] pressure testing of valves and fittings
[3] hand-operated piston pump to generate the test pressure, a return valve to relieve the system pressure, and a manometer for pressure measurement
[4] 2 different sizes of mounting flange with blank flange and flange seal
[5] connection of pump and test flange via pressure hose
[6] test medium: water
[7] mobile frame with collector tray and ball valve to drain
[8] water storage tank
[9] part of the GUNT-Practice Line for assembly, maintenance and repair

### Technical data

Piston pump with tank
- test pressure: 0...60bar
- tank capacity: 12L
- manometer: 0...60bar

Mounting flanges for valves and fittings under test
- DN25
- DN40

LxWxH: 1000x750x1200mm
Weight: approx. 80kg

### Scope of delivery

1 test stand
1 set of accessories
1 set of tools
1 manual

# Assembly & maintenance exercises pumps

## What is maintenance?

**Maintenance is a complex field, and in Germany is defined by the DIN 31051 standard. Maintenance is one of the main tasks for technicians and skilled workers in mechanical engineering or mechatronics. The attention that curricula give to the topic is correspondingly large.**

With GUNT's assembly and maintenance exercises for pumps, students are given the opportunity to gain insight into the function and structure of various pumps.

Moving parts are installed in all pumps, which means these must be serviced regularly and wear parts replaced. Maintenance is intended to ensure that the functional state of a component is maintained or restored and includes the fields of maintenance, inspection and repair. Extensive knowledge of installation technology is essential for the topic of maintenance.

**Maintenance according to DIN 31051**

| Maintenance | Inspection | Repair | Improvement/ overhaul |
|---|---|---|---|
| Preservation of the target state | Detection and assessment of the actual state | Restore the target state | Elimination of weak points |
| Cleaning, lubricating, adjusting | Measuring, testing, diagnosing | Replacing or refitting | Combination of all steps to rise security of function in a unit without changing the basic functions themselves |
| Only according to maintenance instructions during plant downtime | On operational plant and during plant downtime in accordance with inspection requirements | Only during plant downtime in accordance with job order and careful preparation | Permanent improvement independent of operating status |

If the function of a pump is disturbed, there is the danger of production or supply failures. Replacing a pump is often considerably less economical than proper preventive maintenance.

The versatile assembly and maintenance exercises provide real-world industrial experience. In particular, the maintenance exercises are sometimes time-consuming and are suitable for project work. The exercises require that students have a technical and systematic approach to work.

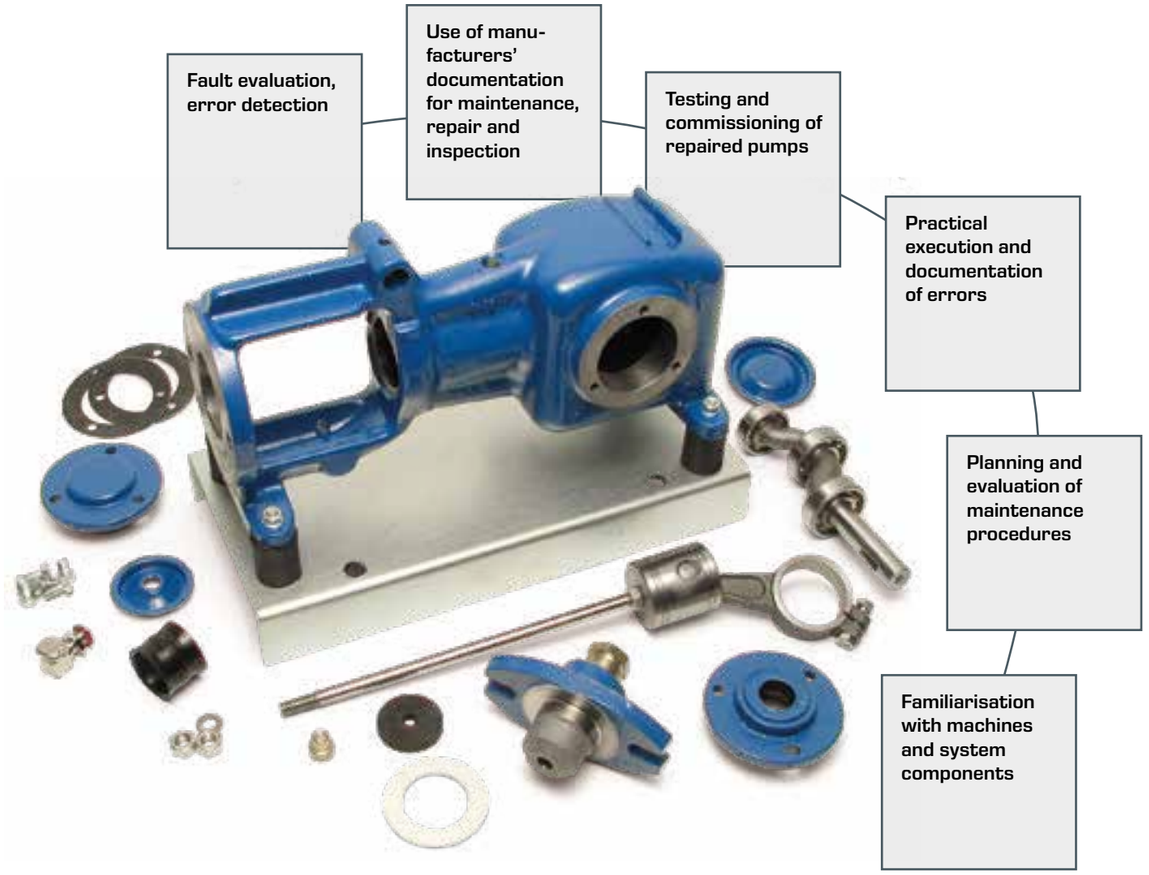

Professional presentation of the technical fundamentals

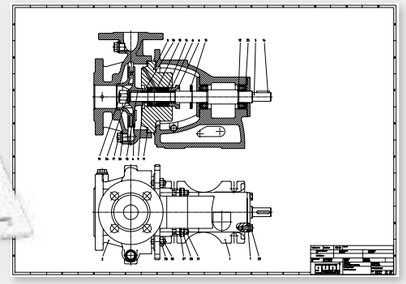

Exercises allow systematic work and performance assessments

Standards-compliant set of drawings with parts list and assembly instructions

# MT 180
## Assembly & maintenance exercise: centrifugal pump

The illustration shows the tool box with kit and tool inlay, and in the foreground the fully assembled pump.

### Description

- **practical exercise on the assembly and maintenance of a standard centrifugal pump**
- **part of the GUNT-Practice Line for assembly, maintenance and repair**

Centrifugal pumps are rotodynamic pumps and operate normally primed. They are in widespread use, and are deployed primarily in the pumping of water. Their applications include use in shipbuilding, the process industries and in water supply systems. They are compact and relatively simple in design. The water is conveyed by centrifugal force generated by the rotation of the pump impeller. Standard pumps are – as the term suggests – standard items. As a result they are relatively inexpensive to purchase and maintain. In the lifecycle of a pump, maintenance and repair work is usually required as in many cases pumps are not considered as pure replacement items.

The MT 180 kit forms part of the GUNT-Practice Line for assembly, maintenance and repair designed for training at technical colleges and in company training centres. A close link between theory and practice is key to the learning content.

The kit is ideally suited to project based learning with a particular emphasis on 'hands-on' work. Independent working by the students is assisted and encouraged. Learning in a small team offers a useful learning format.

MT 180 enables a typical standard centrifugal pump to be assembled and maintained. Students become familiar with all the pump components and their modes of operation. The parts are clearly laid out in a tool box. Systematic assembly and disassembly of a pump is practiced.

The instructional material details the individual steps involved in the exercise, and provides additional information on the areas of application, mode of operation and design of the pump.

### Learning objectives/experiments

- design and function of a centrifugal pump and its components
- assembly and disassembly for maintenance and repair purposes
- replacing components (e.g. seals or bearings)
- troubleshooting, fault assessment
- planning and assessment of maintenance and repair operations
- reading and understanding engineering drawings and operating instructions



MT 180
Assembly & maintenance exercise: centrifugal pump

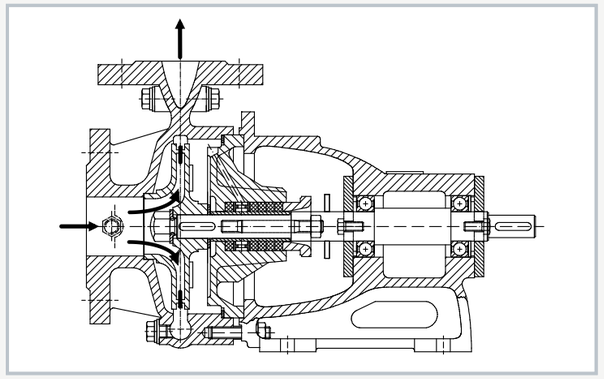

Sectional drawing of the centrifugal pump

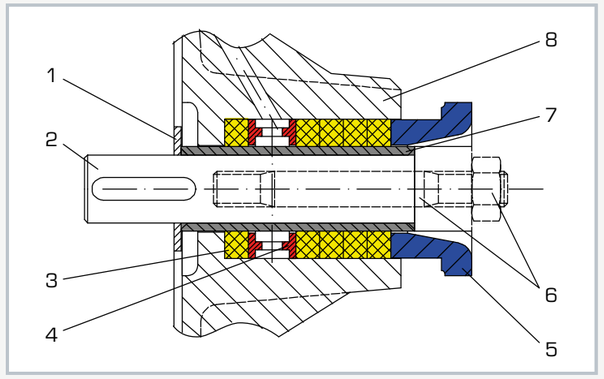


Packing gland: 1 disk, 2 shaft, 3 gland packing, 4 locking ring, 5 packing gland frame, 6 stud bolt with hexagon nut, 7 shaft sheath, 8 housing cover

Assembly of the centrifugal pump: fixing of the bearing cover with screws

### Specification

[1] learning concept for maintenance and repair exercises on a single-stage, normally primed centrifugal pump with a spiral housing
[2] pump according to DIN 24255
[3] enclosed pump impeller with 5 blades, designed for pure liquids
[4] pump shaft sealing, based on the gland principle
[5] 2 assembly jigs and a complete tool set
[6] pump parts and tools housed in a tool box
[7] part of the GUNT-Practice Line for assembly, maintenance and repair

### Technical data

Single-stage centrifugal pump
- power consumption: max. 1100W
- max. flow rate: $19m^3/h$
- max. head: 25m
- speed: $3000min^{-1}$
- intake connection: DN50
- delivery connection: DN32
- housing and impeller: grey cast iron

LxWxH: 690x360x312mm (tool box)
Weight: approx. 35kg

### Scope of delivery

1 kit
1 set of tools
1 set of assembly jigs
1 set of small parts
1 set of gaskets
1 tool box with foam inlay
1 set of instructional material, consisting of: technical description of system, complete set of drawings with individual parts and parts list, description of maintenance and repair processes, suggested exercises; manufacturer's manual

# MT 181
## Assembly & maintenance exercise: multistage centrifugal pump

The illustration shows the tool box with kit and tools. The fully assembled pump is shown in the foreground.

### Description

- **practical exercise on the assembly and maintenance of a multistage centrifugal pump**
- **part of the GUNT-Practice Line for assembly, maintenance and repair**

Centrifugal pumps are rotodynamic pumps and operate normally primed.They are in widespread use, and are deployed primarily in the pumping of water. Their range of applications include use in shipbuilding, the process industries and in water supply systems. Very high delivery pressures can be generated by connecting multiple impellers in series. Centrifugal pumps are compact and relatively simple in design. The water is conveyed by centrifugal force generated by the rotation of the pump impeller. In the lifecycle of a pump, maintenance and repair work is usually required as in many cases pumps are not considered as pure replacement items.

The MT 181 kit forms part of the GUNT-Practice Line for assembly, maintenance and repair designed for training at technical colleges and in company training centres. A close link between theory and practice is key to the learning content.

The kit is ideally suited to project-based learning with a particular emphasis on 'hands-on' work. Independent working by the students is assisted and encouraged. Learning in a small team offers a useful learning format.

MT 181 enables a typical multistage centrifugal pump to be assembled and maintained. Students become familiar with all the pump components and their modes of operation. The parts are clearly laid out in a tool box. Systematic assembly and disassembly of a pump is practiced.

The instructional material details the individual steps involved in the exercise, and provides additional information on the areas of application, mode of operation and design of the pump.

### Learning objectives/experiments

- design and function of a multistage pump and its components
- assembly and disassembly for maintenance and repair purposes
- replacing components (e.g. seals, bearings or impellers)
- troubleshooting, fault assessment
- planning and assessment of maintenance and repair operations
- reading and understanding engineering drawings and operating instructions



MT 181
Assembly & maintenance exercise: multistage centrifugal pump

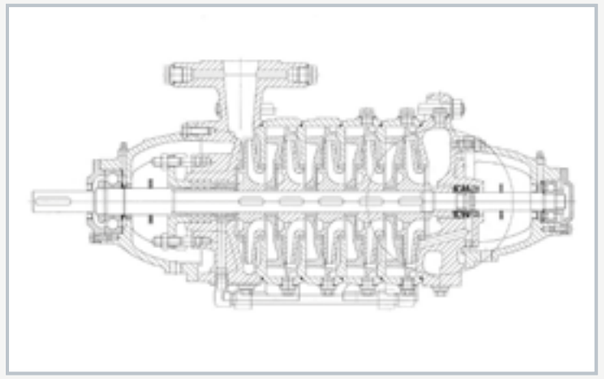

Sectional drawing of a similar multistage centrifugal pump (MT 181 has four stages; the intake and delivery connections are on the same side)

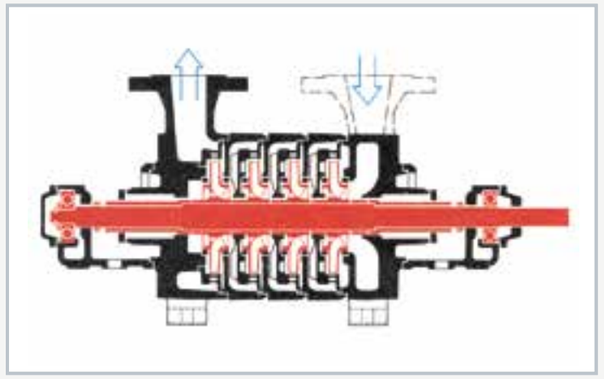

Schematic view of a four-stage centrifugal pump

Assembly of the four-stage centrifugal pump: assembling the packing gland rings

### Specification

[1] learning concept for maintenance and repair exercises on a four-stage, normally primed centrifugal pump
[2] shaft sealing based on the gland principle (delivery side) and with floating ring seal (intake side)
[3] driven by motor (not included) and clutch via pump shaft
[4] 4 assembly jigs and complete tool set
[5] pump parts and tools housed in a tool box
[6] part of the GUNT-Practice Line for assembly, maintenance and repair

### Technical data

Four-stage centrifugal pump
- power consumption: max. 1400W
- max. flow rate: $18m^3/h$
- max. head: 28m
- speed: $1450min^{-1}$
- intake connection: DN50
- delivery connection: DN40
- housing and impellers: grey cast iron

LxWxH: 690x360x312mm (tool box)
Weight: approx. 58kg

### Scope of delivery

1 kit
1 set of tools
1 set of assembly jigs
1 set of small parts
1 set of gaskets
1 tool box with foam inlay
1 set of instructional material, consisting of: technical description of system, complete set of drawings with individual parts and parts list, description of maintenance and repair processes, suggested exercises; manufacturer's manual

# MT 185
## Assembly & maintenance exercise: in-line centrifugal pump

The illustration shows the tool box with kit and tools. The fully assembled pump is shown in the foreground. The illustration shows a similar unit.

### Description

- **practical exercise on the assembly and maintenance of an in-line centrifugal pump**
- **part of the GUNT-Practice Line for assembly, maintenance and repair**

In-line centrifugal pumps are rotodynamic pumps and operate normally primed. In-line pumps are installed in the straight runs of pipelines. The difference between an in-line pump and a standard pump is that the intake and delivery connections of an in-line pump are aligned on a single axis.

The in-line centrifugal pump presented here is used to pump mechanically and chemically non-aggressive liquids. Its range of applications include use in water supply, irrigation and sprinkler systems, and heating engineering systems.

The MT 185 kit forms part of the GUNT-Practice Line for assembly, maintenance and repair designed for training at technical colleges and in company training centres.

A close link between theory and practice is key to the learning content. The kit is ideally suited to project-based learning with a particular emphasis on 'hands-on' work. Independent working by the students is assisted and encouraged. Performing exercises in a small team offers a useful learning format.

MT 185 enables a typical in-line centrifugal pump to be assembled and maintained. Students become familiar with all the pump components and their modes of operation. The parts are clearly laid out in a tool box. Systematic assembly and disassembly of a pump is practiced.

The instruction material details the individual steps involved in the exercise, and provides additional information on the areas of application, mode of operation and design of the pump.

### Learning objectives/experiments

- design and function of an in-line centrifugal pump and its components
- assembly and disassembly for maintenance and repair purposes
- replacing components (e.g. seals)
- troubleshooting, fault assessment
- planning and assessment of maintenance and repair operations
- reading and understanding engineering drawings and operating instructions



# MT 185
## Assembly & maintenance exercise: in-line centrifugal pump

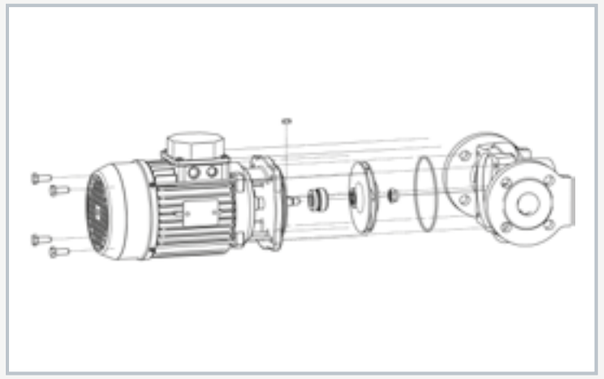

Exploded-view drawing of the in-line centrifugal pump

In-line centrifugal pump: intake and delivery connections on the same axis

Individual parts of the in-line centrifugal pump

### Specification

[1] learning concept for maintenance and repair exercises on an in-line centrifugal pump
[2] enclosed pump impeller with 6 blades, designed for pure liquids
[3] pump shaft sealing with floating ring seal
[4] pump drive by 3-phase AC motor
[5] pump parts and tools housed in a tool box
[6] part of the GUNT-Practice Line for assembly, maintenance and repair

### Technical data

In-line centrifugal pump
- power consumption: max. 370W
- max. flow rate: $13m^3/h$
- max. head: 11m
- speed: $2830min^{-1}$
- intake connection: DN32
- delivery connection: DN32
- housing: grey cast iron
- impeller: GRP

Drive motor
- 400V, 50Hz, 3 phases; or 230V, 60Hz, 3 phases

LxWxH: 690x360x312mm (tool box)
Weight: approx. 28kg

### Scope of delivery

1 kit
1 set of tools
1 set of small parts
1 set of gaskets
1 tool box with foam inlay
1 set of instructional material, consisting of: technical description of system, complete set of drawings with individual parts and parts list, description of maintenance and repair processes, suggested exercises; manufacturer's manual

# MT 184
## Assembly & maintenance exercise: piston pump

The illustration shows the tool box with kit and tools. The fully assembled pump is shown in the foreground.

### Description

- **practical exercise based on the assembly and maintenance of a piston pump**
- **part of the GUNT-Practice Line for assembly, maintenance and repair**

Piston pumps are positive displacement pumps and operate in an oscillatory manner, normally primed. At constant speed, their characteristic is an almost vertical straight line; at different pressures the volumetric flow remains approximately constant.

The pump presented here is a dual-action piston pump. This means that each piston stroke is both an intake and delivery stroke. Typical applications of the pump dealt with here are the pumping of drinking and service water for domestic use, in agriculture, shipping, industry and gardening centres.

The MT 184 kit forms part of the GUNT-Practice Line for assembly, maintenance and repair designed for training at technical colleges and in company training centres. A close link between theory and practice is key to the learning content. The kit is ideally suited to project-based learning with a particular emphasis on 'hands-on' work. Independent working by the students is assisted and encouraged. Performing in a small team offers a useful learning format.

MT 184 enables a typical piston pump to be assembled and maintained. Students become familiar with all the pump components and their modes of operation. The parts are clearly laid out in a tool box. Systematic assembly and disassembly of a pump is practiced. The instructional material details the individual steps involved in the exercise, and provides additional information on the areas of application, mode of operation and design of the pump.

### Learning objectives/experiments

- design and function of a piston pump and its components
- assembly and disassembly for maintenance and repair purposes
- replacing components (e.g. seals or bearings)
- troubleshooting, fault assessment
- planning and assessment of maintenance and repair operations
- reading and understanding engineering drawings and operating instructions



MT 184
Assembly & maintenance exercise: piston pump

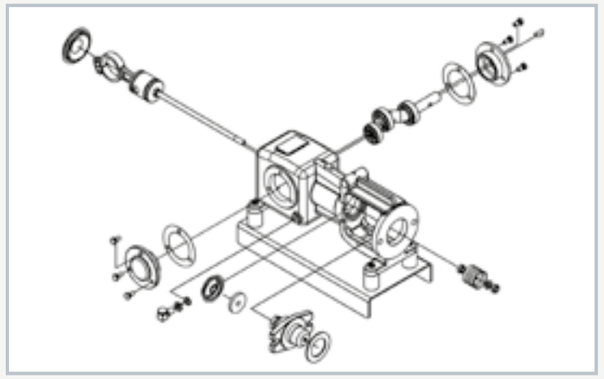

Exploded-view drawing of the piston pump

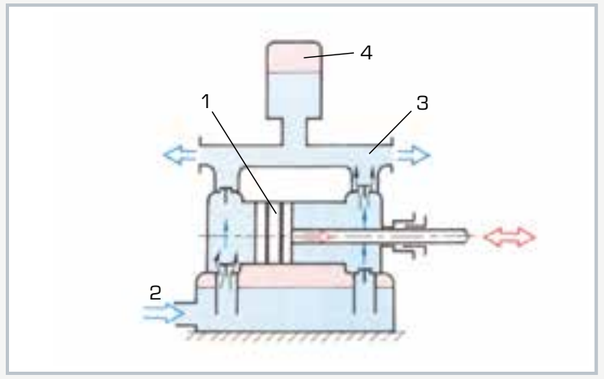


Principle of a double-acting piston pump: 1 piston, 2 inlet, 3 outlet, 4 air vessel

Dissassembly of the piston pump: pulling off the ball bearing of the eccentric shaft (using a bearing puller)

### Specification

[1] learning concept for maintenance and repair exercises on a double-acting piston pump
[2] air vessel to compensate for pressure surges
[3] integrated safety valve returns a portion of the flow back to the intake side in event of overpressure
[4] piston rod seal based on the gland principle
[5] pump drive via V-belt pulley
[6] pump parts and tools housed in a tool box
[7] part of the GUNT-Practice Line for assembly, maintenance and repair

### Technical data

Piston pump
- max. flow rate: 1000L/h
- max. head: 60m
- max. power consumption: 370W
- drive via V-belt, motor speed: 1450min$^{-1}$
- intake connection: 1"
- delivery connection: 1"

LxWxH: 690x360x312mm (tool box)
Weight: approx. 33kg

### Scope of delivery

1 kit
1 set of tools
1 set of small parts
1 set of gaskets
1 tool box with foam inlay
1 set of instructional material, consisting of: technical description of system, complete set of drawings with individual parts and parts list, description of maintenance and repair processes, suggested exercises; manufacturer's manual

# MT 183
## Assembly & maintenance exercise: diaphragm pump

The illustration shows the tool box with kit and tools. The fully assembled pump is shown in the foreground.

### Description

- **practical exercise on the assembly and maintenance of a diaphragm pump**
- **part of the GUNT-Practice Line for assembly, maintenance and repair**

Diaphragm pumps are positive displacement pumps and operate in an oscillatory manner, normally primed. Since diaphragm pumps operate absolutely leakage-free, they are particularly suitable – provided the appropriate pump materials are used – for handling aggressive fluids such as acids and caustic solutions as well as radioactive, combustible, odorous and toxic liquids. Another advantage is that they can run dry. Diaphragm pumps are often used for volumetric metering (metering pumps).

The materials used in the construction of the diaphragm pump employed here make it particularly suitable for use in chemical engineering. It is equipped with a stroke length adjuster, and is deployed as a metering pump.

The MT 183 kit forms part of the GUNT-Practice Line for assembly, maintenance and repair designed for training at technical colleges and in company training centres. A close link between theory and practice is key to the learning content. The kit is ideally suited to project-based learning with a particular emphasis on 'hands-on' work. Independent working by the students is assisted and encouraged. Learning in a small team offers a useful learning format.

MT 183 enables a typical diaphragm pump to be assembled and maintained. Students become familiar with all the pump components and their modes of operation. The parts are clearly laid out in a toolbox. Systematic assembly and disassembly of a pump is practiced.

The instructional material details the individual steps involved in the exercise, and provides additional information on the areas of application, mode of operation and design of the pump.

### Learning objectives/experiments

- design and function of a diaphragm pump and its components
- assembly and disassembly for maintenance and repair purposes
- replacing components (e.g. seals or bearings)
- troubleshooting, fault assessment
- planning and assessment of maintenance and repair operations
- reading and understanding engineering drawings and operating instructions



# MT 183
## Assembly & maintenance exercise: diaphragm pump

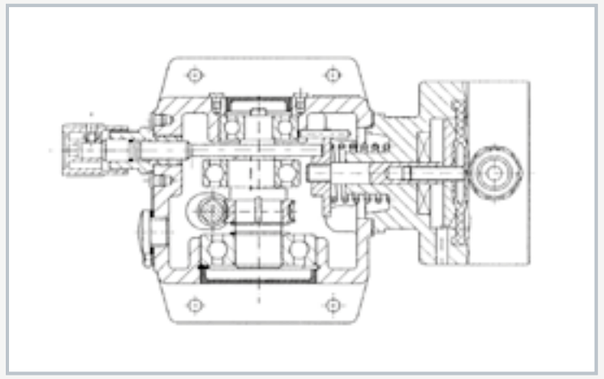

Sectional drawing of the diaphragm pump

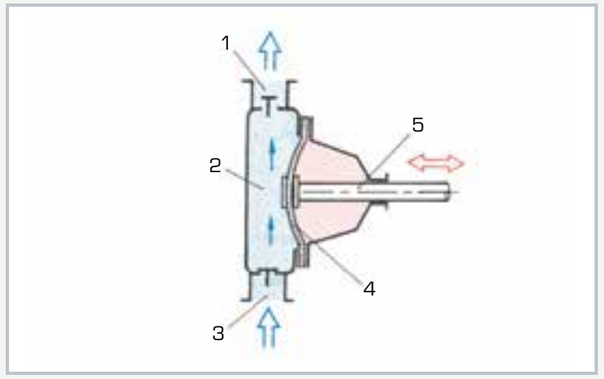


Operating principle of the single diaphragm pump: 1 outlet, 2 pumping chamber, 3 inlet, 4 diaphragm, 5 push rod

Assembly of the diaphragm pump: driving the eccentric into the housing (using a device)

### Specification

[1] learning concept for maintenance and repair exercises on a single-diaphragm pump
[2] diaphragm and push rod directly linked
[3] flow setting by manual stroke length adjustment (including during operation)
[4] manual drive with crank instead of a drive motor
[5] pump parts and tools housed in a tool box
[6] part of the GUNT-Practice Line for assembly, maintenance and repair

### Technical data

Diaphragm pump
- flow rate: 0...2,4L/h
- max. head: 100m
- nominal stroke rate at 50Hz: 156min$^{-1}$
- power consumption: max. 90W
- intake connection: DN5
- delivery connection: DN5
- pump materials
  - pump body: Polypropylene (PP)
  - double-ball valves: PP/glass fibre-reinforced plastic
  - valve balls: glass
  - valve seals: FPM
  - drive diaphragm: PTFE-lined

LxWxH: 690x360x312mm (tool box)
Weight: approx. 15kg

### Scope of delivery

1 kit
1 set of tools
1 set of small parts
1 set of gaskets
1 tool box with foam inlay
1 set of instructional material, consisting of: technical description of system, complete set of drawings with individual parts and parts list, description of maintenance and repair processes, suggested exercises; manufacturer's manual

# MT 186
## Assembly & maintenance exercise: gear pump

The illustration shows the tool box with kit and tools. The fully assembled pump is shown in the foreground.

### Description

- **practical exercise on the assembly and maintenance of a gear pump**
- **part of the GUNT-Practice Line for assembly, maintenance and repair**

Gear pumps are piston-type rotary pumps which operate on the positive-displacement principle. They are simple in design, and easy to handle. Gear pumps can generate operating pressures of up to 40bar and flow rates of up to 60m³/h. Their pulse-free delivery increases linearly with speed. High-viscosity media (oils, paints, adhesives, etc.) can also be pumped. Gear pumps are sensitive to hard solid-matter particles in the flow.

The materials used in the construction of the pump presented here make it resistant to most corrosive and aggressive chemicals. The plastic / metal gear wheel pairing results in relatively quiet running.

The MT 186 kit forms part of the GUNT-Practice Line for assembly, maintenance and repair designed for training at technical colleges and in company training centres.

A close link between theory and practice is key to the learning content. The kit is ideally suited to project-based learning with a particular emphasis on 'hands-on' work. Independent working by the students is assisted and encouraged. Performing exercises in a small team offers a useful learning format.

MT 186 enables a typical gear pump to be assembled and maintained. Students become familiar with all the pump components and their modes of operation. The parts are clearly laid out in a tool box. Systematic assembly and disassembly of a pump is practiced. The instructional material details the individual steps involved in the exercise, and provides additional information on the areas of application, mode of operation and design of the pump.

### Learning objectives/experiments

- design and function of a gear pump and its components
- assembly and disassembly for maintenance and repair purposes
- replacing components (e.g. seals)
- troubleshooting, fault assessment
- planning and assessment of maintenance and repair operations
- reading and understanding engineering drawings and operating instructions



MT 186
Assembly & maintenance exercise: gear pump

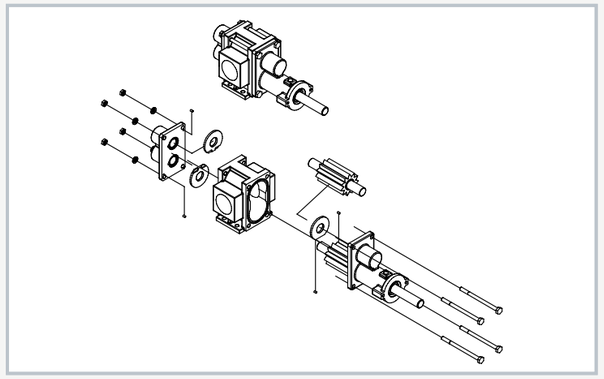

Exploded-view drawing of the gear pump

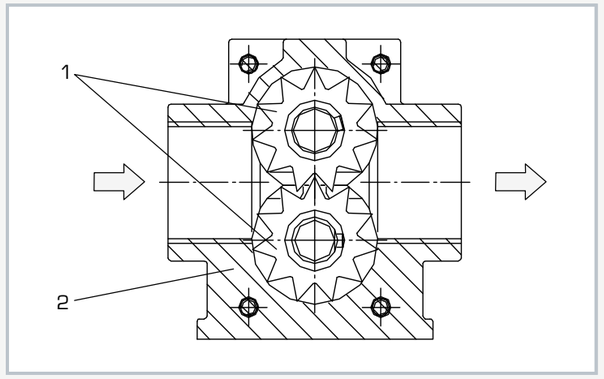


Function of a gear pump: 1 gear pair, 2 housing

Assembly of the centrifugal pump: assembling the driving shaft

### Specification

[1] learning concept for maintenance and repair exercises on a gear pump
[2] relatively quiet running owing to the plastic/metal gear wheel pairing
[3] pump shaft sealing with floating ringseal
[4] suitable for solids-free media with dynamic viscosity up to 0...10000mPas
[5] pump parts and tools housed in a tool box
[6] part of the GUNT-Practice Line for assembly, maintenance and repair

### Technical data

Gear pump
- power consumption: max. 2kW
- max. flow rate: 80L/min
- max. head: 70m
- motor speed: 300...1750min$^{-1}$
- intake connection thread: R 1 1/4"
- delivery connection thread: R 1 1/4"
- pump materials
  - housing: stainless steel 316 (1.4401)
  - gear wheels: stainless steel 316 (1.4401)/PTFE
  - wearing plates: PTFE
  - bearings: PTFE
- speed-dependent viscosities
  - n=300min$^{-1}$: 10000mPas
  - n=1750min$^{-1}$: 3000mPas

LxWxH: 690x360x312mm (tool box)
Weight: approx. 20kg

### Scope of delivery

1 kit
1 set of tools
1 set of small parts
1 set of gaskets
1 tool box with foam inlay
1 set of instructional material, consisting of: technical description of system, complete set of drawings with individual parts and parts list, description of maintenance and repair processes, suggested exercises; manufacturer's manual

# MT 182
## Assembly & maintenance exercise: screw pump

The illustration shows the tool box with kit and tools. The fully assembled pump is shown in the foreground.

### Description

- **practical exercise on the assembly and maintenance of a screw pump**
- **part of the GUNT-Practice Line for assembly, maintenance and repair**

Screw pumps are positive displacement pumps and operate in a rotary manner, normally primed. The pump presented here can be used for a number of different fluids. These include any non-aggressive fluids with lubricating properties, with viscosities between 2...1500mm²/s, such as lubricating oil, vegetable oil, hydraulic fluid, glycols, polymers and emulsions. Typical applications include: lubricating diesel motors; gears; gas, steam and water turbines; and cooling and filtration circuits in large-scale machines and hydraulic systems.

The MT 182 kit forms part of the GUNT-Practice Line for assembly, maintenance and repair designed for training at technical colleges and in company training centres.

A close link between theory and practice is key to the learning content. The kit is ideally suited to project-based learning with a particular empasis on 'hands-on' work. Independent working by the students is assisted and encouraged. Learning in a small team offers a useful learning format.

MT 182 enables a typical screw pump to be assembled and maintained. Students become familiar with all the pump components and their modes of operation. The parts are clearly laid out in a toolbox. Systematic assembly and disassembly of a pump is practiced.

The accompanying material details the individual steps involved in the exercise, and provides additional information on the areas of application, mode of operation and design of the pump.

### Learning objectives/experiments

- design and function of a screw pump and its components
- assembly and disassembly for maintenance and repair purposes
- replacing components (e.g. seals)
- troubleshooting, fault assessment
- planning and assessment of maintenance and repair operations
- reading and understanding engineering drawings and operating instructions



MT 182
Assembly & maintenance exercise: screw pump

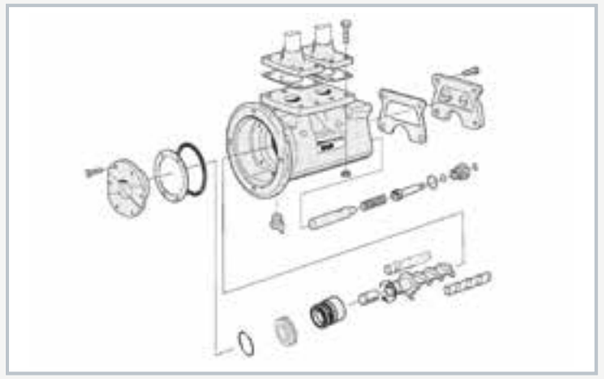

Exploded-view drawing of the screw pump

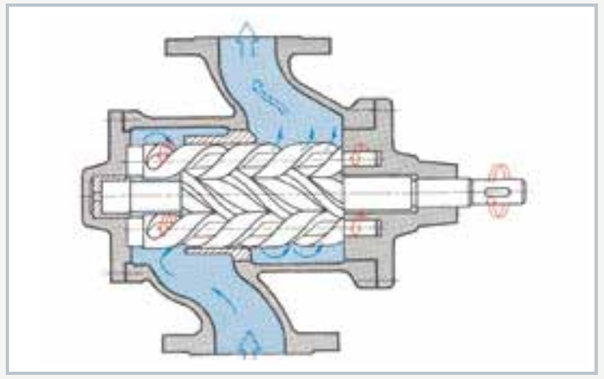

Principle of operation of the screw pump

Assembly of the srew pump: assembling the valve piston with the valve spring

### Specification

[1] learning concept for maintenance and repair exercises on a screw pump
[2] three-spindle screw pump with 1 driving spindle and 2 delivery spindles
[3] integrated pressure limiting valve; at overpressures a portion of the flow is returned to the intake side
[4] used for media with a kinematic viscosity in the range 2...1500mm²/s
[5] pump parts and tools housed contained in a tool box
[6] part of the GUNT-Practice Line for assembly, maintenance and repair

### Technical data

Screw pump
- power consumption: max. 1350W
- max. head: 12bar
- displacement: 13,9cm³/spindle revolution
- max. speed: 3600min⁻¹
- intake connection: DN25
- delivery connection: DN25
- grey cast iron housing

LxWxH: 690x360x312mm (tool box)
Weight: approx. 50kg

### Scope of delivery

1 kit
1 set of tools
1 set of small parts
1 set of gaskets
1 tool box with foam inlay
1 set of instructional material, consisting of: technical description of system, complete set of drawings with individual parts and parts list, description of maintenance and repair processes, suggested exercises; manufacturer's manual

# HL 960 Assembly station pipes and valves and fittings

Pipelines are key components of modern production plants and are used to transport gases and liquids. The main components of pipe systems are pipes, pipe fittings and valves and fittings. In order that pipe systems can work properly, it is necessary to use seals, connecting elements such as flanges, screw connections, sleeves and fastening elements for pipes. Therefore the correct assembly of pipes is an important area of responsibility for future plant technicians. With its assembly station HL 960, GUNT offers a real-scale system from pipeline construction and plant engineering. The assembly station consists of a variety of valves and fittings, pipe elements and tanks as well as seals and fastening components. A U-shaped frame allows variable construction of pipe systems, valves and fittings and functional devices such as pressure vessels.

HL 960 Assembly station pipes and valves and fittings

HL 960 Assembly station: pipes and valves and fittings

HL 960.01 as closed water circuit

A real functional test can be conducted with the HL 960.01 trainer after a pipe system has been constructed.

## Learning objectives / experiments

- basics: familiarisation with individual valves and fittings and pipe elements and understanding of their functions
- planning and selection: create pipe routing diagrams and parts lists and select individual components for piping projects
- design: construct pipe projects on the HL 960 frame according to a pipe routing diagram
- monitoring and evaluation: pre-assembled projects can be subjected to a real test with water; optionally, the HL 960.01 trainer offers a closed water circuit

This page shows some of the valves and fittings and pipe elements available for assembly projects. The joints only use removable connectors with seals that are suitable for multiple use. The pipe elements are ready to install and matched to installation lengths and flange connections.

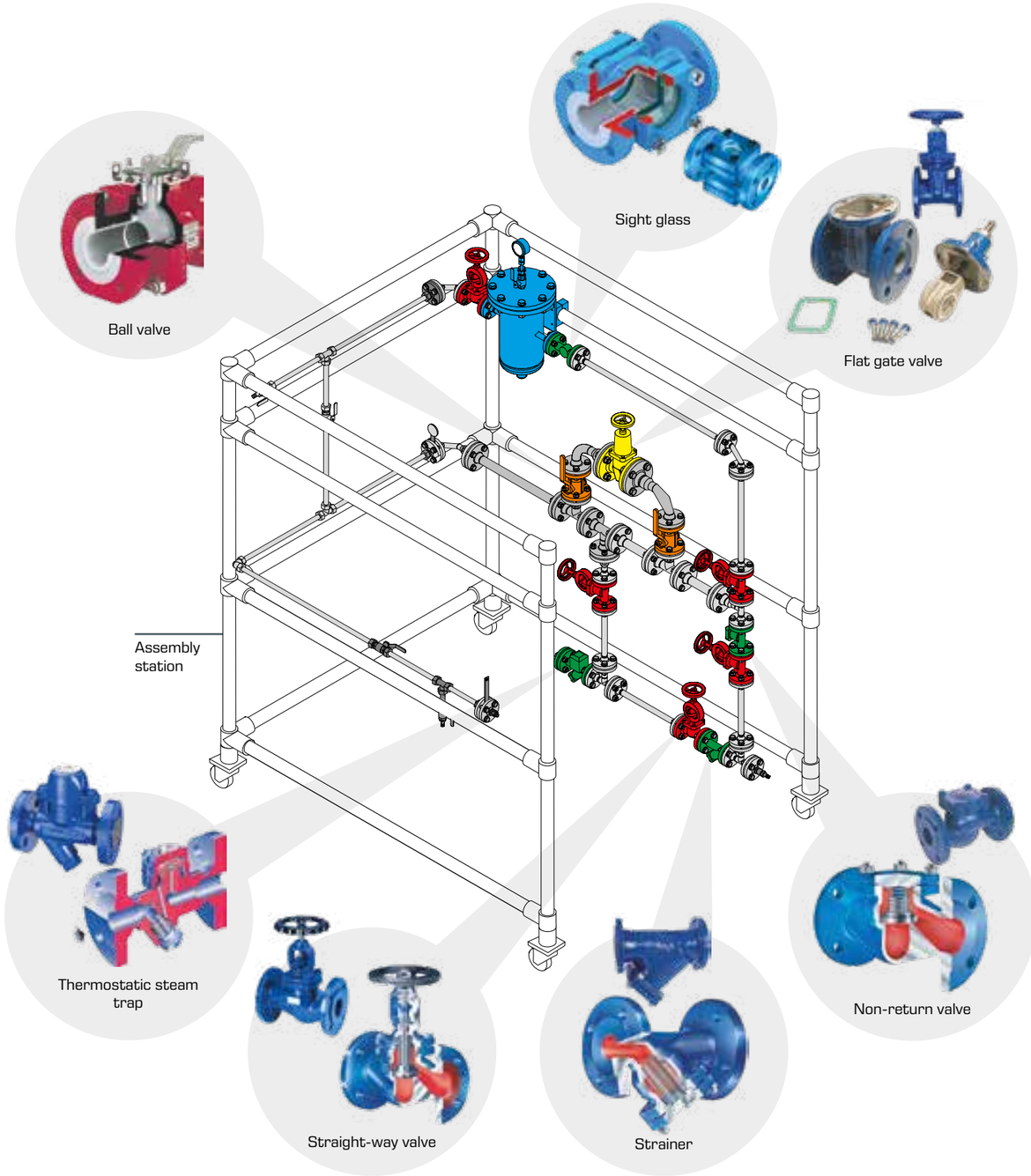

# HL 960
## Assembly station pipes and valves and fittings

### Learning objectives/experiments

- design and function of valves and fittings, piping elements and system components
- planning of piping and system installations according to specification, e.g. a process schematic
- selection of components and drafting of requirement lists
- technically correct preparation and execution of system assembly
- reading and understanding engineering drawings and technical documentation
- operational testing of the constructed systems (in conjunction with suitable water supply and disposal)

### Description

- **practically oriented assembly of real piping and system installations**
- **detailed, practically-based familiarisation with system components**

HL 960 is a practical exercise and training system which provides an entirely authentic introduction to industrial pipes and valves and fittings. The assembly kit comprises a wide variety of valve and fittings, piping elements and one pressure tank, as well as sealing and fastening components. A sturdy U-shaped mounting frame permits assembly of a variety of piping systems, plant components and functional units. The piping elements are prepared ready for assembly, and matched to installation lengths and flange connections. The components permit multiple assembly and disassembly.

The training system is designed for students to work together in a learning group. The complete process of constructing a system may take several days if all the steps are followed: obtaining information, planning, deciding, executing, checking and assessing.

The detailed instructional material assists in creating an effective and ordered learning process. It contains technical descriptions of all the system components as well as various specimen systems and installations.

Finished setups can be subjected to real testing with water. The pump system HL 960.01 (closed circuit) is available for this purpose.



# HL 960
## Assembly station pipes and valves and fittings

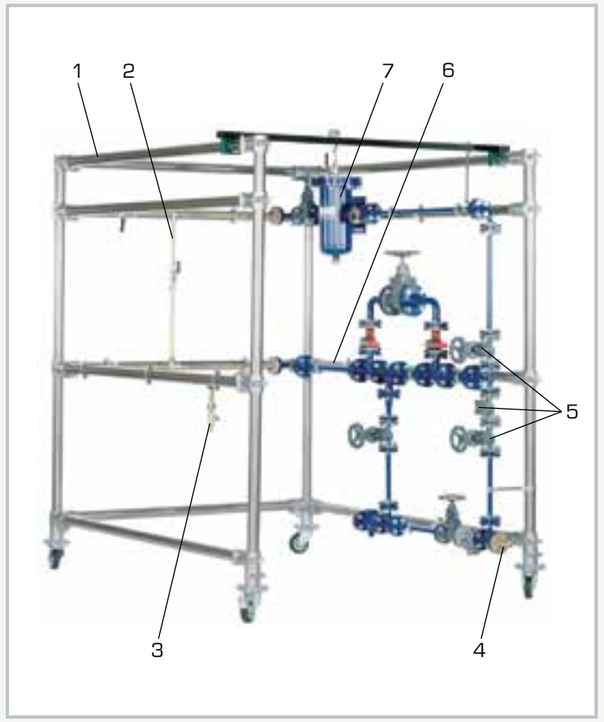


1 mobile frame, 2 DN15 pipe, 3 connection for HL 960.01 (outlet), 4 connection for HL 960.01 (inlet), 5 various valves and fittings, 6 DN25 pipe, 7 pressure vessel with manometer

The picture shows HL 960 with a completed specimen installation. In the foreground: pump system HL 960.01.

### Specification

[1] assembly exercise for engineering training
[2] piping network comprising pipe bends, elbows, T-pieces and transitions in nominal widths DN15, 25, 40
[3] pipe connections via flanges or cutting ring screw fittings
[4] standard commercially available flanged fittings: shut-off valve, non-return valve, strainer, condensation drain, inspection glass, ball valve, gate valve
[5] ball valve with cutting ring screw fitting
[6] pressure vessel with manometer, connection via DN15 flanges
[7] connection to water supply via hose with coupling
[8] mobile frame for mounting of pipe network
[9] the kit forms part of the GUNT assembly, maintenance and repair practice line

### Technical data

Flange fittings
- grey cast iron
- nominal pressure: PN16 for DN15, 25 / PN10 for DN40

Ball valve with cutting ring screw fitting
- brass, nickel-plated
- nominal pressure: PN25
- nominal size: G1/2"

Manometer: 0...4bar

LxWxH: 1540x1840x2020mm
Weight: approx. 300kg

### Required for operation

Water connection and drain via hoses with couplings

### Scope of delivery

1 frame
1 set of valves and fittings, pipes, piping elements with sealing and fastening material
1 set of tools
1 set of instructions, comprising drawing set and instructional material

# HL 960.01
## Assembly and alignment of pumps and drives

### Learning objectives/experiments

- installing a pump in a system
- connecting and aligning motor and pump
- familiarisation with various alignment methods:
  - straight edge, dial gauges
- familiarisation with key system components
- electrical installation of motor and switching elements
- assembly of pipes and instrumentation
- detail installation on a standard centrifugal pump
- reading and understanding engineering drawings, product documentation and circuit diagrams
- familiarisation with maintenance procedures
- planning assembly and maintenance steps
- in conjunction with HL 960
  - operational testing in a pipe network

### Description

- **installing a pump in a system**
- **alignment of electric motor and pump by different methods**

A complete work process when repairing work machines such as pumps consists of the following steps: assembly – alignment – test. The trainer described here was designed with industrial conditions in mind and is primarily intended for the practical training of maintenance engineers. It also offers a variety of topics and starting points for training in vocational schools.

The HL 960.01 trainer enables students to practise the entire maintenance process. On its own, the trainer can be used for assembly exercises with the option of aligning the drive and the pump. Combined with HL 960 Assembly station: pipes and valves and fittings, the HL 960.01 trainer can be used as a test system for the completely assembled piping system.

The trainer consists of an electric drive motor, a standard pump and a piping system with storage tank and can be operated independent of the water supply mains. Students can practise exchanging pumps for inspection or repair as part of the assembly exercise. The exercises cover the entire system and its individual subassemblies. A manometer displays the pressure at the outlet of the pump.

The position of the electric motor can be adjusted in three directions for alignment purposes. The alignment can either be checked in a conventional manner with a straight edge or with the reverse alignment method using two dial gauges. Non-contact, microprocessor-aided methods can also optionally be used (specific alignment systems are not included in the scope of delivery).



# HL 960.01
## Assembly and alignment of pumps and drives

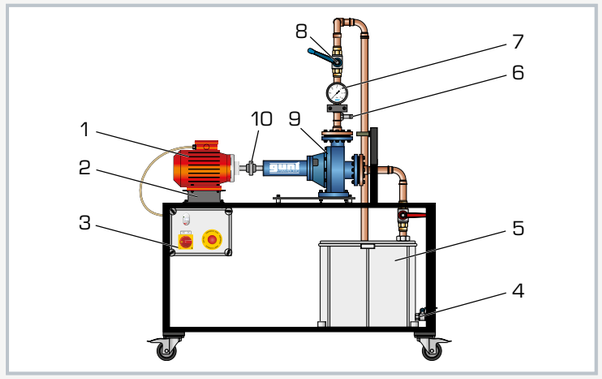


1 electric motor, 2 foundation for electric motor, 3 switch box, 4 HL 960 return connection, 5 storage tank, 6 HL 960 inlet connection, 7 manometer, 8 shut-off valve, 9 pump, 10 coupling

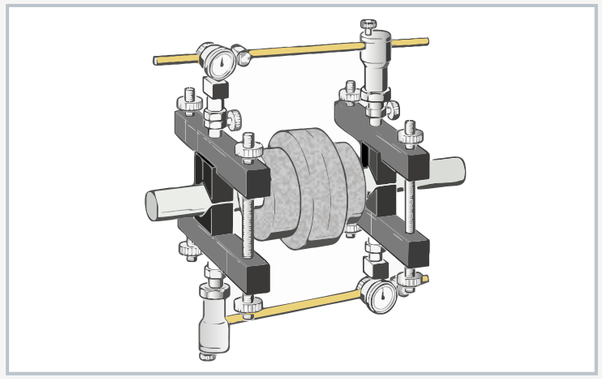

The illustration shows the principle of the dual radial dial gauge method of aligning shafts.

### Specification

[1] mobile system for alignment of a standard pump and its drive motor
[2] asynchronous electric motor with constant speed
[3] electric motor with positioning frame and fit plates for alignment
[4] pump and motor connected via coupling
[5] checking of alignment using straight-edge or dial gauges
[6] manometer at pump outlet
[7] pump with ball valves at inlet and outlet
[8] closed water circuit
[9] the system forms part of the GUNT assembly, maintenance and repair practice line

### Technical data

Centrifugal pump
- max. flow rate: 300L/min
- max. head: 16,9m
- power consumption: 750W

Asynchronous motor, single phase
- power output: 1100W
- speed: 3000min $^{-1}$

Storage tank: 96L

Measuring ranges
- dial gauges: 0...3mm/0...20mm, resolution: 0,01mm
- manometer: 0...1,6bar

230V, 50Hz, 1 phase
230V, 60Hz, 1 phase
LxWxH: 1250x830x1520mm
Weight: approx. 122kg

### Scope of delivery

1 trainer with centrifugal pump and drive
1 set of measuring aids, consisting of
  2 dial gauges 0...3mm,
  straight-edge,
  test shaft for sag measurement,
  dial gauge with magnetic holder, 0...20mm
1 set of tools
1 set of instructional material

# Assembly and maintenance excercises pipes, valves, fittings and pumps

**HL 962**
**Assembly stand for pumps**

**HL 962.01**
**Standard chemical pump**

**HL 962.02**
**Canned motor pump**

**HL 962.03**
**Side channel pump**

**HL 962.04**
**Standard chemicals pump with magnetic clutch**

**HL 962.32** **Pipe systems and fittings**
Set of pipes, valves and fittings and connecting elements, adapted to the respective order configuration.

**HL 962.30**
**Tank system**

## Learning objectives

Familiarisation with plant components:
- different pumps and their drives
- elements of pipeline construction
- valves and fittings, fastening and sealing elements, measuring instruments

Electrical connections of a pump drive plus displays and controls

Alignment of pump and drive motor

Operational measurements in piping and pumping systems

Repair and maintenance tasks and procedures

Reading and understanding technical documents such as: drawings, schematics or original operating instructions

Familiarisation with the procedures for commissioning

Repairing machines such as pumps, piping systems and valves and fittings is an important part of the work of maintenance technicians. In particular, the steps are divided into:
- the removal and installation of pumps for inspection, repair or replacement
- aligning the drive
- commissioning and testing the pump, e.g. for leaks

The complete exercise system that allows the individual steps to be practised consists of the following components:
1. the assembly stand HL 962 for holding pumps
2. a selection of typical centrifugal pumps in process engineering HL 962.01 – HL 962.04
3. the tank system HL 962.30
4. and the connecting pipes HL 962.32

Several assembly stands with identical or different pumps can be integrated into the training system and expanded to create a network.
The main component of the training system is the assembly stand, which holds the pumps. This assembly stand is prepared for the installation of different centrifugal pumps and provides the drive. Used in conjunction with the tank system and the connecting lines results in a complete system with a closed water circuit.

The training system represents complex project work for training pipeline and plant fitters as well as for service and maintenance mechanics. Several students can cooperate in a small study group. The planning and exercise instruction manuals can take several days to complete. The detailed technical documents provided, in conjunction with the teacher's notes, effectively support the learning process.

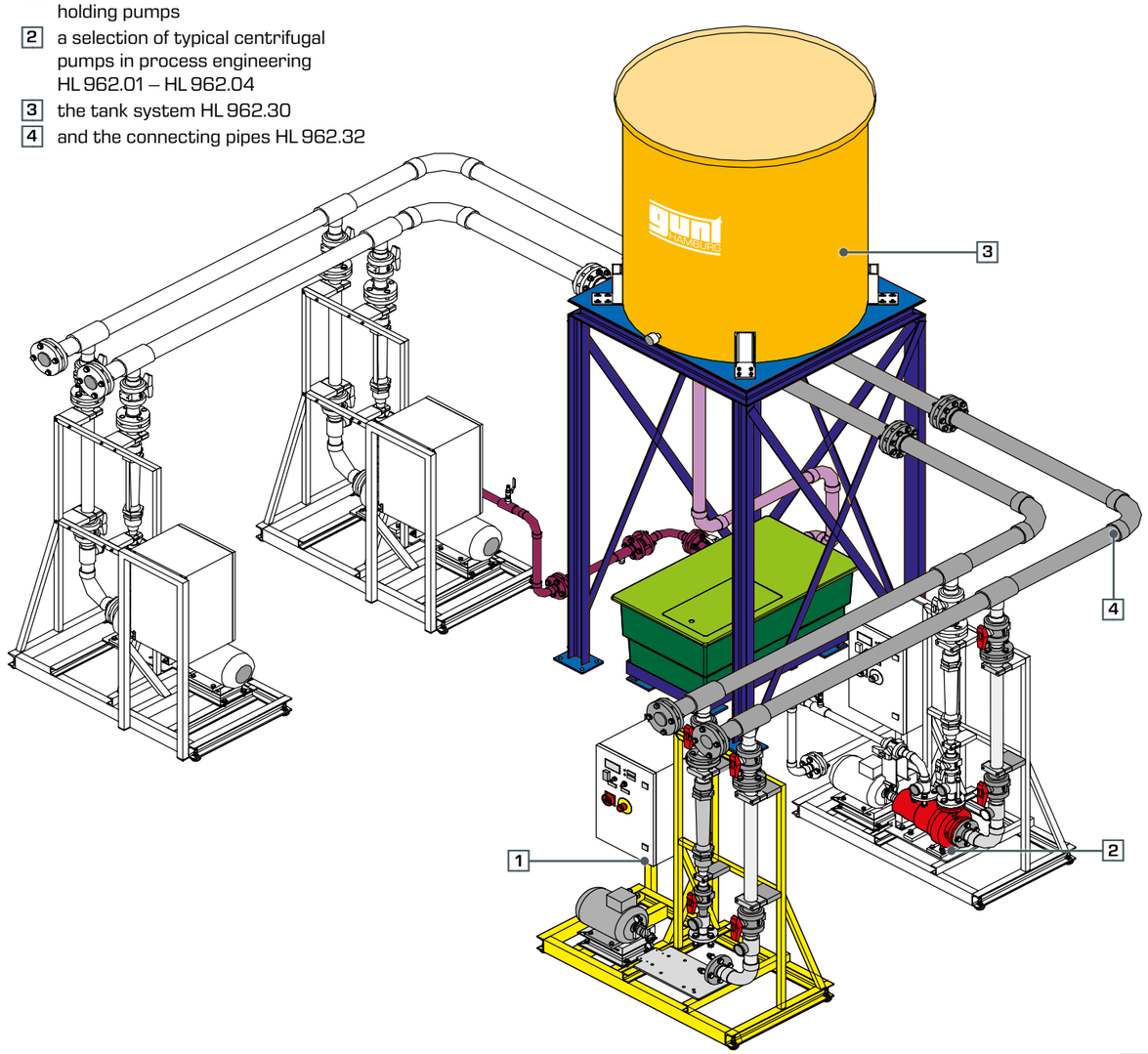

# 7 Fluidic experimental plants


| | |
|---|---|
| **Overview** Industrial scale fluidic experimental plants | 360 |
| **Overview** HM 124 Fluid mechanics experimental plant | 362 |
| **HM 124** Fluid mechanics experimental plant | 368 |
| **Overview** Assembly and maintenance excercises pipes, valves, fittings and pumps | 370 |
| **HL 962** Assembly stand for pumps | 372 |
| **HL 962.01** Standard chemicals pump | 374 |
| **HL 962.02** Canned motor pump | 375 |
| **HL 962.03** Side channel pump | 376 |
| **HL 962.04** Standard chemicals pump with magnetic clutch | 377 |
| **HL 962.30** Tank system | 378 |
| **Overview** HM 362 Comparison of pumps | 380 |
| **HM 362** Comparison of pumps | 382 |
| **Overview** HM 405 Axial-flow turbomachines | 384 |
| **HM 405** Axial-flow turbomachines | 386 |
| **Overview** HM 215 Two-stage axial fan | 388 |
| **HM 215** Two-stage axial fan | 390 |
| **Overview** HL 710 Planning and set-up of air duct systems | 392 |
| **HL 710** Air duct systems | 394 |
| **Overview** ST 510 Sanitation fittings training panel | 396 |
| **ST 510** Full-scale sewerage system | 398 |

# Industrial scale fluidic experimental plants

Industrial systems consist of various components that are often in separate locations. The individual modules are made up of various components in which the various work processes run. Here, one process may influence both the following and the preceding operations.

Interactions between the individual work processes affect the overall system. This effect occurs in all real, industrial plants. Studying the individual components alone does not reflect reality. Measuring results are not representative of an entire plant if the aspect of the interplay between the individual components and their interaction is not considered.

GUNT offers a range of large-scale equipment. GUNT's development team has paid attention to the mutual impact and influence of the processes on individual components when planning and designing the equipment. This means that the GUNT equipment can be used to conduct practical investigations and experiments with realistic measuring results.

Practical relevance is further enhanced by the use of industrial components and measurement techniques.

**Advantages of large-scale equipment**

- highly relevant to practice thanks to the use of industrial components and measurement techniques
- large experimental plants allow precise measurements with realistic values: small model plants often give contradictory results that have to be corrected due to disproportionately increasing losses

## Complex technical systems from industry

## Complex technical systems from the GUNT range

Air duct system in an office complex

HL 710 Air duct systems

Pump station in Achau, Germany

HL 962 Assembly stand for pumps

Axial-flow turbomachine by Sulzer Innotec

HM 405 Axial-flow turbomachines

Wastewater engineering in a large building

ST 510 Full-scale sewerage system

GUNT offers a range of large-scale equipment. The didactic concept of the experimental plants covers the following topics in order to offer practical training:

**Familiarisation with complex plant systems**

- interaction of the individual components in the overall system
- consequences of interactions between the individual work processes

**Design of complex plant systems**

- learn about planning, design and assembly of a large technical plant
- plan and practise maintenance
- functional tests and operational measurements
- apply technical competence and basic knowledge

**Application of metrology**

- recording measured values for a comparison of theory and practice
- all sensors are components from industry

# HM 124 Fluid mechanics experimental plant

HM 124 experimental plant in laboratory with optional pressure controlled system via a pressure vessel

**Experiments and learning objectives**

- experiments on pumps, valves and fittings and pipes
- operating behaviour of centrifugal pumps in stand-alone or parallel operation
- recording pump characteristics
- determining pump efficiencies
- influence of system characteristic on flow rate and operating point of the pumps
- measurements of pressure losses in pipe bends and in pipes of different roughness
- measurements of the velocity distribution in pipes
- visualization of the pipe flow
- determination of loss coefficients in fittings
- recording of opening characteristics and $K_v$ values
- adjustment and maintenance on valves
- experiments on flow and pressure control loops

This complex experimental plant consists of several modules: a pump station, two measuring sections, a control station, a tank system and an optional pressure controlled system. The modules themselves include a number of components: centrifugal pumps in different sizes, various valves, level and pressure controllers, pipes of different diameters and surface roughness, control valves and fittings, pipe fittings and various tanks to name a few.

The interaction of the various components determines the fluidic behaviour of the overall system. The individual processes interact with each other, resulting in interactions that affect the entire system. This effect occurs in all real, industrial plants. Studying the individual components does not reflect reality. In order to obtain comparable, objective measuring results on individual components, certain conditions must be met. For example, certain inlet and outlet sections are required for the measurement of valve characteristics.

This aspect has been taken into consideration when planning and designing the HM 124 experimental plant, so that objective measuring results can be achieved. The components are matched to each other to largely minimise the mutual interaction and influence of the processes on the individual components. This means rigorous experiments from the field of fluid mechanics can be performed. The system is also ideally suited for scientific investigations.

**The use of industrial components and measurement techniques teaches great practical relevance**

Industrial metrology

Industrial components

There are two different sized centrifugal pumps available for investigations on pumps.

The individual design of the measuring section offers the user a wide range of experiments.

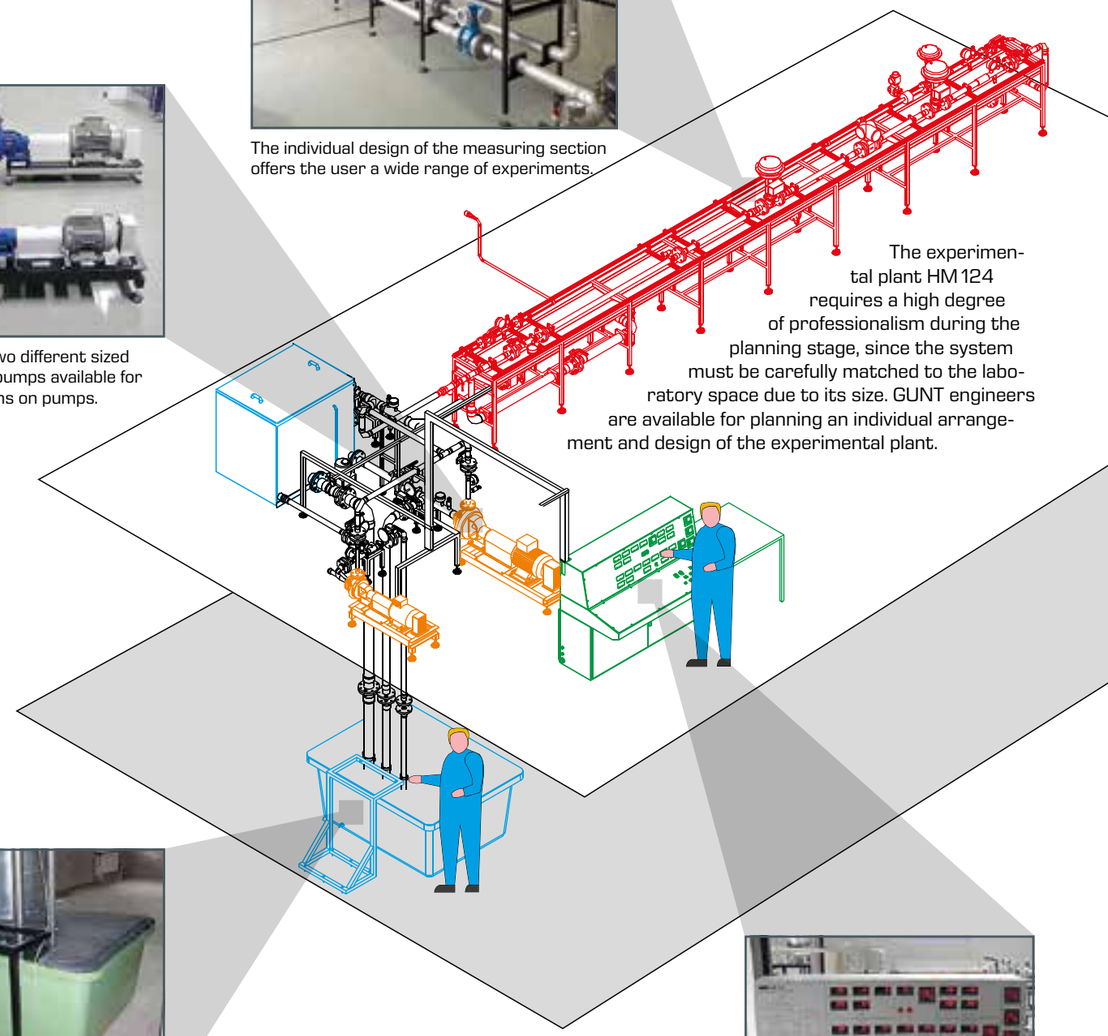

The experimental plant HM 124 requires a high degree of professionalism during the planning stage, since the system must be carefully matched to the laboratory space due to its size. GUNT engineers are available for planning an individual arrangement and design of the experimental plant.

If there is sufficient space available, a second intake tank may be added on the floor below the experimental plant. The resulting greater suction head makes it easier to conduct series of experiments on the operating behaviour of a pump in relation to the NPSH and cavitation.

The industrial scale control console ensures a clear and convenient operation.

# HM 124 Fluid mechanics experimental plant

## HM 124 measuring section components

HM 124
measuring section

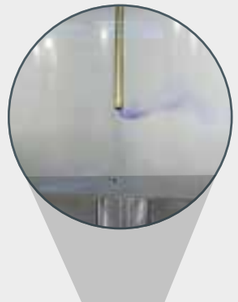

Measurement of pressure losses at 45° and 90° pipe bends.

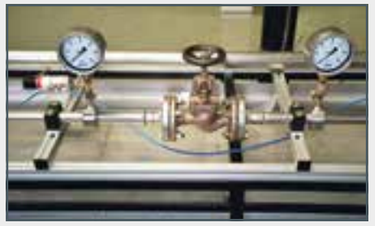

A corresponding measurement station has been incorporated into the measuring section to record a valve characteristic.

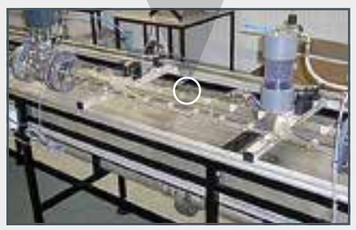

A transparent measuring section and a contrast agent means flows can be visualised.

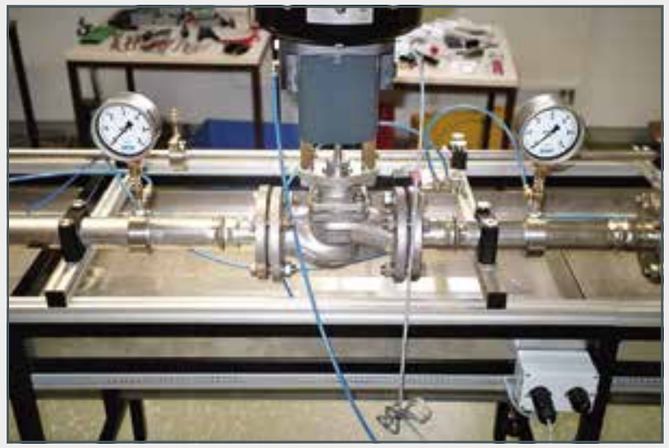

Measurements for determining the $K_v$ value are conducted on an industrial control valve. Other valves with standard flanges (not included) can be installed and studied.

Pipe sections with different diameters and made from different materials are available for measuring pressure losses. In addition to hydraulically smooth pipe sections there is also a pipe section with a defined roughness.

The experimental plant has two parallel measuring sections with nominal diameters of DN25 and DN50.

The individual pipe elements can easily be removed and installed by means of flanges. This means it is possible to construct individual pipe section configurations. Each measuring section is fitted with a valve at the inlet and outlet. When redesigning the plant, any water that escapes is collected in a pan below the measuring section.

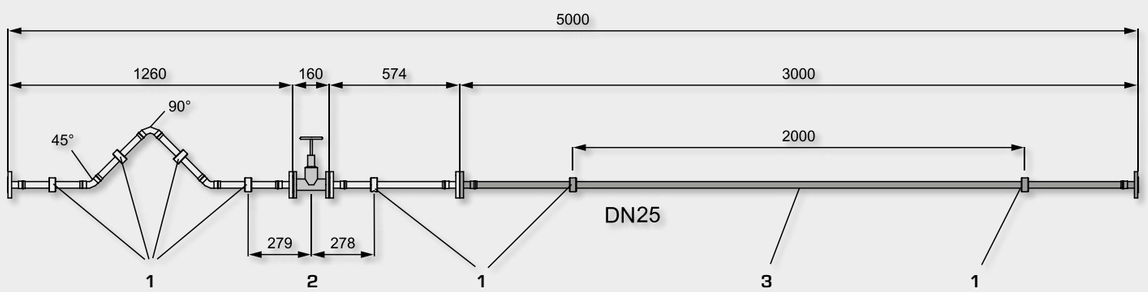


**1** measuring points for pressure losses in pipe elements, **2** measuring range for shut-off element, **3** defined pipe section with DN25 for measuring pipe friction coefficients

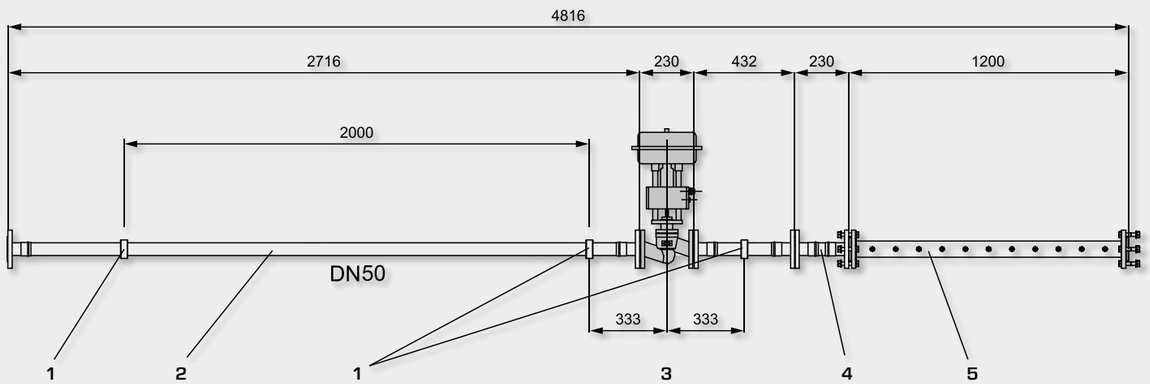


**1** pressure measuring points, **2** defined pipe section with DN50 for measuring pipe friction coefficients, **3** measuring range for $K_v$ value valve test, **4** pipe element or flow straightener, **5** transparent pipe used for observing the reduction of vortices after disturbances

# HM 124 Fluid mechanics experimental plant

## Pump station of HM 124

The two pumps in the pump station are operated from the control station. The speed can either be adjusted manually or automatically controlled.

The operating behaviour of pumps is studied. In conjunction with the software, it is possible to record characteristics at a constant speed and fixed efficiency. The collected data is used to determine characteristic fields for the pumps. The diagram below shows an example of system characteristic of a pump station with the operating points 1 and 2. The pump characteristics at different speeds are highlighted in blue, the efficiency in green.

HM 124 pump station

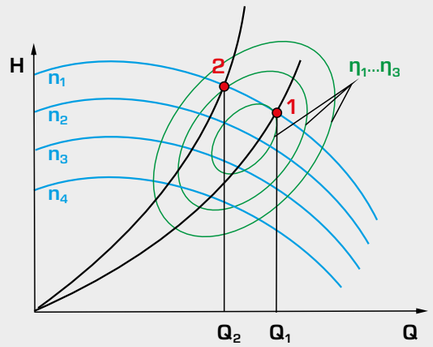


**H** head, **Q** flow rate, **η** efficiency, **n** speed, **1** + **2** operating points;
pump characteristics, efficiency

## Control station of HM 124

Transfer of measured data to a PC

HM 124 control station

All electronic displays and controls are housed in the control station. The experiments can be conducted manually or automatically. The measured values are displayed on digital displays on the control console. Data acquisition and the related GUNT software can be used to clearly display the measured data on a PC. Upon request, all measurement data is available as standard electrical signals (0 - 10 V, 4 - 20 mA).

## Data acquisition of HM 124

The software has its own sub-schematics available for the various experiment options.

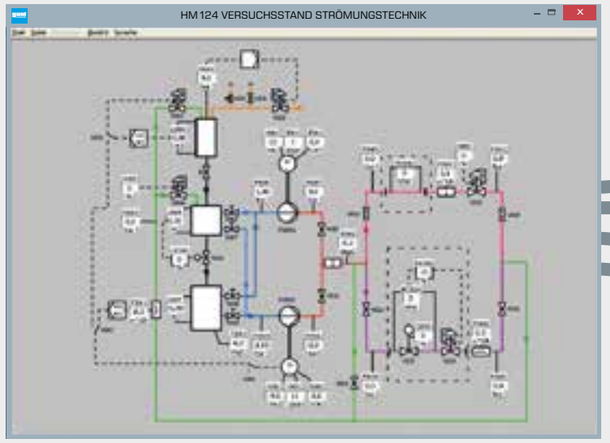


All of the measured values from the experimental plant HM 124 are shown in an overview schematic on the PC, giving a quick summary.

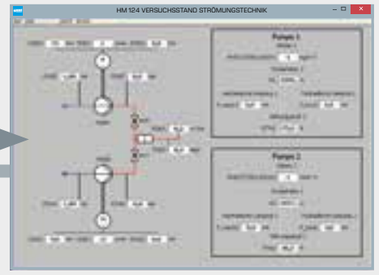

Record operating behaviour of pumps

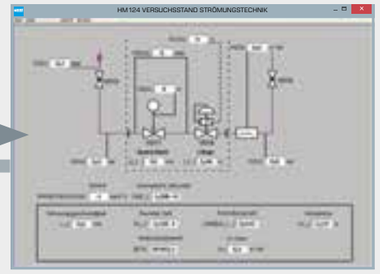

Determine opening characteristic and $K_v$ values at valves and fittings and control valves

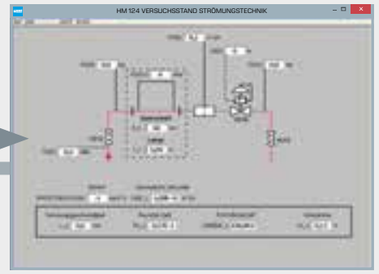

Measure pressure losses in pipe sections and pipe elements

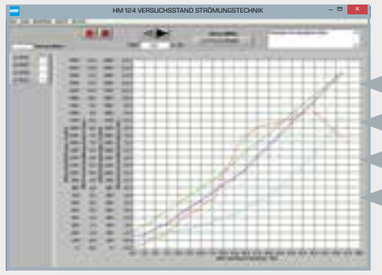

Measurement data can be evaluated quickly and clearly via the software and displayed graphically.

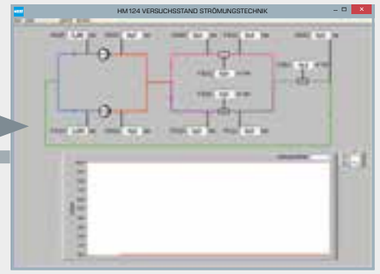

Record system characteristics

# HM 124
## Fluid mechanics experimental plant

### Description

- **large scale to ensure realistic measuring results**
- **operating behaviour of centrifugal pumps**
- **pressure losses in piping elements**
- **$K_v$ value determination of control valves**
- **flow rate and pressure control**

HM 124 allows precise investigations of different fluidic problems. The large scale of the experimental plant and the use of industrial components deliver results close to reality. The dimensions of the experimental plant allow sufficient inlet and outlet sections for the flow formation.

HM 124 consists of several assemblies: a pump station with two differently sized centrifugal pumps, a priming tank, two measuring sections – each of five meter length – one with a nominal diameter of 50mm (DN50), the other one with 25mm nominal diameter (DN25), and a control room consisting of a control console and data acquisition. Optionally the experimental plant may be operated with an additional tank on a lower level for higher suction heads. The complex system may be adjusted in a flexible way to the local facilities.

Many interchangeable piping elements allow an extensive experimental range. Using the measuring section DN50, the $K_v$ values of different control valves can be determined conforming to standards, e.g. an electropneumatic control valve. A transparent pipe section with ink injection allows to observe the flow in the wake of a fitting or a valve. To measure pipe resistances, pipe sections with different surface roughness are inserted in the measuring section DN25.

A pressure controlled system controls the system pressure, the flow rate is controlled by a flow controller and the speed of the pumps. The pumps are operated by the control console. Thus the mapping of pump characteristics is comfortably done.

The experimental plant is equipped with numerous sensors for pressure, flow rate, temperature, speed and torque. The measured values can be read on digital displays. At the same time, the measured values can also be transmitted directly to a PC via USB. The data acquisition software is included.

### Learning objectives/experiments

- experiments with pumps, valves and fittings and pipe sections
- operating behaviour of centrifugal pumps in individual or parallel operation
- measurement of the NPSH value of pumps
- pressure losses in pipe sections with different surface roughness
- pressure losses in pipe fittings
- $K_v$ value determination of control valves and fittings
- visual investigation of turbulent pipe flow
- experiments on flow rate and pressure controlled systems



# HM 124
## Fluid mechanics experimental plant

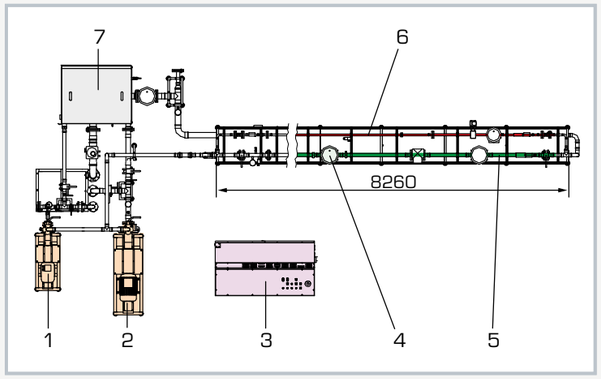


Flexible setup of the experimental plant: 1 pump 32/160, 2 pump 40/250, 3 control console, 4 measuring location for control valves, 5 measuring section DN50, 6 measuring section DN20/25, 7 upper priming tank

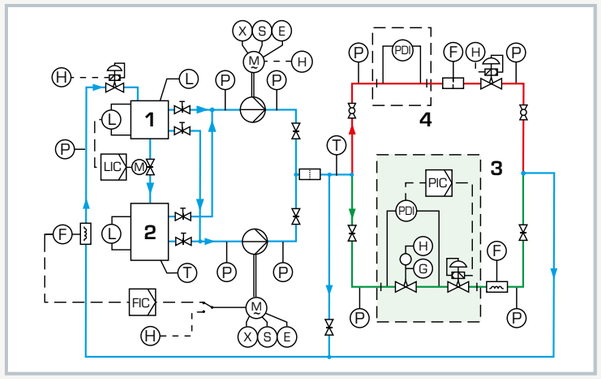


Complex process schematic: 1 upper priming tank, 2 additional tank in lower level, 3 measuring location for control valves, 4 measuring location for pipe sections; green: measuring section DN50, red: measuring section DN20/25, blue: pipes

Control station consisting of control console and data acquisition for convenient recording and analysis of the experiments

### Specification

[1] experimental plant in laboratory scale
[2] 2 measuring sections, each of 5m length
[3] 2 centrifugal pumps including electrical and mechanical measurement, variable speed via frequency converter
[4] measuring location DN50 conforming to standards to determine $K_v$ values in control valves
[5] interchangeable piping elements
[6] flow controlled system
[7] separate control station with control console and data acquisition
[8] electronic measurement and digital display of all important measured values at the control console
[9] differential pressure control at determination of $K_v$ value
[10] GUNT software for data acquisition via USB under Windows 7, 8.1, 10

### Technical data

Pipe system
- nominal diameters: DN25, DN50, DN80, DN100
- pressure stage: PN10
- priming tank: 500L (optional tank 1200L)
- control valves: 1x $K_{vs}$10, 2x $K_{vs}$40, 1x $K_{vs}$100

Pumps, speed: 300...3000min$^{-1}$
- norm pump 32/160, 20m$^3$/h, 34,7m, 4kW
- norm pump 40/250, 40m$^3$/h, 66,5m, 11kW

Pipe sections
- 1: length: 3m, smooth/rough, DN25/DN20
- 2: length: 3m, smooth, DN50
- 3: length: 1,2m, 10 measuring connections, transparent, DN50

Measuring ranges
- pressure: 8x 10bar, 2x -1...0,6bar
- differential pressure: 2x 0...1,6bar
- flow rate: 1x 0...50m$^3$/h, 1x 0...100m$^3$/h
- orifice plate flow meter: DN25, 0...0,6bar

400V, 50Hz, 3 phases
LxWxH: 11450x4500x2400mm
Weight: approx. 1000kg

### Required for operation

water connection: 1,5m$^3$/h
PC with Windows recommended

### Scope of delivery

1 pump station
2 measuring sections
2 priming tanks
1 control console
1 set of accessories
1 GUNT software CD + USB cable
1 set of instructional material

# Assembly and maintenance excercises pipes, valves, fittings and pumps

**HL 962**
**Assembly stand for pumps**

**HL 962.01**
**Standard chemical pump**

**HL 962.02**
**Canned motor pump**

**HL 962.03**
**Side channel pump**

**HL 962.04**
**Standard chemicals pump with magnetic clutch**

**HL 962.32** **Pipe systems and fittings**
Set of pipes, valves and fittings and connecting elements, adapted to the respective order configuration.

**HL 962.30**
**Tank system**

## Learning objectives

Familiarisation with plant components:
- different pumps and their drives
- elements of pipeline construction
- valves and fittings, fastening and sealing elements, measuring instruments

Electrical connections of a pump drive plus displays and controls

Alignment of pump and drive motor

Operational measurements in piping and pumping systems

Repair and maintenance tasks and procedures

Reading and understanding technical documents such as: drawings, schematics or original operating instructions

Familiarisation with the procedures for commissioning

Repairing machines such as pumps, piping systems and valves and fittings is an important part of the work of maintenance technicians. In particular, the steps are divided into:
- the removal and installation of pumps for inspection, repair or replacement
- aligning the drive
- commissioning and testing the pump, e.g. for leaks

The complete exercise system that allows the individual steps to be practised consists of the following components:
1. the assembly stand HL 962 for holding pumps
2. a selection of typical centrifugal pumps in process engineering HL 962.01 – HL 962.04
3. the tank system HL 962.30
4. and the connecting pipes HL 962.32

Several assembly stands with identical or different pumps can be integrated into the training system and expanded to create a network.

The main component of the training system is the assembly stand, which holds the pumps. This assembly stand is prepared for the installation of different centrifugal pumps and provides the drive. Used in conjunction with the tank system and the connecting lines results in a complete system with a closed water circuit.

The training system represents complex project work for training pipeline and plant fitters as well as for service and maintenance mechanics. Several students can cooperate in a small study group. The planning and exercise instruction manuals can take several days to complete. The detailed technical documents provided, in conjunction with the teacher's notes, effectively support the learning process.

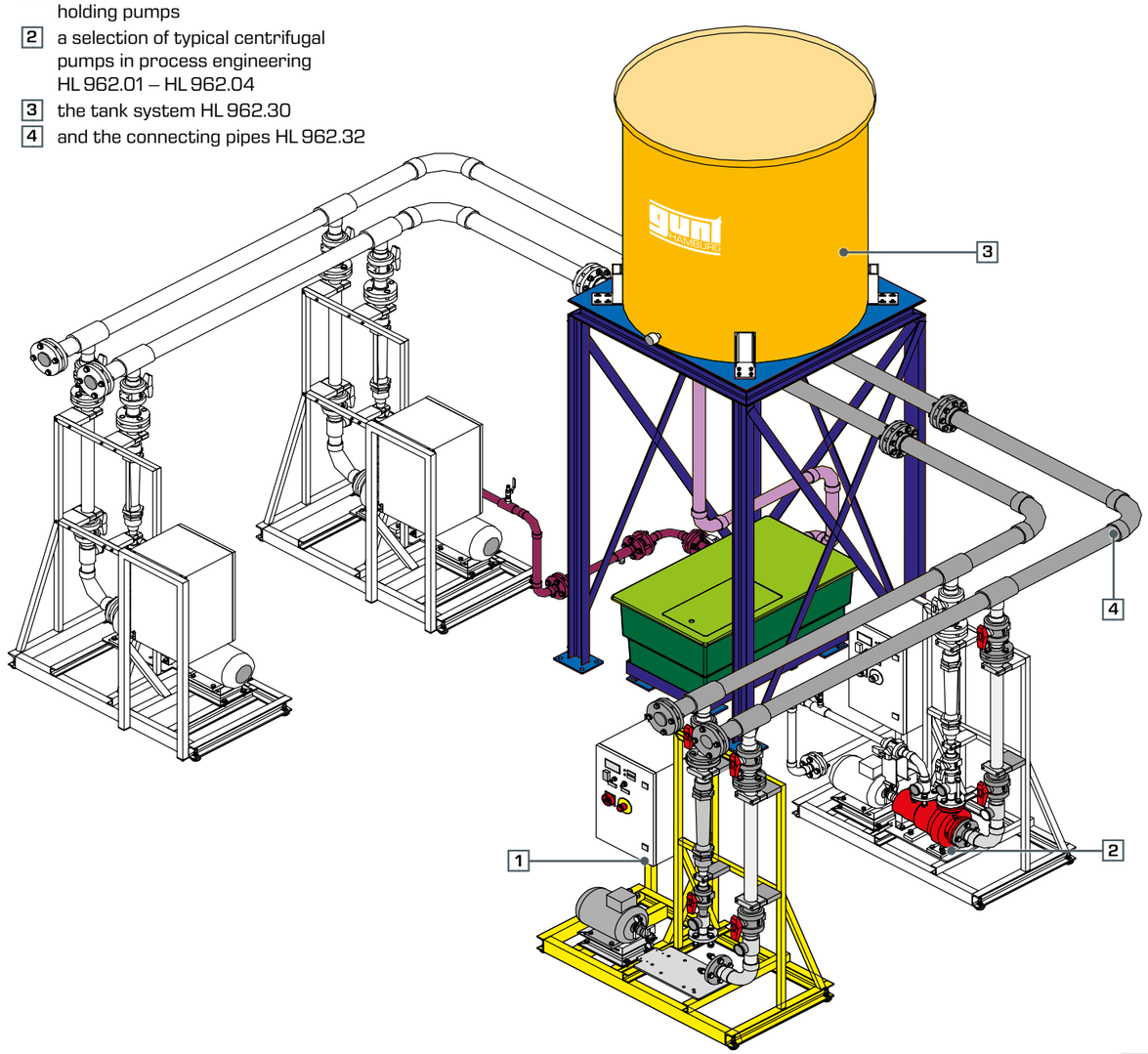

# HL 962
## Assembly stand for pumps

The illustration shows a similar unit.

### Learning objectives/experiments

- in conjunction with an accessory pump (standard chemicals pump HL 962.01, canned motor pump HL 962.02, side channel pump HL 962.03, standard chemicals pump with magnetic clutch HL 962.04) and a suitable water supply, e.g. HL 962.30 with HL 962.32
  - mounting of the pump and alignment of the electric motor
  - familiarisation with various methods of aligning the motor and pump
  - commissioning and leak testing
  - recording a pump characteristic
  - comparison of various pump types (only if multiple pumps are available)

### Description

- **mounting of different pumps (available as accessories)**
- **alignment of motor and pump by different methods**
- **base unit when constructing a complex piping system**

The individual steps for repairing driven machines such as pumps are: removal and installation of pumps for inspection, repair or replacement; aligning the drive and commissioning and checking the pump, e.g. for leaks.

In conjunction with the HL 962.30 tank system, the HL 962.32 connecting pipes and one of the four HL 962.01 – HL 962.04 pumps, the HL 962 assembly stand forms a complete training system for complex piping and plant systems. The training system forms a closed water circuit.

The assembly stand HL 962 includes a three-phase asynchronous motor with frequency converter as the drive and pipes with valves to adjust the pressure. A pump from the accessory equipment is attached to the base plate of the assembly stand and connected to the drive and the pipes. The pumps that are available as accessories are typical centrifugal pumps used in process engineering.

The position of the asynchronous motor can be adjusted in three directions for alignment purposes. The alignment can either be checked in a conventional manner with a straight edge or with the reverse alignment method using two dial gauges. Non-contact, microprocessor-aided methods can also optionally be used (specific alignment systems are not included in the scope of delivery).

Manometers indicate the pressures upstream and downstream of the pump. The flow rate is measured with a rotameter. Speed and power output of the motor are indicated on digital displays.



HL 962
Assembly stand for pumps

1 flange connections to connect HL 962 to HL 962.30, 2 switch box with displays and controls, 3 electric motor, 4 mounting plate for test pump, 5 flange connections for test pump, 6 manometer, 7 valve, 8 flow meter

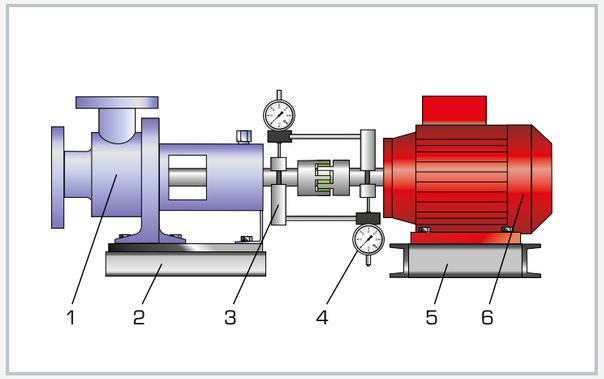


1 HL 962.01 pump, 2 pump base plate, 3 bracket for dial gauge, 4 dial gauge, 5 motor base plate, 6 electric motor

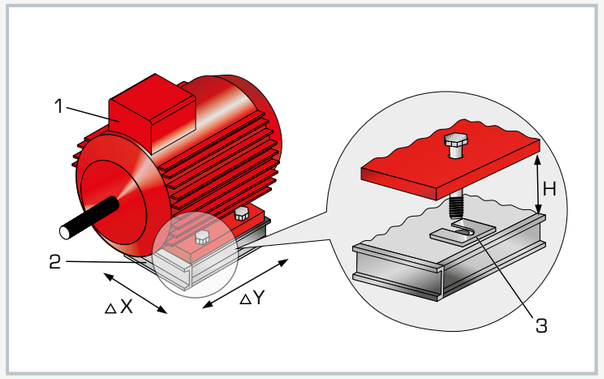


Aligning the electric motor (height, x and y direction): 1 electric motor, 2 base plate, 3 fitting plates to adjust the height H

### Specification

[1] stand for mounting of various pumps
[2] asynchronous motor with variable speed via frequency converter
[3] electric motor with positioning frame and fit plates for alignment
[4] base plate prepared for mounting of various pumps
[5] alignment of motor and pump with straight-edge or by dial gauges
[6] switch box with speed adjuster and digital display of speed and power output
[7] frame with adjustable feet for levelling
[8] PVC piping
[9] water supply from tank system HL 962.30
[10] the system forms part of the GUNT assembly, maintenance and repair practice line

### Technical data

Three-phase AC asynchronous motor
- power output: 4kW, speed range: 0...1450min$^{-1}$

Connecting flanges for water supply
- intake side: DN50
- delivery side: DN50
- intake side channel pump: DN32

Fit plates as motor chocks
- 43x43mm
- 4 different thicknesses: 0,1 – 0,2 – 0,5 – 1,0mm, 20 of each

Measuring ranges
- pressure (inlet): ±1bar
- pressure (outlet): 0...16bar
- flow rate: 0...11m$^3$/h
- speed: 0...3000min$^{-1}$
- power: 0...4kW
- travel: 0...3mm, resolution: 0,01mm

400V, 50Hz, 3 phases
400V, 60Hz, 3 phases; 230V, 60Hz, 3 phases
LxWxH: 1300x750x1800mm
Weight: approx. 220kg

### Scope of delivery

1 assembly stand
1 set of tools
1 set of measuring aids: 2 dial gauges with attachment, 1 straight-edge
80 fit plates, differing thicknesses
1 set of instructional material

# HL 962.01
## Standard chemicals pump

### Learning objectives/experiments

- in conjunction with HL 962, HL 962.30 and HL 962.32
  - operation of a standard pump
  - recording the pump characteristic
  - leak testing
  - alignment of pump and drive motor

### Specification

[1] centrifugal pump as accessory for installation in HL 962
[2] drive and water supply provided by HL 962
[3] process configuration permits easy exchange of wearing parts
[4] pump hydraulic design according to ISO 2858
[5] pump technical requirements according to ISO 5199

### Technical data

Centrifugal pump (at nominal speed: 1450min$^{-1}$)
- max. flow rate: 9,5m$^3$/h
- max. head: 9,5m
- power consumption: 0,5kW

Connecting flange
- delivery side: DN32
- intake side: DN50

Materials
- housing, impeller: grey cast iron
- shaft: stainless steel

LxWxH: 570x240x300mm
Weight: approx. 43kg

### Scope of delivery

1 pump
1 manual

### Description

- **centrifugal pump according to ISO 5199 as accessory for installation in assembly stand HL 962**

The standard pump used here is a centrifugal pump commonly used in the chemical and process engineering industries. The media being carried are often corrosive, toxic, explosive or volatile, or are carried at very high or very low temperatures. This places extreme stress on the pump.

The standard pump is a single-stage spiral casing pump in process configuration. The process configuration ensures quick and easy exchanging of wearing parts. The spiral housing is the most common design for single-stage pumps. Its design is precisely adapted to the flow of the pump. This enables the optimum efficiency levels to be attained. The hydraulic design and connecting dimensions of the pump conform to ISO 2858; the technical requirements are to ISO 5199.



# HL 962.02
## Canned motor pump

### Learning objectives/experiments

- in conjunction with HL 962, HL 962.30 and HL 962.32
  - operation of a canned motor pump
  - recording the pump characteristic
  - leak testing

### Specification

[1] hermetic pump for aggressive liquids
[2] accessory for installation in HL 962
[3] drive: three-phase squirrel-cage motor
[4] water supply provided by HL 962
[5] maintenance-free pump

### Technical data

Canned motor pump
- max. flow rate: 12m$^3$/h
- max. head: 39m
- power consumption: 3kW
- nominal speed: 2900min$^{-1}$

Connecting flange
- delivery side (radial): DN32
- intake side (axial): DN50

400V, 50Hz, 3 phases
LxWxH: 510x240x305mm
Weight: approx. 62kg

### Scope of delivery

1 pump
1 manual

### Description

- **hermetic centrifugal pump, particularly suitable for pumping liquid gases**
- **accessory for installation in assembly stand HL 962**

Canned motor pumps are used primarily in process engineering to pump aggressive, toxic, fire-hazard, explosive, delicate or volatile liquids (such as liquid gases). They are also suitable for pumping extremely hot or cold products, and liquids under high system pressure or under vacuum.

The pump is a fully self-contained centrifugal pump with no shaft seal, the drive is provided electro-magnetically via the canned motor. Its design means it is completely leak-tight and largely maintenance-free. Part of the primary flow is branched off by way of a self-cleaning filter to cool the motor and lubricate the journal bearings, and to provide hydraulic compensation for the axial thrust. After passing through the hollow shaft and the rotor chamber, the cooling medium is returned to the primary flow on the delivery side.

# HL 962.03
## Side channel pump

The illustration shows the pump with a fitting from HL 962.30 on the intake (grey elbow + manometer).

### Description

- **self-priming three-stage centrifugal pump**
- **accessory for installation in assembly stand HL 962**

Side channel pumps are self-priming centrifugal pumps, and are in widespread use. They can attain relatively high pressures at low flow rates. They are able to intake and deliver liquids containing gases. The pump can be started even when there is no head of liquid in the intake pipe. The side channel stage removes the air from the intake pipe and generates the necessary suction to intake the liquid.

The pump used here is three-stage. Drive and water supply are provided by the assembly stand HL 962.

### Learning objectives/experiments

- in conjunction with HL 962, HL 962.30 and HL 962.32
  - operation of a side channel pump
  - recording the pump characteristic
  - leak testing
  - alignment of pump and drive

### Specification

[1] three-stage self-priming pump for installation in HL 962
[2] drive and water supply provided by HL 962
[3] pump can intake and deliver air/water mixture
[4] relatively high head at low flow rate

### Technical data

Side channel pump
- 3 stages
- max. flow rate: 4,5m$^3$/h
- max. head: 122m
- power consumption: 3kW
- nominal speed: 1450min$^{-1}$
- max. speed: 1800min$^{-1}$

Connecting flange
- delivery side: DN32
- intake side: DN50

Materials
- housing: grey cast iron
- shaft: stainless steel

LxWxH: 470x220x240mm
Weight: approx. 30kg

### Scope of delivery

1 pump
1 manual

# HL 962.04
## Standard chemicals pump with magnetic clutch

### Description

- **hermetic centrifugal pump according to ISO 5199**
- **accessory for installation in assembly stand HL 962**

Magnetic drive pumps are used primarily in process engineering to pump aggressive, toxic and flammable liquids. Leakage of such liquids could result in major problems. Its design means it is completely leak-tight, even at continuous operation and under difficult usage conditions.

The viscosity of the delivered liquid is a key criterion in selecting a pump, as it determines the coupling torque to be transmitted. The torques transmitted by magnetic couplings are limited. As a result, magnetic drive pumps are not suitable for all operating conditions and media.

The pump is a fully self-contained centrifugal pump with no shaft seal. It is fitted with a permanent-magnetic synchronous drive complete with clutch. Drive and water supply are provided by the assembly stand HL 962.

### Learning objectives/experiments

- in conjunction with HL 962, HL 962.30 and HL 962.32
  - operation of a standard chemicals pump with magnetic clutch
  - recording the pump characteristic
  - leak testing
  - alignment of pump and drive

### Specification

[1] single-stage centrifugal pump with magnetic clutch as accessory for installation in HL 962
[2] drive and water supply provided by HL 962
[3] permanent-magnetic synchronous drive inside pump
[4] pump technical requirements according to ISO 5199

### Technical data

Pump (at nominal speed: 2900min$^{-1}$)
- max. flow rate: 12m$^3$/h
- max. head: 39m
- power consumption: 3,7kW

Connecting flange
- delivery side: DN32
- intake side: DN50

LxWxH: 625x240x300mm
Weight: approx. 60kg

### Scope of delivery

1 pump
1 manual

# HL 962.30
## Tank system

The illustration shows the complete layout of a pump system, comprising four HL 962 assembly stands, each with one pump (HL 962.01 – HL 962.04), the piping system HL 962.32 and the tank system HL 962.30.

### Description

- **water supply for a complex piping and pump system**
- **large high-level tank for normally primed pumps**
- **low-level tank for self-priming pumps**

The HL 962 assembly stands are connected with piping elements from HL 962.32 to form a complex piping and pump system. The tank system HL 962.30 is required so that the system can operate as a closed process.

The tank system consists of a large high-level tank with a mounting frame, a low-level tank and connections with shut-off devices to the PVC piping system HL 962.32.

The high-level tank has a capacity of approximately 1,5m³ of water. A manometer close to the base of the tank measures the base pressure, thereby indicating the fill level. The high-level tank supplies the intake pipes of normally primed centrifugal pumps, and ensures an adequate inflow head. Its inlet and outlet distribution points are located at a height of about 2m.

The low-level tank is also supplied with water from the high-level tank. It is used for the self-priming side channel pump. A float valve ensures an adequate water level. All pumps transfer the water back to the high-level tank via the piping system.

All materials in the tank system are fully corrosion-proof, as they are all manufactured from plastic.

The assembly stand (HL 962), tank system (HL 962.30) and piping system (HL 962.32) are interconnected by way of flanges. It is possible to expand the system and connect more assembly stands.



# HL 962.30
## Tank system

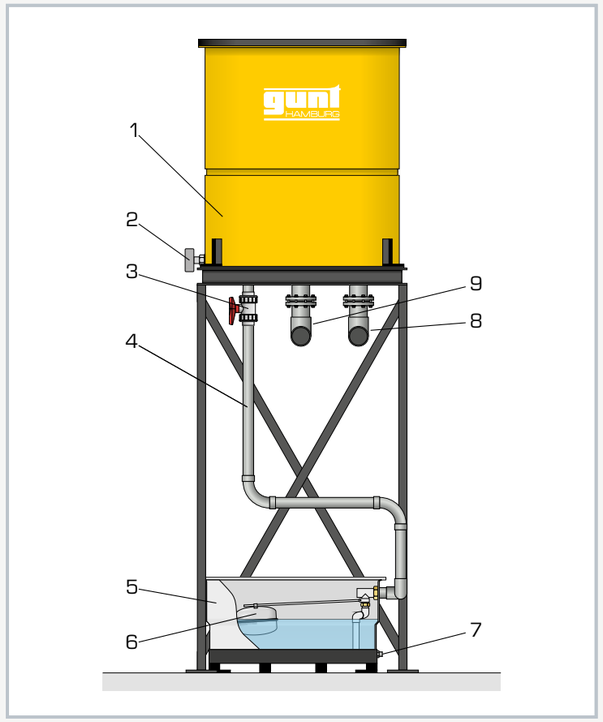


1 high-level tank, 2 manometer, 3 ball valve, 4 pipe to low-level tank, 5 low-level tank, 6 float valve, 7 connection for side channel pump, 8 distributor tank outlet, 9 distributor tank inlet

### Specification

[1] water supply for a complex piping and pump system
[2] high-level tank with cover and manometer on solid frame for supply to normally primed pumps
[3] low-level tank with cover and float valve to supply the self-priming side channel pump HL 962.03
[4] PVC piping to supply the low-level tank from the high-level tank
[5] connection between the HL 962.30, HL 962.32 and HL 962 elements via flanges
[6] high-level tank with frame

### Technical data

High-level tank with cover
- capacity: 1500L
- material: polyethylene
- distributor to pipes in base
- height of delivery side distributor: approx. 2m
- 1 manometer on supply tank: 0...1,6mWC

Low-level tank with cover
- capacity: 280L
- material: glass fibre-reinforced plastic

2 manometers to check the pressure at inlet of the side channel pump HL 962.03: -1...1,5bar

PVC pipes from HL 962.32
- tank inlet and outlet: DN80
- connection to side channel pump: DN32

LxWxH: 1350x1350x3860mm
Weight: approx. 350kg

### Scope of delivery

1 mounting frame
1 high-level tank with cover
1 low-level tank with cover
1 PVC pipe to interconnect the two tanks
1 set of assembly drawings

# HM 362 Comparison of pumps

In order to properly use a pump, it is important to know the pump's operating behaviour. The HM 362 trainer offers students the opportunity to compare the operating behaviour of three different types of pumps. The trainer includes two centrifugal pumps, a piston pump as positive displacement pump and a self-priming side channel pump. The side channel pump primarily works as a centrifugal pump and, depending on the fill level, may also act as a positive displacement pump. This means a special feature of the side channel pump is the ability to convey gases.

Investigations on series and parallel configurations can be conducted with the two identical centrifugal pumps.

The trainer provides a ready-prepared place for experiments with its own pump. This space is fitted with a variable speed three-phase motor, whose direction of rotation is reversible.

The measurements are supported and visualised by the GUNT data acquisition software.

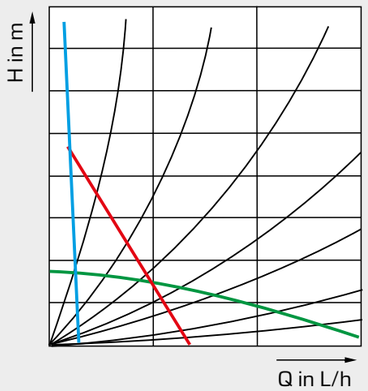


Compare operating behaviour of different types of pumps

centrifugal pump, side channel pump, piston pump, system characteristics;
**Q** flow, **H** head

Each pump testing station has a measuring device for detecting the drive torque

Each pump has an inlet and outlet above pressure sensors

Sensors for flow measurement

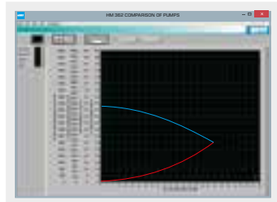

Record characteristic curves

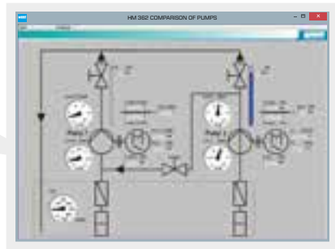

Display of measured data on displays on the trainer and in the GUNT software on a PC

Piston pump

Free space for investigation of additional pumps

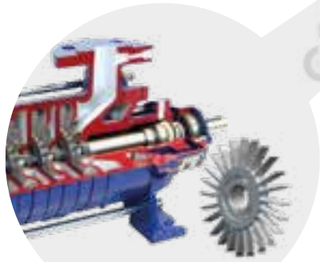

Side channel pump

Two centrifugal pumps

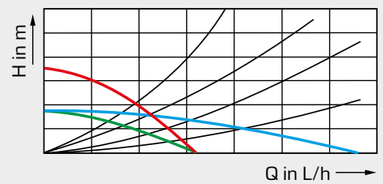


single pump, series configuration, parallel configuration, system characteristics;
**Q** flow, **H** head

# HM 362
## Comparison of pumps

### Description

- **investigation of the operating behaviour of centrifugal, piston and side-channel pumps**
- **all pumps driven separately by three-phase AC motors**
- **centrifugal pumps can be operated in series or parallel configuration**

The experiments familiarise students with various pump types, such as centrifugal and positive-displacement pumps.

The HM 362 trainer includes two centrifugal pumps, one piston pump as a positive-displacement pump and a self-priming side-channel pump. The side-channel pump works primarily as a centrifugal pump and, depending on liquid level, can also act as a positive-displacement pump. This means, as a special feature, the side-channel pump also permits gases to be pumped.

The pump being investigated pumps water in a closed circuit. In the process, the performance data of the pump and pressure losses in the pipeline are recorded. The centrifugal pumps can also be operated in parallel or in series configuration. Each pump is driven by a separate three-phase AC motor. The speed of the motors for the centrifugal pumps is variably adjustable by a frequency converter. All motors are mounted on swivel bearings, so the torque can be measured by way of a force sensor, enabling the mechanical drive power output to be determined.

One free position is likewise equipped with a reversible three-phase AC motor with variable speed. This position can be used for mounting of any pump.

Experiments demonstrate the basic operating behaviour of various pump types.

Relevant measured values can be read on digital displays. At the same time, the measured values can also be transmitted directly to a PC via USB. The data acquisition software is included. The performance data of the pump and losses in the pipeline are calculated by the software and represented by characteristic curves. The operating point of the pump can be determined from these characteristics.

### Learning objectives/experiments

- investigation and comparison of the operating behaviour of various pump types:
  - centrifugal pumps
  - piston pump (positive-displacement pump)
  - side-channel pump
- recording a pump characteristic curve
- recording a system characteristic curve
- determining efficiency
- investigation and comparison of parallel and series configuration of centrifugal pumps
- comparison of pump types



# HM 362
## Comparison of pumps

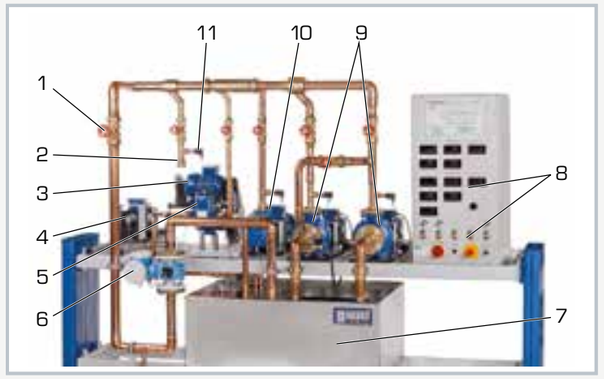


1 flow control valve (at outlet), 2 connection for additional pump, 3 piston pump motor, 4 motor for additional pump, 5 piston pump, 6 flow rate sensor, 7 storage tank, 8 switch cabinet with displays and controls, 9 centrifugal pump, 10 side-channel pump, 11 pressure sensor

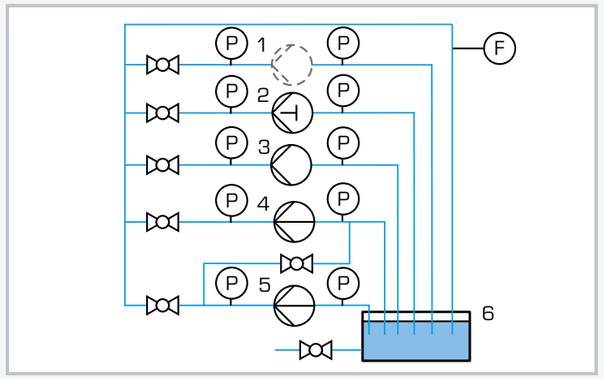


Process schematic of the trainer
1 free place for additional pump (provided by user), 2 piston pump, 3 side-channel pump, 4+5 centrifugal pump, 6 storage tank; F flow rate, P pressure

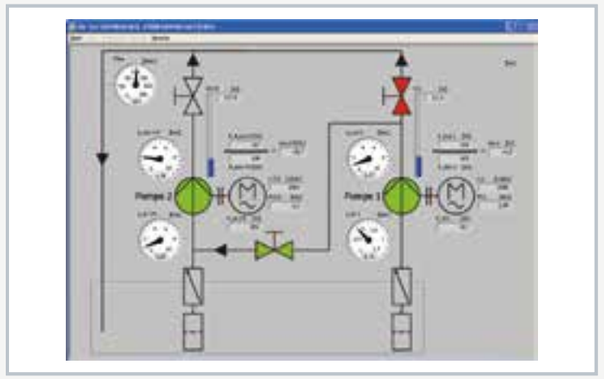

Software screenshot: series configuration of centrifugal pumps

### Specification

[1] experiments relating to key issues in pump engineering
[2] comparison of various pump types: centrifugal pump, piston pump, side-channel pump
[3] operation of centrifugal pumps in parallel or series configuration
[4] free position for additional pump
[5] three-phase AC motors for centrifugal pumps and additional motor with variable speed by frequency converter
[6] GUNT software for data acquisition via USB under Windows 7, 8.1, 10

### Technical data

Centrifugal pump 2x
- max. flow rate (Q): 300L/min
- max. head (H): 16,9m
- nominal speed: 2900min$^{-1}$

Three-phase AC motor 2x, for centrifugal pump
- power output: 1,1kW

Side-channel pump, self-priming, one-stage
- Q: 83,3L/min, H: 50m
- nominal speed: 1450min$^{-1}$

Three-phase AC motor for side-channel pump
- power output: 1,1kW

Piston pump
- Q: 17L/min, H: 60m
- nominal speed: 405min$^{-1}$

Three-phase AC motor for piston pump
- power output: 0,55kW

Three-phase AC motor, additional motor, reversible
- power output: 0,75kW
- speed range: 750...3000min$^{-1}$

Measuring ranges
- flow rate: 0...500L/min
- pressure (inlet): -1...1,5bar
- pressure (outlet): 0...10bar
- torque: 0...15Nm
- speed: 0...3000min$^{-1}$
- pump electrical power consumption: 0...2kW

400V, 50Hz, 3 phases
400V, 60Hz, 3 phases
230V, 60Hz, 3 phases
LxWxH: 2860x1200x1960mm
Weight: approx. 430kg

### Required for operation

PC with Windows recommended

### Scope of delivery

trainer, 1 GUNT software CD + USB cable, 1 set of instructional material

# HM 405
# Axial-flow turbomachines

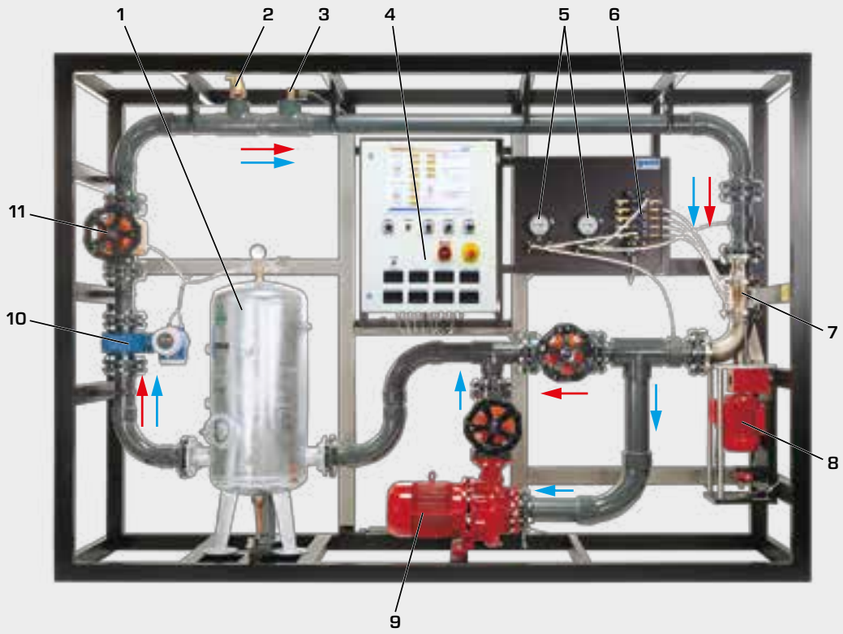


1 water tank with air cushion,
2 bleed valve,
3 solenoid valve for venting,
4 switch cabinet with displays and controls,
5 manometer for inlet and outlet pressure,
6 differential pressure sensor,
7 axial turbomachine,
8 motor/generator with torque measurement,
9 centrifugal pump for turbine operation,
10 electromagnetic flow meter,
11 valve for flow adjustment;

**red arrows** pump operation,
**blue arrows** turbine operation

The experimental plant HM 405 illustrates the function of an axial turbine with interchangeable rotors and stators. By replacing these, the turbomachine can be operated as a turbine or pump. Different rotors and stators respectively impellers and guide vane systems are provided so that their influence on the power characteristics can be investigated.

The housing is made of transparent material in order to provide insight into the flow processes upstream, between and downstream of rotor and stator respectively impeller and guide vane system.

In turbine mode the electric motor operates as a generator to generate electricity. In pump mode it operates as a drive for the pump. The electricity produced from the generator is fed into the centrifugal pump for turbine operation.

Practical experiments and calculations on the following topics can be performed depending on the operating mode:

- record characteristics
- determine dimensionless characteristic variables
- velocity triangles and pressure curves
- investigation of energy conversion within the turbomachine
- how blade / vane shape affects power and efficiency
- determine the outlet angular momentum and its effect on the power
- cavitation effects

The system can be depressurised in order to attach the guide vanes and blades. In this way the pump is emptied with no loss of water. The water runs back into the tank. Admitting compressed air to the tank refills the system. The compressed air is also used to adjust the upstream pressure. An automatic bleed valve removes the remaining air from the pipe system.

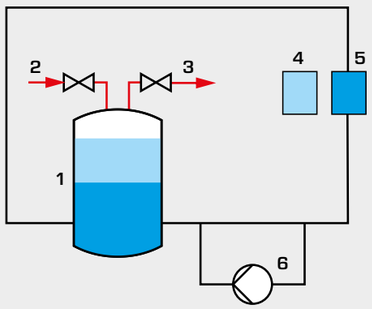


**1** water tank with air cushion, **2** compressed air, **3** bleeding,
**4** empty turbomachine, **5** filled turbomachine, **6** centrifugal pump;
refill system,
drain system

The 3-hole probe (1) can be used to measure the direction and velocity in the flow field directly upstream of, between and downstream of rotor and stator respectively impeller and guide vane system. These values are used to record the velocity triangles for the blade / vane shapes.

Varying load, speed and flow rate offers a wide range of experiments.

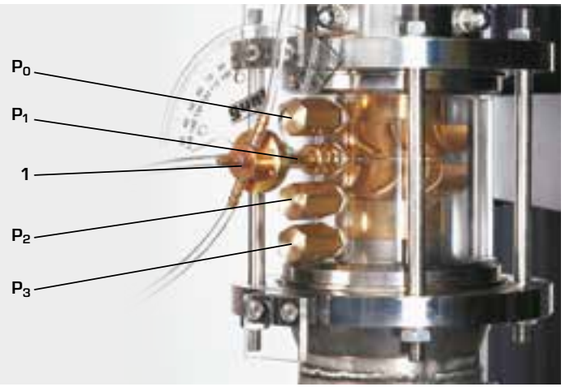


## Velocity triangles on turbines or pumps

| Reaction turbine | Action turbine | Pump |
|---|---|---|

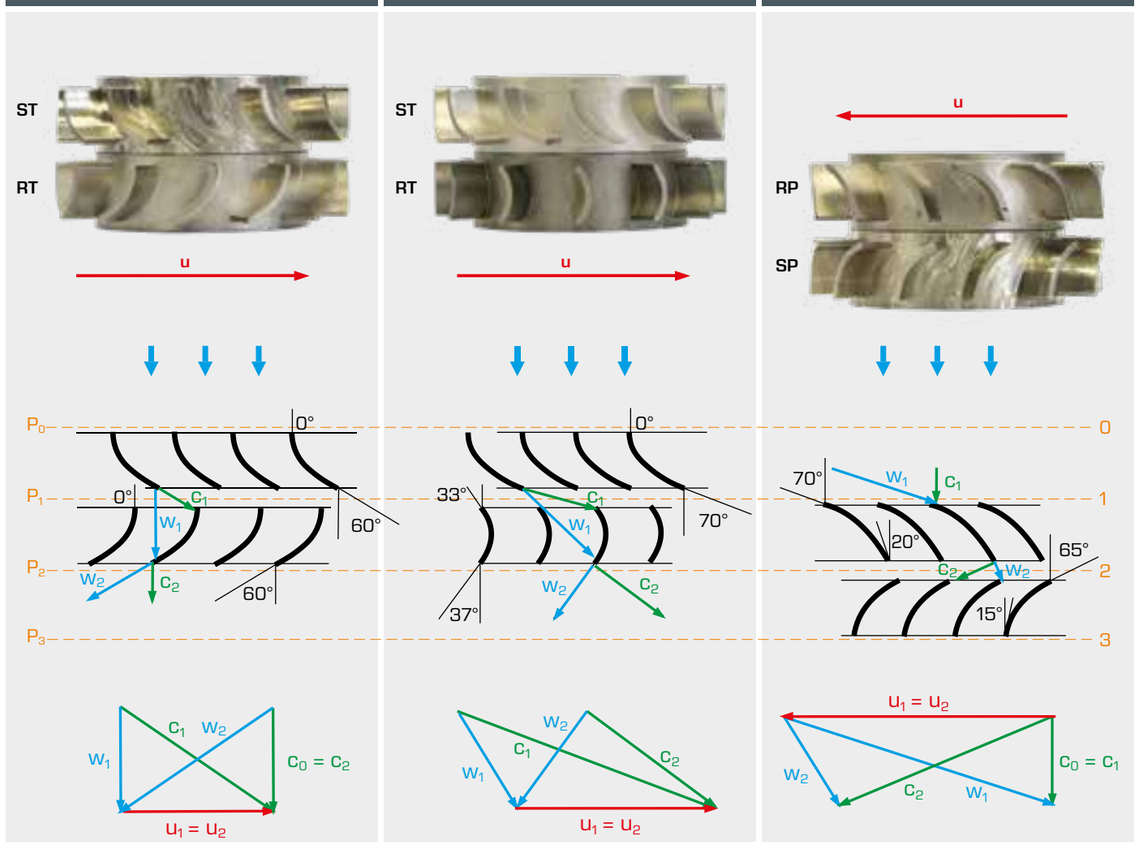


**ST** turbine stator, **SP** pump guide vane system, **RT** turbine rotor, **RP** pump impeller, **w** relative water velocity, **c** absolute water velocity, **u** circumferential velocity, $P_0 ... P_3$ pressure measuring points

# HM 405
## Axial-flow turbomachines

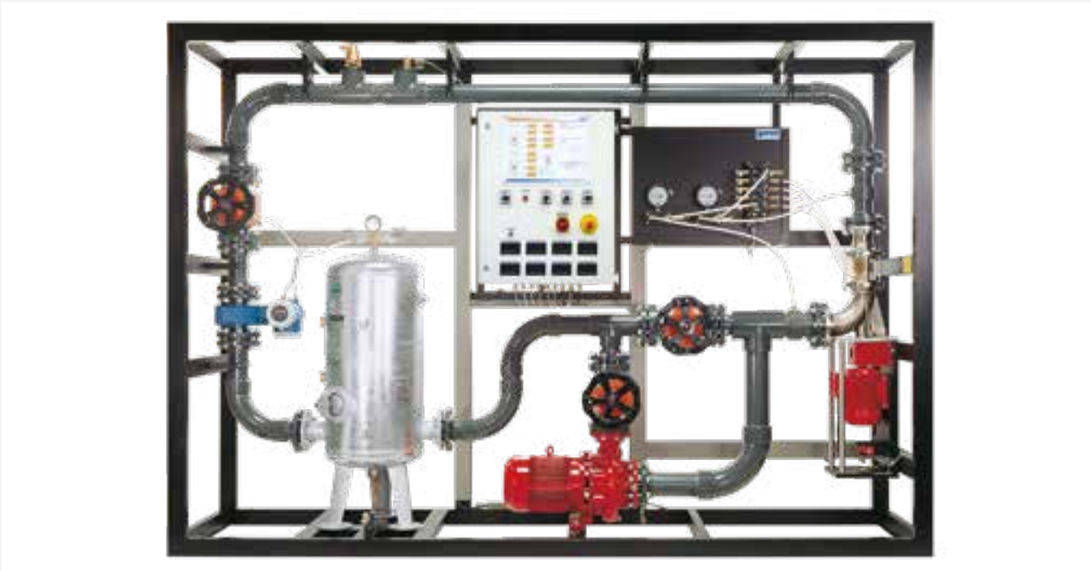

### Description

- **investigation of a single-stage axial turbomachine**
- **can be operated as pump or turbine by changing rotor, impeller and stator, guide vane system**
- **probe to determine flow conditions at inlet and outlet of rotor, impeller and stator, guide vane system**
- **transparent working area**

The core piece of the experimental plant is the axial turbomachine with attached asynchronous motor. It can be operated either as a pump or turbine. To this end, different rotors, impellers and stators, guide vane systems are used. Included in the scope of delivery are four rotors, impellers and four stators, guide vane systems supplied with different blade, vane angles. The experimental plant contains a closed water circuit with expansion tank and centrifugal pump. The compressed-air powered expansion tank allows the turbomachine to be converted without loss of water.

The asynchronous motor functions during turbine operation as a generator, and during pump operation as a drive. A powerful pump generates flow and pressure during turbine operation. The power that is generated by the turbine is fed into this pump.

The transparent housing allows a full view of the rotor, impeller and stator, guide vane system and flow processes. The 3-hole probe can be used to measure the direction and velocity in the flow field directly upstream of, between, and downstream of rotor, impeller and stator, guide vane system. These values are used to record the velocity triangles for the blade, vane shapes.

Operation under different pressure levels is possible in order to study cavitation.

The speed is detected contact-free by means of an inductive displacement sensor on the motor shaft. To determine the drive power, the asynchronous motor is mounted on swivel bearings and equipped with a force sensor to measure the drive torque. Manometers measure the pressures at inlet and outlet. Pressure sensors measure the differential pressures at rotor, impeller and stator, guide vane system. The flow rate is measured by an electromagnetic flow meter. The measured values are read from digital displays.

### Learning objectives/experiments

- recording characteristic curves
- determining dimensionless characteristics
- velocity triangles and pressure curves
- investigation of energy conversion within the turbomachine
- how blade, vane shape affects power and efficiency
- determining the outlet angular momentum and its effect on the power
- cavitation effects



HM 405
Axial-flow turbomachines

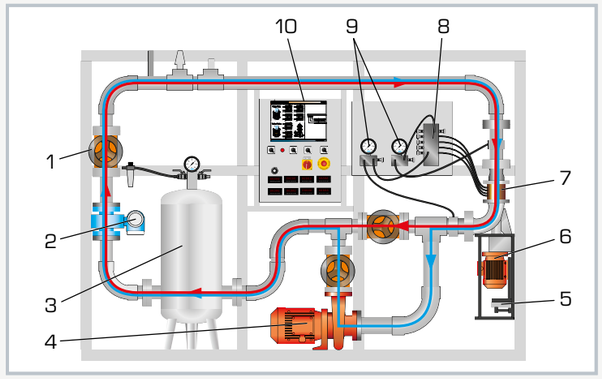


1 valve for adjusting the flow, 2 flow meter, 3 expansion tank with air cushion, 4 centrifugal pump for turbine mode, 5 force sensor for measuring the torque, 6 asynchronous motor, 7 axial-flow turbomachine, 8 differential pressure sensor, 9 manometer, 10 switch cabinet; red: pump mode, blue: turbine mode

The illustration shows cavitation effects in the working area of the axial flow turbomachine

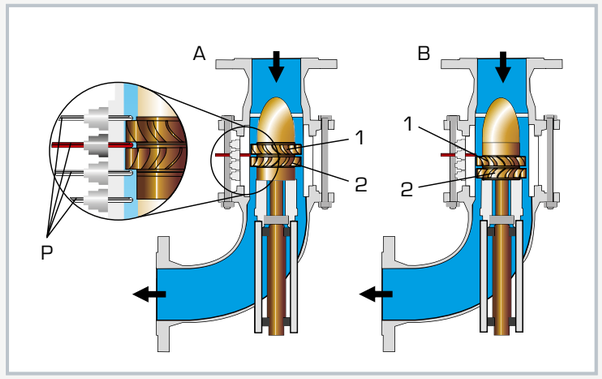


A: axial flow turbomachine as a turbine, 1 stator, 2 rotor;
B: axial flow turbomachine as a pump, 1 impeller, 2 guide vane system;
P pressure sensor

### Specification

[1] investigation of an axial flow turbomachine
[2] closed water circuit with expansion tank and centrifugal pump
[3] turbomachine may be operated as a turbine and as a pump
[4] two sets of impellers and guide vane systems for pump mode and two sets of rotors and stators for turbine mode with different inlet and outlet angles
[5] asynchronous motor with 4-quadrant operation via frequency converter
[6] recovery of the brake energy
[7] motor with pendulum bearing, torque measurement via lever arm and force sensor
[8] inductive speed sensor on the motor
[9] manometers for measuring the inlet and outlet pressures
[10] measuring probe and differential pressure sensor for recording the pressure curve in the turbomachine
[11] electromagnetic flow meter
[12] display of power consumption, torque, speed, pressure, differential pressure and flow rate

### Technical data

Centrifugal pump
- power: 5,5kW
- max. flow rate: 150m$^3$/h
- max. head: 10m

Asynchronous motor
- power: 1,5kW
- torque: 0...5Nm
- speed: 0...3000min$^{-1}$

Expansion tank: 150L

Measuring ranges
- pressure (manometer): 2x -1...5bar
- differential pressure: 5x 0...500mbar
- flow rate: 0...100m$^3$/h
- speed: 0...3000min$^{-1}$
- torque: 0...9,81Nm

400V, 50Hz, 3 phases
LxWxH: 3300x750x2300mm
Weight: approx. 620kg

### Required for operation

Compressed air connection: 3...10bar

### Scope of delivery

1 experimental plant
4 rotors
4 distributors / guide vanes
1 set of accessories
1 set of instructional material

# HM 215 Two-stage axial fan

Axial fans are often used in practice in building services engineering for air conditioning and ventilation systems. In order to increase the supply pressure axial fans can be connected in series. In this case they are known as two-stage fans.

With HM 215 GUNT offers experiments on a two-stage axial fan. In addition, the trainer allows the investigation of a fan in stand-alone operation. Theory and practice can be compared in a simple way.

The device is equipped with sensors for temperature and differential pressure. The flow rate is determined by differential pressure in the inlet nozzle.

**Learning objectives**

- determining the fan characteristic
- stand-alone or series configuration of axial fans
- determining the energy balance
- determining the pressure and velocity distribution on rotor and guide vane by means of a probe
- effect of rotating blade position

Measuring device with 3-hole probe for determining the differential pressure on rotor and guide vane

A carefully designed nozzle contour and a flow straightener at the air inlet ensure turbulence-free flow of the blades

The experimental unit is equipped with two high-power axial fans

Throttle valve at the end of the measuring section for adjusting the volumetric flow rate

Adjustable blade on the rotor hub

The angle of attack and exit angle, as well as the pressure of the air can be measured with an adjustable measuring probe along the blade radius. Adjusting the blades alters the angle of attack. The GUNT software simplifies measurements with the measuring device and enables the processing and visualisation of measured data.

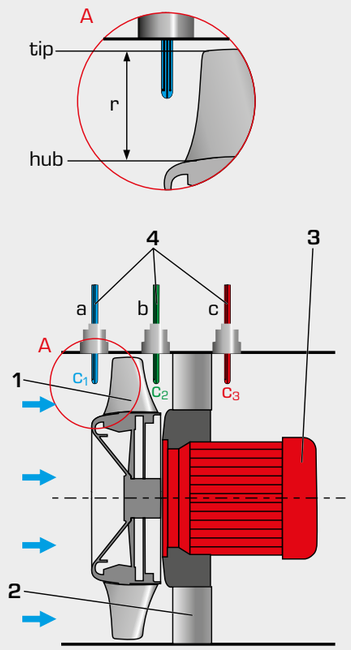


**1** adjustable blade on the rotor hub, **2** guide vane, **3** motor, **4** measuring points a-c with 3-hole probe (radial adjustable);

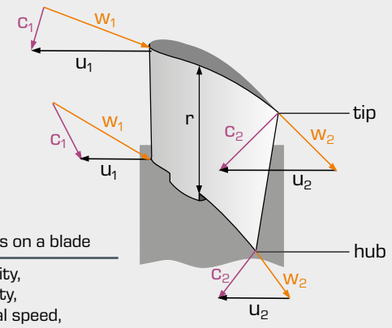


Velocity triangles on a blade

**c** absolute velocity,
**w** relative velocity,
**u** circumferential speed,
**r** radial position of the probe;

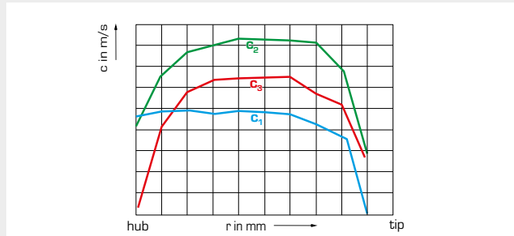


Velocity distribution

- pos. a upstream of rotor, $c_1$,
- pos. b downstream of rotor, $c_2$,
- pos. c downstream of guide vane, $c_3$

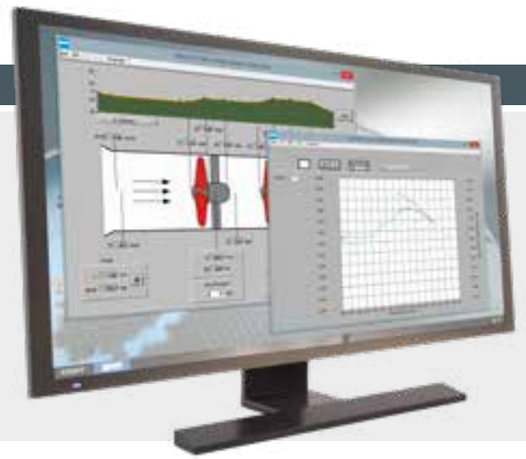

## Software

The GUNT software clearly displays the measurements on the PC and allows easy analysis of the measuring results. For example, the pressure curve in the measuring section can be clearly shown for different operating states.

# HM 215
## Two-stage axial fan

### Description

- **two axial fans in series configuration or in individual operation**
- **three-hole probe for determining pressure and velocity profile**

Axial fans are connected in series in plants to increase the pressure. In theory, connecting two fans in series doubles the pressure increase.

The HM 215 trainer allows the investigation of a two-stage axial fan. A measuring device is used to determine the pressure and velocity distribution.

The trainer includes a measuring section with two identical axial fans. The carefully designed nozzle contour and a flow straightener at the air inlet ensure a uniform velocity distribution with little turbulence in the measuring section. The rotors are equipped with individually adjustable blades to change the angle of attack. The fans are equipped with outlet guide vane systems. These guide mechanisms redirect the angular momentum of the outflow in the axial direction and allow an increase in pressure. A pipe bend may optionally be installed to rotate the flow at the outlet of the measuring section. One of the fans can be removed from the measuring section so that the remaining fan can be studied in individual operation.

In the measuring section there are measuring connections to detect the differential pressures and temperatures. The flow rate is measured via an inlet nozzle. The differential pressure and the angle of attack are detected radially at rotors and guide vane systems by means of the 3-hole probe. This enables the display of different pressure and velocity profiles. The measured values are read from digital displays and can at the same time be transmitted via USB directly to a PC where they can be analysed using the software included.

### Learning objectives/experiments

- determining the fan characteristic
- series configuration or individual operation of axial fans
- determining the energy balance
- determining the radial pressure and velocity distribution on rotor and guide vane system by means of a probe
- effect of the blade position



# HM 215
## Two-stage axial fan

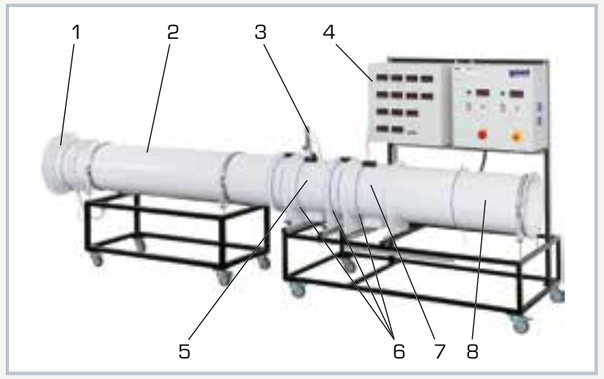


1 nozzle with flow straightener, 2 intake pipe, 3 measuring device, 4 switch box, 5 fan no. 1, 6 pressure measuring points, 7 fan no. 2, 8 throttle valve

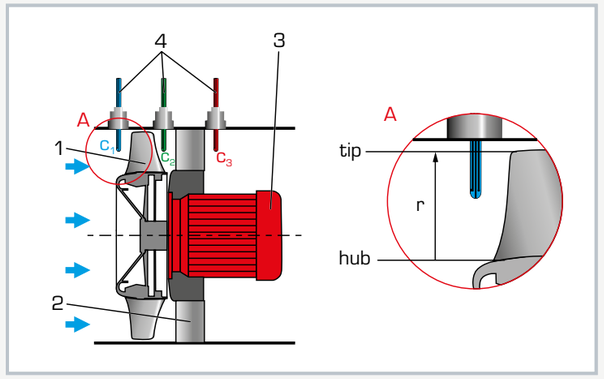


Fan with measuring device
1 adjustable blade on the rotor hub, 2 guide vane system, 3 motor, 4 measuring points with 3-probe hole; $c_1$ to $c_3$ absolute velocities, r radial position of the probe

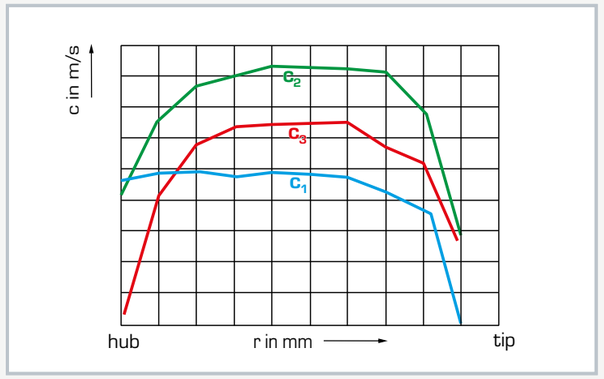


Velocity distribution along the blade in radial direction
blue: $c_1$ upstream of the rotor, green: $c_2$ downstream of the rotor, red: $c_3$ downstream of the guide vane system; v velocity, r radial position of the probe along the blade from hub to tip

### Specification

[1] investigate two-stage axial fan
[2] 2 identical single-stage fans in series configuration or individual operation
[3] individually adjustable blades
[4] fans both with variable speed via frequency converter
[5] flow-optimised nozzle and flow straightener for smooth, low-turbulence flow
[6] air flow in the pipe section can be adjusted via throttle valve
[7] optional pipe bend at the outlet for flow deflection
[8] measuring device with three-hole probe for determining the differential pressure on rotor and guide vane system
[9] sensors for pressure and temperature upstream and downstream of each fan
[10] volumetric flow rate measured via inlet nozzle
[11] GUNT software for data acquisition via USB under Windows 7, 8.1, 10

### Technical data

2 fans
- drive motor rated output: 3,45kW
- max. pressure difference: 798Pa
- speed: 0...2850min$^{-1}$
- blade angle adjustable up to 39°

Measuring section inner diameter: 400mm

Measuring ranges
- temperature: 0...100°C
- differential pressure: ±25mbar
- radial position of the probe: 100...200mm

400V, 50Hz, 3 phases
400V, 60Hz, 3 phases
LxWxH without pipe outlet: 4325x970x1800mm
Length with pipe outlet: 5225mm
Weight: approx. 250kg

### Required for operation

PC with Windows recommended

### Scope of delivery

1 trainer with 2 fans
1 pipe bend
1 measuring device
1 set of measuring hose with quick-release couplings
1 CD with GUNT software + USB cable
1 set of instructional material

# HL 710
# Planning and set-up of air duct systems

**System at original scale, individual set-up**

## Air duct systems with typical components from ventilation technology: set-up and experiments

### The components

Pipe bends

Reduction (left) and connection elements

Branches

Throttle valve (left) and iris diaphragm (right)

Disc valve (left) and slotted vent (right)

Filter

### The experiments

In the air duct system several components with measuring points for pressure measurements are installed. With an inclined tube and a digital manometer the static and dynamic pressure can be measured at these points. This allows a determination of the pressure losses of the individual components in the whole air duct system.

With the anemometer the air velocities and air flows are measured at the outlets of the system. The measured values are used to generate the system and fan characteristics. From the characteristics the operating point is determined.

**1** digital manometer, **2** inclined tube manometer, **3** anemometer

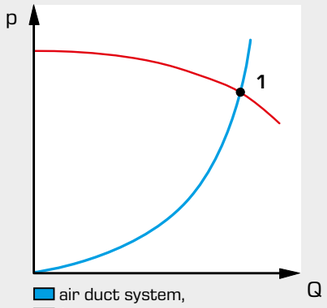

air duct system,
fan characteristic;
**1** operating point,
**p** pressure, **Q** flow rate

Measuring points for static and dynamic pressure

# HL 710
## Air duct systems

### Description

- **planning and setup of simple and complex air duct systems**
- **measurement of the dynamic and static pressures in air duct systems**
- **measurement of the air velocity and volumetric flow rate under different conditions**

Ventilation systems are used in many areas. They are used to ventilate offices, sports halls, production halls, conference halls etc. These systems consist of an air duct system and often other facilities for the conditioning of room air. There may also be elements for air purification or sound insulation, e.g. filters.

The trainer HL 710 examines how the air can be distributed in a building. The air duct system is supplied via a speed-controlled fan. The trainee constructs variable air duct systems from commercial components, such as pipes, pipe bends, branches, filters and disk valves. Connections for pressure measurements can be installed at any position.

The effects of the individual components on the pressure loss and thus on the velocity and flow rate of the air are examined. For this purpose there are two manometers with different measuring ranges and a manual device for measuring the air velocity. The fan characteristic is also determined and the power consumption of the fan is measured.

### Learning objectives/experiments

- plan, setup and test air duct systems
- typical components of ventilation technology
- measure the flow rate and velocity of the air
- measure dynamic and static pressures
- determination of the pressure loss via different components: pipe bends, angles, distributors etc.
- recording of system characteristics
- recording of the fan characteristic
- determination of the operating point
- calculate the electric capacity of the fan motor with regard to current and voltage
- calculate the fan efficiency



HL 710
Air duct systems

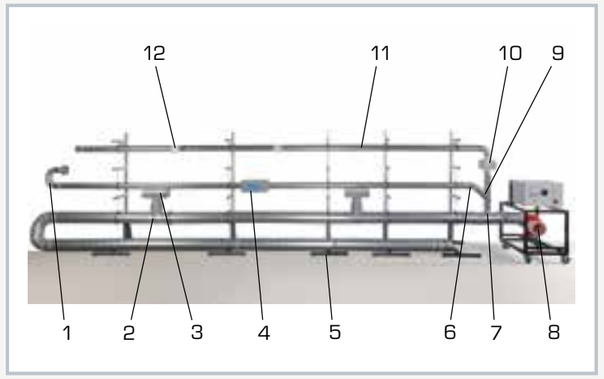


1 90° pipe bend, 2 reducer, 3 slotted outlet, 4 pocket filter, 5 assembly stand, 6 45° pipe bend, 7 T piece, 8 fan, 9 branch, 10 filter cartridge, 11 iris diaphragm, 12 disk valve

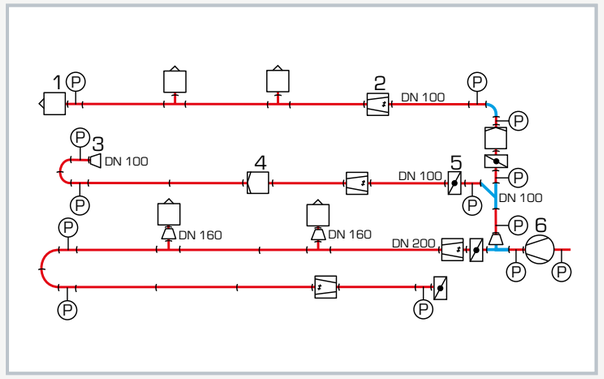


Pipe routing diagram: 1 inlet air or disk valve, 2 iris diaphragm, 3 reducer, 4 filter, 5 throttle valve, 6 fan; P pressure measuring point; blue: pipe bends and joints

1 fan speed adjustment, 2 fan on/off switch, 3 main switch, 4 power meter

### Specification

[1] experimental setup for training in ventilation engineering
[2] radial fan, on mobile frame, to connect air ducts
[3] air ducts from galvanised folded spiral-seam pipe with pipe bends, joints and components
[4] pressure measuring connections with variable locations
[5] 6 assembly stands to attach the air ducts
[6] inclined tube manometer and digital manometer for 2 different measuring ranges
[7] measuring of the air velocity by anemometer
[8] switch cabinet with display of power consumption

### Technical data

Fan
- power consumption: 900W
- max. volumetric flow rate: 1680m$^3$/h
- max. pressure difference: 1000Pa
- speed: 0...2840min$^{-1}$

Pipes
- length: 1600mm
- diameter: 8x DN200, 8x DN100

Pipe bends and connections, each DN100 and DN200
- 90° pipe bend, 45° pipe bend
- 45° branch
- T piece, T piece with reducer
- reducer, plug-in connection, pipe coupling

Flow restriction elements, each DN100 and DN200
- throttle valve
- iris diaphragm

Filters, each DN100 and DN200
- pocket filter
- filter cartridge

Measuring ranges
- pressure: 0...200Pa / 0...2000Pa
- velocity: 0,25...30m/s
- power: 0...5,75kW

230V, 50Hz, 1 phase
230V, 60Hz, 1 phase; 120V, 60Hz, 1 phase
LxWxH: 800x810x1250mm (fan)
Weight: approx. 180kg (total)

### Scope of delivery

1 radial fan on mobile frame
6 assembly stands
1 set of pipes, pipe bends, connections, components (outlets, filters etc.)
1 inclined tube manometer
1 digital manometer
1 anemometer
1 set of instructional material

# ST 510 Sanitation fittings training panel

## Sewerage technology at a glance with ST 510 by GUNT

- transparent components made of glass and PMMA for perfect observation of flow conditions
- direct comparison of correct and false arrangement of pipes
- ventilation and deairing adjustable with solenoid valves
- convenient flushing by remote control
- pressure distribution in pipework
- closed water circuit with storage tank and pump

Installation of system at customer's site

Observing the flow

**Correct** installation of waste water pipes in buildings is important for trouble-free operation of the sewerage system.

Poor pipe arrangement and incorrect selection of pipe diameters can cause pressure extremes, which may complicate or prevent waste water flow.

In addition, blockages and annoying odours and noise may occur.

Adequate ventilation of the piping under all flow conditions is essential for correct functioning.

## Functions of odour traps

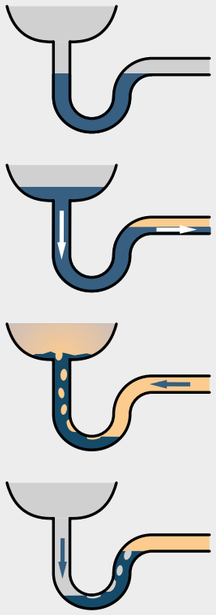

inactive odour trap

normal outflow through odour trap

pressure on sewerage side too high, odour trap ineffective

pressure on sewerage side too low, odour trap sucked empty

Flushing tanks and odour traps

## Flow conditions at different junctions at downcomers

Pipes and valves and fittings made of glass

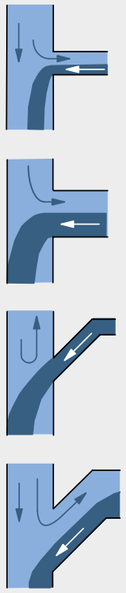

**correct**
all pipe parts ventilated

**incorrect**
lower downcomer not ventilated

**incorrect**
lower downcomer and inlet not ventilated

**correct**
all pipe parts ventilated

# ST 510
## Full-scale sewerage system

### Description

- **transparent pipes and tanks for observation of flow processes**
- **closed water circuit**

The routing of sewers is particularly important in wastewater engineering. Pipe inclinations, pipe inlets and outlet, reducers and cross-sections must be considered when designing systems, taking into account interactions between the components. In particular, the pressure distribution in complex pipe systems places high demands on design engineers. Design errors lead to noise, empty drain traps and clogged pipes.

ST 510 allows a variety of experiments in the field of wastewater engineering and enables the visualisation of flow processes in sewers.

The experimental plant includes an extensive drainage pipe system based on common real-world elements.

The pipes are transparent to allow visualisation of the flow processes. The cisterns are located in the top part of the experimental plant. These are opened or closed individually via solenoid valves. In addition, the bypass, ventilation pipe and pressure flushing are equipped with solenoid valves. The solenoid valves are triggered via a remote control. The system can be used to study the flow and pressure curve at different types of junctions, pipe offsets, cross-sectional changes and drain traps under different ventilation and evacuation conditions. The system contains a closed water circuit with collection tank and pump.

There are pressure measuring points located along the downcomer to measure the pressure conditions in the wastewater system. The measuring points are connected to a tube manometer via hose connections. The flow rate is determined via a rotameter.

### Learning objectives/experiments

- pressure curve in the downcomer
- bypass
- incorrect flow behaviour with defective ventilation of the pipes
- incorrect flow behaviour with incorrect pipe sizing
- flow at pipe offset
- suction effect at junctions
- behaviour of sanitary valves and fittings
- function of various drainage pipes



# ST 510
## Full-scale sewerage system

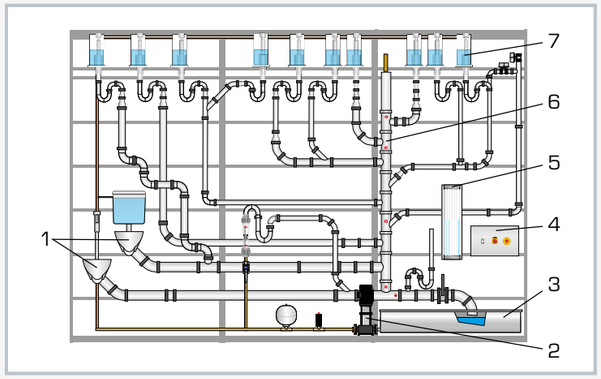


1 toilet bowl, 2 pump, 3 tank, 4 switch cabinet, 5 tube manometer, 6 downcomer with pressure measuring points, 7 cistern

1 toilet bowl pressure flush, 2 toilet bowl with cistern, 3 transparent pipes

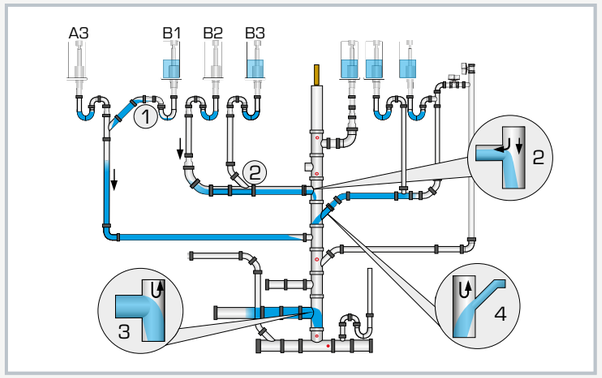


1 incorrect: drain trap B1 emptied through Y-piece when flushing A3, 2 correct: drain trap B3 not emptied by cross-sectional expansion and good ventilation when flushing B2, 3 ventilation failure due to equal pipe cross-sections, 4 ventilation failure due to high flow velocity

### Specification

[1] experimental plant for demonstration of wastewater technology
[2] transparent glass pipes and tanks
[3] 10 cisterns with remotely-operated solenoid valves
[4] 1 toilet with cistern
[5] 1 toilet with pressure flush
[6] contains downcomer, collection pipe, ventilation pipe and bypasses
[7] 6 tube manometers to indicate the pressure curve in the downcomer
[8] measurement of flow rate via rotameter

### Technical data

Pump
- power consumption: 550W
- max. flow rate: 4,5m$^3$/h
- max. head: 42,6m

Collection tank
- volume: approx. 300L

Transparent cisterns
- 4x 20L
- 6x 10L

Cistern
- 1x 9L

Flush for toilet: max. 9L

Measuring ranges
- flow rate: 0,4...4L/h
- pressure: 6x 1500mmWC

230V, 50Hz, 1 phase
230V, 60Hz, 1 phase
120V, 60Hz, 1 phase
UL/CSA optional
LxWxH: 5700x800x3900mm
Weight: approx. 1100kg

### Required for operation

compressed air connection: 6...10bar

### Scope of delivery

1 experimental plant
1 set of hoses
2 remote controls
1 set of instructional material

# The complete GUNT programme – equipment for engineering education

## 1 Engineering mechanics and engineering design

- statics
- strength of materials
- dynamics
- machine dynamics
- engineering design
- materials testing

## 2 Mechatronics

- engineering drawing
- cutaway models
- dimensional metrology
- fasteners and machine parts
- manufacturing engineering
- assembly projects
- maintenance
- machinery diagnosis
- automation and process control engineering

## 3 Thermal engineering

- fundamentals of thermodynamics
- thermodynamic applications in HVAC
- renewable energies
- thermal fluid energy machines
- refrigeration and air conditioning technology

## 4 Fluid mechanics

- steady flow
- transient flow
- flow around bodies
- fluid machinery
- components in piping systems and plant design
- hydraulic engineering

## 5 Process engineering

- mechanical process engineering
- thermal process engineering
- chemical process engineering
- biological process engineering
- water treatment

## 6 2E Energy & environment

**Energy**

- solar energy
- hydropower and ocean energy
- wind power
- biomass
- geothermal energy
- energy systems
- energy efficiency in building service engineering

**Environment**

- water
- air
- soil
- waste

Planning and consulting · Technical service
Commissioning and training

# Index


| Keyword | Code (page) |
|---|---|
| **0...9** | |
| 3-hole probe | HM 215 (390) HM 405 (290/386) |
| **A** | |
| action force, flowing fluid | HM 260 (140) |
| action turbine | HM 291 (276) |
| aerofoil | HM 170 (210) HM 225.04 (230) HM 225.08 (234) HM 226 (220) |
| air duct | HL 710 (394) |
| air flow, incompressible | HM 220 (106) HM 225 (116/226) |
| air flow, subsonic | HM 230 (132) |
| air flow, transonic | HM 230 (132) |
| air vessel | HM 150.15 (252) |
| alignement of pump and motor | HL 960.01 (354) HL 962 (372) |
| alignment of drives | HL 960.01 (354) |
| alignment of pumps | HL 960.01 (354) HL 962 (372) |
| angle seat valve | MT 156 (328) |
| apparent force | TM 605 (38) |
| areometer | HM 115 (22) HM 135 (68) |
| assembly, maintenance and repair | HL 960.01 (354) MT 154 (324) MT 156 (328) MT 157 (326) MT 158 (330) MT 180 (336) MT 181 (338) MT 182 (348) MT 183 (344) MT 184 (342) MT 185 (340) MT 186 (346) |
| axial flow fan | HM 215 (390) |
| axial turbine | HM 287 (270) |
| axial-flow turbomachine | HM 405 (290/386) |
| **B** | |
| ball valve | MT 158 (330) RT 396 (172) |
| Bernoulli's principle | HM 150.07 (34) HM 220.01 (108) HM 225.03 (118) |
| bimetallic thermometer | WL 202 (10) |
| blade | HM 215 (390) |
| blade shape | HM 405 (290/386) |
| boiling point, water | WL 204 (18) |
| boundary layer | HM 170.24 (214) HM 220.02 (110) HM 225.02 (228) |
| Bourdon tube pressure gauge | HM 150.02 (14) WL 203 (12) |
| Boyle-Mariotte's law | HM 115 (22) WL 102 (16) |
| broad-crested weir | HM 150.21 (74) HM 160 (80) HM 164 (76) HM 241 (56/102) |
| bulk solid | CE 220 (236) |
| buoyancy force | HM 115 (22) HM 135 (68) |
| buoyancy, bodies at rest | HM 115 (22) HM 150.06 (26) HM 150.39 (28) |
| butterfly valve | MT 157 (326) |

| Keyword | Code (page) |
|---|---|
| **C** | |
| calibration, flow meter | HM 500 (176) |
| calibration, pressure gauges | HM 150.02 (14) |
| canned motor pump | HL 962.02 (375) |
| capillarity | HM 115 (22) |
| Carman-Kozeny equation | CE 220 (236) |
| cavitation | HM 283 (298) HM 380 (180) HM 405 (290/386) ST 250 (182) |
| centre of area | HM 150.05 (24) |
| centre of buoyancy | HM 150.06 (26) HM 150.39 (28) |
| centre of gravity | HM 150.06 (26) |
| centre of pressure | HM 115 (22) HM 150.05 (24) |
| centrifugal pump | HM 124 (368) HM 150.04 (62) HM 283 (298) HM 284 (300) HM 290 (278) HM 299 (294) HM 300 (302) HM 332 (304) HM 362 (382) HM 380 (180) HM 405 (290/386) HM 450C (282) RT 396 (172) |
| centrifugal pump (assembly & maintenance) | MT 180 (336) MT 181 (338) MT 185 (340) |
| change of state, gases | WL 102 (16) |
| change of state, isochoric | WL 102 (16) |
| change of state, isothermal | WL 102 (16) |
| changes in cross-section, flow thrugh | HM 150.10 (66) HM 153 (192) |
| channel, closed | HM 164 (76) |
| channel, open | HM 150.03 (72) HM 150.21 (74) HM 160 (80) HM 164 (76) |
| characteristic, compressor | HM 299 (294) |
| characteristic, fan | HL 710 (394) HM 215 (390) HM 240 (92) |
| characteristic, pump | HL 962 (372) HM 150.04 (62) HM 150.16 (64) HM 241 (56/102) HM 283 (298) HM 284 (300) HM 285 (308) HM 286 (310) HM 299 (294) HM 300 (302) HM 332 (304) HM 362 (382) HM 405 (290/386) HM 450C (282) RT 396 (172) |
| characteristic, valve | HM 120 (148) RT 390 (170) RT 396 (172) |
| choking effect | HM 260 (140) HM 261 (142) |
| closed channel | HM 164 (76) |
| closed circular pipeline, pipe network | HM 111 (156) |
| Coanda effect | HM 225.06 (232) |
| communicating vessels | HM 115 (22) |
| compressible fluids | HM 230 (132) |
| compressor characteristic | HM 299 (294) |
| continuity equation | HM 150.07 (34) HM 220.01 (108) HM 225.03 (118) HM 230 (132) |
| contraction coefficient | HM 150.09 (40) HM 150.12 (42) |
| contraction in cross-section | HL 210 (166) HM 112 (150) HM 120 (148) HM 122 (154) HM 150.11 (50) HM 150.29 (48) HM 241 (56/102) |
| control valve | HM 124 (368) RT 390 (170) RT 396 (172) |
| convergent pipe flow | HM 150.07 (34) |
| convergent/divergent nozzle | HM 230 (132) HM 260 (140) HM 261 (142) |
| cooling curve of a cylinder immersed to a flow | HM 240.06 (100) |
| Coriolis force | TM 605 (38) |
| critical point, water | WL 204 (18) |
| critical pressure ratio | HM 172 (138) HM 230 (132) HM 260 (140) HM 261 (142) |
| critical Reynolds number | HM 150.01 (46) HM 150.18 (32) |
| curve, turbine | HM 287 (270) HM 288 (272) HM 289 (274) HM 291 (276) HM 405 (290/386) HM 450.01 (284) HM 450.02 (286) |
| cutaway models | HM 700.01-HM 700.22 (333) VS 101-VS 109 (336-337) |

| Keyword | Code (page) |
|---|---|
| **D** | |
| de Laval nozzle | HM 230 (132) HM 261 (142) |
| density of liquids | HM 115 (22) HM 135 (68) |
| determining pipe friction factor | HM 112 (150) HM 120 (148) HM 122 (154) HM 150.01 (46) HM 150.11 (50) HM 150.29 (48) |
| diaphragm pump | MT 183 (344) |
| dipole, demonstration | HM 152 (190) |
| dirt trap | RT 396 (172) |
| discharge at the weir, theoretical | HM 150.03 (72) |
| discharge coefficient | HM 150.03 (72) HM 160 (80) |
| discharge determination on a weir | HM 150.03 (72) |
| displacement pump | HM 285 (308) HM 286 (310) HM 299 (294) HM 362 (382) MT 182 (348) MT 183 (344) MT 184 (342) |
| divergent pipe flow | HM 150.07 (34) |
| downpipe, sewerage | ST 510 (398) |
| drag bodies, immersed flow | HM 150.10 (66) HM 150.21 (74) HM 153 (192) HM 170 (210) HM 172 (138) HM 225.04 (230) |
| drag coefficient | HM 170 (210) HM 170.28 (216) HM 225.04 (230) HM 240.03 (94) HM 240.04 (96) |
| drag coefficient of bodies | HM 170.28 (216) HM 225.04 (230) HM 240.04 (96) |
| drag force of bodies immersed in a flow | HM 225.04 (230) |
| drainage processes, transient | HM 143 (250) |
| **E** | |
| eddy current brake | HM 287 (270) HM 288 (272) HM 289 (274) HM 291 (276) |
| efficiency, fan | HL 710 (394) HM 240 (92) |
| efficiency, nozzle | HM 260 (140) |
| efficiency, pump | HM 150.04 (62) HM 283 (298) HM 284 (300) HM 285 (308) HM 286 (310) HM 332 (304) HM 362 (382) HM 450C (282) |
| efficiency, turbine | HM 150.19 (58) HM 287 (270) HM 288 (272) HM 289 (274) HM 291 (276) HM 450.01 (284) HM 450.02 (286) |
| enlargement in cross-section | HL 210 (166) HM 112 (150) HM 120 (148) HM 122 (154) HM 150.11 (50) HM 150.29 (48) HM 241 (56/102) |
| Ergun equation | CE 220 (236) |
| experimental flume | HM 150.21 (74) HM 160 (80) HM 164 (76) HM 241 (56/102) |

| Keyword | Code (page) |
|---|---|
| **F** | |
| fan characteristic | HL 710 (394) HM 215 (390) HM 240 (92) |
| fan efficiency | HL 710 (394) HM 240 (92) |
| fans connected in series | HM 215 (390) |
| flooding point | HM 136 (238) |
| floting body | HM 150.39 (28) |
| flow around bodies | HM 133 (194) HM 150.10 (66) HM 152 (190) HM 153 (192) HM 170 (210) HM 225 (116/226) HM 225.04 (230) HM 225.08 (234) HM 226 (220) |
| flow coefficient | HM 150.07 (34) HM 150.13 (52) |
| flow in an open channel | HM 150.21 (74) HM 160 (80) |
| flow measurement | HM 150.11 (50) HM 150.13 (52) HM 122 (154) HM 500 (176) |
| flow separation | HM 132 (200) HM 133 (194) HM 152 (190) HM 170.22 (212) HM 170.28 (216) HM 225.05 (120) HM 225.08 (234) HM 226 (220) HM 240.04 (96) |
| flow straightener | HM 132 (200) HM 133 (194) HM 150.21 (74) HM 153 (192) HM 170 (210) HM 172 (138) HM 215 (390) HM 225 (116/226) HM 225.08 (234) HM 226 (220) |
| flow through | HM 132 (200) HM 133 (194) HM 150.10 (66) HM 152 (190) HM 153 (192) HM 225.08 (234) HM 226 (220) |
| flow, laminar/turbulent | HM 150.01 (46) HM 150.18 (32) |
| flow, two-dimensional | HM 132 (200) HM 133 (194) HM 150.10 (66) HM 152 (190) |
| flow, vertical | HM 150.12 (42) |
| flow-measuring flume | HM 160 (80) |
| fluidisation | CE 220 (236) |
| fluidisation velocity | CE 220 (236) |
| fluidised bed | CE 220 (236) |
| fluids, compressible | HM 230 (132) |
| fluttering vibrations | HM 170 (210) |
| fog generator | HM 170.52 (218) HM 225.08 (234) HM 226 (220) |
| forced vortices | HM 150.14 (44) |
| Francis turbine | HM 150.20 (60) HM 450.02 (286) |
| free jet | HM 150.12 (42) HM 220 (106) HM 225.07 (122) |
| free overfall | HM 150.03 (72) HM 160 (80) |
| free vortices | HM 150.14 (44) |
| free-jet turbine | HM 150.19 (58) HM 289 (274) HM 450.01 (284) |
| **G** | |
| gas pressure thermometer | WL 202 (10) |
| gate | HM 160 (80) HM 164 (76) |
| gate valve | RT 396 (172) |
| Gay-Lussac's law | WL 102 (16) |
| gear pump | HM 286 (310) MT 186 (346) |
| ground pressure measurement | HM 115 (22) |
| guide vane | HM 215 (390) HM 287 (270) HM 405 (290/386) HM 450.02 (286) |

# Index


| Keyword | Code (page) |
|---|---|
| **H** | |
| hard chine, floating bodies | HM 150.39 (28) |
| heat transfer coefficient | HM 240.06 (100) |
| heat transfer, cylindre in traverse flow | HM 240.06 (100) |
| heel | HM 150.06 (26) HM 150.39 (28) |
| Hele-Shaw cell | HM 152 (190) |
| horizontal flow | HM 150.09 (40) |
| hydraulic jump | HM 160 (80) HM 164 (76) |
| hydraulic ram | HM 150.15 (252) |
| hydrogen bubbles, electrolytically generated | HM 132 (200) HM 133 (194) |
| hydrostatic pressure | HM 115 (22) HM 150.05 (24) |
| **I** | |
| impact force | HM 260 (140) |
| impeller pump | HM 299 (294) |
| impulse turbine | HM 150.19 (58) HM 291 (276) HM 450.01 (284) |
| inclined tube manometer | WL 203 (12) |
| inertial force | TM 605 (38) |
| in-line centrifugal pump | MT 185 (340) |
| installation and removal of pumps | HL 962 (372) |
| installation technology | HL 102 (160) HL 103 (162) HL 111 (168) HL 113 (164) HL 210 (166) |
| iris diaphragm | HL 710 (394) HM 220 (106) |
| isochoric/isothermal change of state of gases | WL 102 (16) |
| **J** | |
| jet forces | HM 150.18 (32) |
| **K** | |
| Karman vortices | HM 132 (200) HM 133 (194) |
| $K_v$ value | HM 124 (368) RT 390 (170) |
| $K_{vs}$ value | RT 390 (170) RT 396 (172) |
| **L** | |
| laminar flow | HM 150.01 (46) HM 150.10 (66) |
| Laplace equation | HM 152 (190) |
| leak testing, valves and fittings | HL 962 (372) MT 162 (332) |
| lift coefficient | HM 170 (210) |
| lift force | HM 170.22 (212) |
| lift, aerfoils | HM 170 (210) HM 170.22 (212) |
| loading point, packed column | HM 136 (238) |
| logic elements, pneumatic | HM 225.06 (232) |

| Keyword | Code (page) |
|---|---|
| **M** | |
| Mach line | HM 172 (138) |
| Mach number | HM 172 (138) |
| manometer, piston | HM 150.02 (14) |
| manometer, U-tube | WL 203 (12) |
| measurement method, flow rate | HM 500 (176) |
| measurement method, pressure | HM 115 (22) WL 203 (12) |
| measurement method, temperature | WL 202 (10) |
| measuring nozzle | HM 150.11 (50) HM 150.13 (52) HM 230 (132) |
| measuring weir | HM 150.03 (72) |
| mechanical power | HM 288 (272) HM 289 (274) HM 291 (276) HM 450C (282) HM 450.01 (284) HM 450.02 (286) |
| metacentre | HM 150.06 (26) HM 150.39 (28) |
| **N** | |
| needle nozzle, Pelton turbine | HM 150.19 (58) HM 289 (274) HM 450.01 (284) |
| non-return valve | HM 110.01 (152) HM 112 (150) MT 157 (326) |
| nozzle efficiency | HM 260 (140) |
| nozzle flow | HM 260 (140) |
| nozzle, convergent/divergent | HM 230 (132) HM 260 (140) HM 261 (142) |
| NPSH value | HM 124 (368) |
| **O** | |
| Ogee-crested weir | HM 160 (80) HM 164 (76) |
| open channel | HM 150.03 (72) HM 150.21 (74) HM 160 (80) HM 164 (76) |
| opening characteristic of shut-off valves and fittings | HM 110.01 (152) HM 112 (150) HM 122 (154) HM 150.11 (50) |
| operating point | HL 710 (394) HM 299 (294) HM 300 (302) |
| orifice plate | HM 150.11 (50) HM 150.13 (52) |
| Osborne Reynolds experiment | HM 150.18 (32) |
| oscillations, surge chamber | HM 143 (250) HM 156 (248) |
| overfall, free | HM 150.03 (72) HM 160 (80) |

| Keyword | Code (page) |
|---|---|
| **P** | |
| packed column | HM 136 (238) |
| parallel flow | HM 152 (190) |
| Pascal's law | HM 115 (22) |
| Pelton turbine | HM 150.19 (58) HM 289 (274) HM 450.01 (284) |
| performance curves | HM 290 (278) |
| pipe flow, convergent | HM 150.07 (34) |
| pipe network | HM 111 (156) |
| pipe sections connected in parallel | HM 111 (156) |
| pipe sections connected in series | HM 111 (156) |
| piping system | HL 960 (352) HL 962 (372) HM 111 (156) HM 124 (368) |
| piston compressor | HM 299 (294) |
| piston manometer | HM 150.02 (14) |
| piston pump | HM 285 (308) HM 286 (310) HM 299 (294) HM 362 (382) MT 182 (348) MT 183 (344) MT 184 (342) |
| PIV, particle image velocimetry/ particle tracking velocimetry | HM 132 (200) |
| plate weir | HM 150.03 (72) |
| potential flow | HM 150.10 (66) HM 152 (190) |
| power, mechanical | HM 288 (272) HM 289 (274) HM 291 (276) HM 450C (282) HM 450.01 (284) HM 450.02 (286) |
| pressure curve, Laval nozzle | HM 172 (138) |
| pressure curve, Venturi nozzle | HM 150.07 (34) HM 220.01 (108) |
| pressure distribution, cylinder immersed in a flow | HM 225.04 (230) HM 240.04 (96) |
| pressure distribution, liquid at rest | HM 150.05 (24) |
| pressure gauges, calibration | HM 150.02 (14) |
| pressure oscillation | HM 156 (248) |
| pressure ratio, critical | HM 172 (138) HM 230 (132) HM 260 (140) HM 261 (142) |
| pressure testing of valves and fittings | MT 162 (332) |
| pressure, hydrostatic | HM 115 (22) HM 150.05 (24) |
| pressure, measurement method | HM 115 (22) WL 203 (12) |
| principle of linear momentum | HM 150.08 (36) |
| psychrometer | WL 202 (10) |
| pulsation damping | HM 285 (308) |
| pump characteristic | HL 962 (372) HM 150.04 (62) HM 150.16 (64) HM 241 (56/102) HM 283 (298) HM 284 (300) HM 285 (308) HM 286 (310) HM 299 (294) HM 300 (302) HM 332 (304) HM 362 (382) HM 405 (290/386) HM 450C (282) RT 396 (172) |
| pump efficiency | HM 150.04 (62) HM 283 (298) HM 284 (300) HM 285 (308) HM 286 (310) HM 332 (304) HM 362 (382) HM 450C (282) |
| pump, assembly and repair | HL 962 (372) MT 180 (336) MT 181 (338) MT 182 (348) MT 183 (344) MT 184 (342) MT 185 (340) MT 186 (346) |

| Keyword | Code (page) |
|---|---|
| pump, canned motor | HL 962.02 (375) |
| pump, in-line centrifugal | MT 185 (340) |
| pump, piston | HM 285 (308) HM 299 (294) HM 362 (382) MT 184 (342) |
| pump, positive displacement | HM 285 (308) HM 286 (310) HM 299 (294) HM 362 (382) MT 182 (348) MT 183 (344) MT 184 (342) |
| pump, rotary-type positive displacement | HM 286 (310) |
| pump, screw | MT 182 (348) |
| pump, series and parallel connected | HM 150.16 (64) HM 284 (300) HM 299 (294) HM 332 (304) HM 362 (382) |
| pump, side channel | HL 962.03 (376) HM 362 (382) |
| pumps connected in parallel | HM 124 (368) HM 150.16 (64) HM 284 (300) HM 299 (294) HM 332 (304) HM 362 (382) |
| pumps connected in series | HM 150.16 (64) HM 284 (300) HM 299 (294) HM 332 (304) HM 362 (382) |
| pumps test stand | RT 396 (172) |
| pumps, comparison | HL 962 (372) HM 299 (294) HM 362 (382) |
| p-V diagram | HM 285 (308) |
| **R** | |
| radial fan | HM 240 (92) |
| rainwater retention basin | HM 143 (250) |
| Rankine half-bodies | HM 152 (190) |
| reaction force, flowing fluid | HM 260 (140) |
| reaction principle | HM 288 (272) |
| reaction turbine | HM 288 (272) |
| reflection time | HM 155 (246) |
| Rehbock weir | HM 150.13 (52) |
| resistance coefficient, pipe elements | HM 112 (150) HL 113 (164) HM 120 (148) HM 122 (154) HM 150.11 (50) |
| resistance temperature detector | WL 202 (10) |
| Reynolds number | HM 150.01 (46) HM 150.18 (32) HM 170.28 (216) |
| Reynolds number, critical | HM 150.01 (46) HM 150.18 (32) |
| rotameter | HM 150.13 (52) |
| rotary vane compressor | HM 299 (294) |
| rotary-type positive displacement pump | HM 286 (310) |
| rotating reference system | TM 605 (38) |
| rotor | HM 288 (272) HM 289 (274) HM 291 (276) |
| rotor blade, turbine | HM 450.02 (286) |
| round bilge, floating bodies | HM 150.39 (28) |

# Index


| Keyword | Code (page) |
|---|---|
| **S** | |
| **safety valve** | RT 396 (172) |
| **sanitary technology** | ST 510 (398) |
| **sanitary valves and fittings** | ST 510 (398) |
| **saturated vapour** | WL 204 (18) |
| **Schlieren optics** | HM 172 (138) |
| **screw pump** | MT 182 (348) |
| **secondary flow, pipe bend** | HM 225.05 (120) |
| **separation in a pipe bend** | HM 225.05 (120) |
| **setting velocity** | HM 135 (68) |
| **sewer** | ST 510 (398) |
| **sewerage system** | ST 510 (398) |
| **sharp-crested weir** | HM 150.03 (72) HM 150.21 (74)<br>HM 160 (80) HM 241 (56/102) |
| **shock front** | HM 172 (138) |
| **shock wave** | HM 172 (138) HM 230 (132)<br>HM 261 (142) |
| **shut-off butterfly valve** | RT 396 (172) |
| **shut-off valve** | MT 154 (324) MT 158 (330) |
| **shut-off valves and fittings** | HL 113 (164) HL 960 (352)<br>HM 110.01 (152) HM 112 (150)<br>HM 120 (148) HM 150.11 (50)<br>MT 154 (324) MT 156 (328)<br>MT 157 (326) MT 158 (330) |
| **side channel pump** | HL 962.03 (376) HM 362 (382) |
| **sill** | HM 164 (76) |
| **sinks and sources** | HM 150.10 (66) HM 152 (190) |
| **sluice gate** | HM 150.21 (74) |
| **sources and sinks** | HM 150.10 (66) HM 152 (190) |
| **speed of sound in air** | HM 230 (132) |
| **stability, floating bodies** | HM 150.06 (26) HM 150.39 (28) |
| **stall** | HM 225.08 (234) HM 226 (220) |
| **stator** | HM 287 (270) |
| **steady incompressible, air flow** | HM 220 (106) HM 225 (116/226) |
| **streamlines, visualisation** | HM 132 (200) HM 133 (194)<br>HM 150.10 (66) HM 150.21 (74)<br>HM 152 (190) HM 153 (192)<br>HM 170 (210) HM 225.08 (234)<br>HM 226 (220) |
| **subsonic air flow** | HM 230 (132) |
| **subsonic diffuser** | HM 172 (138) |
| **subsonic nozzle** | HM 172 (138) |
| **supersonic diffuser** | HM 172 (138) |
| **supersonic flow** | HM 172 (138) HM 230 (132) |
| **supersonic nozzle** | HM 172 (138) |
| **supersonic wind tunnel** | HM 172 (138) |
| **surface tensions** | HM 115 (22) |
| **surge chamber** | HM 143 (250) HM 156 (248) |
| **system characteristics** | HL 710 (394) HM 220 (106)<br>HM 284 (300) HM 299 (294)<br>HM 332 (304) HM 362 (382) |

| Keyword | Code (page) |
|---|---|
| **T** | |
| **temperature measuring strips** | WL 202 (10) |
| **temperature, measurement method** | WL 202 (10) |
| **temperature-pressure diagram** | WL 204 (18) |
| **test stand, pumps** | RT 396 (172) |
| **test stand, valves and fittings** | MT 162 (332) RT 396 (172) |
| **theoretical discharge at the weir** | HM 150.03 (72) |
| **thermistor** | WL 202 (10) |
| **thermocouple** | WL 202 (10) |
| **Thomson weir** | HM 150.03 (72) |
| **thrust** | HM 260 (140) |
| **trajectory** | HM 150.09 (40) |
| **transient drainage processes** | HM 143 (250) |
| **transonic air flow** | HM 230 (132) |
| **triple point, water** | WL 204 (18) |
| **turbine curve** | HM 287 (270) HM 288 (272)<br>HM 289 (274) HM 291 (276)<br>HM 405 (290/386)<br>HM 450.01 (284) HM 450.02 (286) |
| **turbine efficiency** | HM 150.19 (58) HM 287 (270)<br>HM 288 (272) HM 289 (274)<br>HM 291 (276) HM 450.01 (284)<br>HM 450.02 (286) |
| **turbine, free jet** | HM 150.19 (58) HM 289 (274)<br>HM 450.01 (284) |
| **turbine, impulse** | HM 289 (274) HM 291 (276)<br>HM 450.01 (284) |
| **turbine, Pelton** | HM 150.19 (58) HM 289 (274)<br>HM 450.01 (284) |
| **turbine, reaction** | HM 150.20 (60) HM 287 (270)<br>HM 288 (272) HM 450.02 (286) |
| **turbine,Francis** | HM 150.20 (60) HM 450.02 (286) |
| **turbomachine, axial flow** | HM 405 (290/386) |
| **two-dimensional flow** | HM 132 (200) HM 133 (194)<br>HM 150.10 (66) HM 152 (190) |
| **U** | |
| **U-tube manometer** | WL 203 (12) |

| Keyword | Code (page) |
|---|---|
| **V** | |
| **valve characteristic** | HM 120 (148)<br>RT 390 (170)<br>RT 396 (172) |
| **valve, angle seat** | HM 110.01 (152)<br>HM 112 (150) |
| **valve, control** | HM 124 (368) RT 390 (170)<br>RT 396 (172) |
| **valve, electro-pneumatic** | RT 390 (170) |
| **valve, non-return** | HM 110.01 (152) HM 112 (150)<br>MT 157 (326) |
| **valve, safety** | RT 396 (172) |
| **valves and fittings test stand** | MT 162 (332) RT 396 (172) |
| **valves and fittings, sanitary** | ST 510 (398) |
| **vapour pressure curve of water** | WL 204 (18) |
| **velocity of sound in water** | HM 155 (246) HM 156 (248) |
| **velocity profile, free jet** | HM 225.07 (122) |
| **velocity triangles** | HM 405 (290/386)<br>HM 450.02 (286) |
| **ventilation technology** | HL 710 (394) |
| **Venturi nozzle** | HM 112 (150) HM 150.07 (34)<br>HM 150.11 (50) HM 150.13 (52)<br>HM 220.01 (108) |
| **vertical flow** | HM 150.12 (42) |
| **viscosity** | HM 135 (68) |
| **volumetric flow, determination** | HM 230 (132) |
| **vortex** | HM 150.14 (44) |
| **vortex formation** | HM 132 (200) HM 133 (194)<br>HM 150.14 (44)<br>HM 150.21 (74)<br>HM 153 (192) HM 170.28 (216)<br>HM 225.05 (120)<br>HM 225.08 (234)<br>HM 226 (220) |
| **vortex, forced** | HM 150.14 (44) |
| **vortex, free** | HM 150.14 (44) |

| Keyword | Code (page) |
|---|---|
| **W** | |
| **wake depression, cylinder** | HM 170.28 (216) HM 225.04 (230)<br>HM 240.04 (96) |
| **wall effect, packed column** | HM 136 (238) |
| **water hammer** | HM 150.15 (252) HM 155 (246)<br>HM 156 (248) |
| **wedge gate valve** | MT 156 (328) MT 162 (332)<br>RT 396 (172) |
| **weir outlet, ski jump spillway** | HM 160 (80) HM 164 (76) |
| **weir, broad-crested** | HM 150.21 (74) HM 160 (80)<br>HM 164 (76) HM 241 (56/102) |
| **weir, incident flow** | HM 153 (192) |
| **weir, Ogee-crested** | HM 160 (80) HM 164 (76) |
| **weir, sharp-crested** | HM 150.03 (72) HM 150.21 (74)<br>HM 160 (80) HM 241 (56/102) |
| **wind tunnel** | HM 226 (220) |
| **wind tunnel, “Eiffel” type** | HM 170 (210) HM 172 (138) |

# Product overview


| CE | | |
|---|---|---|
| CE 220 | Fluidised bed formation | 236 |

| HL | | |
|---|---|---|
| HL 102 | Installation technology: losses in different pipes | 160 |
| HL 103 | Installation technology: losses in pipe bends | 162 |
| HL 111 | Installation technology: losses in straight pipes | 168 |
| HL 113 | Installation technology: losses in valves and fittings | 164 |
| HL 210 | Installation technology: losses in a pipe system | 166 |
| HL 710 | Air duct systems | 394 |
| HL 960 | Assembly station: pipes and valves and fittings | 352 |
| HL 960.01 | Assembly and alignment of pumps and drives | 354 |
| HL 962 | Assembly stand for pumps | 372 |
| HL 962.01 | Standard chemicals pump | 374 |
| HL 962.02 | Canned motor pump | 375 |
| HL 962.03 | Side channel pump | 376 |
| HL 962.04 | Standard chemicals pump with magnetic clutch | 377 |
| HL 962.30 | Tank system | 378 |

| HM | | |
|---|---|---|
| HM 110.01 | Set of measuring objects, brass | 152 |
| HM 111 | Pipe networks | 156 |
| HM 112 | Fluid mechanics trainer | 150 |
| HM 115 | Hydrostatics trainer | 022 |
| HM 120 | Losses in pipe elements | 148 |
| HM 122 | Pressure losses in pipes | 154 |
| HM 124 | Fluid mechanics experimental plant | 368 |
| HM 132 | Vertical visualisation of flow fields | 200 |
| HM 133 | Visualisation of flow fields | 194 |
| HM 135 | Determination of the settling velocity | 068 |
| HM 136 | Flow through packed columns | 238 |
| HM 143 | Transient drainage processes in storage reservoirs | 250 |
| HM 150 | Base module for experiments in fluid mechanics | 084 |
| HM 150 | Base module for experiments in fluid mechanics | 254 |
| HM 150.01 | Pipe friction for laminar / turbulent flow | 046 |
| HM 150.02 | Calibration of pressure gauges | 014 |
| HM 150.03 | Plate weirs for HM 150 | 072 |
| HM 150.04 | Centrifugal pump | 062 |
| HM 150.05 | Hydrostatic pressure in liquids | 024 |
| HM 150.06 | Stability of floating bodies | 026 |
| HM 150.07 | Bernoulli's principle | 034 |
| HM 150.08 | Measurement of jet forces | 036 |
| HM 150.09 | Horizontal flow from a tank | 040 |
| HM 150.10 | Visualisation of streamlines | 066 |
| HM 150.11 | Losses in a pipe system | 050 |
| HM 150.12 | Vertical flow from a tank | 042 |
| HM 150.13 | Methods of flow measurement | 052 |
| HM 150.14 | Vortex formation | 044 |
| HM 150.15 | Hydraulic ram – pumping using water hammer | 252 |
| HM 150.16 | Series and parallel configuration of pumps | 064 |
| HM 150.18 | Osborne Reynolds experiment | 032 |
| HM 150.19 | Operating principle of a Pelton turbine | 058 |
| HM 150.20 | Operating principle of a Francis turbine | 060 |
| HM 150.21 | Visualisation of streamlines in an open channel | 074 |
| HM 150.29 | Energy losses in piping elements | 048 |
| HM 150.39 | Floating bodies for HM 150.06 | 028 |
| HM 152 | Potential flow | 190 |
| HM 153 | Visualisation of different flows | 192 |
| HM 155 | Water hammer in pipes | 246 |
| HM 156 | Water hammer and surge chamber | 248 |
| HM 160 | Experimental flume 86 x 300 mm | 080 |
| HM 164 | Open channel and closed channel flow | 076 |
| HM 170 | Open wind tunnel | 210 |
| HM 170.22 | Pressure distribution on an aerofoil NACA 0015 | 212 |
| HM 170.24 | Boundary layer analysis with Pitot tube | 214 |
| HM 170.28 | Wake measurement | 216 |
| HM 170.52 | Fog generator | 218 |
| HM 170.60 | System for data acquisition | 219 |
| HM 172 | Supersonic wind tunnel with Schlieren optics | 138 |
| HM 215 | Two-stage axial fan | 390 |
| HM 220 | Air flow experimental plant | 106 |
| HM 220.01 | Venturi tube | 108 |
| HM 220.02 | Measurement of boundary layers | 110 |
| HM 225 | Aerodynamics trainer (steady flow) | 116 |
| HM 225 | Aerodynamics trainer (flow around bodies) | 226 |
| HM 225.02 | Boundary layers | 228 |
| HM 225.03 | Bernoulli's principle | 118 |
| HM 225.04 | Drag forces | 230 |
| HM 225.05 | Flow in a pipe bend | 120 |
| HM 225.06 | Coanda effect | 232 |
| HM 225.07 | Free jet | 122 |
| HM 225.08 | Visualisation of streamlines | 234 |
| HM 226 | Wind tunnel for visualisation of streamlines | 220 |
| HM 230 | Flow of compressible fluids | 132 |
| HM 240 | Principles of air flow | 092 |
| HM 240.03 | Electronic total pressure sensor | 094 |
| HM 240.04 | Pressure distribution on a cylinder | 096 |
| HM 240.05 | Pressure losses in pipe elements | 098 |
| HM 240.06 | Heat transfer at a cylinder in transverse flow | 100 |
| HM 241 | Fundamentals of water flow | 056 |
| HM 241 | Fundamentals of water flow (steady flow) | 102 |
| HM 260 | Characteristics of nozzles | 140 |
| HM 261 | Nozzle pressure distribution | 142 |
| HM 283 | Experiments with a centrifugal pump | 298 |
| HM 284 | Series and parallel configuration of pumps | 300 |
| HM 285 | Experiments with a piston pump | 308 |
| HM 286 | Experiments with a gear pump | 310 |
| HM 287 | Experiments with an axial turbine | 270 |
| HM 288 | Experiments with a reaction turbine | 272 |
| HM 289 | Experiments with a Pelton turbine | 274 |
| HM 290 | Base unit for turbines | 278 |
| HM 291 | Experiments with an action turbine | 276 |
| HM 299 | Comparison of positive displacement machines and turbomachines | 294 |
| HM 300 | Hydraulic circuit with centrifugal pump | 302 |
| HM 332 | Pump characteristics for parallel and series configuration | 304 |
| HM 362 | Comparison of pumps | 382 |
| HM 380 | Cavitation in pumps | 180 |
| HM 405 | Axial-flow turbomachines | 290 |
| HM 405 | Axial-flow turbomachines | 386 |
| HM 450.01 | Pelton turbine | 284 |
| HM 450.02 | Francis turbine | 286 |
| HM 450C | Characteristic variables of hydraulic turbomachines | 282 |
| HM 500 | Flow meter trainer | 176 |
| HM 700.01 | Cutaway model: standard orifice plate | 316 |
| HM 700.02 | Cutaway model: flow nozzle | 317 |
| HM 700.03 | Cutaway model: standard Venturi meter | 317 |
| HM 700.04 | Cutaway model: straight-way valve | 317 |
| HM 700.05 | Cutaway model: corner valve | 317 |
| HM 700.06 | Cutaway model: angle seat valve | 317 |
| HM 700.07 | Cutaway model: non-return valve | 317 |
| HM 700.08 | Cutaway model: pressure reducing valve | 317 |
| HM 700.09 | Cutaway model: strainer | 317 |
| HM 700.10 | Cutaway model: gate valve | 318 |
| HM 700.11 | Cutaway model: straight-way plug valve | 318 |
| HM 700.12 | Cutaway model: three-way plug valve | 318 |
| HM 700.13 | Cutaway model: ball valve | 318 |
| HM 700.14 | Cutaway model: safety valve | 318 |
| HM 700.15 | Cutaway models: various screwed pipe connections | 318 |
| HM 700.16 | Cutaway models: pressure gauges | 318 |
| HM 700.17 | Cutaway model: centrifugal pump | 319 |
| HM 700.20 | Cutaway model: piston pump | 319 |
| HM 700.22 | Cutaway model: gear pump | 319 |

| MT | | |
|---|---|---|
| MT 154 | Assembly exercise: shut-off valve | 324 |
| MT 156 | Assembly exercise: wedge gate valve and angle seat valve | 328 |
| MT 157 | Assembly exercise: butterfly valve and non-return valve | 326 |
| MT 158 | Assembly exercise: ball valve and shut-off valve | 330 |
| MT 162 | Hydraulic valves and fittings test stand | 332 |
| MT 180 | Assembly & maintenance exercise: centrifugal pump | 336 |
| MT 181 | Assembly & maintenance exercise: multistage centrifugal pump | 338 |
| MT 182 | Assembly & maintenance exercise: screw pump | 348 |
| MT 183 | Assembly & maintenance exercise: diaphragm pump | 344 |
| MT 184 | Assembly & maintenance exercise: piston pump | 342 |
| MT 185 | Assembly & maintenance exercise: in-line centrifugal pump | 340 |
| MT 186 | Assembly & maintenance exercise: gear pump | 346 |

| RT | | |
|---|---|---|
| RT 390 | Test stand for control valves | 170 |
| RT 396 | Pump and valves and fittings test stand | 172 |

| ST | | |
|---|---|---|
| ST 250 | Cavitation | 182 |
| ST 510 | Full-scale sewerage system | 398 |

| TM | | |
|---|---|---|
| TM 605 | Coriolis force | 038 |

| VS | | |
|---|---|---|
| VS 101 | Cutaway model: underground hydrant | 320 |
| VS 102 | Cutaway model: resilient seated gate valve | 321 |
| VS 103 | Cutaway model: screw down valve | 321 |
| VS 104 | Cutaway model: changeover valve | 321 |
| VS 105 | Cutaway model: gas meter | 321 |
| VS 106 | Cutaway model: backflow preventer | 321 |
| VS 107 | Cutaway model: non-return butterfly valve | 321 |
| VS 108 | Cutaway model: water meter | 321 |
| VS 109 | Cutaway model: strainer | 321 |

| WL | | |
|---|---|---|
| WL 102 | Change of state of gases | 016 |
| WL 202 | Fundamentals of temperature measurement | 010 |
| WL 203 | Fundamentals of pressure measurement | 012 |
| WL 204 | Vapour pressure of water – Marcet boiler | 018 |

# Contact

**G.U.N.T. Gerätebau GmbH**
Hanskampring 15 – 17
D-22885 Barsbüttel
Germany

Tel. +49 (0)40 67 08 54 - 0
Fax +49 (0)40 67 08 54 - 42
Email sales@gunt.de
Web www.gunt.de
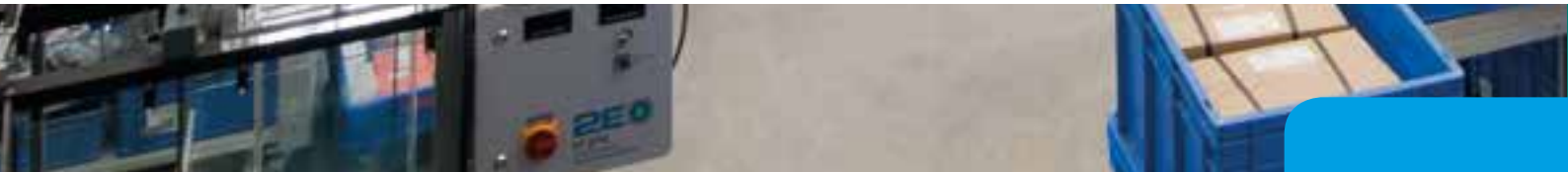
Visit our website
**www.gunt.de**