gunt HAMBURG

Equipment for engineering education

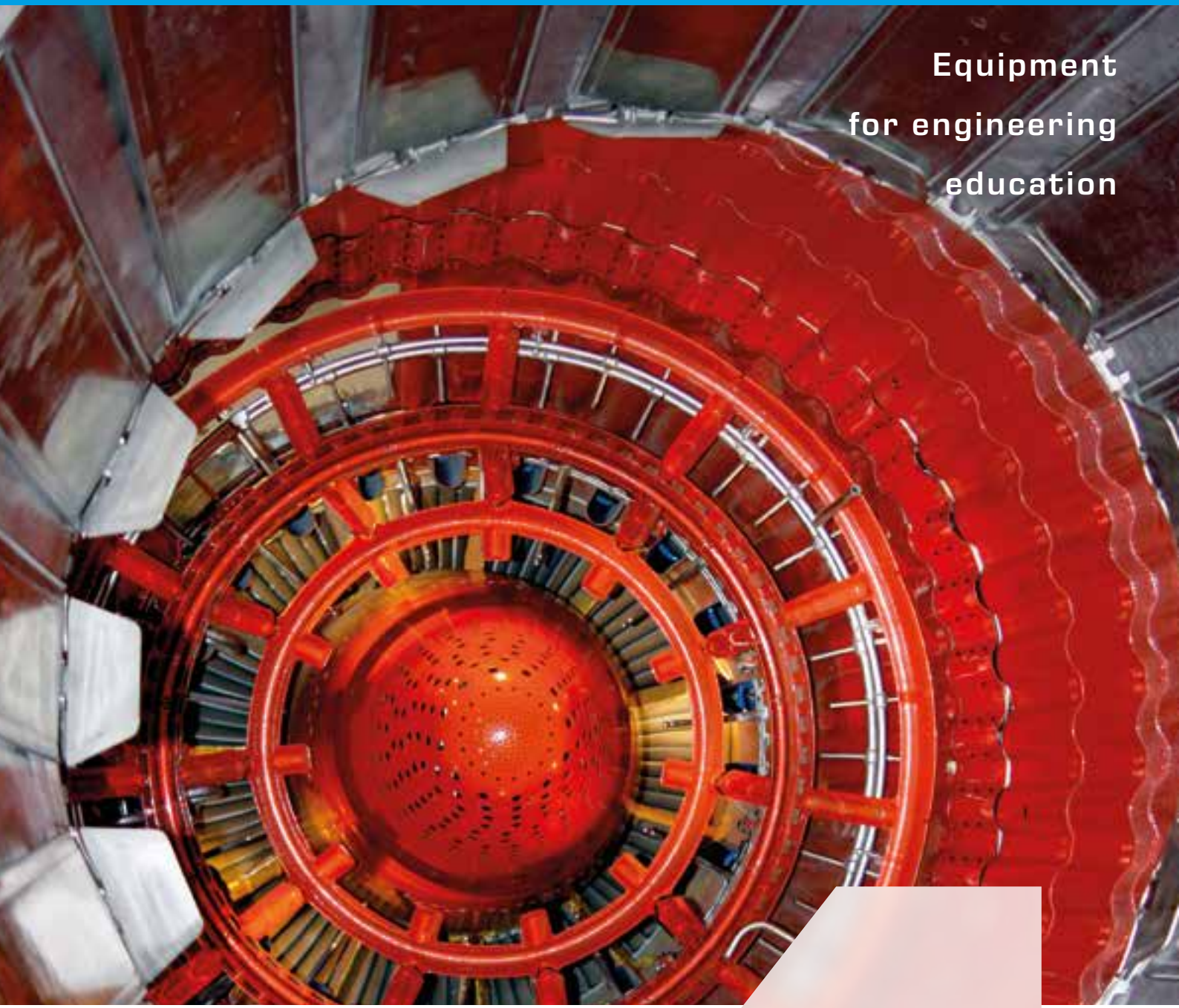

Fluid machinery

4a

Table of contents

Welcome to GUNT

In this catalogue, we present a comprehensive overview of our innovative demonstration and experimental units.

GUNT units are used for:

- education in technical professions
- training and education of technical personnel in trade and industry
- studies in engineering disciplines

Imprint

© 2018 G.U.N.T. Gerätebau GmbH. Any reuse, storage, duplication and reproduction of content – even in extracts – is prohibited without the written approval of G.U.N.T. Gerätebau GmbH.
GUNT is a registered trademark. This means GUNT products are protected, and subject to copyright.

No liability can be accepted for any misprints.
Subject to change without notice.

Image credits: G.U.N.T. Gerätebau GmbH, manufacturers' photos, Shutterstock, 123RF.
Design & typesetting: Profisatz.Graphics, Bianca Buhmann, Hamburg.
Printed on non-chlorinated, environmentally friendly paper.

Fluid machinery

	Introduction	004
1	Fundamentals	010
2	Driving machines	090
3	Driven machines	178
4	Power plants and applied cyclic processes	262
5	Equipment series	304
	Index	336
	Product overview	342

Fluid machinery – an application field of technical fluid mechanics

The field of fluid machinery is a significant area of application of fluid mechanics and thermodynamics. Fluid energy machines are the most important group of machines. This field plays a fundamental role in the training of future engineers.

Knowing about the function, setup, properties, and operation of fluid machinery is an essential part of the technical training. The field of machinery in general and the field of systems engineering in particular requires – in addition to general fluid mechanics – separate lectures and practical training on fluid machinery.

This is why the GUNT programme has dedicated an entire catalogue to this extensive subject. The graph below illustrates the structure of the GUNT programme for product sector 4. The field of general fluid mechanics is covered in catalogue 4. Catalogue 4b details the subject of hydraulic engineering and catalogue 4a deals with fluid machinery.

- machine technology
- system engineering
- aeronautics
- automotive engineering
- propulsion technology
- energy technologies

- machine technology
- aeronautics
- applied sciences
- shipbuilding
- energy technologies
- process technology

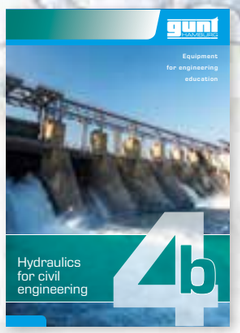

- hydraulic engineering
- supply engineering
- shipbuilding
- marine technology
- environmental engineering
- geosciences

What can GUNT do for you?

In real applications, fluid energy machines are often part of complex, large plants or systems in locations that are difficult to access, such as diesel engines in container ships or turbines in power plants.

The GUNT team has developed a broad range of laboratory-scale systems from this field that are designed to convey the functionality of these often invisible machines to students in a way that is **accessible** and **understandable**.

Students can use these laboratory devices to develop an understanding of the many applications of fluid machinery.

The educational concept of the GUNT devices is structured in a way that not only teaches students the actual functions of the fluid energy machine but also allows them to learn about its areas of practical application.

The range of GUNT products covers the comprehensive field of fluid machinery almost entirely.

A marine diesel engine from the Wärtsilä Corporation

Steam turbine system for a paper mill

Aircraft engine prior to installation

Fluid machinery – an application field of technical fluid mechanics

The following table is an excerpt from a curriculum as would be common for a technical university based on the tables of contents of reference books on fluid machinery. The GUNT devices cover most of these topics.

Main area	Elements, keywords
Fundamentals	■ fluid mechanics ■ thermodynamics ■ mechanics ■ efficiency, speed, power, velocity of the machines ■ construction methods for the machines ■ control
Turbomachines	■ energy conversion in the rotor ■ axial / radial flow-through direction ■ similarities and key figures ■ working methods ■ cavitation
Positive displacement machines	■ reciprocating piston engines ■ kinematics, forces, mass balancing ■ comparison of turbomachines and positive displacement machines
Driven machines	■ pumps ■ fans ■ compressors
Driving machines	■ hydraulic driving machines: water turbines ■ steam power plants: steam turbines ■ wind turbines ■ gas turbines ■ combustion engines
Steam generators and power plants	■ steam generation systems ■ condensers ■ steam power plant ■ pumped storage power plant
Refrigeration machines	■ cold production ■ evaporator refrigeration system, heat exchanger ■ heat pumps

Structure of the catalogue

Catalogue 4a is divided into five chapters. The first chapter is an introduction to the subject matter. It deals with the fundamentals of fluid mechanics, thermodynamics as well as topics from the field of mechanics and machine dynamics.

Chapters 2 to 4 then cover applications and other practical aspects, by introducing different driving and driven machines, power plants and applied cyclic processes from the GUNT programme.

Chapter 5 provides an overview of the equipment series from the fluid machinery product range. This chapter builds upon the knowledge conveyed in the previous chapters, and includes all of the topics presented in chapters 1 to 4.

Chapter 1 — **Fundamentals and introduction**

Fluid Mechanics	Thermodynamics	Machine Dynamics

Application and practical aspects

Chapter 2	Chapter 3	Chapter 4
Driving Machines	Driven Machines	Power Plants and Applied Cyclic Processes

Chapter 5 — **Equipment series**

GUNT-Labline	GUNT-FEMLine

The GUNT equipment series were developed with the goal of covering an entire field of interest and offering the necessary detailed knowledge on the individual requirements and aspects of this field.

The different devices in a series are all related, and build on each other. Even though each device focuses on a different issue or question, the topics are interrelated and constitute a complete subject area.

The **GUNT-Labline** offers a selection of compact and easy-to-handle devices that are suitable for both demonstrations and experiments, such as pumps, turbines and compressors.

The **GUNT-FEMLine** devices are larger and more powerful. This group combines different trainers to form a complete experimental setup. This opens up the possibility of a comprehensive and in-depth range of experiments for an entire subject field.

Using the Labline and FEMLine concepts, the GUNT development team has created two series from the subject field of **fluid machinery**. Please see chapter 5 of this catalogue for more detailed information on both series.

Classification of fluid machinery

"Fluid machinery" is an umbrella term used to describe all machines that convert energy with the help of a fluid.

For the purpose of classification, fluid energy machines can be divided into groups of machines. There are two basic criteria:

1. we distinguish between driven machines and driving machines based on the **energy flow** and the **direction of energy transfer**. Driving machines are also known as prime movers.
2. turbomachines differ from positive displacement machines in their **mode of operation and pressurisation.**

Moreover, the following differentiations are made:

- depending on the **physical properties of the fluid:** compressible, incompressible
- depending on the **mode of operation:** rotating or oscillating, normal suction or self-priming, single-stage, multi-stage...
- depending on the **direction of flow** of the fluid: radial, axial, diagonal...
- depending on the **design:** reciprocating engine, membrane, gear...
- depending on **use:** supply, drainage, circulation, site of operation...
- depending on the **source of energy:** thermal power, hydroelectric power, wind energy, electrical energy

A fluid energy machine can belong to several groups. The decision about which group the fluid energy machine is assigned to depends on the perspective of the observer. If the focus is, for example, on the **working medium**, the categorisation is made by differentiating between **hydraulic** fluid energy machines with **incompressible fluids** and **thermal** fluid machinery with **compressible fluids**. GUNT catalogues 3 and 4 are based on this categorisation. Catalogue 3 covers part of the thermal fluid energy machines. Catalogue 4, among other things, deals with hydraulic fluid energy machines.

This catalogue offers an overview of the whole range of fluid machinery. The machines are classified according to the way they convert energy. The graph below illustrates this.

Fluid energy machine
a machine that transfers energy by means of a liquid or gaseous fluid

Driving machine, also known as prime mover
energy is removed from the fluid

Driven machine
energy is added to the fluid

Turbomachine
transfer of energy between the fluid and the machine by means of flow forces

Positive displacement machine
transfer of energy between the fluid and the machine by means of a variable volume, generated by a displacement device

Fluid machinery

Driven Machines
Energy is added to the fluid

Turbomachines
Transfer of energy between the fluid and the machine by means of flow forces

Hydraulic
- centrifugal pump
- propeller pump
- jet pump

Thermal
- ventilator
- fan
- radial compressor

Positive displacement machines
Transfer of energy between the fluid and the machine by means of a variable volume, generated by a displacement device

Hydraulic
- piston pump
- vane pump
- gear pump
- spindle pump

Thermal
- piston compressor
- screw compressor
- vane compressor

Fluid machinery

Driving Machines
Energy is removed from the fluid

Turbomachines
Transfer of energy between the fluid and the machine by means of flow forces

Hydraulic
- water turbine

Thermal
- wind turbine
- steam turbine
- gas turbine
- jet engine

Positive displacement machines
Transfer of energy between the fluid and the machine by means of a variable volume, generated by a displacement device

Hydraulic
- hydraulic engine

Thermal
- internal combustion engine
- steam engine
- Stirling engine
- gas expansion engine

1

Fundamentals

Introduction

Overview Fluid mechanics, thermodynamics, machine dynamics	012

Fluid mechanics

HM 115 Hydrostatics trainer	014
HM 112 Fluid mechanics trainer	016
HM 122 Pressure losses in pipes	018
HM 150.09 Horizontal flow from a tank	020
HM 260 Characteristics of nozzles	022
HM 261 Nozzle pressure distribution	024
HM 230 Flow of compressible fluids	026
Basic knowledge Cavitation	028
HM 380 Cavitation in pumps	030
ST 250 Cavitation	032
HM 152 Potential flow	034
HM 133 Visualisation of flow fields	036
HM 226 Wind tunnel for visualisation of streamlines	038
Overview HM 241 Fundamentals of water flow	040
HM 241 Fundamentals of water flow	042

Thermodynamics

Basic knowledge Fundamentals of thermodynamics	044
WL 102 Change of state of gases	048
ET 351C Thermodynamics of the refrigeration circuit	050
WL 204 Vapour pressure of water – Marcet boiler	052
WL 440 Free and forced convection	054
WL 372 Radial and linear heat conduction	056
Overview Series WL 110 Heat exchanger with supply unit	058
WL 110 Heat exchanger supply unit	060
WL 110.01 Tubular heat exchanger	062
WL 110.02 Plate heat exchanger	064
WL 110.03 Shell & tube heat exchanger	066
WL 110.04 Stirred tank with double jacket and coil	068
Overview WL 320 Wet cooling tower	070
WL 320 Wet cooling tower	072
WL 210 Evaporation process	074
WL 220 Boiling process	076
WL 230 Condensation process	078

Machine dynamics

Overview Machine dynamics	080
RT 050 Training system: speed control, HSI	082
TM 632 Centrifugal governor	084
TM 620 Bending elasticity in rotors	086
TM 180 Forces in reciprocating engines	088

Fluid mechanics, thermodynamics, machine dynamics

This chapter conveys basic knowledge in fluid mechanics, thermodynamics and machine dynamics. Why is that?

Understanding the function and method of operation of fluid machinery requires basic knowledge of the fundamental physics of **fluid mechanics** and **thermodynamics**: based on the example of a propeller turbine jet engine, also known as a TP or turboprop engine, we will briefly present the fundamental science necessary for understanding the processes that occur to and within the corresponding components.

Another subsection is dedicated to the subject of **machine dynamics**. Machine dynamics must be taken into account as early as possible during the design phase of a fluid energy machine, in order to prevent risks to the machine and its surroundings during operation.

In this chapter, we will present a selection of GUNT devices from these three subject areas.

Machine dynamics

Turboprop engines have a rotating shaft with several rotors for additional mass. The rotors of the compressor and the turbine are used to transfer mechanical energy from or to the fluid, while the shaft passes the energy on. The combination of mass and shaft forms an oscillatory system. Imbalance forces, depending on speed, can cause bending vibrations in this system. Thus, the design of a turboprop engine requires knowledge of the behaviour of speed and bending vibrations. During operation, the system is monitored and controlled to prevent critical operating conditions.

Fluid mechanics

Knowledge of fluid mechanics with regard to the individual components:

1 propeller
- flow around bodies

2 inlet
- fluid-mechanical adjustment
- prevention of flow separation and vortices
- transition from subsonic to supersonic speed

3 compressor
- flow phenomena during contraction / enlargement
- continuity equation / Bernoulli's Principle
- flow with large pressure changes
- flow properties of the guide vanes and blades: flow around bodies

4 combustion chamber
- flow course of the air flow
- fuel injection valves: free jet and flow course in nozzles

5 turbine
- flow properties of the guide vanes and blades: flow around bodies
- distribution of velocity and pressure in the nozzles
- velocity triangles – absolute and relative velocities

6 outlet, nozzle
- flow course in the nozzle or diffuser
- expansion
- pressure gradient
- flow with large pressure differences
- nozzle pressure distribution – supersonic / subsonic speed

schematic representation of the components of a turboprop engine

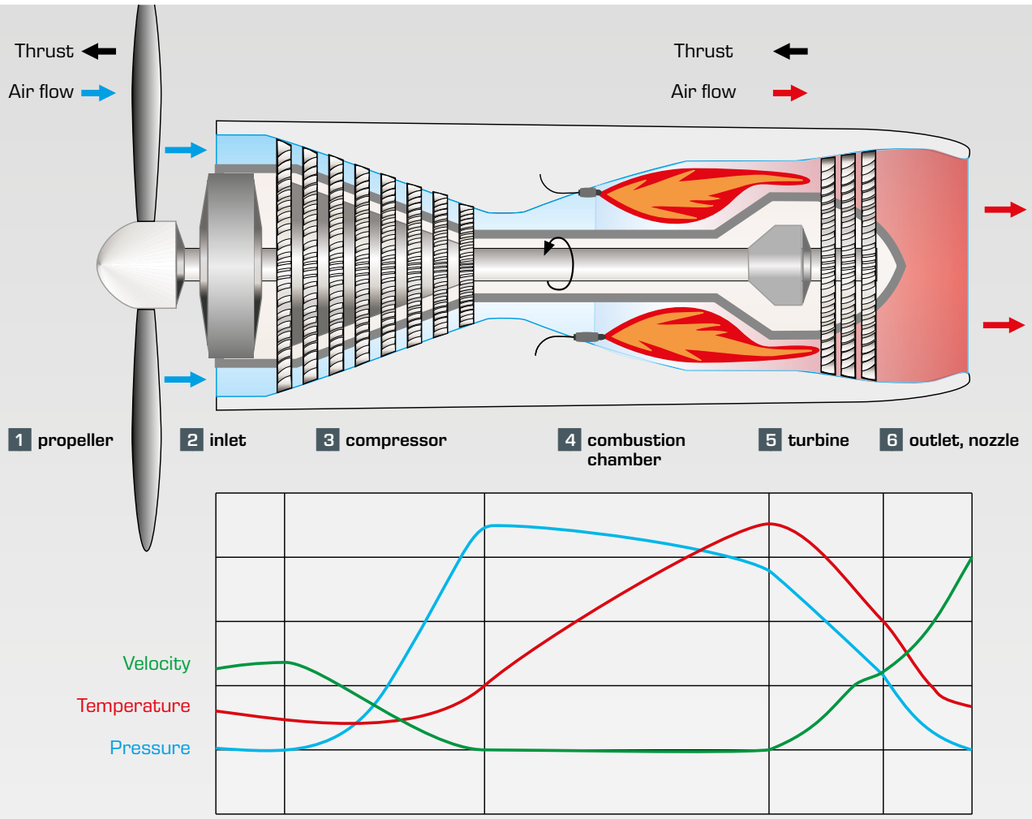

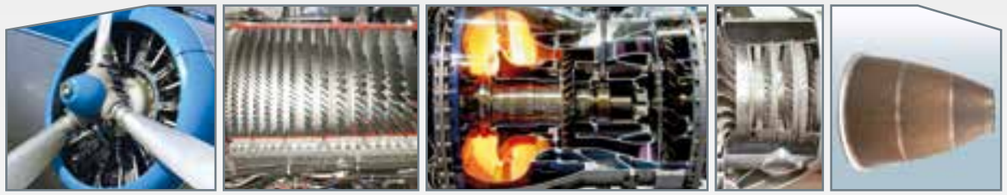

Thermodynamics

Knowledge of thermodynamics with regard to the individual components:

1 propeller

2 inlet

3 compressor
- energy conversion in a compressor stage
- adiabatic compression
- Gay-Lussac's law
- change of state of gases (isochoric)

4 combustion chamber
- fuels and combustion
- entropy / enthalpy
- exothermal reaction
- isobaric heating

5 turbine
- T-s diagram
- energy conversion

6 outlet, nozzle
- expansion
- pressure gradient
- nozzle pressure distribution

HM 115
Hydrostatics trainer

The illustration shows a similar unit.

Description

- **basic experiments in hydrostatics**
- **wide range of experiments**
- **closed water circuit with tank and pump**

Hydrostatics is the study of fluids at rest. Phenomena occurring as a result of hydrostatic pressure are analysed and the force effect determined. Hydrostatic aspects play a crucial role in various areas of engineering, such as in plumbing and domestic engineering, in pump manufacturing, in aerospace and in shipping (buoyancy, load on the sides of a ship).

The HM 115 trainer can be used to conduct experiments in the field of hydrostatics, such as ground pressure measurement or demonstrating Boyle's law. Determining the centre of pressure completes the range of experiments. Furthermore, experimental units for studying capillarity and buoyancy are included. The hydrostatic pressure and surface tension are measured. Additionally, one experiment uses a Pitot tube and a tube for static pressure to study the pressure components in a flowing fluid.

To make the functions and processes visible, the tanks and the experimental units use a transparent design. Tanks and pipes are made entirely of plastic.

Various pressure gauges are available for measuring pressure and differential pressure of the liquid fluid, such as a Pitot tube, tube for static pressure a pressure sensor with digital display, twin tube manometers or a differential pressure manometer. A diaphragm manometer and a Bourdon tube manometer indicate the pressure of the gaseous fluid.

The trainer has its own air and water supply. The closed water circuit includes a supply tank with submersible pump. A compressor is included to generate positive and negative pressures for the experiments with air.

Learning objectives/experiments

- study of buoyancy on a variety of bodies
- study of the density of liquids
- hydrostatic pressure, Pascal's law
- communicating vessels
- determination of the centre of pressure
- study of surface tensions
- demonstration of capillarity
- Boyle's law
- study of static and dynamic pressure component in flowing fluid
- familiarisation with various methods of pressure measurement

HM 115
Hydrostatics trainer

1 twin tube manometers, 2 tank, 3 digital pressure display, 4 pressure sensor, 5 supply tank with submersible pump, 6 Pitot tube and tube for static pressure, 7 differential pressure manometer, 8 pipe section, 9 hydrostatic pressure in liquids, 10 pressure vessel, 11 pressure vessel, 12 Bourdon tube manometer, 13 diaphragm manometer

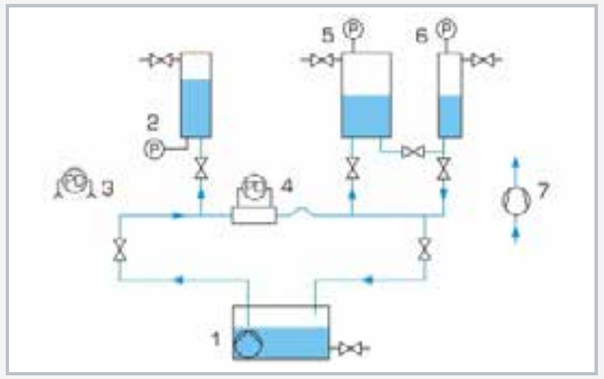

1 supply tank with submersible pump, 2 tank with pressure sensor, 3 twin tube manometers, 4 Pitot tube + tube for static pressure with differential pressure manometer, 5 pressure vessel with Bourdon tube manometer, 6 pressure vessel with diaphragm manometer, 7 compressor; P pressure, PD differential pressure

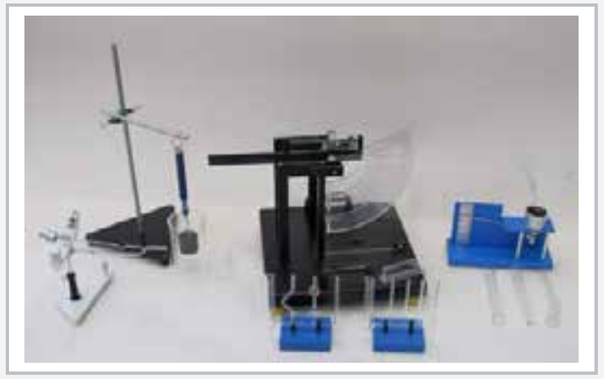

Accessories for a wide range of experiments

Specification

[1] comprehensive experimental introduction to hydrostatics
[2] transparent tank for observing the processes
[3] wide range of accessories included: compressor for generating positive and negative pressures, bottom pressure apparatus, two areometers
[4] 1 experimental unit each: measuring the buoyancy force, investigation of the hydrostatic pressure in liquids, measuring the surface tension, communicating vessels, capillarity
[5] Pitot tube for determining the total pressure and tube for static pressure
[6] instruments: pressure sensor with digital display, differential pressure manometer, twin tube manometers, diaphragm manometer, Bourdon tube manometer

Technical data

Pump
- power consumption: 250W
- max. flow rate: $9m^3/h$
- max. head: 7,6m

Compressor
- power: 65W
- pressure at inlet: 240mbar
- pressure at outlet: 2bar

3 tanks
- height: 500mm
- Ø 100mm, Ø 133mm, Ø 200mm

Supply tank for water: approx. 50L

2 areometers with different measuring ranges

Measuring ranges
- pressure: 2x -1...1,5bar
- differential pressure: 0...500mmWC
- differential pressure: 0...0,4bar
- density: 1x 0,8...1g/cm^3, 1x 1...1,2g/cm^3

230V, 50Hz, 1 phase
230V, 60Hz, 1 phase; 120V, 60Hz, 1 phase
UL/CSA optional
LxWxH: 1760x820x1940mm
Weight: approx. 270kg

Scope of delivery

1 trainer
1 compressor
1 bottom pressure device
2 areometers
1 wedge-shaped tank
1 experimental unit each: surface tension, hydrostatic pressure in fluids, buoyancy force, capillarity, communicating vessels
1 set of instructional material

HM 112
Fluid mechanics trainer

Description

- **extensive possibilities for basic experiments in fluid mechanics**
- **different pipe sections with various pipe elements**
- **GUNT software for data acquisition**

The knowledge of flow in pipe systems has a wide range of practical applications in many fields. When water flows through a pipe system the internal friction and the pipe friction cause pressure losses. The pressure losses in the fluid are directly dependent on the resistances and the flow velocity.

The HM 112 trainer allows a variety of experiments for flow and pressure measurement and the determination of pressure losses and pressure curves in different pipe elements. The measured values are analysed using the GUNT software supplied. Characteristics can easily be recorded and analysed directly on a PC.

The trainer contains six different, horizontally arranged pipe sections, which allow the effects of pipe material, diameter and changes in cross-sectional and direction on the pressure loss to be studied. Measuring objects such as valves, strainers, a Venturi nozzle, a Pitot tube or orifice plate flow meter or measuring nozzle can be used in another pipe section. To make the functions clearly visible, some of the measuring objects are transparent. Additional measuring objects are available as a set (HM 110.01) to expand the scope of experiments.

The trainer can be operated independently from the mains water network and is equipped with a pump and a water tank. The trainer includes a rotameter to determine the flow rate. Pressure measuring points are located immediately upstream and downstream of the measuring objects. These are designed as annular chambers, ensuring a precise pressure measurement. Five different pressure gauges with analogue or digital displays are provided for pressure measurement.

Depending on the measurement method, the measured values can be read off the analogue manometer or digital displays. The measured values are transmitted directly to a PC via USB. The data acquisition software is included.

Learning objectives/experiments

- flow and pressure measurement methods
- function of nozzle, orifice, Venturi nozzle
- losses due to pipe bends and pipe angles, changes in cross-section and shut-off valves and fittings
- determining pipe friction factors and resistance coefficients
- opening characteristics in shut-off valves and fittings

HM 112
Fluid mechanics trainer

1 thermometer, 2 twin tube manometer, 3 rotameter, 4 different pipe sections, 5 pump, 6 storage tank, 7 pressure sensor, 8 differential pressure meter, 9 digital pressure indicators, 10 6 tube manometers

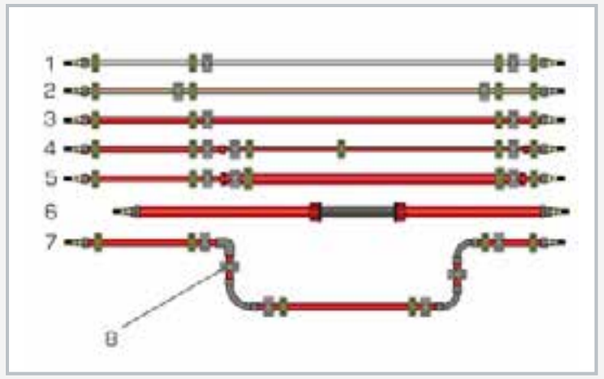

Representation of the pipe sections: 1 steel pipe, 2 copper pipe, 3 PVC pipe, 4 contraction in cross-section, 5 enlargement in cross-section, 6 measuring section for holding measuring objects, 7 pipe bends and pipe angles, 8 measuring point with annular chamber

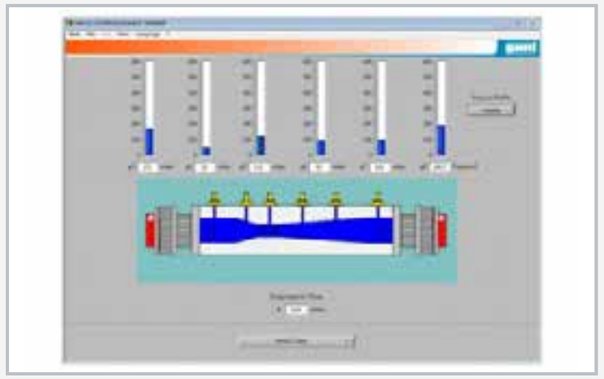

Software screenshot: pressure and velocity curve in a Venturi nozzle

Specification

[1] trainer for fluid mechanics experiments
[2] interchangeable measuring objects, partly transparent: angle seat valve, diaphragm valve, ball valve, non-return valve, strainer, Pitot tube, Venturi nozzle, orifice plate flow meter and measuring nozzle
[3] different pipe sections
[4] precise pressure measurement using annular chambers
[5] differential pressure measurement using tube manometers
[6] flow rate measurement using rotameter
[7] digital displays for pressure and differential pressure
[8] GUNT software for data acquisition via USB under Windows 7, 8.1, 10
[9] additional set of measuring objects HM 110.01 available

Technical data

Pump
- power consumption: 0,37kW
- max. flow rate: 4,5m^3/h
- max. head: 28,5m

Storage tank: 55L
Pipe section for interchangeable measuring objects
- 32x1,8mm, PVC

3 straight pipe sections, length: 1000mm
- ½", St, galvanised
- 18x1mm, Cu
- 20x1,5mm, PVC

Pipe section, PVC
- gradual contraction, Ø: 20x1,5...16x1,2mm
- gradual enlargement, Ø: 20x1,5...32x1,8mm
- with 90° pipe angle/ pipe bend, Ø: 20x1,5mm

Tube manometer: 2x 2 tubes, 1x 6 tubes

Measuring ranges
- differential pressure: 1x 0...200mbar
- pressure:
  - 6x 0...390mmWC
  - 4x 0...600mmWC
- flow rate: 1x 0,2...2,5m^3/h
- temperature: 1x 0...60°C

230V, 50Hz, 1 phase
230V, 60Hz, 1 phase; 120V, 60Hz, 1 phase
UL/CSA optional
LxWxH: 2220x820x1980mm
Weight: approx. 250kg

Required for operation

PC with Windows recommended

Scope of delivery

1 trainer
1 set of measuring objects
1 set of accessories
1 GUNT software CD + USB cable
1 set of instructional material

HM 122
Pressure losses in pipes

Description

- **resistances and losses in turbulent pipe flow**
- **closed water circuit with tank and pump**
- **ideal measurement results through long measuring section with several pressure measuring points**
- **precise pressure measurement via annular chambers**

Knowledge of pressure losses in various pipe elements is a key factor in designing pipe systems. The HM 122 trainer allows the determination by experiment of these important coefficients and the investigation of the pressure curve in typical pipe sections.

The trainer comprises three straight pipe sections made of different materials and with different diameters. Also included are: a pipe section with pipe bends, a pipe section with contraction and enlargement and a pipe section with interchangeable valves and fittings.

The large length of the pipe sections of 2,5m and the fact each section is fitted with at least five pressure measuring points means it is possible to obtain very accurate measurements and demonstrate the linear reduction in pressure in a pipe.

A rotameter and a volumetric measuring tank are included for comparison measurements and calibrations. The volumetric measurement using a stopwatch gives highly accurate results even at low flow rates. Tube manometers, a Bourdon tube pressure gauge and a differential pressure sensor are provided for pressure and differential pressure measurements.

The pressure measuring points are designed as annular chambers for accurate pressure measurement. A movable manometer panel saves space and allows for optimal accessibility. The trainer includes
a closed water circuit with tank and submersible pump. This means the trainer can be used independent of the laboratory network.

Learning objectives/experiments

- fundamentals of flow measurement
- fundamentals of pressure measurement
- determination of the friction factor for different pipe materials and diameters
- resistance coefficients of pipe bends, enlargements and contractions
- pressure losses and opening characteristics of valves and fittings

HM 122
Pressure losses in pipes

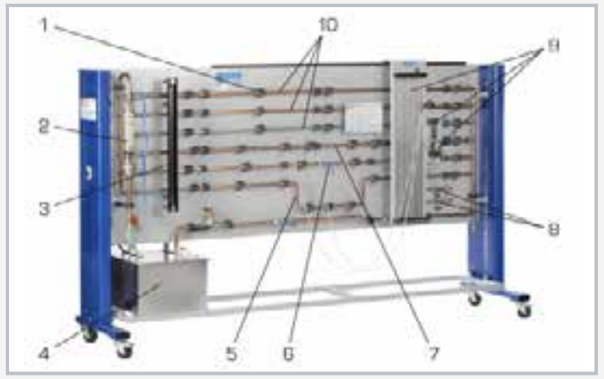

1 annular chamber for pressure measurement, 2 rotameter, 3 measuring tank level indicator, 4 tank with submersible pump, 5 pipe section with pipe bends, 6 pipe section with interchangeable valves and fittings, 7 pipe section with contraction and enlargement, 8 interchangeable valves and fittings, 9 movable panel with Bourdon tube pressure gauge, differential pressure sensor and tube manometer, 10 long pipe section

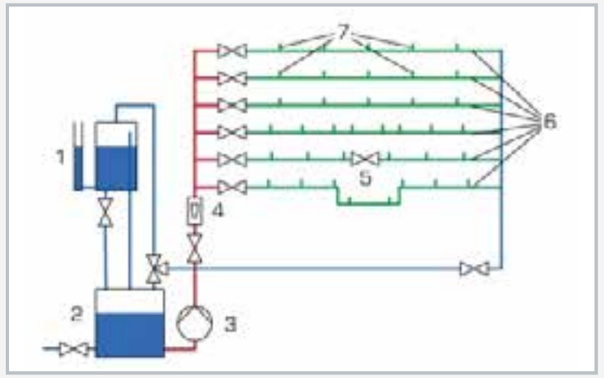

1 volumetric measuring tank, 2 supply tank, 3 submersible pump, 4 rotameter, 5 interchangeable valves and fittings, 6 different pipe sections, 7 pressure measuring points

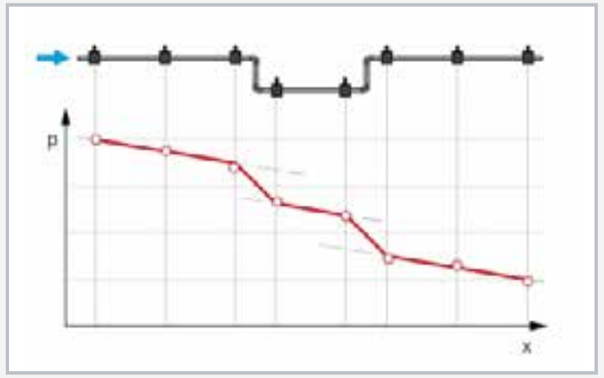

Pressure curve in the pipe section with 4 pipe bends (top); x position in the pipe section, p water pressure

Specification

[1] investigation of pressure losses
[2] three long pipe sections made of copper and steel with different diameters
[3] pipe section with pipe bends
[4] pipe section with sudden contraction and enlargement
[5] pipe section with interchangeable fittings with different opening characteristics: needle valve, shut-off valve, ball valve
[6] determination of the pressure curve along the measuring section with up to 8 pressure measuring points
[7] easy pressure measurement via annular chambers
[8] pressure and differential pressure measurement with 8 tube manometers, Bourdon tube pressure gauge and electronic differential pressure sensor
[9] flow measurement via rotameter and volumetric measuring tank
[10] closed water circuit with tank and submersible pump
[11] stainless steel tank

Technical data

Pump
- power consumption: 0,45kW
- max. flow rate: 4,8m^3/h
- max. head: 22,6m

3 straight pipe sections, measuring length: 2,5m
- copper, diameter: 28x1mm, 22x1mm
- steel, diameter: 1/2"

Pipe section with pipe bend
- copper, diameter: 22x1mm

Pipe section with contraction/enlargement
- copper
- contraction, diameter: 18x1mm
- enlargement, diameter: 28x1mm

Pipe section with valves and fittings
- copper, diameter: 18x1mm

Volumetric measuring tank: 20L
Tank for water: 110L

Measuring ranges
- pressure: -1...1,5bar
- differential pressure: 1x 0...+/-350mbar, 8x 0...1000mmWS
- flow rate: 1x 400...4000L/h

230V, 50Hz, 1 phase
230V, 60Hz, 1 phase; 120V, 60Hz, 1 phase
UL/CSA optional
LxWxH: 3260x790x1930mm
Weight: approx. 325kg

Scope of delivery

1 trainer
1 set of instructional material

HM 150.09
Horizontal flow from a tank

Description

- **visualisation of the trajectory of the outlet jet**
- **study of openings with different diameters and contours**
- **determination of the contraction coefficient**

Hydrodynamics considers the relationship between the trajectory, the outlet contour and the outlet velocity during flow from tanks. These considerations have practical applications in hydraulic engineering or in the design of bottom outlets in dams, for example.

HM 150.09 allows a user to study and visualise the profile of a water jet. Additionally, the contraction coefficient can be determined as a characteristic for different contours.

The experimental unit includes a transparent tank, a point gauge and a panel for visualising the jet paths. An interchangeable insert is installed in the tank's water outlet to facilitate the investigation of various openings. Four inserts with different diameters and contours are provided along with the unit.

To visualise the trajectory, the issued water jet is measured via a point gauge that consists of movable rods. The rods are positioned depending on the profile of the water jet. This results in a trajectory that is transferred to the panel.

The tank contains an adjustable overflow and a scale. In this way, a precise adjustment and accurate reading of the fill level are possible. The experimental unit is positioned easily and securely on the work surface of the HM 150 base module. The water is supplied and the flow rate measured by HM 150. Alternatively, the experimental unit can be operated by the laboratory supply.

Learning objectives/experiments

- recording the trajectory of the water jet at different outlet velocities
- study of how the level in the tank affects the outlet velocity
- determination of the contraction coefficient for different contours and diameters
- comparison of the actual and theoretical outlet velocity

HM 150.09
Horizontal flow from a tank

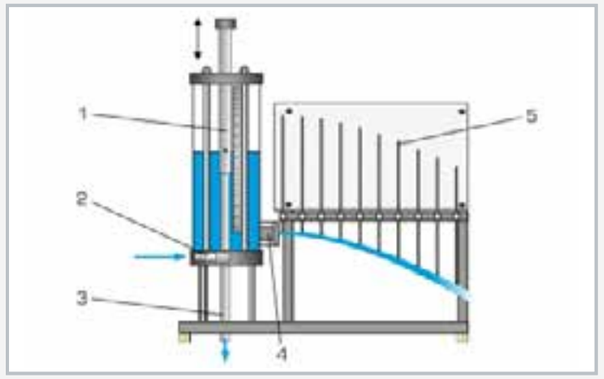

1 tank with adjustable overflow, 2 water supply, 3 water overflow, 4 water outlet, 5 point gauge for the water jet

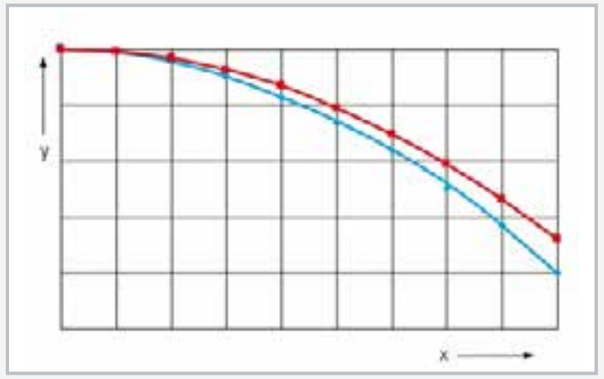

Measured and calculated (theoretical) trajectory of the outlet jet;
red: theoretical, blue: measured

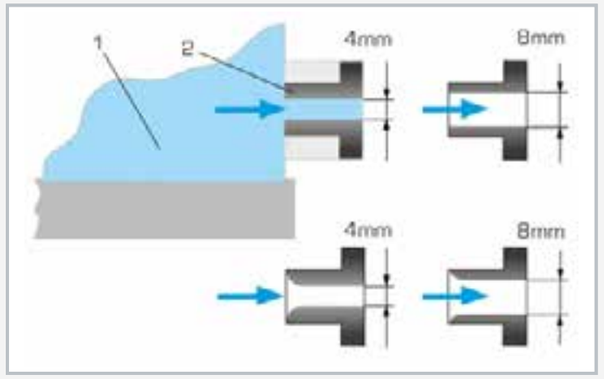

Interchangeable inserts to study different openings
1 tank, 2 insert; top: outlet from the tank through square contour,
bottom: outlet from the tank through rounded contour

Specification

[1] study of horizontal flows from tanks
[2] determining the contraction coefficient for different outlet contours and diameters
[3] tank with adjustable overflow and scale
[4] four interchangeable inserts with different diameters and contours
[5] point gauge with eight movable rods for visualisation of the jet path
[6] white panel for recording the trajectory
[7] flow rate determined by HM 150 base module
[8] water supply using HM 150 base module or via laboratory supply

Technical data

Tank
- height: 510mm
- diameter: 190mm
- contents: approx. 13,5L

Inserts with rounded contour
- 1x diameter: 4mm
- 1x diameter: 8mm

Inserts with square contour
- 1x diameter: 4mm
- 1x diameter: 8mm

Point gauge, 8 movable rods
- length: 350mm

LxWxH: 865x640x590mm
Weight: approx. 27kg

Required for operation

HM 150 (closed water circuit) or water connection, drain

Scope of delivery

1 experimental unit
4 inserts
1 set of instructional material

HM 260
Characteristics of nozzles

Learning objectives/experiments

- determining the critical pressure ratio
- demonstration of the "choking effect"
- determining flow velocity in the narrowest cross-section
- measurement of the reaction or action force of the flowing fluid
- determine nozzle efficiency by thrust

Description

- **force effects in nozzle flow**
- **determining the nozzle efficiency**
- **four convergent-divergent nozzles with different area ratios, one convergent nozzle and one baffle plate**

Fluids are accelerated in nozzles, while the pressure decreases. When using compressible fluids (e.g. air) very high speeds can be achieved by this process, often in the supersonic range. Nozzles are used in steam turbines, in injector devices, in supersonic aircraft and rockets. The impact forces or thrust (action or reaction force) occurring in the fluid is referred to when designing the shape of nozzles.

HM 260 offers two experiment layouts for nozzles, in which either the occurring action force or reaction force of the fluid is considered. Characteristics such as flow velocity and nozzle efficiency are measured. In addition, the "choking effect" is demonstrated, where the mass flow stops increasing upon reaching the critical pressure ratio. Air is used as a compressible fluid.

In the first experiment layout to determine the reaction force, a nozzle is inserted into the force measuring device. The force measuring device consists of a bending beam, whose deformation is measured electronically. The air pressure upstream and downstream of the nozzle can be adjusted. Compressed air flows through the nozzle and the occurring reaction force (thrust) of the fluid is measured.

In the second experiment layout, the baffle plate is inserted into the force measuring device and the nozzle is positioned above the baffle plate. The position of the nozzle is adjustable, so that the distance between the nozzle and the baffle plate can be varied. The flow at the nozzle outlet impacts against the baffle plate and the action force (impact force) of the fluid is detected by the deformation of the bending beam.

Pressures and mass flow are also detected in addition to the force. The temperatures are also measured, in order to determine the mass flow precisely. Four convergent-divergent and one convergent nozzle as well as a baffle plate are available for experiments.

HM 260
Characteristics of nozzles

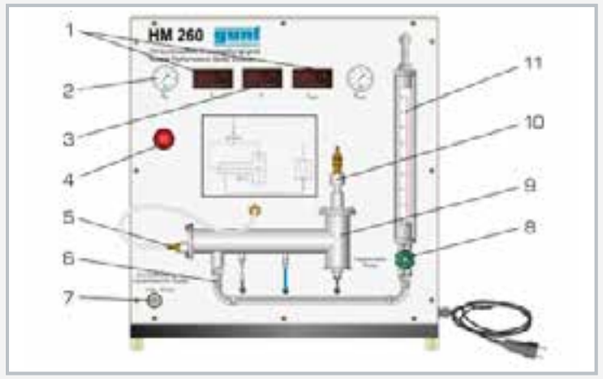

1 display for temperature, 2 display for pressure, 3 display for force, 4 pressure regulator, 5 air intake, 6 air outlet, 7 compressed air connection, 8 valve for adjusting the mass flow, 9 measuring section, 10 air intake, 11 rotameter

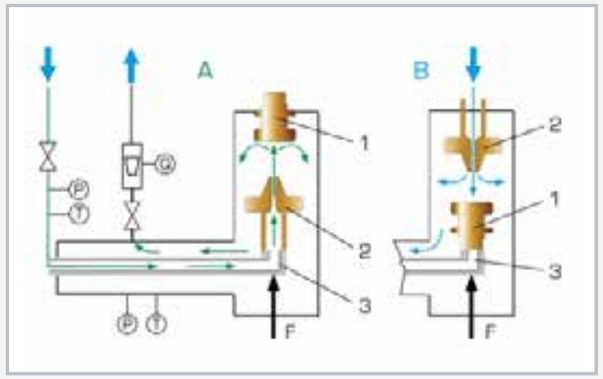

Experiment layout A measuring reaction force (thrust) and B measuring action force (impact force): 1 baffle plate, 2 nozzle, 3 force;
T temperature, P pressure, Q flow rate, F force

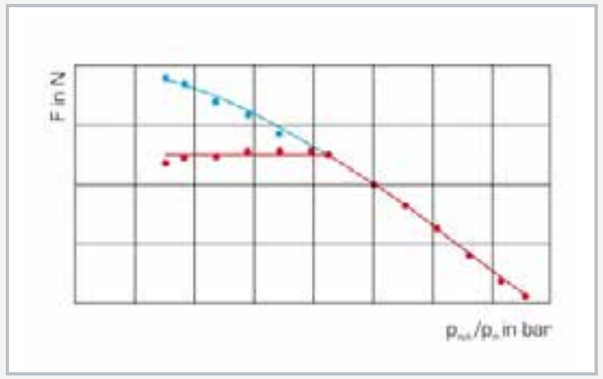

Reaction force (thrust) at the nozzle
blue overall thrust, red force from motive force (mass flow * velocity), p_{out}/p_{in} critical pressure ratio, F force

Specification

[1] detect impact force or thrust at nozzle to determine the flow velocity and nozzle efficiency
[2] experiment layout A: measuring reaction force (thrust) of the fluid at the nozzle
[3] experiment layout B: measuring action force of the fluid at the baffle plate
[4] air intake adaptable according to the experiment layout
[5] distance between baffle plate and nozzle can be adjusted
[6] compressed air regulator for adjusting the pressure downstream of the nozzle
[7] needle valve on the flow meter for adjusting the back pressure
[8] measuring reaction or action force of the nozzle by deformation of the bending beam
[9] 5 nozzles with different contours (4 convergent-divergent, 1 convergent) and 1 baffle plate
[10] instruments: manometer and digital temperature display upstream and downstream of the nozzle, as well as rotameter

Technical data

Air consumption of the experimental unit
- compressed air: max. 10bar
- air consumption: approx. 5g/s

5 nozzles, brass
- 4x convergent-divergent
- 1x convergent
- diameter, all nozzles: 2mm
- length, divergent nozzles: 3,6 to 15,8mm

Compressed air regulator
- control range: 0...8,6bar

Measuring ranges
- temperature: 0...100°C
- pressure: 2x 0...10bar
- mass flow rate: 0,7...8,3g/s
- force: 0...2N

230V, 50Hz, 1 phase
230V, 60Hz, 1 phase; 120V, 60Hz, 1 phase
UL/CSA optional
LxWxH: 750x450x810mm
Weight: approx. 27kg

Required for operation

compressed air: max. 10bar, 250NL/min

Scope of delivery

1 experimental unit
5 nozzles
1 baffle plate
1 set of instructional material

HM 261
Nozzle pressure distribution

Description

- **pressure distribution in convergent and divergent nozzles**
- **three nozzles with different contours**
- **velocity of sound and shock wave**

Convergent nozzles are used in the subsonic range. Velocities in the supersonic range can be achieved in de Laval nozzles; their nozzle geometry is a combination of convergent and divergent contours. De Laval nozzles are used in supersonic wind tunnels, steam turbines, jet engines and rocket technology. Pressure curves are a good way of representing the different velocity ranges in the nozzle, such as subsonic, supersonic and shock wave.

The experimental unit HM 261 is used to measure pressure curves in convergent and convergent-divergent nozzles (de Laval nozzles) and to study the actual flow of compressible fluids. In addition, the "choking effect" is demonstrated, where the mass flow rate stops increasing upon reaching the critical pressure ratio. Air is used as a compressible fluid.

In the experiment, the air flows through a nozzle and is thus accelerated. The pressure curve is recorded in the direction of flow over several measuring points. The air pressure upstream and downstream of the nozzle can be adjusted.

Three interchangeable nozzles are available to study the pressure and velocity ratios: one convergent contour and two de Laval nozzles with different length nozzle extensions.

The measured values for temperatures, pressures and mass flow rate are recorded.

Learning objectives/experiments

- pressure curve in
  - de Laval nozzles
  - convergent nozzles
- connection between inlet pressure and mass flow rate or exit pressure and mass flow rate
- how pressure drop in the nozzle affects the temperature
- determining the critical pressure ratio (Laval pressure ratio)
- demonstration of the "choking effect"
- proof of shock waves

HM 261
Nozzle pressure distribution

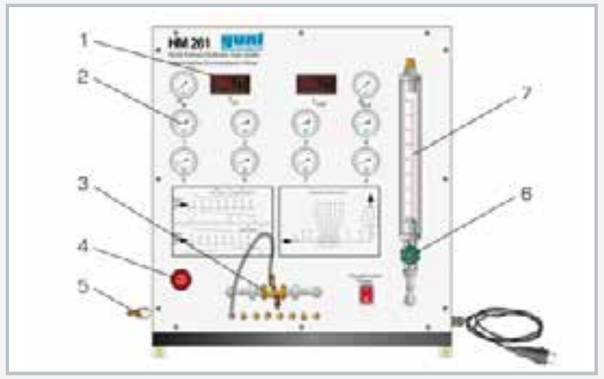

1 display for temperature, 2 display for pressure, 3 nozzle, 4 compressed air regulator, 5 air inlet, 6 valve for adjusting the mass flow rate, 7 rotameter

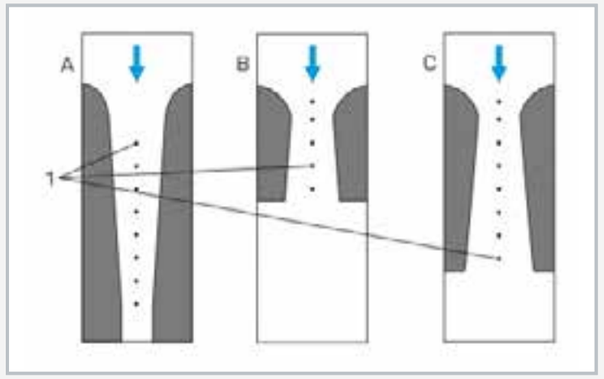

Nozzles with different contours: A convergent nozzle, B short de Laval nozzle, C long de Laval nozzle; 1 pressure measuring point, blue arrow: direction of the flow

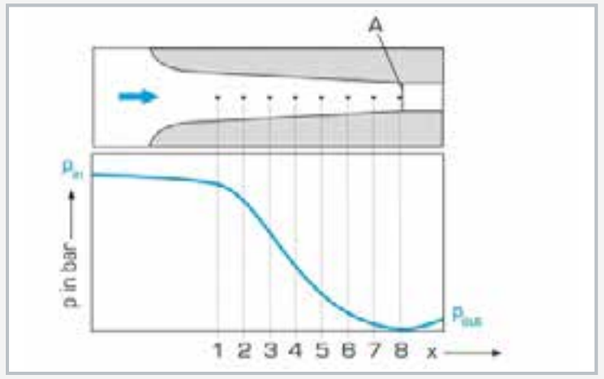

Pressure distribution in the convergent nozzle: A narrowest cross-section, x pressure measuring points, p pressure

Specification

[1] nozzle pressure distribution in actual flow of compressible fluids
[2] three nozzles with pressure measurement points: 1 convergent nozzle, 1 short and 1 long de Laval nozzle
[3] compressed air regulator for adjusting the pressure downstream of the nozzle
[4] needle valve on the flow meter for adjusting the back pressure
[5] instruments: manometer and digital temperature display upstream and downstream of the nozzle as well as rotameter

Technical data

Air consumption of the experimental unit
- compressed air: max. 10bar
- air consumption: approx. 5g/s

3 nozzles, brass
- 1 x de Laval nozzle, short nozzle extension
- 1 x de Laval nozzle, long nozzle extension
- 1 x convergent nozzle

Compressed air regulator
- control range: 0...8,6bar

Measuring ranges
- temperature: 0...100°C
- pressure: 2x 0...10bar, 8x 1...9bar
- mass flow rate: 0,7...8,3g/s

230V, 50Hz, 1 phase
230V, 60Hz, 1 phase; 120V, 60Hz, 1 phase
UL/CSA optional
LxWxH: 750x450x830mm
Weight: approx. 45kg

Required for operation

compressed air connection: max. 10bar, 250NL/min

Scope of delivery

1 experimental unit
3 nozzles
1 set of instructional material

HM 230
Flow of compressible fluids

Description

- **investigation of flow in compressible fluids**
- **varied range of experiments for studying subsonic and transonic flow**
- **de Laval nozzle generates velocities up to Ma 1**

Compressible fluids change their density due to pressure change in the flow. Flows with velocities less than Ma 0,3 are regarded as incompressible and the change in density is negligible. At higher velocities, the density has to be included in calculations. These conditions must be taken into consideration when designing e.g. turbo compressors, jets and fast planes.

The HM 230 experimental unit is used to investigate air flow in various ranges of velocity.

A radial fan with infinitely variable speed control draws in air from the environment. At the intake the air flow is accelerated in a measuring nozzle. Further down the measuring section the air flows through interchangeable measuring objects. Drawing in the air and the arrangement of the measuring objects on the intake side of the fan minimise turbulence when flowing into the measuring objects. All measuring objects are made of transparent material and provide excellent insight into the inner structure.

Pressure losses are studied in a pipe elbow, various pipe sections and a nozzle with sudden enlargement. The nozzle with gradual enlargement (de Laval nozzle) provides an introduction to the topic of transonic flow. The volumetric flow rate is measured in an orifice using a differential pressure manometer. The orifice is fitted with four interchangeable orifice disks for different measurement ranges. The fan's characteristic curve can also be recorded by using a throttle valve.

The measured values for volumetric flow rate, pressure and speed are displayed digitally.

Learning objectives/experiments

- pressure losses in pipes and pipe elbows
- flow in convergent/divergent nozzles
- supersonic flow in the de Laval nozzle
- determine the speed of sound in air
- compare calculation methods for incompressible and compressible flow
- use complete continuity equation
- determine mass flow rate using nozzle and volumetric
  flow rate using orifice
- record calibration curve for orifice
- record fan characteristic curve at different mass flow rates and speeds

HM 230
Flow of compressible fluids

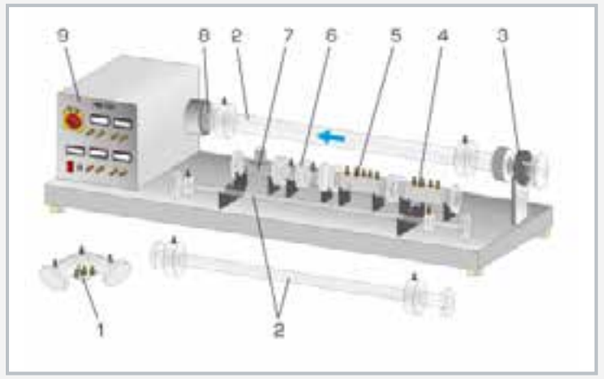

1 pipe elbow, 2 pipe section, 3 measuring nozzle, 4 nozzle with sudden enlargement, 5 nozzle with gradual enlargement (de Laval nozzle), 6 orifice, 7 throttle valve, 8 suction opening fan, 9 switch cabinet with display and control elements (integrated radial fan)

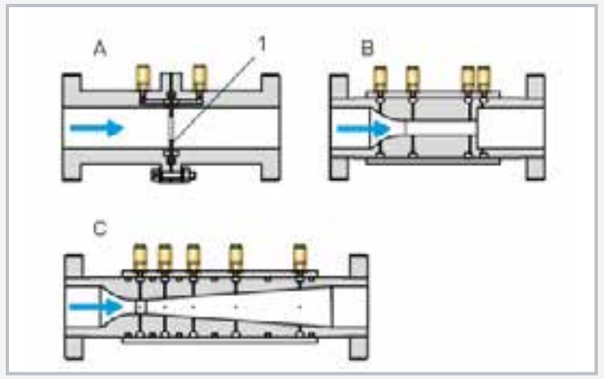

Measuring objects
A orifice, 1 interchangeable orifice disks, B nozzle with sudden enlargement, C nozzle with gradual enlargement (de Laval nozzle)

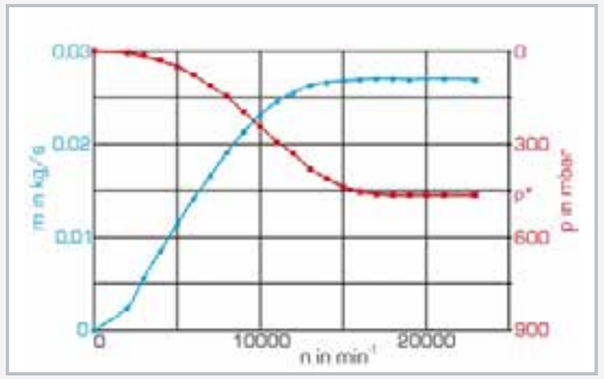

Experimental result "nozzle flow and critical pressure ratio", de Laval nozzle: blue: mass flow rate, red: negative pressure, black: speed; p* critical pressure

Specification

[1] investigate flow of compressible fluids
[2] subsonic and transonic air flow
[3] variable speed on the radial fan for adjusting the mass flow rate
[4] minimised turbulence by drawing in air and optimum arrangement of the measuring objects
[5] transparent measuring objects with connectors for pressure measurement provide insight into the internal structure
[6] measuring nozzle for determining the mass flow rate
[7] pressure losses in subsonic flow in pipe elbows and various pipe sections
[8] pressure curve at subsonic and transonic nozzle flow
[9] orifice for determining volumetric flow rate by differential pressure measurement
[10] record fan characteristic curve using a throttle valve
[11] digital displays for pressures, velocity and speed

Technical data

Radial fan
- max. speed: 31000min^{-1}
- max. volumetric flow rate: 226m^3/h
- max. head: 318mbar
- max. power consumption: 1,8kW

Measuring objects
- pipe section: 1m
  - Ø 16, 24, 34mm
- 90° pipe elbow
- 2 nozzles, inner diameter: 12...34mm
  - with sudden enlargement
  - with gradual enlargement (de Laval nozzle)
- orifice with orifice disks
  - Ø 12, 19, 25, 32mm
- throttle valve: Ø 34mm

Measuring ranges
- speed: 0...99999min^{-1}
- pressure:
  - 1x 0...25mbar
  - 1x 0...600mbar
  - 1x 0...1000mbar
- velocity: 0...65m/s

230V, 50Hz, 1 phase
120V, 60Hz, 1 phase, 230V, 60Hz, 1 phase
UL/CSA optional
LxWxH: 1750x600x390mm
Weight: approx. 58kg

Scope of delivery

1 experimental unit
1 set of measuring objects
1 set of tools
1 set of instructional material

Basic knowledge

Cavitation

When does cavitation occur?

When liquids flow, flow processes may cause local pressures that are smaller than the corresponding vapour pressure of the liquid. In this case, the liquid evaporates and vapour bubbles are formed. The increase in the volume caused by evaporation changes the flow patterns relative to the undisturbed flow. In pumps the vapour bubbles can grow to the extent that the remaining flow cross-section is greatly reduced and the performance of the pump is impaired. The process is often unstable since the flow velocity increases due to the reduction of the flow cross-section and thus cavitation is encouraged by further pressure loss.

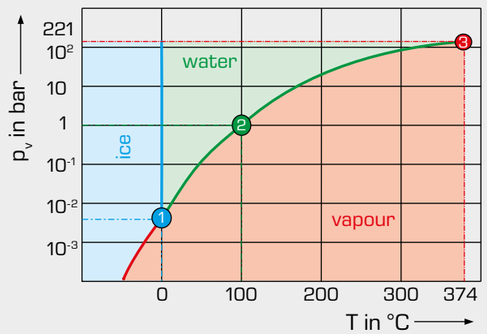

Temperature-pressure diagram of water

1 triple point, **2** boiling point, **3** critical point;
sublimation curve, boiling point curve, melting point curve

Formation of vapour bubbles due to cavitation at a pump impeller (HM 380)

Machine damage caused by cavitation

Considerable damage is caused by the erosion of the material that occurs in connection with cavitation. When the pressure re-increases the vapour bubbles implode. During the implosion a very rapid liquid jet forms in the vapour bubble, capable of generating pressure of several 1000 bar on impact with a solid material. This erodes the material of propellers, valve plates or impellers. Therefore especially hard and resistant materials must be used in machines subject to damage caused by cavitation.

Cavitation also often results in corrosion. Protective layers are removed and the roughened, porous surface provides ideal conditions for corrosion.

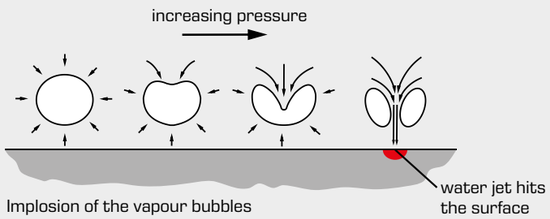

Implosion of the vapour bubbles

Pump impeller destroyed by cavitation erosion

Ship's propeller destroyed by cavitation erosion

Artificial generation of cavitation

The occurrence of cavitation can be clearly shown in a Venturi tube, such as GUNT's ST 250 device. The flow is accelerated in the convergent part, thereby reducing the pressure. When the vapour pressure p_v is exceeded, vapour bubbles are formed in the narrowest cross-section. Depending on the intensity, these disappear again in the divergent part or remain for a longer distance.

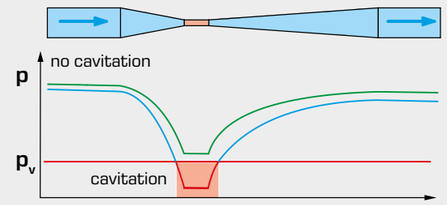

Cavitation in a Venturi tube

Criteria for the occurrence of cavitation

The criteria for the occurrence of cavitation are mainly the cavitation number and the required net suction head.

The dimensionless **cavitation number σ** is a means for measuring when cavitation occurs in a fluid.

$$\sigma = \frac{p - p_v}{\frac{\rho}{2} \cdot v^2}$$

ρ density, **p** pressure, p_v vapour pressure, **v** flow velocity

Another criterion is the NPSH value (Net Positive Suction Head). The NPSH value corresponds to the (pressure) energy of a liquid column under the present operating conditions at the connecting flange. The value is always positive.

A distinction is made between two NPSH values:

NPSHA (Net Positive Suction Head Available): This is the available system pressure at operating conditions as the height difference.

NPSHR (Net Positive Suction Head Required): This is the pressure required for operation of the pump as the height difference.

Here, the **system's NPSHA** must always be above the **pump's required NPSHR** value.

Avoiding cavitation

In order to avoid cavitation, the **cavitation number σ** must be kept as high as possible. On the other hand, a small cavitation number results in high energy efficiency and turbomachines with small dimensions.

The following measures reduce the tendency to cavitation:

- avoid low pressures
- avoid temperatures near the fluid's boiling point
- use thin blade profiles
- choose blades with low angle of attack
- avoid abrupt deflections of the flow
- round off the leading edge

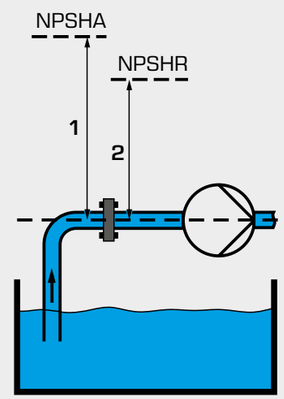

Difference between NPSHA (1) and NPSHR (2):

1 pressure energy provided by the system,
2 pressure energy required by the pump

HM 380
Cavitation in pumps

Description

- **visualisation of cavitation effects in a transparent pump**
- **continuously adjustable pump speed**
- **closed water circuit**

One of the most common causes of cavitation effects are fast moving objects in the water, such as the impellers of a centrifugal pump. If cavitation occurs on the impeller, the high mechanical stress sometimes results in separation or deformation of particles from the surface. In addition to the impeller geometry, intake pressure and temperature are also relevant for the occurrence of cavitation.

The HM 380 unit can be used to demonstrate cavitation effects on impellers of centrifugal pumps. Pump housing and the pipe at the inlet side of the pump are made of transparent plastic in order to visualise the cavitation processes. It is possible to capture excellent images of the vapour bubbles by taking photographs with short exposure times (flash).

In order to influence the flow velocity at the impeller blades, the speed can be changed within a wide range via a frequency converter. Valves at the inlet and outlet of the pump enable the flow rate and pressures to be adjusted accordingly.

Pressures on the inlet and outlet side are displayed on two manometers. Also displayed are the water temperature in the tank, flow rate and pump speed. The water temperature can be controlled and the tank is fitted with a heater. The water is cooled via the water supply.

Learning objectives/experiments

- formation of cavitation
- observation of cavitation effect
- how speed, inlet pressure, flow rate and temperature affect cavitation

HM 380
Cavitation in pumps

1 tank, 2 valve at inlet, 3 manometer at inlet, 4 transparent pump, 5 manometer at outlet, 6 digital displays for flow rate and speed, 7 valve at outlet, 8 temperature controller, 9 flow meter

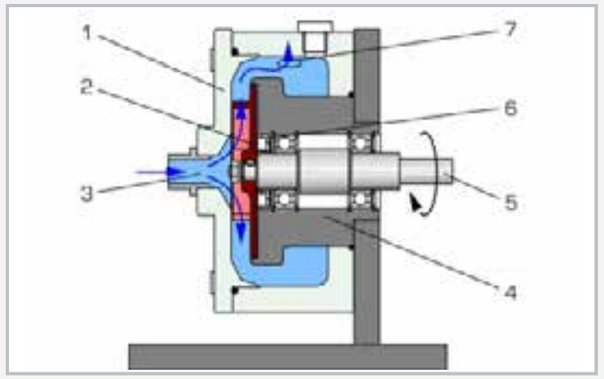

Section through the pump: 1 transparent housing with removable cover, 2 open impeller, 3 inlet, 4 bearing body, 5 drive shaft, 6 shaft seal, 7 outlet

Formation of vapour bubbles due to cavitation at the pump impeller

Specification

[1] visualisation of cavitation in centrifugal pumps
[2] transparent pump housing and pipe at the inlet side
[3] open impeller to observe the blades during operation
[4] continuously adjustable pump speed via frequency converter
[5] temperature control via heater and external cooling via water supply
[6] flow measurement using rotameter
[7] display of the pressures at inlet and outlet side of the pump via manometers
[8] digital display of speed, water temperature in the return and flow rate
[9] closed water circuit with tank and temperature display

Technical data

Centrifugal pump with drive motor
- power consumption: 0,37kW
- speed: 500...3300min^{-1}
- max. flow rate: 70L/min
- max. head: 13m

Tank: 20L

Measuring ranges
- pressure (inlet): -1...0bar
- pressure (outlet): 0...1,5bar
- temperature: 0...100°C
- flow rate: 10...140L/min

230V, 50Hz, 1 phase
LxWxH: 1000x630x590mm
Weight: approx. 65kg

Required for operation

water connection: approx. 100L/h
drain

Scope of delivery

1 experimental unit
1 set of hoses
1 set of instructional material

ST 250
Cavitation

Learning objectives/experiments

- function of a Venturi nozzle
- pressure as a function of the flow rate
- cavitation processes at different flow rates and pressures

Description

- **investigation of cavitation processes**
- **visualisation of the formation of vapour bubbles in a Venturi nozzle**

Cavitation refers to the formation of vapour bubbles in flowing fluids due to strong low pressure. As the flow velocity increases, the static pressure of the fluid falls to the vapour pressure and leads to the formation of vapour bubbles. The bubbles are carried along by the flow and implode if, with decreasing velocity, the static pressure rises above the vapour pressure of the fluid.

ST 250 is suitable for the demonstration of cavitation processes using the example of a Venturi nozzle. Pressure energy is converted into kinetic energy and vice versa in the Venturi nozzle. Vapour bubbles form in the narrowest cross-section.

To visualise the flow processes the experimental unit includes a Venturi nozzle made of transparent plastic. There are three pressure measuring points on the Venturi nozzle: at the inlet, at the narrowest point and at the outlet. The input pressure can be adjusted via a pressure reducing valve. The flow rate and the pressures can be adjusted via two ball valves which are located at the inlet and outlet of the pipe system.

The pressure distribution within the Venturi nozzle is shown on three manometers. The flow can be read off a rotameter. The temperature is measured directly upstream of the Venturi nozzle and is displayed on the thermometer.

ST 250
Cavitation

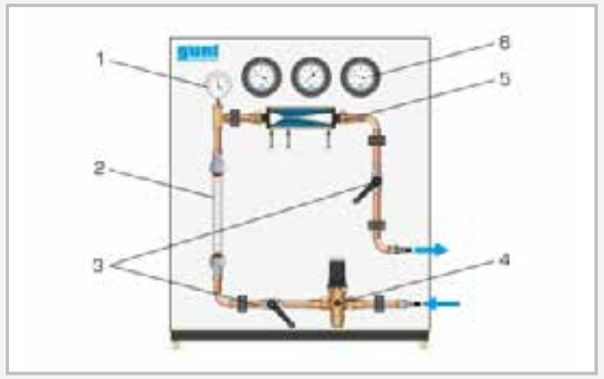

1 thermometer, 2 rotameter, 3 ball valves for flow adjustment, 4 pressure reducing valve, 5 Venturi nozzle, 6 manometer

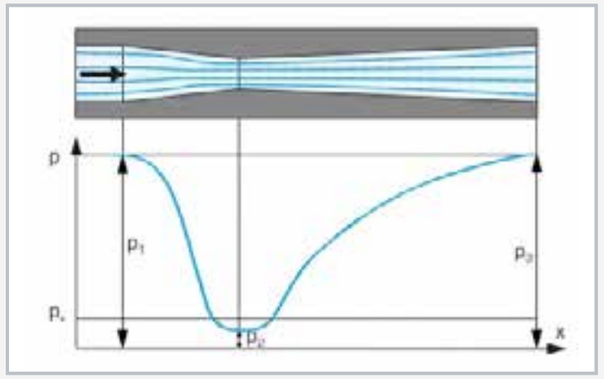

Representation of the pressure curve of a fluid flowing through a Venturi nozzle
p pressure, x distance, p_1 pressure at the inlet, p_2 pressure at the narrowest cross-section, p_3 pressure at the outlet, p_v vapour pressure

Specification

[1] investigation of cavitation processes in a Venturi nozzle
[2] Venturi nozzle with 3 pressure measuring points
[3] adjustment of the flow rate via ball valves
[4] pressure reducing valve, adjustable
[5] thermometer for measuring the temperature
[6] flow measurement using rotameter
[7] manometer for displaying the pressure curve in the Venturi nozzle

Technical data

Pressure reducing valve
- 0,5...2bar
- up to 70°C

Transparent Venturi nozzle
- cross-section of flow
  - inner diameter: 18mm
  - contraction: 10,5°
- output cross-section
  - inner diameter: 18mm
  - enlargement: 4°
- narrowest cross-section
  - inner diameter: 3,5mm

Measuring ranges
- pressure: -1...1,5bar
- temperature: 0...60°C
- flow rate: 0...1000L/h

LxWxH: 700x400x930mm
Weight: approx. 30kg

Required for operation

water connection: 4bar, drain

Scope of delivery

1 experimental unit
1 set of hoses
1 set of instructional material

HM 152
Potential flow

Description

- **two-dimensional, inviscid potential flow**
- **visualisation of streamlines**
- **flow around different models: drag bodies and changes in cross-section**
- **modelling the flow around bodies by overlaying the parallel flow and sources and / or sinks**
- **sources and sinks, individually or in combination**

The laminar, two-dimensional flow in HM 152 is a good approximation of the flow of ideal fluids: the potential flow. All physical systems described with the Laplace equation can be demonstrated with potential flow. This includes current and thermal flows as well as magnetic flux.

The core element of the HM 152 trainer is a classic Hele-Shaw cell with additional water connections for sources and sinks. The laminar, two-dimensional flow is achieved by water flowing at low velocity in a narrow gap between two parallel glass plates. The parallel flow generated in this way is non-vortical and can be regarded as potential flow.

Sources and sinks are generated via eight water connections in the bottom glass plate. The streamlines are displayed on the glass plate by injecting a contrast medium (ink).

In experiments the flow around bodies is demonstrated by inserting models into the parallel flow. Interchangeable models such as a cylinder, guide vane profile or nozzle contour are included.

To model the flow without models, it is possible to overlay parallel flow, sources, sinks and dipoles as required. This allows the demonstration of the formation of Rankine half-bodies.

The water flow rate and the quantity of contrast medium injected can be adjusted by using valves. The water connections are also activated by valves and can be combined as required.

Learning objectives/experiments

- visualisation of streamlines in
  - flow around drag bodies: cylinder, guide vane profile, square, rectangle
  - flow through models: nozzle contour, sudden contraction or enlargement
  - flow separation, flow with 90° deflection
- modelling the flow around bodies by overlaying parallel flow and sources and/or sinks
  - formation of Rankine half-bodies
  - demonstration of a dipole
- analogy between potential flow and other physical systems which are described by the Laplace equation

HM 152
Potential flow

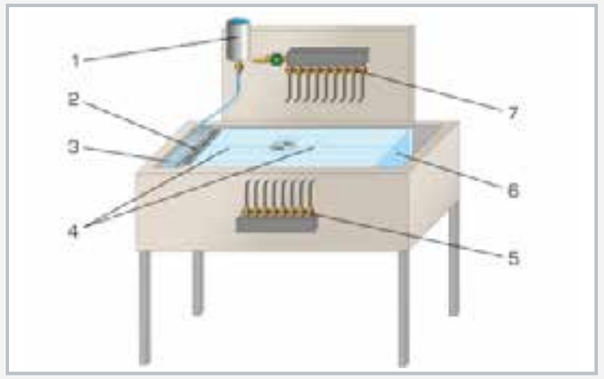

1 contrast medium, 2 nozzles for injecting the contrast medium, 3 water inlet, 4 Hele-Shaw cell with sources/sinks, 5 valves for sinks, 6 water outlet, 7 valves for sources

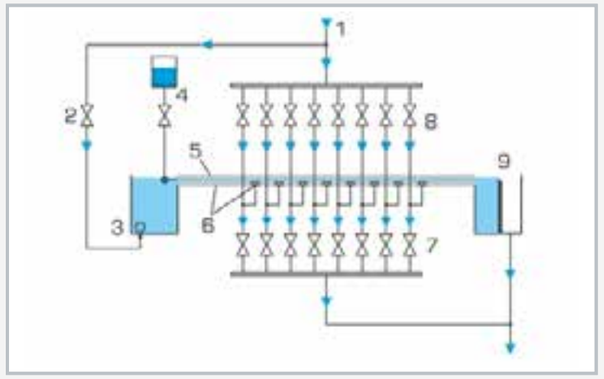

1 water inlet, 2 valve, adjusting the flow velocity, 3 tank, 4 contrast medium, 5 upper glass plate, 6 bottom glass plate with water connections (sources/sinks), 7 valves for sinks, 8 valves for sources, 9 water outlet

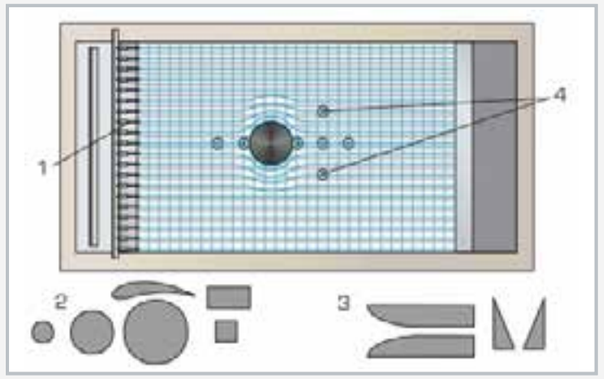

Flow around a cylinder: 1 injection of the contrast medium, 2 drag body, 3 models for changes in cross-section, 4 sources/sinks arranged in a cross shape

Specification

[1] demonstration of potential flow in a Hele-Shaw cell for visualising streamlines
[2] flow around supplied models: cylinder, square, rectangle, guide vane profile, various models for changes in cross-section
[3] modelling the flow around contours without models by overlaying parallel flow with sources or sinks
[4] water as flowing medium and ink as contrast medium
[5] Hele-Shaw cell made of two glass plates arranged in parallel with narrow gap
[6] upper glass plate, hinged for swapping models
[7] bottom glass plate with cross-shaped water connections for generating sources/sinks, can be combined as required
[8] grid in the bottom glass panel for optimal observation of the streamlines
[9] flow velocity, water inlet and water outlet in sources/sinks as well as dosage of the contrast medium can be adjusted by using valves

Technical data

2 glass plates, LxW: 910x585mm
- distance between the plates: 5mm
- bottom glass plate with eight water connections for sources/sinks

Models
- 6 drag bodies
- 2 changes in cross-section
- material: rubber
- thickness: 5mm

Injection of the contrast medium (ink)
- 19 nozzles

Tank for contrast medium: 200mL

LxWxH: 1350x700x1380mm
Weight: approx. 119kg

Required for operation

water connection 300L/h, drain

Scope of delivery

1 trainer
1 set of models (drag bodies, changes in cross-section)
1L ink
1 set of instructional material

HM 133
Visualisation of flow fields

Description

- **visualisation of flow fields and streamlines by using electrolytically generated hydrogen bubbles**
- **illuminated experimental section**
- **different models: drag bodies and changes in cross-section**
- **investigations in laminar and turbulent flow**

Fine gas bubbles are perfectly suited to visualising flow fields. Due to Reynolds scaling, many flow processes that occur in air can also be demonstrated by experiments in water.

The experimental unit HM 133 can be used to visualise laminar and turbulent flow processes in a water channel. Hydrogen bubbles are generated electrolytically at a cathode made of thin platinum wire. A stainless steel plate is used as an anode. Small bubbles that detach from the platinum wire are easily carried along by the flow due to their small size.

An interchangeable model is used in the shallow water channel and flow travels around and through it. White LED illumination is located along the experimental section on the walls of the water channel. The indirect illumination results in a high-contrast image.

The experiments run with a low flow velocity. Flow separation and vortex formation are clearly visible. Different drag bodies or changes in cross-sections are used as models, e.g. cylinder, aerofoil profile and rectangle. A flow straightener and a layer of glass spheres ensure a smooth and low-turbulence flow. The power for the electrolysis, its pulse and pause duration and the flow velocity in the water channel can all be adjusted.

Learning objectives/experiments

- visualisation of two-dimensional flows
- streamline course in flow around and through models
- flow separation
- vortex formation, demonstration of Karman vortices
- qualitative observation of the velocity distribution in laminar and turbulent flow
- analogy to air flow

HM 133
Visualisation of flow fields

1 display and control unit, 2 water channel with LED illumination along the experimental section, 3 anode, 4 flow straightener, 5 mount for cathode, 6 mount for model; arrow shows the direction of flow

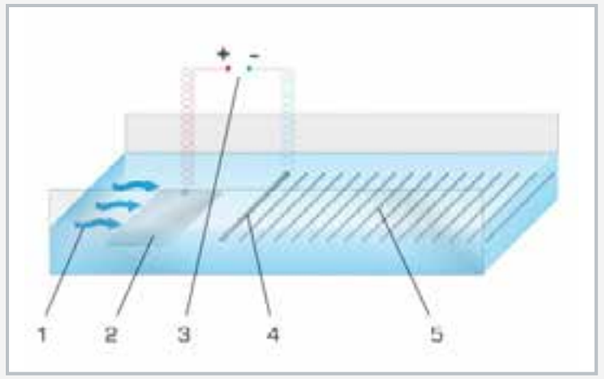

Principle of electrolytic generation of hydrogen bubbles
1 water inlet, 2 anode, 3 power source, 4 cathode, 5 diffusion of bubble fronts (pulsed)

When flowing around a cylinder, Karman vortices form behind the model; arrow shows the direction of flow

Specification

[1] visualisation of flow fields by using electrolytically generated hydrogen bubbles
[2] platinum wire as cathode and stainless steel plate as anode for electrolysis
[3] shallow water channel fitted with indirect LED illumination along the experimental section
[4] various models are included: aerofoil, rectangle, straight plate, curved plate, cylinder (various sizes), various models for changes in cross-section
[5] flow straightener and glass spheres ensure consistent and low-turbulence flow
[6] different flow velocities via variable-speed circulating pump
[7] setting power (with display), pulse and pause duration of the power and the flow velocity in the water channel

Technical data

Pump with adjustable speed
- max. flow rate: 20L/min

Bubble generator
- current: 0...200mA
- pause: 8,4...1800ms
- pulse: 8,4...1800ms
- 3 cathodes with platinum wire
  - Ø 0,2mm
  - length 30, 50, 75mm
- anode, stainless steel plate, L-shaped

Water channel: approx. 6L
Experimental section: LxWxH: 550x150x50mm
Illumination: white LEDs on the side walls of the water channel

230V, 50Hz, 1 phase
230V, 60Hz, 1 phase; 120V, 60Hz, 1 phase
UL/CSA optional
LxWxH: 900x300x220mm (experimental unit)
LxWxH: 410x400x170mm (display and control unit)
Weight: approx. 24kg

Scope of delivery

1 experimental unit
1 display and control unit
3 cathodes
1 set of models (drag bodies, changes in cross section)
1 set of instructional material

HM 226
Wind tunnel for visualisation of streamlines

Description

- **wind tunnel with fog generator**
- **various models included**
- **illuminated experimental section with sight window**
- **low-turbulence flow**

Streamlines can be visualised in steady flow in the wind tunnel by using fog, smoke or tufts. In this way, a clear impression of an instantaneous flow field can be presented and problematic flow areas, such as stall, can be shown.

The experimental unit HM 226 is an open wind tunnel, in which streamlines, flow separation and turbulence can be made visible by using fog. The evaporated fog fluid is non-toxic, water soluble and the precipitate does not affect common materials. Precipitates can be easily wiped off with a cloth.

The air flow is generated by a fan. To achieve a low-turbulence flow, the air flows through a stabilisation chamber with a flow straightener. Fog is added to the flowing air through several nozzles. Then the air flows around or through a model in a experimental section and the flow field becomes visible. The experimental section has a black background and a sight window; additional lighting makes the streamlines clearly visible.

Four interchangeable models (cylinder, orifice plate, aerofoil and guide vane profile) are included. The aerofoil's angle of attack is adjustable.

Learning objectives/experiments

- visualisation of streamlines
- flow around or through differently shaped models
- flow separation and turbulence
- stall as a function of the angle of attack

HM 226
Wind tunnel for visualisation of streamlines

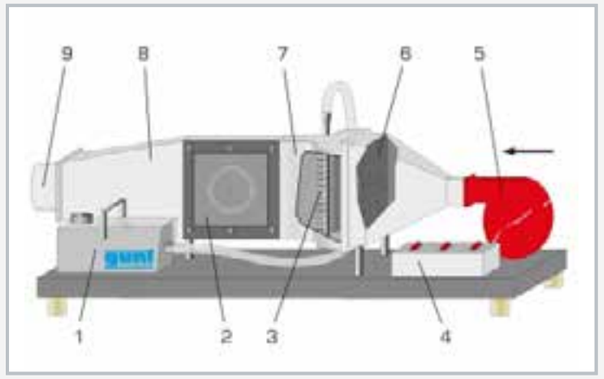

1 fog generator, 2 experimental section with sight window, 3 distributor for fog with nozzles, 4 switch cabinet, 5 radial fan, 6 stabilisation chamber with flow straightener, 7 intake contour in nozzle design, 8 diffuser, 9 air outlet

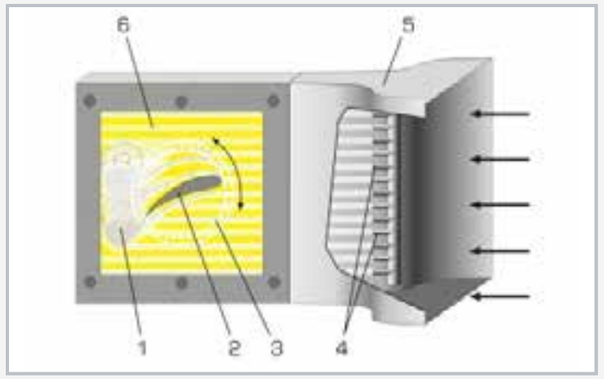

detailed view of the experimental section
1 turbulence, 2 model, 3 scale for adjusting the angle of attack, 4 nozzles for injecting fog, 5 intake contour in nozzle design, 6 illuminated experimental section

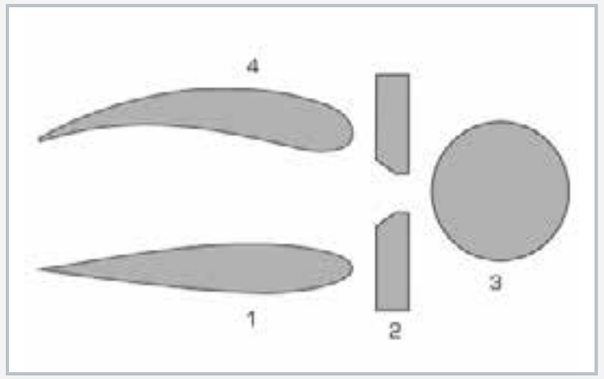

1 aerofoil, 2 orifice plate, 3 cylinder, 4 guide vane profile

Specification

[1] visualisation of streamlines flowing around and through different models
[2] open wind tunnel with radial fan and a fog generator
[3] operation with non-toxic and water-soluble fog fluid
[4] illuminated experimental section with sight window and black background
[5] low-turbulence flow through stabilisation chamber with flow straightener
[6] distributor with nozzles for injecting the fog
[7] four different models, angle of attack at aerofoil and guide vane profile adjustable
[8] scale for displaying the angle of attack

Technical data

Experimental section
- transparent area: 252x252mm
- cross-section: 252x42mm
- aerofoil pivotable by 360°

Models
- cylinder: diameter: 60mm, height: 24,5mm
- aerofoil: 15x24,5x100mm
- guide vane profile: 20x24,5x100mm
- orifice plate: 2x 25x24,5x10mm
  - orifice opening: 10mm

Radial fan
- max. volumetric air flow rate: 480m^3/h
- max. pressure difference: 300Pa

Fog generator
- power consumption: 700W

230V, 50Hz, 1 phase
230V, 60Hz, 1 phase
LxWxH: 1400x500x490mm
Weight: approx. 50kg

Scope of delivery

1 experimental unit
1 fog generator
1 set of models
1 fog fluid (5L)
1 hose
1 set of tools
1 set of instructional material

HM 241 Fundamentals of water flow

HM 241 is suitable for conducting basic experiments in the field of incompressible flow. This tabletop demonstrator only requires a small amount of space, is simple to use and offers particularly illustrative experiments thanks to the transparent design. The measured values are displayed on a PC. The experimental unit does not require a water connection.

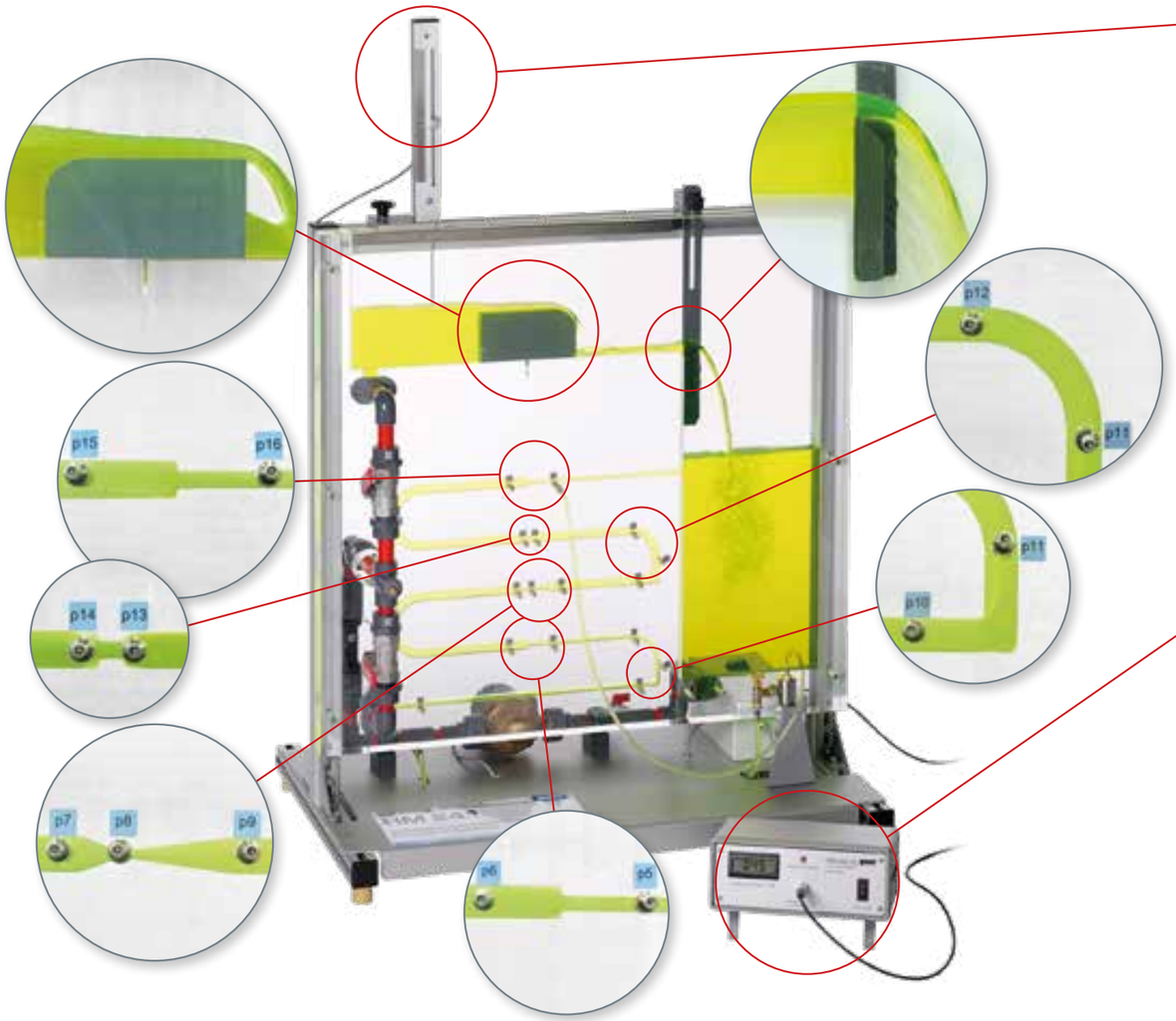

The water level in the open channel is measured with the electronic level gauge. The level gauge can be attached at any point on the side wall of the duct. The water level is determined by means of a sliding probe. The position of the probe can either be read directly from the scale on the level gauge or displayed digitally on the main unit.

The power meter HM 240.02 measures the power consumption of the pump and allows the calculation of the pump characteristic. The power is determined by real-time-multiplication of current and voltage. The power determination does not depend on the waveform of the plot.

The series includes extensive experiments on the subject of pipe flow and open-channel flow.

All major pipe elements such as:

- straight pipe sections, pipes with different cross-sections
- pipe bends, pipe angles
- enlargements, contractions
- nozzles, orifices

are clearly displayed in a compact space.

Open-channel flow and its main effects such as:

- overfall over the weir
- supercritical flow

can be seen especially well in the transparent open channel.

Software for data acquisition

The GUNT software included in the scope of delivery displays the measurement results and assists in the evaluation of the experiments.

The instructional material includes a detailed introduction to the fundamental principles of fluid mechanics.

HM 241
Fundamentals of water flow

Learning objectives/experiments

- fundamentals of pipe flow and open-channel flow
- differential pressure measurement at the orifice, Venturi nozzle, pipe bends and pipe angles, contraction and enlargement
- investigation of weir structures in an open channel in conjunction with the power meter HM 240.02
- recording a pump characteristic

Description

- **water flow in open channels**
- **experiments on pipe flow**
- **closed water circuit**

In the field of fluid mechanics of incompressible fluids a distinction can be made between pipe flow and open-channel flow. With sufficient pressure and flow velocity in the completely filled pipe, the flow is considered as one-dimensional for reasons of simplicity. Due to this precondition physical phenomena can easily be described and calculated. Open-channel flow in contrast is always multi-dimensional.

The compact HM 241 experimental unit enables a variety of experiments on the fundamentals of incompressible flow in open channels and pipes.

A pump supplies water from the storage tank through the supply line into the open channel or the pipe. The flow processes are clearly visible since all parts are made of transparent plastic.

In the pipe section the water flows through an orifice, a Venturi nozzle, a contraction, an enlargement as well as pipe bends and pipe angles of varying diameters. The open channel has a broad-crested weir and a sharp-crested weir. A valve is used to close off or open up the two different working sections.

A pressure sensor is located on the device for differential pressure measurement. This sensor can be connected to the measuring points in the pipe via a hose. The supply line contains a flow rate sensor to determine the flow rate.

The measured values are transmitted directly to a PC via USB. The GUNT software is included and clearly displays the results of the experiments.

The water level is determined with an electronic water level gauge.

The power meter HM 240.02 is required to measure the power consumption of the pump.

HM 241
Fundamentals of water flow

1 level gauge, 2 open channel, 3 shut-off valve, 4 pump, 5 pressure sensor, 6 storage tank, 7 pipe section with pressure measuring points, 8 sharp-crested weir, 9 broad-crested weir

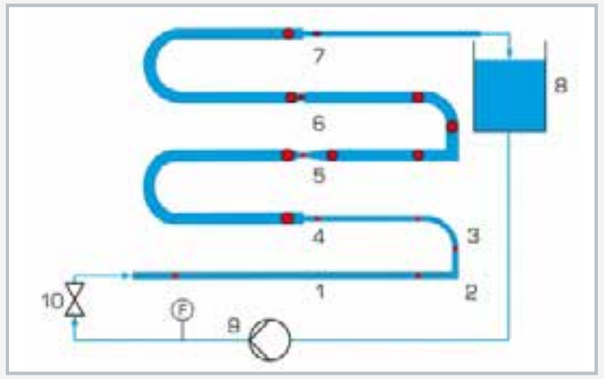

Pressure losses in pipes: 1 straight pipe section, 2 90° pipe angle, 3 90° pipe bend, 4 sudden enlargement, 5 Venturi nozzle, 6 orifice plate, 7 sudden contraction, 8 storage tank, 9 pump, 10 shut-off valve; F flow, red: pressure measuring points

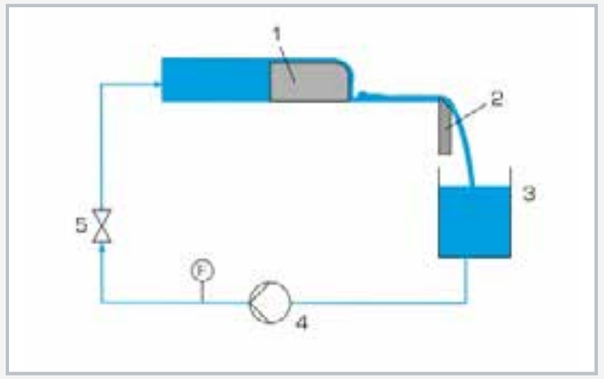

Open-channel flow: 1 broad-crested weir, 2 sharp-crested weir, 3 storage tank, 4 pump, 5 shut-off valve; F flow

Specification

[1] investigation of the fundamentals of different areas of incompressible flow
[2] closed water circuit with pump
[3] transparent pipe section and open channel
[4] experiments on pressure losses at pipe bends and pipe angles, Venturi nozzle, orifice plate
[5] one broad-crested weir and one sharp-crested weir
[6] horizontally travelling level gauge with vertically travelling probe tip to measure the water levels
[7] pressure measuring points for differential pressure measurement before and after the respective pipe resistances
[8] measurement of the power consumption of the pump with power meter HM 240.02
[9] GUNT software for data acquisition via USB under Windows 7, 8.1, 10

Technical data

Pump, 3 stages
- max. power consumption: 100W
- max. flow rate: 83L/min
- max. head: 6m

Electronic water level gauge
- measuring range: 0...200mm
- graduation: 1mm
- travel: max. 205mm

Measuring ranges
- differential pressure: 0...600mbar
- flow rate: 3,5...50L/min

230V, 50Hz, 1 phase
230V, 60Hz, 1 phase
120V, 60Hz, 1 phase
UL/CSA optional
LxWxH: 850x540x970mm
Weight: approx. ca. 50kg

Required for operation

PC with Windows

Scope of delivery

1 experimental unit
2 weirs
1 set of tools
1 electronic water level gauge
1 CD with GUNT software + USB cable
1 set of instructional material

Basic knowledge

Fundamentals of thermodynamics

Thermodynamics is the general theory of energy and material transformation processes: Work is performed by redistributing energy between its different manifestations. The fundamentals of thermodynamics were developed from the study of volume, pressure, and temperature in steam engines. The topics are selected based on the devices listed in this chapter.

Thermodynamic systems and principles

- **system:**
  area of the thermodynamic examination
- **surroundings:**
  area outside the system
- **system boundaries:**
  separation of the system from its surroundings
- **process:**
  external impacts on the system
- **state:**
  collectivity of measurable properties within the system
- **state variables:**
  all measurable properties of the system that can be used to describe its state
- **change of state:**
  effect a process has on the state

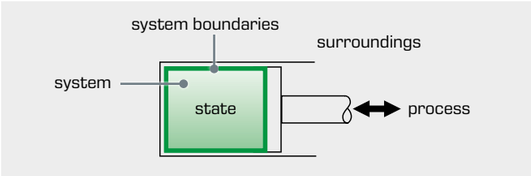

Open system

Energy or mass can be exchanged with the surroundings outside the system boundaries

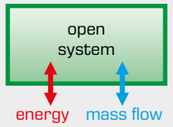

The energy content of the mass flow changes

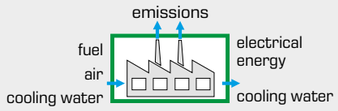

Example: thermal power plant

Closed system

No mass crosses the system boundary

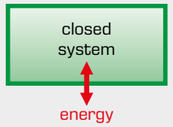

The internal system energy increases

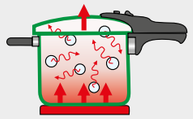

Example: pressure cooker

Isolated system

Neither mass nor energy cross the system boundaries

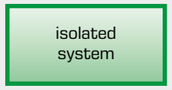

no exchange

The energy is constant

Thermodynamic energy conversion can take place inside the system.

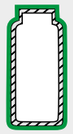

Example: an ideal thermos flask

1st law of thermodynamics:
Energy can neither be created nor destroyed, it can only be transformed.
In relation to the three systems the transfer of energy in the form of heat or work has the following effect:

2nd law of thermodynamics:
All natural and technical processes are irreversible.

The second law places a limitation on the first law because, in reality, some energy will dissipate into the surroundings during every process. This energy can neither be used nor transformed back.

For the example of the pressure cooker this means that, after the inside of the cooker has warmed up, the heat in the cooker cannot flow back into the heating plate.

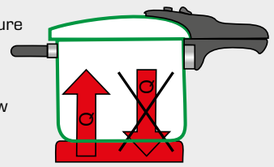

Thermodynamic state variables and functions

State variables are the measurable properties of a system. To describe the state of a system at least two independent state variables such as **pressure (p), temperature (T), volume (V)** or amount of **substance (n)** must be given. From this, the **state functions** can be derived.

- **internal energy (U):** the thermal energy of a static, closed system. When external energy is added, processes result in a change of the internal energy.
  ΔU = Q+W
  - **Q:** thermal ener gy added to the system,
  - **W:** mechanical work done on the system that results in an addition of heat
- **enthalpy (H):** defined as the sum of internal energy plus work **p ×V**
  H = U+p ×V
- **entropy (S)**: provides information on the order in a system and the associated arrangement options of particles in that system
  The change in entropy **dS** is known as **reduced heat**.
  $dS = \delta Q_{rev}/T$
  - **δQ_{rev}:** reversible heat change
  - **T:** absolute temperature

Change of state of gases

In physics, an idealised model of a real gas was introduced to make it easier to explain the behaviour of gases. This model is a highly simplified representation of the real states and is known as an "ideal gas". Many thermodynamic processes in gases in particular can be explained and described mathematically with the help of this model.

Equation of state for ideal gases:
p × V = m × Rs × T

- **m**: mass
- **Rs**: spec. gas constant of the corresponding gas

Changes of state of an ideal gas:

Change of state	Isochoric	Isobaric	Isothermal	Isentropic	Isenthalpic
Condition	V = constant	p = constant	T = constant	S = constant	H = constant
Result	dV = 0	dp = 0	dT = 0	dS = 0	dH = 0
Law	p/T = constant	V/T = constant	p ×V = constant	$p \times V^{\kappa}$ = constant κ = isentropic exponent	p ×V = constant

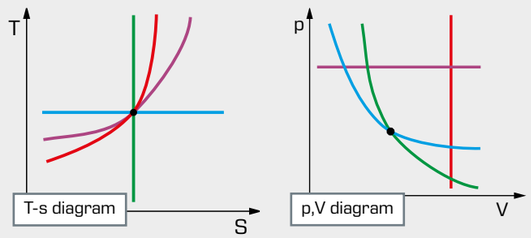

Changes of state can be clearly illustrated in diagrams.

Basic knowledge

Fundamentals of thermodynamics

Heat transport

The heat is transported in two ways that are physically fundamentally different:

- **substance-specific transport**
  through conduction and convection
- **non-substance-specific transport**
  through thermal radiation

Material-specific transport

Convection:
Heat transport in flowing liquids or gases due to flow of matter.

Where forced convection occurs, the flow is forced by external forces.

- examples: a pump in a warm water heater, fans in a PC.

If the flow is caused by differences in density due to different temperatures within the fluid, this is called free or natural convection.

- examples: water movement when heated in a pot, by a foehn wind, the gulf stream, or a vent in a chimney.

The figure depicts free convection: the air molecules heated by the fire rise due to differences in density.

Conduction:
heat transport through direct interaction between molecules (e.g. collision of molecules) within a solid or a fluid at rest.

The figure shows that the heat in the poker is transferred from the fire to the glove through interaction of the molecules.

The amount of heat that is transported depends on the material, the length, the cross-section, the exposure time and the temperature difference between the two ends of the thermal conductor.

Heat transport without matter

Thermal radiation (or temperature radiation): energy transport through electromagnetic vibration in a specific wavelength range.

In the figure you can see how electromagnetic vibrations that occur in the fire are released in all directions as thermal radiation.

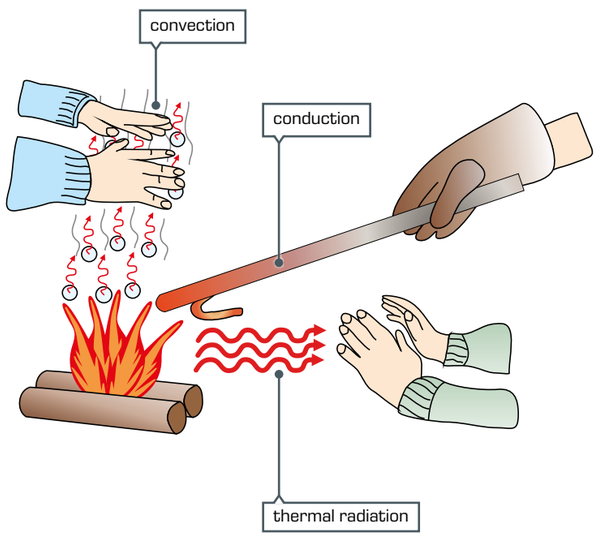

Phase transition

A gaseous, liquid or solid state in a homogeneous system of substances is called a phase. The phase depends on the thermodynamic state variables pressure **p** and temperature **T**.

The conversion from one phase to another is called a phase transition:

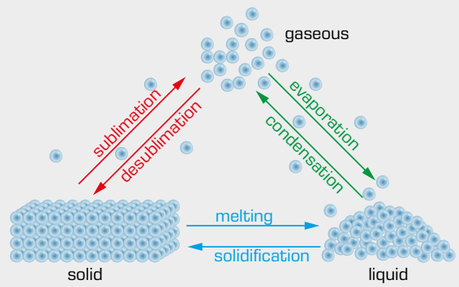

Above the critical point **3** the gaseous and liquid phases of some systems of substances, e. g. water, cannot be differentiated anymore. The physical properties of the fluid lie somewhere between the two phases: The density corresponds to the density of the liquid phase, the viscosity to that of the gaseous phase. This phase is known as the "supercritical" phase. In this phase, the fluid can neither evaporate nor condense.

Another particularity in some systems of substances, such as water, is known as the triple point **1**. At this point the solid, liquid and gaseous phase are in equilibrium. All six phase changes occur simultaenously.

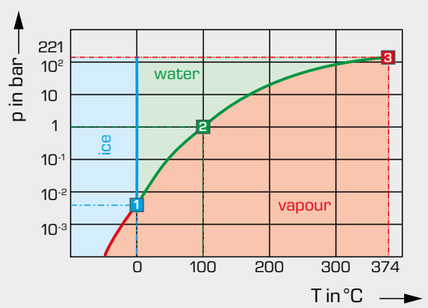

Temperature-pressure diagram of water

1 triple point, **2** boiling point, **3** critical point;
sublimation curve, boiling point curve,
melting point curve

Evaporation process

We distinguish between ideal gas, real gas and vapour.

In an ideal gas, pressure and volume are exactly inversely proportional, in a real gas only by approximation. In a vapour, the pressure changes only slightly with the volume, depending on the degree of saturation. In the case of water, vapour is also called steam.

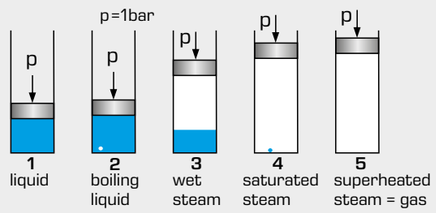

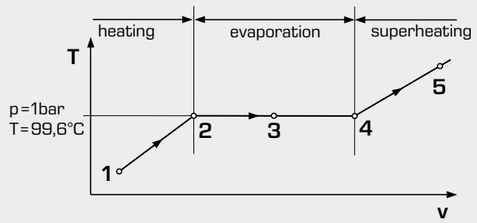

Evaporation of water: change of state when heating water under constant pressure **p** = 1bar

T temperature, **v** specific volume;
1 liquid, **2** boiling liquid, **3** unsaturated (wet) steam,
4 saturated steam, **5** superheated steam (gas)

In a closed system filled with liquid, a thermodynamic equilibration sets in between the liquid and its vaporised phase. This state is called the saturation state. The prevailing pressure is referred to as vapour pressure, in case of water steam pressure or saturated steam pressure, and the temperature is known as saturation temperature. The vapour pressure curve can be derived from both. This curve is shown in the phase diagram of water.

WL 102
Change of state of gases

Description

- **isothermal and isochoric change of state of air**
- **GUNT software for acquisition, processing and display of measured data**

Gas laws belong to the fundamentals of thermodynamics and are dealt with in every training course on thermodynamics.

The WL 102 experimental unit enables two changes of state to be studied experimentally: isothermal change of state, also known as the Boyle-Mariotte law, and isochoric change of state, which occurs at constant volume. Transparent tanks enable the change of state to be observed. Air is used as the test gas.

In the first tank, positioned on the left, the hermetically enclosed air volume is reduced or increased using a compressor and hydraulic oil. This results in an isothermal change of state. The compressor can also operate as a vacuum pump. If the changes occur slowly, the change of state takes place at an almost constant temperature.

In the second tank, positioned on the right, the temperature of the test gas is increased by a controlled electric heater and the resulting pressure rise is measured. The volume of the enclosed gas remains constant. Temperatures, pressures and volumes are measured electronically, digitally displayed and transferred to a PC for processing.

Learning objectives/experiments

- demonstrating the laws of state changes in gases experimentally
- isothermal change of state, Boyle-Mariotte law
- isochoric change of state, Gay-Lussac's 2nd law

WL 102
Change of state of gases

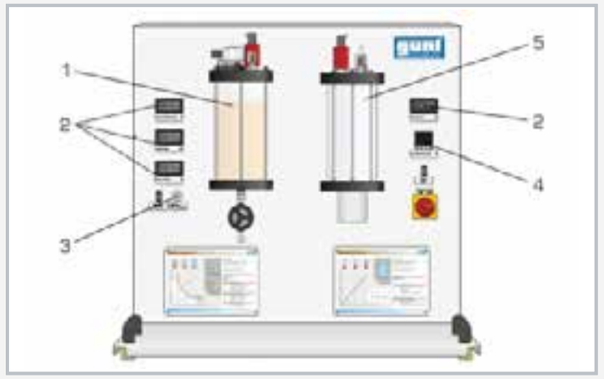

1 tank 1 for isothermic change of state, 2 digital displays, 3 5/2-way valve for switching between compression and expansion, 4 heating controller, 5 tank 2 for isochoric change of state

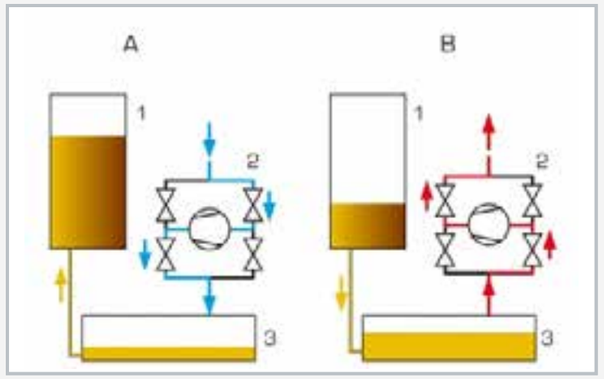

Representation of the change of volume
1 oil-filled tank for isothermic change of state, 2 valve arrangement with compressor, 3 storage tank; A compression (blue), B expansion (red)

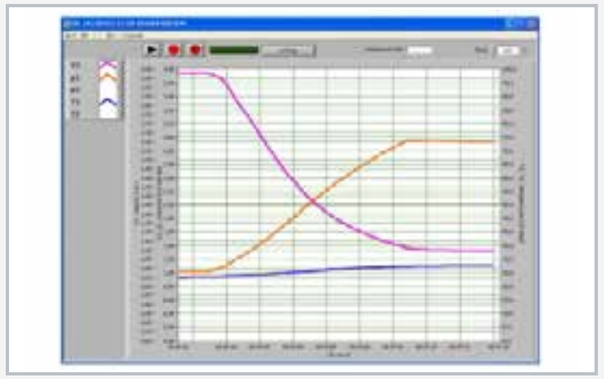

Software screenshot: charts for isothermic compression

Specification

[1] experimental investigation of gas laws
[2] transparent measuring tank 1 for investigation of isothermic change of state
[3] hydraulic oil filling for changing volume of test gas
[4] built-in compressor generates necessary pressure differences to move the oil volume
[5] compressor can also be used as vacuum pump
[6] 5/2-way valve for switching between compression and expansion
[7] transparent measuring tank 2 for investigation of isochoric change of state
[8] electrical heater with temperature control in tank 2
[9] sensors and digital displays for temperatures, pressures and volumes
[10] GUNT software for data acquisition via USB under Windows 7, 8.1, 10

Technical data

Compressor / vacuum pump
- power output: 60W
- pressure at inlet: 213mbar
- pressure at outlet: 2bar

Temperature controller: PID, 300W, limited to 80°C

Measuring ranges
- temperature:
  - tank 1: 0...80°C
  - tank 2: 0...80°C
- pressure:
  - tank 1: 0...4bar abs.
  - tank 2: 0...2bar abs.
- volume:
  - tank 1: 0...3L

230V, 50Hz, 1 phase
230V, 60Hz, 1 phase; 120V, 60Hz, 1 phase
UL/CSA optional
LxWxH: 900x550x900mm
Weight: approx. 50kg

Required for operation

PC with Windows recommended

Scope of delivery

1 experimental unit
1 GUNT software CD + USB cable
1 set of instructional material

ET 351C
Thermodynamics of the refrigeration circuit

Description

- **compression refrigeration system for thermodynamic investigations**
- **indirectly heated evaporator and water-cooled condenser**
- **open compressor with pendulum bearing drive motor for torque measurement**

In this trainer, great care was taken to make the thermodynamic processes in the refrigeration system as transparent as possible. The capacities of compressor, evaporator and condenser can be measured. Pressure and temperature measuring points are located at all the relevant locations to also allow for the pressure and heat losses in a refrigeration system to be investigated in detail.

The refrigeration circuit of ET 351C contains an open compressor with variable speed, a water-cooled condenser, a thermostatic expansion valve and an evaporator heated by a hot water circuit.

The compressor is driven via a pendulum bearing motor with frequency converter for speed adjustment. A force transducer permits the measuring of the drive torque. Using the speed the mechanical drive power of the compressor can thus be determined. The electrical heating power of the hot water circuit can be freely adjusted and is displayed. The condenser capacity is measured via the cooling water flow.

The measured values can be read on digital displays. At the same time, the measured values can also be transmitted directly to a PC via USB. The data acquisition software is included. The software allows for the process to be represented in the log p-h diagram and displays the key characteristic variables of the process, e.g. compressor pressure ratio and coefficient of performance.

Learning objectives/experiments

- cyclic process in the log p-h diagram
- comparison of the real cyclic process and the ideal cyclic process
- balances at the evaporator and condenser
- calculation of the motor power via speed and torque
- determination of losses
- calculation of the coefficient of performance
- operating behaviour under load
- non-steady-state operating behaviour

ET 351C
Thermodynamics of the refrigeration circuit

1 expansion valve, 2 evaporator, 3 refrigerant flow meter, 4 pressure switch, 5 process schematic, 6 receiver, 7 hot water circuit of the evaporator, 8 drive motor, 9 compressor, 10 cooling water flow meter, 11 condenser, 12 displays and controls

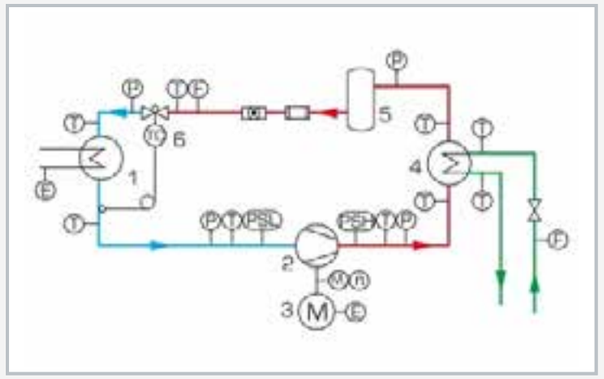

1 evaporator, 2 compressor, 3 drive motor, 4 condenser, 5 receiver, 6 expansion valve; P pressure, T temperature, M_d torque, n speed, E electrical power; PSL, PSH pressure switch; blue: low pressure, red: high pressure, green: cooling water

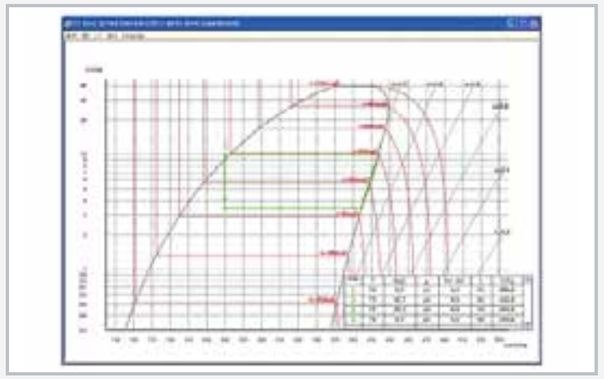

Software screenshot: log p-h diagram

Specification

[1] thermodynamic investigation of a refrigeration circuit
[2] refrigeration circuit with open compressor, water-cooled condenser, thermostatic expansion valve and indirectly heated evaporator
[3] compressor drive with speed-controlled motor via V-belt
[4] motor on pendulum bearing for torque measurement
[5] tube evaporator with hot water circuit as cooling load
[6] water-cooled coaxial coil heat exchanger as condenser
[7] displays for temperature, pressure, flow rate, speed, torque and power at the equipment
[8] GUNT software for data acquisition via USB under Windows 7, 8.1, 10
[9] refrigerant R134a, CFC-free

Technical data

Open compressor
- refrigeration capacity: approx. 550W (at a speed of 500min^{-1} and -10/20°C)
- motor: 550W, 1400min^{-1}

Heater: 1x 1000W
Condenser
- capacity: 1300W

Measuring ranges
- temperature: 9x -30...100°C, 1x 0...100°C
- pressure: 1x -1...9bar, 1x -1...24bar, 2x -1...15bar
- torque (compressor): 0...10Nm
- speed (compressor): 0...2500min^{-1}
- power consumption (compressor): 0...1125W
- power (heater): 0...1125W
- flow rate (water): 5...70g/s
- flow rate (refrigerant): 0...0,5L/min

230V, 50Hz, 1 phase
230V, 60Hz, 1 phase
LxWxH: 1520x790x1760mm
Weight: approx. 120kg

Required for operation

water connection, drain
PC with Windows recommended

Scope of delivery

1 trainer
1 set of hoses, 1 manual pump
1 GUNT software CD + USB cable
1 set of instructional material

WL 204
Vapour pressure of water - Marcet boiler

Learning objectives/experiments

- recording the vapour pressure curve of water
- presentation of the relationship between pressure and temperature in a closed system
- temperature and pressure measurement

Description

- **recording the vapour pressure curve of water**
- **saturation pressure of water vapour as a function of the temperature**

In a closed system filled with fluid, a thermodynamic equilibrium sets in between the fluid and its vaporised phase. The prevailing pressure is called vapour pressure. It is substance-specific and temperature-dependent.

When a fluid is heated in a closed tank, the pressure increases as the temperature rises. Theoretically, the pressure increase is possible up to the critical point at which the densities of the fluid and gaseous phases are equal. Fluid and vapour are then no longer distinguishable from each other. This knowledge is applied in practice in process technology for freeze drying or pressure cooking.

The WL 204 experimental unit can be used to demonstrate the relationship between the pressure and temperature of water in a straightforward manner. Temperatures of up to 200°C are possible for recording the vapour pressure curve. The temperature and pressure can be continuously monitored via a digital temperature display and a Bourdon tube pressure gauge.

A temperature limiter and pressure relief valve are fitted as safety devices and protect the system against overpressure.

WL 204
Vapour pressure of water - Marcet boiler

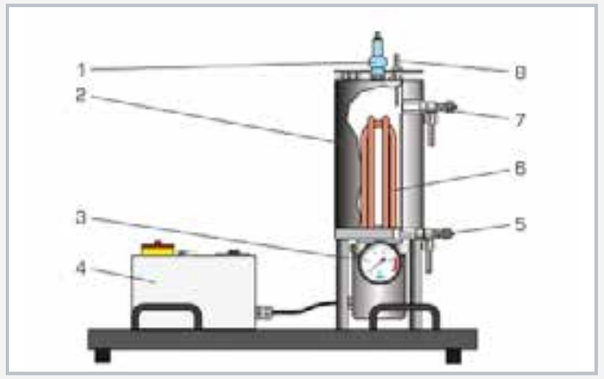

1 safety valve, 2 pressure boiler with insulating jacket, 3 Bourdon tube pressure gauge, 4 switch cabinet with temperature display, 5 drain valve, 6 heater, 7 overflow, 8 temperature sensor

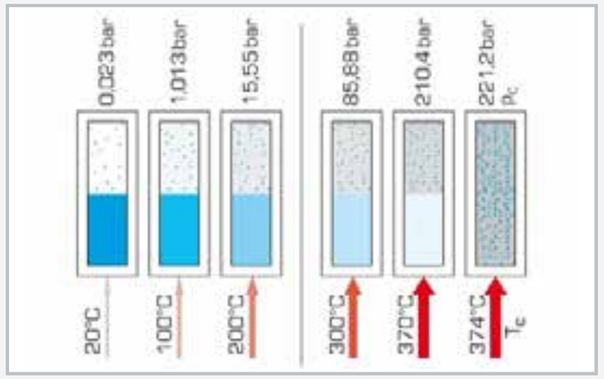

Heating up water in a closed tank: the pressure and temperature increase proportionally up to the critical point, at which fluid and vapour are no longer distinguishable from each other; critical point at T_c=374°C, p_c=221bar, dotted line: temperature limit of the experimental unit

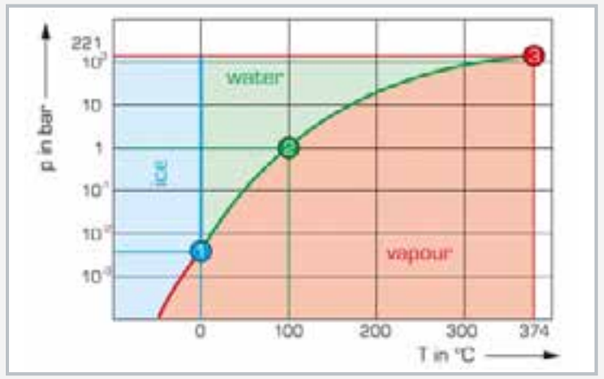

Temperature-pressure diagram of water
red: sublimation curve, green: boiling point curve, blue: melting point curve; 1 triple point, 2 boiling point, 3 critical point

Specification

[1] measuring a vapour pressure curve for saturated vapour
[2] pressure boiler with insulating jacket
[3] temperature limiter and safety valve protect against overpressure in the system
[4] Bourdon tube pressure gauge to indicate pressure
[5] digital temperature display

Technical data

Bourdon tube pressure gauge: -1...24bar
Temperature limiter: 200°C
Safety valve: 20bar
Heater: 2kW
Boiler, stainless steel: 2L

Measuring ranges
- temperature: 0...200°C
- pressure: 0...20bar

230V, 50Hz, 1 phase
230V, 60Hz, 1 phase
120V, 60Hz, 1 phase
UL/CSA optional
LxWxH: 600x400x680mm
Weight: approx. 35kg

Scope of delivery

1 experimental unit
1 funnel
1 set of tools
1 set of instructional material

WL 440
Free and forced convection

Learning objectives/experiments

- free and forced convection
- calculation of convective heat transfer at different geometries
  - flat plate
  - cylinder
  - tube bundle
- experimental determination of the Nusselt number
- calculation of typical characteristic variables of heat transfer
  - Nusselt number
  - Reynolds number
- investigation of the relationship between flow formation and heat transfer during experiments
- description of transient heating process

Description

- **free and forced convection using the example of various heating elements**
- **functions of the GUNT software: educational software, data acquisition, system operation**
- **part of the GUNT-Thermoline: Fundamentals of heat transfer**

Convection is one of the three basic forms of heat transfer. Material-bound heat transport takes place. During convection the fluid is in motion.

The WL 440 offers basic experiments for targeted teaching on the topic of free and forced convection on various heating elements.

At the heart of the experimental unit is a vertical air duct into which various heating elements are inserted.

An axial fan is located on top of the air duct. The fan draws in ambient air and guides it through the air duct. The air flows past a heating element and absorbs heat. Four heating elements with different geometries are available to be selected. In order to investigate free convection, two of the four heating elements can be operated outside of the air duct. The heating elements are designed in such a way to release heat only at their surface. The compact design ensures rapid heating and a short time for experiments.

The experimental unit is equipped with temperature sensors at the inlet and outlet of the air duct. The air velocity is measured to determine the air flow rate. Heating power and flow rate are adjusted and displayed via the software.

The microprocessor-based instrumentation is well protected in the housing. The GUNT software consists of a software for system operation and for data acquisition and an educational software. With explanatory texts and illustrations the educational software significantly aids the understanding of the theoretical principles. The unit is connected to the PC via USB.

WL 440
Free and forced convection

1 fan, 2 sight window, 3 air inlet, 4 hand-held meter for temperature, 5 heating element

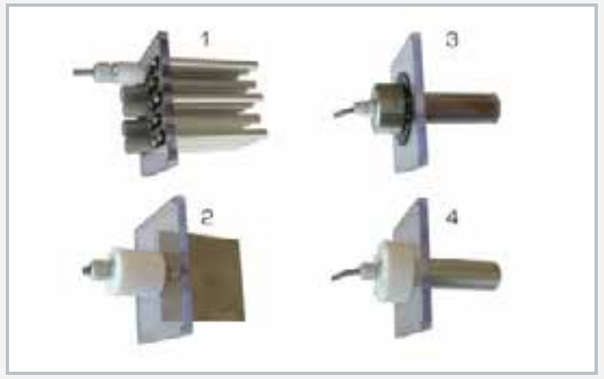

Various interchangeable heating elements: 1 tube bundle, 2 plane plate, 3 cylinder with heating foil to examine the local heat transfer, 4 cylinder with an even temperature at the surface

User interface of the powerful GUNT software

Specification

[1] investigate heat transfer in the air duct by forced convection
[2] study of free convection
[3] air duct with axial fan
[4] 4 heating elements with different geometries
[5] continuously adjustable heating and fan power
[6] display of temperatures, heating power and air velocity in the software
[7] due to integrated microprocessor-based instrumentation no additional devices with error-prone wiring are required
[8] functions of the GUNT software: educational software, data acquisition, system operation
[9] GUNT software for data acquisition via USB under Windows 7, 8.1, 10

Technical data

Air duct
- flow cross-section: 120x120mm
- height: approx. 0,6m

Heating elements, temperature limitation: 90°C
- tube bundle
  - number of tubes: 23
  - one tube in variable postion is heated
  - heating power: 20W
  - heat transfer area: 0,001m^2
- cylinder with an even temperature at the surface
  - heating power: 20W
  - heat transfer area: 0,0112m^2
- plate
  - heating power: 40W
  - heat transfer area: 2x 0,01m^2
- cylinder with heating foil to investigate the local heat transfer
  - heating power: 40W
  - heat transfer area: 0,0112m^2

Axial fan
- max. flow rate: 500m^3/h
- max. pressure difference: approx. 950Pa
- power consumption: 90W

Measuring ranges
- air velocity: 0...10m/s
- temperature: 4x 0...325°C
- heating power: 0...50W

230V, 50Hz, 1 phase
230V, 60Hz, 1 phase; 120V, 60Hz, 1 phase
UL/CSA optional
LxWxH: 670x350x880mm; Weight: approx. 25kg

Required for operation

PC with Windows

Scope of delivery

1 experimental unit
1 GUNT software CD + USB cable
1 set of instructional material

WL 372
Radial and linear heat conduction

Description

- **investigation of heat conduction in solid bodies**
- **linear and radial heat conduction**
- **GUNT software for displaying temperature profiles**

Heat conduction is one of the three basic forms of heat transfer. Kinetic energy is transferred between neighbouring atoms or molecules. The heat transport is material-bound. This type of heat transfer is an irreversible process and transports heat from the higher energy level, i.e. higher absolute temperature, to the lower level with lower temperature. If the heat transport is maintained permanently by means of the supply of heat, this is called steady heat conduction. The most common application of heat conduction in engineering is in heat exchangers.

The WL 372 experimental unit can be used to determine basic laws and characteristic variables of heat conduction in solid bodies by way of experiment. The experimental unit comprises a linear and a radial experimental setup, each equipped with a heating and cooling element. Different measuring objects with different heat transfer properties can be installed in the experimental setup for linear heat conduction. The experimental unit includes with a display and control unit.

Sensors record the temperatures at all relevant points. The measured values are read from digital displays and can be transmitted simultaneously via USB directly to a PC, where they can be analysed using the software included.

Learning objectives/experiments

- linear heat conduction (plane wall)
  - determination of temperature profiles for different materials
  - determination of the temperature profile in case of a disturbance
  - determination of the thermal conductivity λ
- radial heat conduction
  - determination of the temperature profile
  - determination of the thermal conductivity λ

WL 372
Radial and linear heat conduction

1 experimental setup for linear heat conduction, 2 experimental setup for radial heat conduction, 3 measuring object, 4 display and control unit

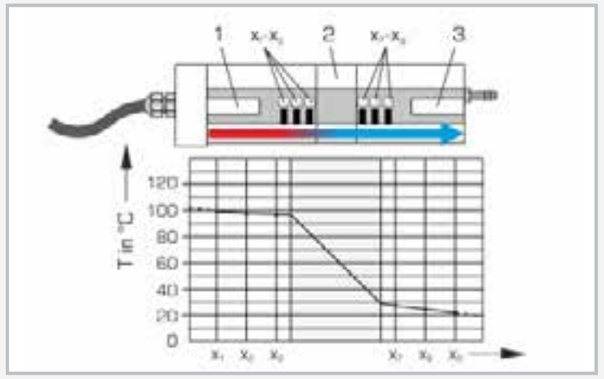

Experimental setup for linear heat conduction with graphic representation of the temperature profile: 1 heater, 2 measuring object, 3 cooling element; x_1-x_3 and x_7-x_9: measuring points

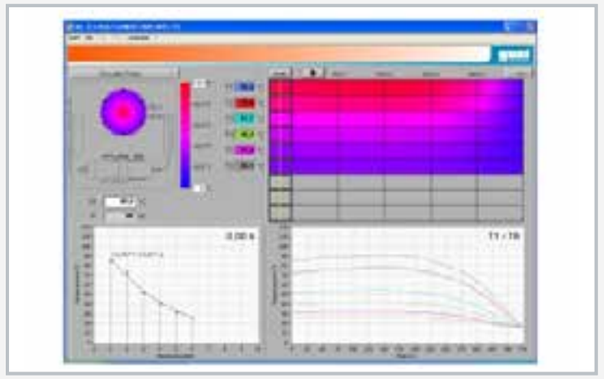

Software screenshot: temperature profile for radial heat conduction

Specification

[1] investigation of heat conduction in solid bodies
[2] experimental setup consisting of experimental unit and display and control unit
[3] linear heat conduction: 3 measuring objects, heating and cooling element, 9 temperature measuring points
[4] radial heat conduction: brass disc with heating and cooling element, 6 temperature measuring points
[5] cooling by means of tap water
[6] electrical heating element
[7] representation of the temperature profiles with GUNT software
[8] GUNT software for data acquisition via USB under Windows 7, 8.1, 10

Technical data

Linear heat conduction
- 3 measuring objects, insulated
- 1x DxL: 25x30mm, steel
- 1x DxL: 15x30mm, brass
- 1x DxL: 25x30mm, brass
- heater: 140W

Radial heat conduction
- disc DxL: 110x4mm
- heater in the centre of the disc: 125W
- cooling coil on the outer edge of the disc

Measuring ranges
- temperature: 0...100°C
- power: 0...200W

230V, 50Hz, 1 phase
230V, 60Hz, 1 phase
120V, 60Hz, 1 phase
UL/CSA optional
LxWxH: 400x360x210mm (experimental unit)
LxWxH: 470x380x210mm (display and control unit)
Total weight: approx. 22kg

Required for operation

water connection, drain
PC with Windows recommended

Scope of delivery

1 experimental unit
1 display and control unit
1 set of measuring objects
1 set of hoses
1 GUNT software CD + USB cable
1 set of instructional material

Series WL 110
Heat exchanger with supply unit

Teaching the fundamentals of heat transfer through experiments

Clear, simple, reliable, progress tracking

WL 110 Heat exchanger supply unit with the WL 110.03 Shell & tube heat exchanger

The supply unit can accommodate four different types of heat exchangers

Perfect educational concept: modular, flexible, versatile

WL 110.20 Water chiller for WL 110

The cold water needed for all the experiments is usually supplied from a laboratory tap. However when the ambient temperature in the laboratory is too high, the water chiller is recommended for reasonable experimental conditions.

Hot water is also needed for the experiments. It is supplied from the service unit WL 110.

Software for data acquisition

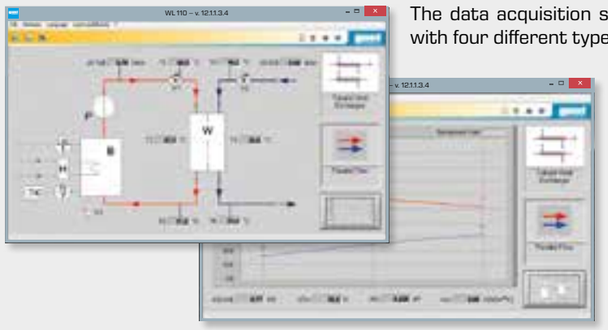

The data acquisition software supports the complete range of experiments with four different types of heat exchangers.

- temperature curves along the heat exchanger
- selectable parallel flow or counterflow operation
- calculation of heat flows
- calculation of mean heat transfer coefficient
- calculation of efficiency

Convenient connection to any computer via USB.

Interchangeable accessories

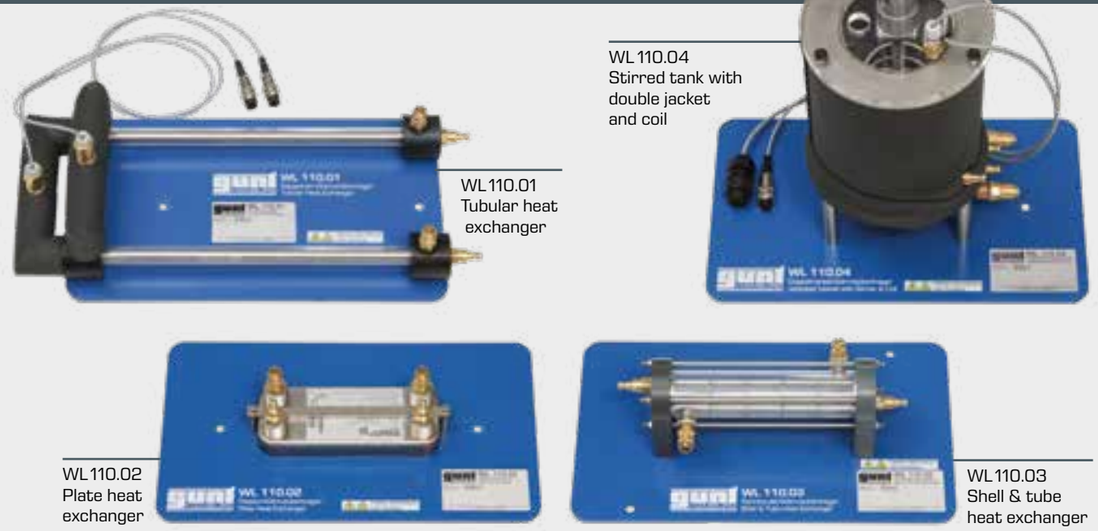

Learning objectives

- function and behaviour during operation of different heat exchangers
- plotting temperature curves
  - in parallel flow operation
  - in counterflow operation
- calculation of mean heat transfer coefficient
- comparing different heat exchanger types

Didactic advantages:
ideally suited for student-centered experiments

A small group of 2 to 3 students can independently and conveniently go through the various experiments.

The lecturer can demonstrate characteristic aspects of heat exchangers in front of a bigger audience when using the data acquisition software and a video projector connected to a PC.

The well-structured instructional material sets out the fundamentals and provides a step-by-step guide through the experiments..

WL 110
Heat exchanger supply unit

Description

- **supply unit for different heat exchangers (WL 110.01-WL 110.04)**
- **heat exchanger operation in parallel flow or counterflow possible**

Heat exchangers transfer thermal energy from the flow of one medium to another. The two flows do not come into direct contact with one another. Efficient heat transfer is a prerequisite for economical processes. Therefore, different heat exchanger types are used in practice depending on the requirements.

This experimental unit can be used to investigate and compare different heat exchanger designs. The complete experimental setup consists of two main elements: WL 110 as supply and control unit and choice of heat exchanger: Tubular heat exchanger (WL 110.01), plate heat exchanger (WL 110.02), shell and tube heat exchanger (WL 110.03) and stirred tank with jacketed vessel and coil (WL 110.04). Water is used as the medium.

The heat exchanger to be investigated is connected to the supply unit. The hot water flows through the heat exchanger. Part of the thermal energy of the hot water is transferred to the cold water.

Reversing the water connections changes the direction of flow and thus allows parallel flow or counterflow operation.

The main function of the WL 110 is to provide the required cold and hot water circuits. To do this, the supply unit is equipped with a heated tank and pump for the hot water circuit, connections for the cold water circuit and a switch cabinet with displays and controls. A temperature controller controls the hot water temperature. The flow rate in the hot water and cold water circuit is adjusted using valves. The cold water circuit can be fed from the laboratory mains or the WL 110.20.

The GUNT software consists of a software for data acquisition and an educational software. With explanatory texts and illustrations the educational software significantly aids the understanding of the theoretical principles. With the aid of an authoring system, the teacher can create further exercises.

Sensors record the temperatures and flow rates. The measured values are read from digital displays and can be transmitted simultaneously via USB directly to a PC where they can be analysed using the software.

Learning objectives/experiments

- in conjunction with a heat exchanger (WL 110.01 to WL 110.04)
  - plotting temperature curves
  - determining the mean heat transfer coefficient
  - comparing different heat exchanger types

WL 110
Heat exchanger supply unit

1 temperature controller, 2 temperature displays, 3 flow rate displays, 4 stirred tank with jacketed vessel and coil WL 110.04, 5 cold water circuit connections, 6 process schematic, 7 hot water tank

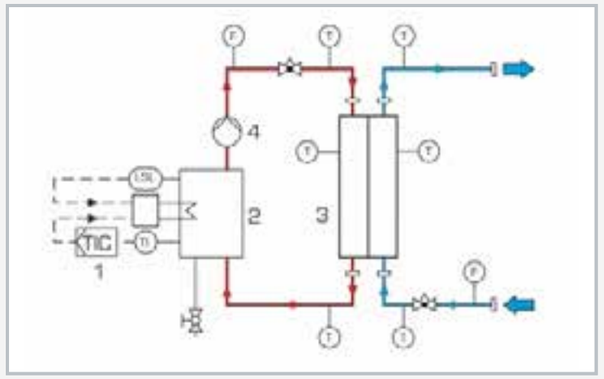

1 temperature controller, 2 heated tank, 3 heat exchanger (WL 110.01 to WL 110.04 accessories), 4 pump; red: hot water circuit, blue: cold water circuit; F flow rate, T temperature

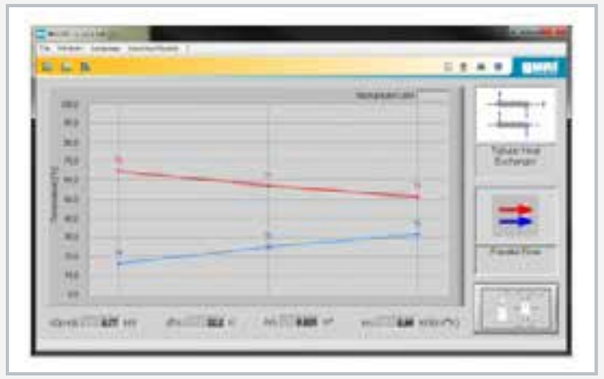

Software screenshot: temperature curve for WL 110.01 in parallel flow operation

Specification

[1] supply unit for heat exchangers
[2] hot water circuit with tank, heater, temperature controller, pump and protection against lack of water
[3] cold water circuit from laboratory mains or water chiller WL 110.20
[4] temperature controller controls the temperature of hot water
[5] flow adjustable using valves
[6] digital displays for 6 temperature and 2 flow rate sensors
[7] water connections with quick-release couplings
[8] stirring machine connection with speed adjustment (WL 110.04)
[9] functions of the GUNT software: educational software and data acquisition
[10] GUNT software for data acquisition via USB under Windows 7, 8.1, 10

Technical data

Pump
- power consumption: 120W
- max. flow rate: 600L/h
- max. head: 30m

Heater
- power output: 3kW
- thermostat: 0...70°C

Hot water tank: approx. 10L

Measuring ranges
- temperature: 6x 0...100°C
- flow rate: 2x 20...250L/h

230V, 50Hz, 1 phase
230V, 60Hz, 1 phase; 230V, 60Hz, 3 phases
UL/CSA optional
LxWxH: 1000x670x550mm
Weight: approx. 60kg

Required for operation

WL 110.20 or cooling water, drain
PC with Windows recommended

Scope of delivery

1 experimental unit
1 CD with authoring system for GUNT educational software
1 GUNT software CD + USB cable
1 set of instructional material

WL 110.01
Tubular heat exchanger

Description

- **tubular heat exchanger for connection to WL 110 supply unit**
- **visible flow channel due to transparent outer tube**

Tubular heat exchangers represent the simplest type of heat exchangers and are the preferred solution for transferring heat with high pressure differences or between high viscosity media (e.g. sludge). An advantage is the uniform flow through the tube space. This space is free of flow dead zones.

The WL 110.01 is part of a series of units enabling experiments to be performed on different heat exchanger types. The experimental unit is ideally suited for investigating the functioning and behaviour of a tubular heat exchanger in operation.

The WL 110.01 is connected to the supply unit WL 110 using quick-release couplings. Hot water flows through the inner tube and cold water through the outer tube. Part of the thermal energy of the hot water is transferred to the cold water. Valves on the supply unit are used to adjust the flow rates of hot and cold water. The supply hose can be reconnected using quick-release couplings, allowing the flow direction to be reversed. This allows parallel flow or counterflow operation. Temperature sensors for measuring the inlet and outlet temperatures are located at the supply connections on the WL 110. There are two additional temperature sensors on the tubular heat exchanger for measuring the temperature after half of the transfer section.

During experiments, temperature curves are plotted and displayed graphically. Additionally, the measured values can be recorded and processed using data acquisition software. The mean heat transfer coefficient is then calculated as a characteristic variable.

Learning objectives/experiments

- in conjunction with WL 110 supply unit
  - function and behaviour during operation of a tubular heat exchanger
  - plotting temperature curves:
    in parallel flow operation
    in counterflow operation
  - calculation of mean heat transfer coefficient
  - comparison with other heat exchanger types

WL 110.01
Tubular heat exchanger

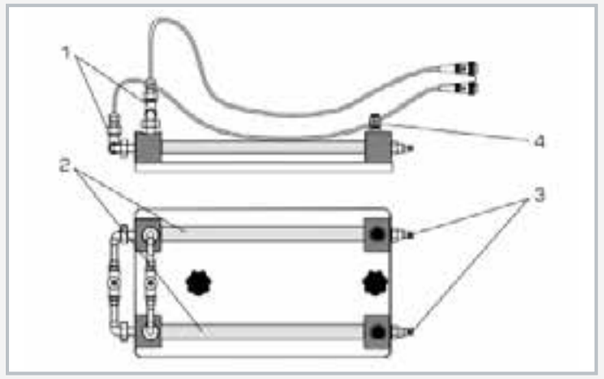

1 temperature sensor, 2 concentric tubes, 3 hot water connections, 4 cold water connections

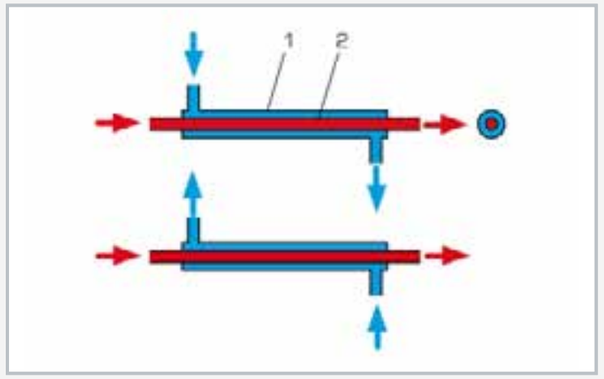

Functional principle of tubular heat exchanger
1 outer tube with cold water, 2 inner tube with hot water; red: hot water, blue: cold water

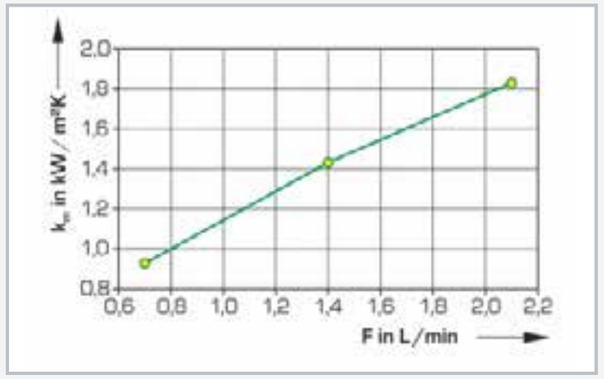

Mean heat transfer coefficient k_m as function of flow rates cold water and hot water

Specification

[1] tubular heat exchanger for connection to WL 110
[2] hot and cold water supply from WL 110
[3] parallel flow and counterflow operation possible
[4] recording of temperature using WL 110 and two additional temperature sensors for measuring the central temperature

Technical data

Heat transfer surfaces
- mean transfer surface: 250cm²

Inner tube, stainless steel
- outer diameter: 12mm
- wall thickness: 1mm

Outer tube, transparent (PMMA)
- outer diameter: 20mm
- wall thickness: 2mm

Measuring ranges
- temperature: 2x 0...100°C

LxWxH: 480x230x150mm
Weight: approx. 4kg

Scope of delivery

1 tubular heat exchanger

WL 110.02
Plate heat exchanger

Description

■ **plate heat exchanger for connection to WL 110 supply unit**

The key feature of plate heat exchangers is their compact design, in which optimum use is made of all of the material for heat transfer. The pressed in profile on the plates creates narrow flow channels, in which significant turbulence occurs. The turbulent flow allows effective heat transfer even with low flow rates and also has a self-cleaning effect. Plate heat exchangers are used in the food industry, offshore technology, refrigeration and domestic engineering.

The WL 110.02 is part of a series of units enabling experiments to be performed on different heat exchanger types. The experimental unit is ideally suited for investigating the functioning and behaviour of a plate heat exchanger in operation.

The WL 110.02 is connected to the supply unit WL 110 using quick-release couplings. The plate heat exchanger is made up of profiled plates with water flowing through the spaces between them. The plates are soldered in such a way that two separate flow channels are formed. These are one "cold" and one "hot" flow channel, in an alternating arrangement. Part of the thermal energy of the hot water is transferred to the cold water. Valves on the supply unit are used to adjust the flow rates of hot and cold water. The supply hose can be reconnected using quick-release couplings, allowing the flow direction to be reversed. This allows parallel flow or counterflow operation. The temperature sensors for measuring the inlet and outlet temperature are located at the supply connections on the WL 110.

During experiments, temperature curves are plotted and displayed graphically. Additionally, the measured values can be recorded and processed using data acquisition software. The mean heat transfer coefficient is then calculated as a characteristic variable.

Learning objectives/experiments

■ in conjunction with WL 110 supply unit
- function and behaviour during operation of a plate heat exchanger
- plotting temperature curves:
  in parallel flow operation
  in counterflow operation
- calculation of mean heat transfer coefficient
- comparison with other heat exchanger types

WL 110.02
Plate heat exchanger

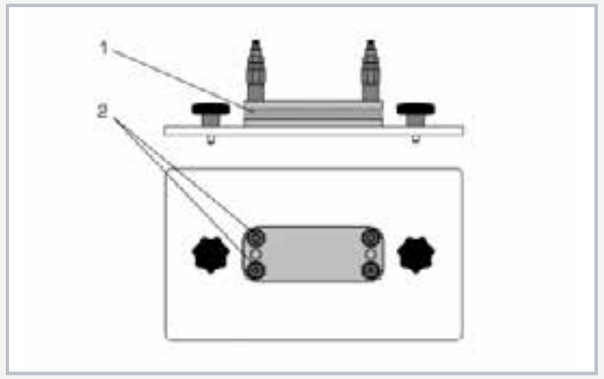

1 plates, 2 water connections

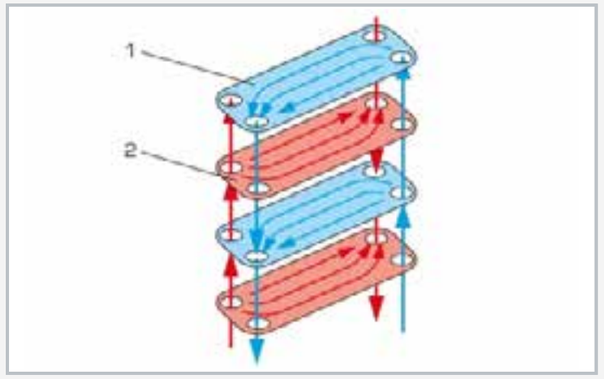

1 plate with cold water, 2 plate with hot water; red: hot water, blue: cold water

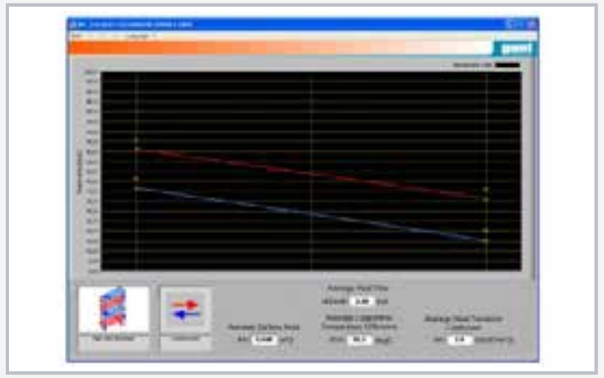

Software screenshot: temperature curve in counterflow operation

Specification

[1] plate heat exchanger for connection to WL 110
[2] hot and cold water supply from WL 110
[3] parallel flow and counterflow operation possible
[4] six soldered plates
[5] recording of temperature using WL 110

Technical data

6 plates, stainless steel
Heat transfer surface: 480cm^2

LxWxH: 400x230x85mm
Weight: approx. 3kg

Scope of delivery

1 plate heat exchanger

WL 110.03
Shell & tube heat exchanger

2E

Description

- **shell and tube heat exchanger for connection to WL 110 supply unit**
- **media flowing in cross-flow**

Shell and tube heat exchangers are in widespread use. The main advantages of this design are the large heat transfer surface and the compact design. Shell and tube heat exchangers are used in the chemical and pharmaceutical industries, in refineries and in process engineering plants.

The WL 110.03 is part of a series of units enabling experiments to be performed on different heat exchanger types. The experimental unit is ideally suited for investigating the functioning and behaviour of a shell and tube heat exchanger in operation.

The WL 110.03 is connected to supply unit WL 110 using quick-release couplings. The shell and tube heat exchanger consists of seven tubes, surrounded by a transparent outer shell. The hot water flows through the tube space and the cold water through the space in the shell. Part of the thermal energy of the hot water is transferred to the cold water. Baffle plates are used to deflect the flow in the shell in such a way as to create greater turbulence and thus a more intensive transfer of heat. The media flows in a cross-flow. Valves on the supply unit are used to adjust the flow rates of hot and cold water. The supply hose can be reconnected using quick-release couplings, allowing the flow direction to be reversed. This allows cross parallel flow or cross counterflow operation. Temperature sensors for measuring the inlet and outlet temperature are located at the supply connections on the WL 110.

During experiments, temperature curves are plotted and displayed graphically. Additionally, the measured values can be recorded and processed using data acquisition software. The mean heat transfer coefficient is then calculated as a characteristic variable.

Learning objectives/experiments

- in conjunction with WL 110 supply unit
  - function and behaviour during operation of shell and tube heat exchanger
  - plotting temperature curves:
    in cross parallel flow operation
    in cross counterflow operation
  - calculation of mean heat transfer coefficient
  - comparison with other heat exchanger types

WL 110.03
Shell & tube heat exchanger

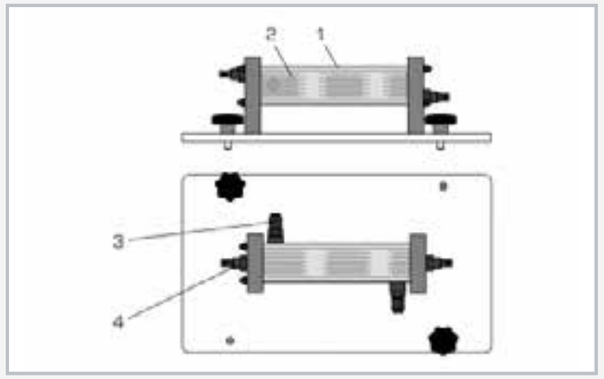

1 transparent shell, 2 tube bundle, 3 shell water connection, 4 tube bundle water connection

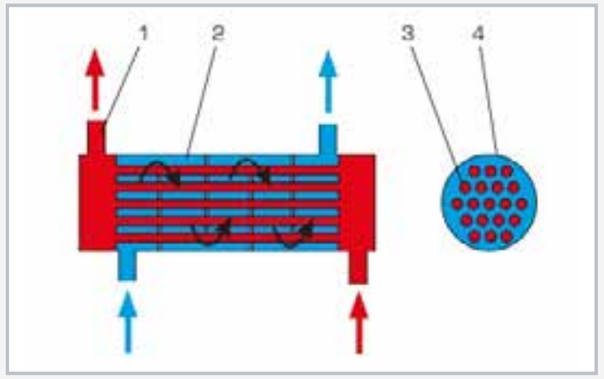

1 hot water, 2 cold water, 3 tube, 4 shell; red: hot water, blue: cold water

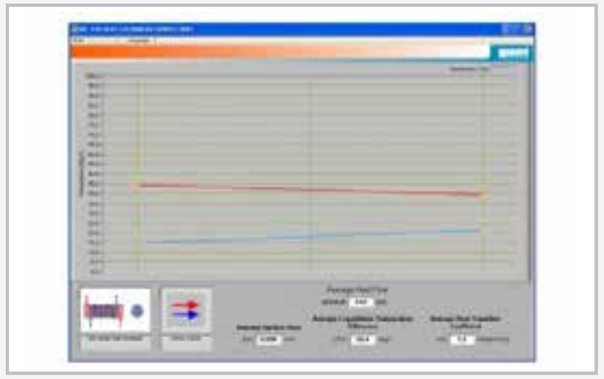

Software screenshot: temperature curve in cross parallel flow operation

Specification

[1] shell and tube heat exchanger (cross-flow) for connection to WL 110
[2] hot and cold water supply from WL 110
[3] cross parallel flow and cross counterflow operation possible
[4] transparent shell, visible tube bundle
[5] tube bundle consisting of 7 tubes and 4 baffle plates
[6] recording of temperature using WL 110

Technical data

Heat transfer surface: 200cm^2
Tube bundle, stainless steel
- outer diameter: 6mm
- wall thickness: 1mm
- tubes, 7

Shell, transparent (PMMA)
- outer diameter: 50mm
- wall thickness: 3mm

LxWxH: 400x230x110mm
Weight: approx. 3kg

Scope of delivery

1 shell and tube heat exchanger

WL 110.04
Stirred tank with double jacket and coil

Description

- **stirred tank with double jacket for connection to WL 110 supply unit**
- **stirrer for improved mixing of medium**
- **heating using jacket or coiled tube**

In many engineering processes, several basic operations are combined. For example, in a tank a chemical reaction takes place during which heat is to be supplied or removed. Such tanks are equipped with jacket or a coiled tube. Depending on the process, the medium in the jacket or in the coiled tubing is used for heating or cooling of the tank content. For a better mixing of the tank content and an even temperature distribution stirring maschines are used. The product temperature at an even temperature distribution is precisely adjustable. Considered here, the stirred tank with double jacket and coil is a model for such tanks.

The WL 110.04 is part of a series of units enabling experiments to be performed on different heat exchanger types. The experimental unit is ideally suited for investigating the functioning and behaviour of a stirred tank with double jacket and coil in operation.

The WL 110.04 is connected to the supply unit WL 110 using quick-release couplings. The jacketed stirred tank is fitted with a coiled tube. In heating mode with jacket the hot water flows through the jacket and transfers a part of the thermal energy to the cold water in the tank. In heating mode with coiled tube the hot water flows through the coil and heats the cold water in the tank. A stirring machine can be used in all modes. Valves on the supply unit are used to adjust the flow rate of hot water.

The temperature sensors for measuring the inlet and outlet temperature are located at the supply connections on the WL 110. An additional temperature sensor measures the temperature in the stirred tank.

During experiments, time curves are plotted and displayed graphically. Aditionally, the measured values can be recorded and processed using data acquisition software.

Learning objectives/experiments

- in conjunction with WL 110 supply unit
  - function and behaviour during operation of a stirred tank with double jacket and coil
  - plotting time curves:
    heating mode with jacket
    heating mode with coiled tube
  - influence of a stirring machine
  - comparison with other heat exchanger types

WL 110.04
Stirred tank with double jacket and coil

1 stirring machine, 2 stirred tank, 3 stirring machine connection, 4 temperature sensor connection, 5 jacket water connection, 6 water outlet and inlet in stirred tank, 7 coiled tube water connection, 8 temperature sensor

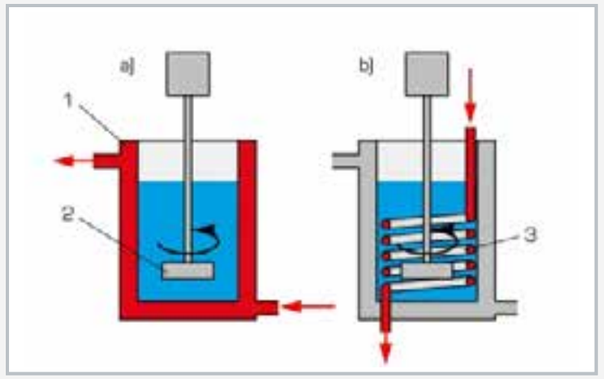

a) heating using jacket: 1 jacket, 2 stirrer
b) heating using coiled tube: 3 coiled tube;
red: hot water, blue: cold water

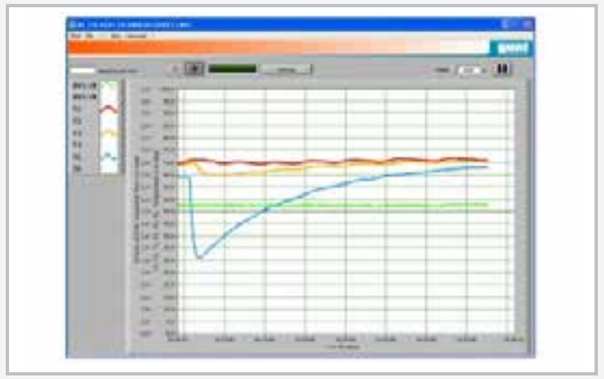

Software screenshot: Time curve for heating using jacket

Specification

[1] stirred tank for connection to WL 110
[2] hot and cold water supply from WL 110
[3] heating using jacket or coiled tube
[4] stirring machine can be used in all modes
[5] speed of stirring machine adjustable using WL 110
[6] visible working area due to transparent cover
[7] recording of temperature using WL 110 and additional temperature sensor for measuring temperature in tank

Technical data

Stirred tank
- nominal capacity: approx. 1200mL

Stirring machine
- speed: 0...330min^{-1}

Heat transfer surface
- jacket (stainless steel): approx. 500cm^2
- coil (stainless steel): approx. 500cm^2

Measuring ranges
- temperature: 0...100°C

LxWxH: 400x230x400mm
Weight: approx. 8kg

Scope of delivery

1 stirred tank

WL 320 Wet cooling tower

With interchangeable cooling columns the wet cooling tower WL 320 is used for basic experiments as well as comparative measurements in different types of cooling columns. Thus the key properties of the wet cooling tower can be traced in the experiment.

WL 320 Wet cooling tower

Additional cooling columns for comparative measurements

WL 320.01
Cooling column type 2
small surface

WL 320.02
Cooling column type 3
large surface

WL 320.03
Cooling column type 4
empty for wet deck surfaces of your own design

WL 320.04
Cooling column type 5
variable wet deck surfaces

Interchangeable cooling columns

Five different cooling columns are available

- three cooling columns with different wet deck surfaces
- one cooling column without wet deck surfaces for investigating the heat transfer in the free water drop or for own wet deck surfaces
- one cooling column with divided wet deck surfaces so that the surface of the wet deck surfaces can be varied and the distribution of the temperature and humidity within the cooling column is measured

How does a cooling tower work?

Cooling towers are used to dissipate heat arising during thermal processes, e.g. in steam power plants, air conditioning systems and process chillers. A difference is made between dry and wet cooling towers. Wet cooling towers can be constructed more easily and smaller for the same capacity. However, they feature high water losses in the range of 1...2,5% of the cooling water volume.

WL 320 is a wet cooling tower. The water to be cooled comes into direct contact with the air. The hot water is sprayed at the top of the cooling tower, trickles down the wet deck surface and is cooled in the process. The cooled water is removed at the bottom. The air enters the cooling tower from the bottom, flows upwards in a counterflow along the water trickling down, and exits at the top end.

A difference is made between cooling towers with atmospheric and forced ventilation. Very large cooling towers utilise the principle of atmospheric ventilation. Here the difference in density between the air inside and outside the cooling tower ensures the movement of the air. In small cooling towers the difference in density is insufficient for adequate air movement; they are forcefully ventilated by a fan.

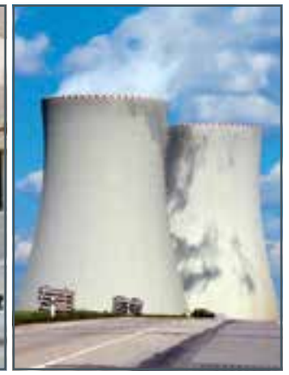

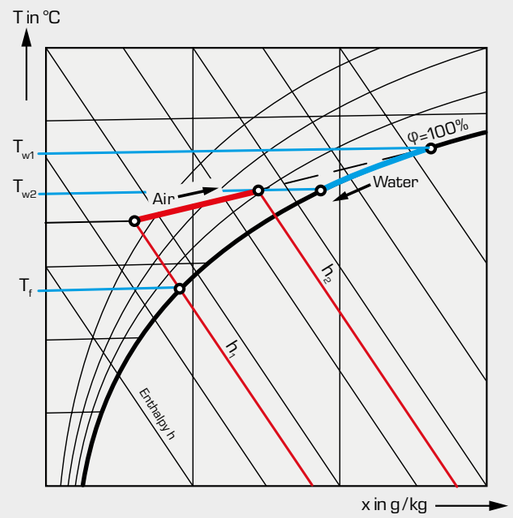

Representation of the changes of state of air and water in the cooling tower in the h-x diagram

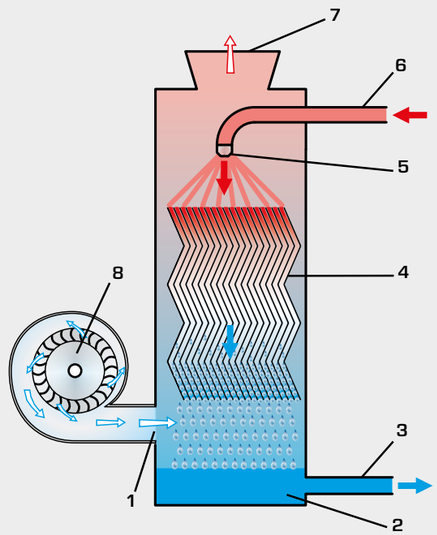

Principle of a wet cooling tower with forced ventilation

1 air inlet, **2** drip pan, **3** cold water outlet, **4** wet deck surface, **5** water distribution nozzle, **6** hot water inlet, **7** air outlet, **8** fan

There are two types of heat transfer in a wet cooling tower. First the heat is transferred by convection directly from the water to the air. In addition the water cools by partial evaporation. Decisive for the good operation of a wet cooling tower is that the air does not contain too much humidity. Therefore the water temperature T_{w2} must be clearly above the saturation temperature (wet bulb temperature) T_f of the air.

WL 320
Wet cooling tower

Description

- **principle and characteristic variables of a wet cooling tower with forced ventilation**
- **transparent, easily interchangeable cooling column with wet deck surface**
- **4 additional cooling columns available as accessory**

Wet cooling towers are a proven method of closed-circuit cooling and heat dissipation. Typical areas of application are: air conditioning, heavy industry and power plants.

In wet cooling towers the water to be cooled is sprayed over a wet deck surface. Water and air come into direct contact in the counterflow. The water is cooled by convection. Some of the water evaporates and the evaporation heat removed further cools down the water.

WL 320 examines the main components and principle of a wet cooling tower with forced ventilation. Water is heated in a tank and transported by a pump to an atomiser. The atomiser sprays the water to be cooled over the wet deck surface. The water trickles from the top to the bottom along the wet deck surface whilst air flows from the bottom to the top. The heat is transferred directly from the water to the air by convection and evaporation.

The evaporated water volume is recorded. The air flow is generated by a fan and adjusted using a throttle valve.

The cooling column is transparent allowing clear observation of the wet deck surface and the trickling water. Interchangeable cooling columns (WL 320.01 – WL 320.04) enable comparative studies.GUNT software for data acquisition via USB under Windows 7, 8.1, 10

All important process parameters are recorded (volumetric air flow rate, temperatures of air and water, air humidity, water flow rate). The measured values can be read on digital displays. At the same time, the measured values can also be transmitted directly to a PC via USB. The data acquisition software is included. The changes of state of the air are represented in an h-x diagram.

Learning objectives/experiments

- thermodynamic principles of the wet cooling tower
- changes of state of the air in the h-x diagram
- determination of the cooling capacity
- energy balances
- calculation of process parameters, such as maximum cooling distance, cooling zone width etc.
- in conjunction with the cooling columns WL 320.01-WL 320.04
  - comparison of different wet deck surfaces

WL 320
Wet cooling tower

1 nozzle as atomiser, 2 wet deck surface, 3 displays and controls, 4 air chamber, 5 fan with throttle valve, 6 pump, 7 tank with heating, 8 tank for additional water, 9 combined temperature/humidity sensor

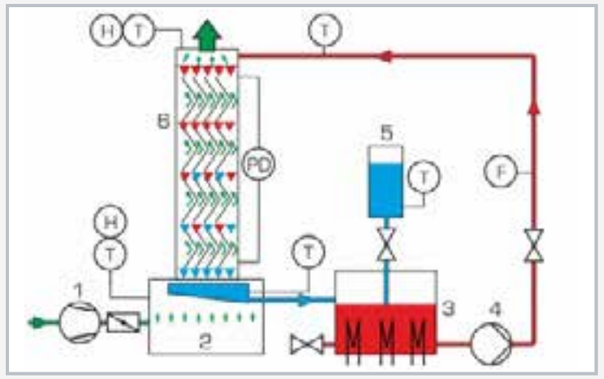

1 fan, 2 air chamber, 3 tank with heater, 4 pump, 5 tank for additional water, 6 cooling column with wet deck surface; T temperature, H humidity, dp differential pressure, F water flow rate

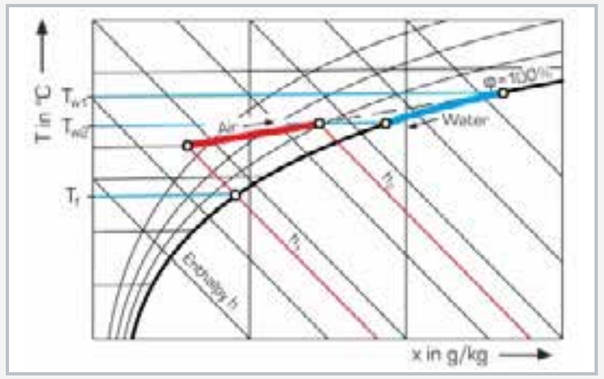

Changes of state of air and water in the h-x diagram as online representation in the software

Specification

[1] principle of a wet cooling tower with cooling column and forced ventilation
[2] interchangeable cooling columns with different wet deck surfaces available as accessories
[3] water circuit with pump, filter, valve and a nozzle as atomiser
[4] three-stage heater with thermostat for water heating
[5] radial fan for forced ventilation
[6] throttle valve to adjust the air flow
[7] demister unit at the outlet of the cooling columns minimises water loss
[8] tank for additional water compensates for water loss
[9] display of temperature, differential pressure, flow rate and humidity
[10] GUNT software for data acquisition via USB under Windows 7, 8.1, 10

Technical data

Cooling column
- specific surface of the wet deck surface: 110m²/m³
- cross-section: 150x150mm

Volumetric air flow measurement via orifice: Ø 80mm
Heater, adjustable in three stages:
- 500W
- 1000W
- 1500W

Thermostat: switches off at 50°C
Fan
- power consumption: 250W
- max. pressure difference: 430Pa
- max. volumetric flow rate: 13m³/min

Pump
- max. head: 70m
- max. flow rate: 100L/h

Tank for additional water: 4,2L

Measuring ranges
- differential pressure: 0...1000Pa (air)
- flow rate: 12...360L/h (water)
- temperature: 2x 0...50°C, 3x 0...100°C
- rel. humidity: 10...100%

230V, 50Hz, 1 phase
230V, 60Hz, 1 phase; 230V, 60Hz, 3 phases
UL/CSA optional
LxWxH: 1100x470x1230mm
Weight: approx. 120kg

Required for operation

PC with Windows recommended

Scope of delivery

1 trainer
1 cooling column type 1
1 GUNT software CD + USB cable
1 set of instructional material

WL 210
Evaporation process

Learning objectives/experiments

- observation of typical forms of evaporation
  - single phase liquid flow
  - sub-cooled boiling
  - slug flow
  - annular flow
  - film boiling
  - dispersed flow
  - single phase vapour flow
  - wet steam
- effect on the evaporation process by
  - flow rate
  - temperature
  - pressure

Description

- **demonstration of evaporation in a double-wall pipe evaporator made of glass**
- **operation with harmless, special low boiling point liquid**

During the generation of vapour, the medium that is to evaporate runs through different flow forms dependent on the heat transfer area. The medium flows into a tube evaporator as a fluid and exits the tube evaporator as superheated vapour.

In practice, the water vapour generated in big systems is used e.g. for heating plants or machine drives. To design steam generators, it is important to have knowledge of the evaporation process with the boiling crises in order to ensure reliable operation. Boiling crises are caused by a sudden deterioration of the heat transfer, whereby the high heat flux density leads to a dangerous increase in the wall temperature.

The WL 210 experimental unit can be used to examine and visualise the evaporation process in its various flow forms. This is done by heating evaporating liquid, Solkatherm SES36, in a tube evaporator made of glass.

Compared with water, this liquid has the advantage that its boiling point is at 36,7°C (1013hPa), whereby the entire evaporation process takes place at much lower temperatures and a lower heating power. The pressure can be varied via the cooling circuit. A water jet pump evacurates the evaporation circuit.

WL 210
Evaporation process

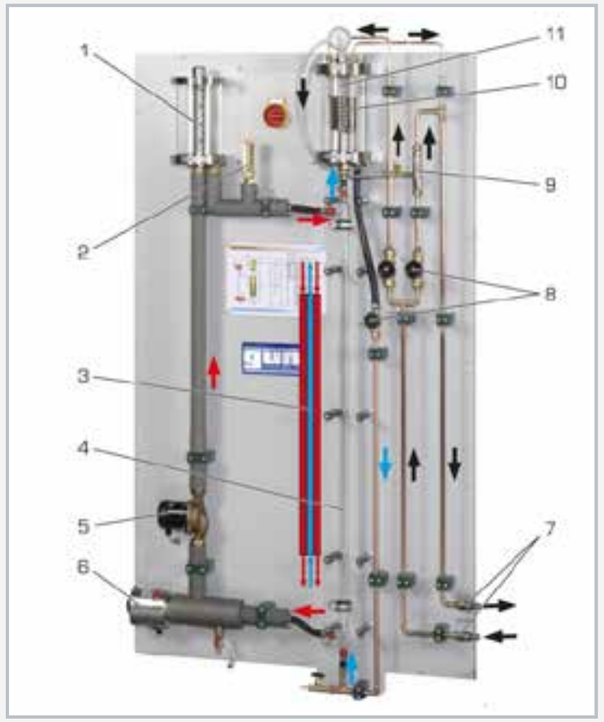

1 heating circuit tank, 2 thermometer, 3 tube evaporator, schematic drawing, 4 tube evaporator, 5 pump, 6 heater, 7 cooling water connection, 8 valves, 9 water jet pump, 10 tube coil, 11 collector with manometer and safety valve; red: heating circuit, blue: evaporation circuit, black: cooling circuit

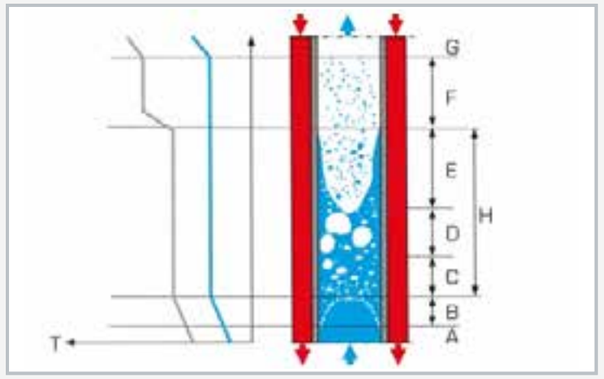

Evaporation in a tube evaporator:
A subcooled fluid, B initial boiling point, C bubbly flow, D slug flow, E annular flow, F dispersed flow, G superheated vapour, H boiling range; blue: fluid temperature, grey: heating surface temperature

Specification

[1] visualisation of evaporation in a tube evaporator
[2] heating and cooling medium: water
[3] tube evaporator made of double-wall glass
[4] heating circuit with heater, pump and expansion vessel
[5] safety valve protects against overpressure in the system
[6] water jet pump to evacurate the evaporation circuit generate negative pressure (vacuum)
[7] evaporation circuit with CFC-free evaporating liquid Solkatherm SES36

Technical data

Heater
- power rating: 2kW
- temperature range: 5...80°C

Heating and cooling medium: water

Pump
- 3 stages
- max. flow rate: 1,9m^3/h
- max. head: 1,5m
- power consumption: 58W

Tube evaporator
- length: 1050mm
- inner diameter: 16mm
- outer diameter: 24mm

Condenser: coiled tube made of copper

Measuring ranges
- pressure: -1...1,5bar relativ
- temperature: 0...100°C

230V, 50Hz, 1 phase
230V, 60Hz, 1 phase
120V, 60Hz, 1 phase
UL/CSA optional
LxWxH: 1250x790x1970mm
Weight: approx. 170kg

Required for operation

water connection: 500mbar, min. 320L/h, drain

Scope of delivery

1 trainer
1 refrigerant (Solkatherm SES36, 1kg)
1 set of hoses
1 set of instructional material

WL 220
Boiling process

Description

■ **visualisation of boiling and evaporation**

Heating a liquid over a heating surface produces different modes of boiling dependent on the heat flux density. They can accelerate the evaporation process (nucleate boiling) or impair it (film boiling). In practice, a limitation of the heat flux density must be assured in order to prevent damage to the heating surface. This knowledge is applied in practice e.g. when designing steam boilers for steam-powered drives.

The WL 220 experimental unit can be used to demonstrate boiling and evaporation processes in a straightforward manner. The processes take place in a transparent tank. A condenser in the form of a water-cooled tube coil ensures a closed circuit within the tank. Solkatherm SES36 is used as evaporating liquid. Compared with water, this liquid has the advantage that its boiling point is at 36,7°C (1013hPa), whereby the evaporation process takes place at much lower temperatures and a lower heating power.

Sensors record the flow rate of the cooling water, the heating power, pressure and temperatures at all relevant points. The measured values can be read on digital displays. At the same time, the measured values can also be transmitted directly to a PC via USB. The data acquisition software is included.

Learning objectives/experiments

■ visualisation of different forms of evaporation
- ▸ free convection boiling
- ▸ nucleate boiling
- ▸ film boiling

■ heat transfer
■ effect of temperature and pressure on the evaporation process

WL 220
Boiling process

1 safety valve, 2 displays for temperature, flow rate and pressure, 3 condenser, 4 pressure vessel, 5 drain valve for the evaporating liquid, 6 heater, 7 cooling water connection, 8 valve for adjusting the cooling water, 9 cooling water flow rate sensor

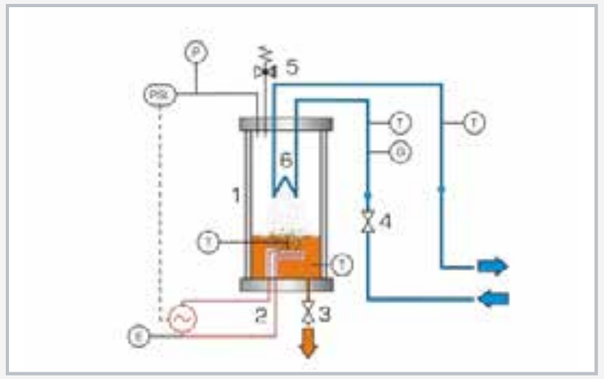

1 pressure vessel, 2 heater, 3 drain valve, 4 cooling water valve, 5 safety valve, 6 condenser; orange: evaporating liquid, red: heater, blue: cooling circuit; PSL pressure switch, E output, T temperature, Q flow rate, P pressure

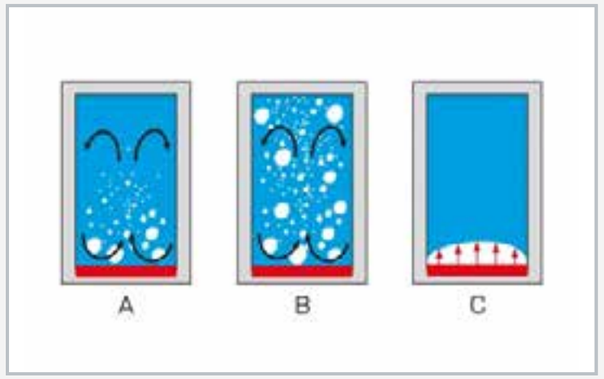

Different modes of boiling: A free convection boiling, B nucleate boiling, C film boiling; red: heater, blue: evaporating liquid, white: steam, black: convection flow

Specification

[1] visualisation of boiling and evaporation in a transparent pressure vessel
[2] evaporation with heating element
[3] condensation with tube coil
[4] safety valve protects against overpressure in the system
[5] pressure switch for additional protection of the pressure vessel, adjustable
[6] sensors for pressure, flow rate and temperature with digital display
[7] GUNT software for data acquisition via USB under Windows 7, 8.1, 10
[8] CFC-free evaporating liquid Solkatherm SES36

Technical data

Heater
■ power: 250W, continuously adjustable

Safety valve: 2bar rel.
Pressure vessel: 2850mL
Condenser: coiled tube made of copper

Measuring ranges
■ pressure: 0...4bar abs. (tank)
■ power: 0...300W (heater)
■ flow rate: 0,05...1,8L/min (cooling water)
■ temperature: 4x 0...100°C

230V, 50Hz, 1 phase
230V, 60Hz, 1 phase
120V, 60Hz, 1 phase
UL/CSA optional
LxWxH: 1000x550x800mm
Weight: approx. 65kg

Required for operation

water connection, drain
PC with Windows recommended

Scope of delivery

1 experimental unit
1 refrigerant (Solkatherm SES36, 2kg)
1 GUNT software CD + USB cable
1 set of hoses
1 set of instructional material

WL 230
Condensation process

Description

- **visualisation of different condensation processes**

Condensation forms when steam meets a medium with a lower temperature than the saturation temperature for the existing partial pressure of the steam. Factors such as the material and surface roughness of the medium influence the heat transfer and thus the type of condensation. In practice, it is usually film condensation. Dropwise condensation only forms when the cooling surface is very smooth and poorly wettable, e.g. Teflon. Knowledge of condensation processes is applied e.g. in steam power plants or at distillation processes.

The WL 230 experimental unit can be used to demonstrate the different condensation processes using two tubular shaped water-cooled condensers made of different materials. Dropwise condensation can be demonstrated by means of the condenser with a polished gold-plated surface. Film condensation forms on the matt copper surface of the second condenser, thus making it possible to examine film condensation.

The tank can be evacuated via a water jet pump. The boiling point and the pressure in the system are varied by cooling and heating power. Sensors record the temperature, pressure and flow rate at all relevant points. The measured values can be read on digital displays. At the same time, the measured values can also be transmitted directly to a PC via USB. The data acquisition software is included. The heat transfer coefficient is calculated from the measured values. The influence of non-condensing gases, pressure and the temperature difference between the surface and steam can be examined in further experiments.

Learning objectives/experiments

- dropwise and film condensation
- determination of the heat transfer coefficient
- effect of pressure, temperature and non-condensable gases on the heat transfer coefficient

WL 230
Condensation process

1 condensers, 2 heat exchanger, 3 steam trap, 4 displays for temperature, flow rate and pressure, 5 heater, 6 cooling water connections, 7 water jet pump, 8 temperature sensor, 9 valve for adjusting the cooling water, 10 cooling water flow rate sensor

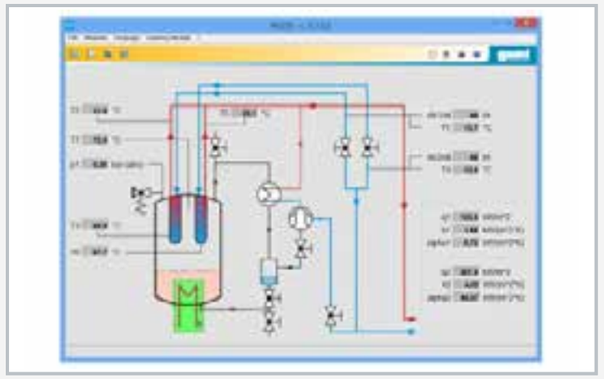

Software screenshot

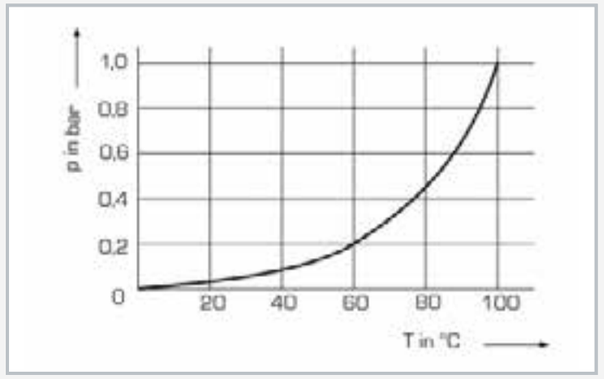

Vapour pressure curve for water: p pressure, T temperature

Specification

[1] visualisation of the condensation process of water in a transparent tank
[2] two water-cooled tubes as condensers with different surfaces to realise film condensation and dropwise condensation
[3] controlled heater to adjust the boiling temperature
[4] water jet pump to evacuate the tank
[5] pressure switch and safety valve for safe operation
[6] sensors for temperature, pressure and flow rate with digital display
[7] GUNT software for data acquisition via USB under Windows 7, 8.1, 10

Technical data

Heater
- output: 3kW, freely adjustable

Condenser
- 1x tube with matt copper surface
- 1x tube with a polished gold-plated surface

Water jet pump
- flow rate: 4...12L/min
- pressure: 16mbar

Safety valve: 2200mbar absolute

Measuring ranges
- pressure: 0...10bar abs.
- flow rate: 0,2...6L/min
- temperature: 4x 0...100°C, 3x 0...200°C

230V, 50Hz, 1 phase
230V, 60Hz, 1 phase
230V, 60Hz, 3 phases
UL/CSA optional
LxWxH: 1000x550x790mm
Weight: approx. 85kg

Required for operation

water connection: 1bar, max. 1000L/h, drain
PC with Windows recommended

Scope of delivery

1 experimental unit
5L distilled water
1 GUNT software CD + USB cable
1 set of hoses
1 set of instructional material

Machine dynamics

Fluid energy machines generally have rotating or oscillating machine parts. This is why machine dynamics plays a key role when designing a fluid energy machine. Of particular importance is the oscillation behaviour of a fluid energy machine. Vibrations can affect comfort (vibration and noise), however, they can also be a risk to the machine as they may reduce its service life or, in the worst case, destroy the machine.

Most turbomachines have a rotating shaft with one or several fitted disks or rotors. From a machine dynamics point of view, this combination of shaft and disk is an oscillatory spring/mass system that can initiate bending vibrations by means of imbalance forces. Resonance can result in very large oscillation amplitudes that could, in the worst case, destroy the machine completely.

In many cases a particular speed of the machine is required. In particular, driving machines that supply a generator need to run at a specific and very constant speed. This speed is guaranteed by installing speed controllers. Mechanical speed controllers use flyweights to control the speed.

A very important component is the speed limiter that limits the speed to a less dangerous value when, for instance, the machine carries a small or zero load. Without the limiter, the machine would speed up until the strength of the machine's components would be exceeded by the centrifugal force, and the machine would be destroyed.

To explain these complex relationships and the interaction of the different mechanisms, GUNT offers corresponding experimental units for these subject areas.

Reciprocating engine

The masses of pistons **1** moving back and forth in reciprocating engines create vibrations. Well-placed cranks **2**, a larger number of cylinders, and suitable balancing masses **3** can minimise these vibrations.

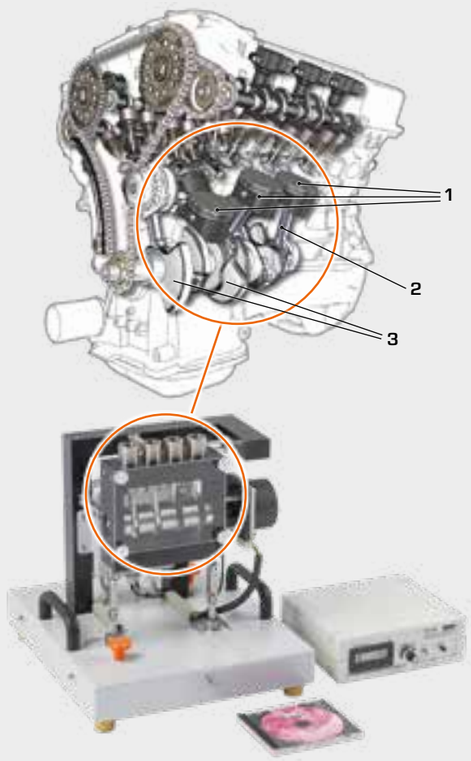

TM 180
Forces in reciprocating engines

TM 180 clearly shows the effect of the cylinder configuration on the oscillation behaviour of a reciprocating piston engine. The experimental unit can be used to simulate 1, 2, and 4-cylinder models with different piston masses and crank angles. The free mass forces are measured and compared with the theoretical predictions.

Steam turbine

The steam turbine is a typical fluid energy machine. It has a rotor that rotates at a very high speed. The rotor consists of a shaft **1**, commonly of an elastic and relatively thin design, and the blades **2**. This design can introduce critical operating conditions with bending vibrations. To prevent this, steam turbines are equipped with a speed control system. It consists of a speed sensor **3**, a controller **4** and an actuator **5**.

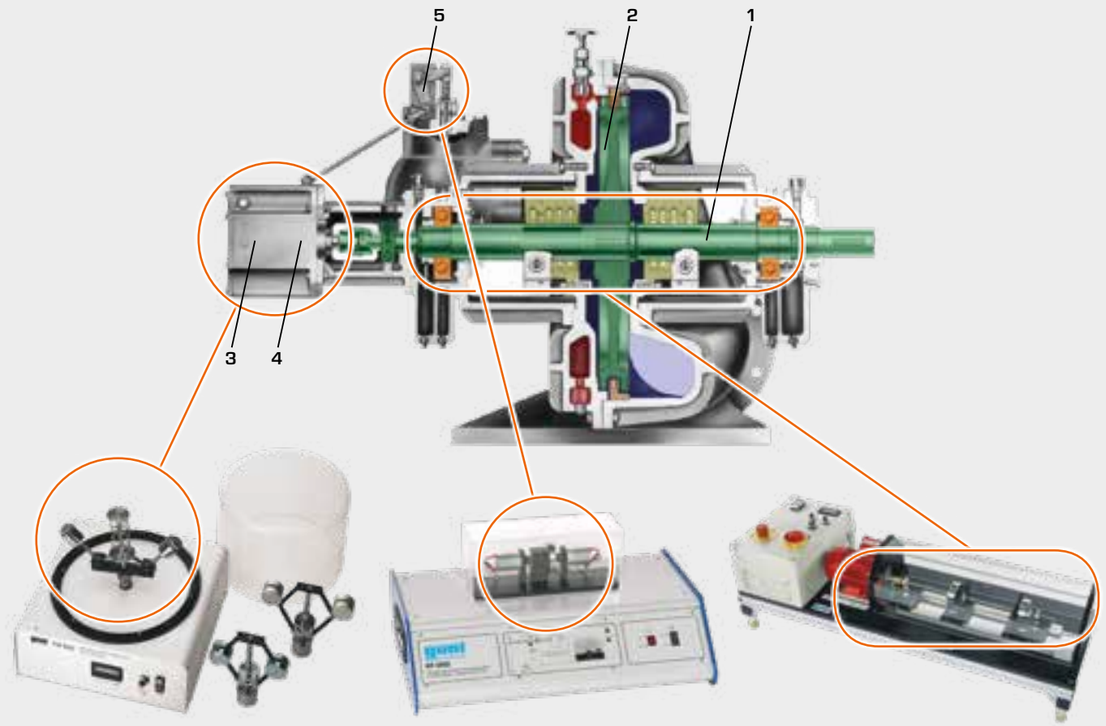

TM 632
Centrifugal governor

Experimental unit TM 632 introduces the mode of operation of a purely mechanical centrifugal governor. The centrifugal force causes a deflection that is proportional to the speed, and which acts on an actuator used to set the speed. In gas turbines and internal combustion engines the centrifugal governor controls the fuel supply. The TM 632 can be used to show the functions of different types of centrifugal governors.

RT 050
Training system: speed control, HSI

The compact experimental unit RT 050 offers an introduction to control engineering. Using this experimental unit, students can become familiar with the interaction of the different elements of a control loop, and practice setting a target speed and adjusting the load steps.

TM 620
Bending elasticity in rotors

In experimental unit TM 620 the rotor of the turbine is an elastic shaft with fitted disk-shaped masses. A variety of educational experiments can be performed to reinforce and deepen the understanding of imbalance vibrations and of vibrations in subcritical or supercritical states of an oscillating system. The phenomenon of resonance can be demonstrated safely as well.

RT 050
Training system: speed control, HSI

Description

- **experimental unit with speed control system**
- **extensive range of experiments on fundamentals of control engineering**
- **state-of-the-art software for all experimental units of the RT 010 – RT 060 series, with extensive controller and recorder functions**
- **software-based simulation of the controlled system**

This compact experimental unit offers every opportunity to learn the fundamentals of control engineering through experimentation on a speed control system.

The experimental setup is mounted on a housing which accommodates all the electronics. A transparent protective cover permits safe observation of the experiments. A DC motor drives a shaft with a mass flywheel. The dial gauge allows the speed to be read off directly at any time. The speed is measured inductively using a speed sensor. The output signal from the sensor is sent to the software controller. The output signal from the controller influences the motor current. A generator acting as a mechanical resistance to shaft rotation can be activated by the software to study the influence of disturbance variables.

The powerful state-of-the-art software is an integral part of the training system, embodying the principle of hardware/software integration (HSI). It enables the experiments to be conducted and evaluated in a user-friendly manner. The software has network capability. The link between the experimental unit and the PC is made via a USB port.

Learning objectives/experiments

- fundamentals of control engineering based on the example of a speed control system with PT_1 behaviour
- open loop control response
- effects of different controller parameters and methods on the response of the closed loop system
- recording of step responses
  - reference variable
  - disturbance variable
- controller optimisation
- software-based controlled system simulation
  - comparison of different controlled system parameters

RT 050
Training system: speed control, HSI

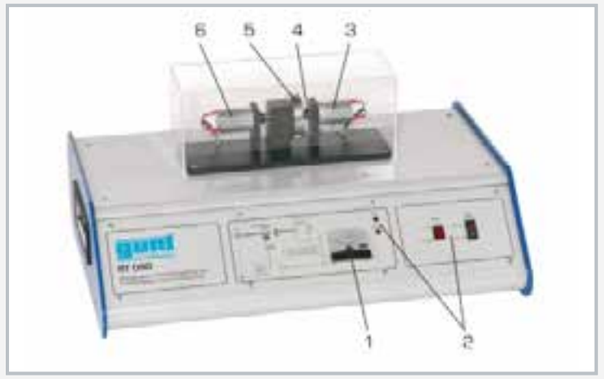

1 tachometer, 2 displays and controls, 3 generator, 4 speed sensor, 5 rotor, 6 motor

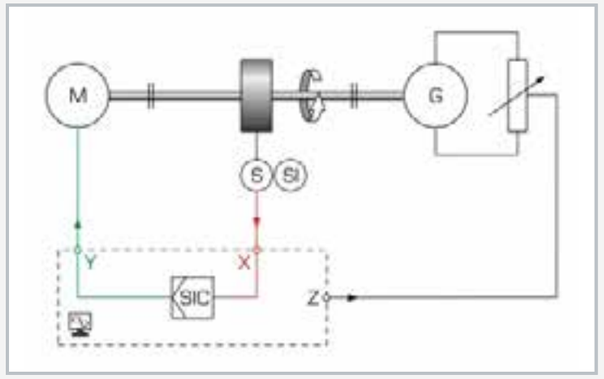

Process schematic

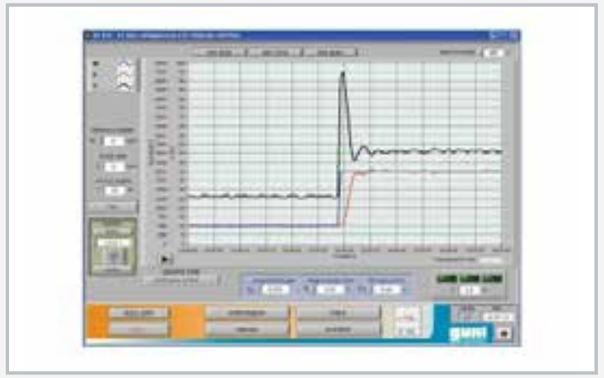

Software screenshot: step response to change in reference variable with PID controller (acceptable control quality)

Specification

[1] experimental unit for control engineering experiments
[2] speed control of a DC motor with shaft and flywheel
[3] transparent protective cover for motor/generator set
[4] inductive speed sensor
[5] generation of disturbance variables by adjustable generator load
[6] software-based controlled system simulation
[7] process schematic on front panel
[8] networkable GUNT software
[9] GUNT software with control functions and data acquisition via USB under Windows 7, 8.1, 10

Technical data

Motor
- max. speed: 4500min $^{-1}$
- max. motor power output: 10W
- max. torque: 1,7Ncm

Generator
- max. speed: 4500min $^{-1}$
- max. power output: 10W
- max. torque: 1,7Ncm

Tachometer (analogue): 0...6000min $^{-1}$
Software controller configurable as P, PI and PID controller
Software
- process schematic with controller type selection (manual, continuous controller, programmer)
- time functions
- simulation function
- disturbance variable input

230V, 50Hz, 1 phase
230V, 60Hz, 1 phase
120V, 60Hz, 1 phase
UL/CSA optional
LxWxH: 600x450x310mm
Weight: approx. 18kg

Required for operation

PC with Windows

Scope of delivery

1 experimental unit
1 GUNT software CD + USB cable
1 handbook: fundamentals of control engineering (RT 010 – RT 060)
1 manual for RT 050

TM 632
Centrifugal governor

Description

- **visualisation of the effect of centrifugal force**
- **how various centrifugal systems work**
- **determination of characteristic curves and setting curves of different centrifugal governors**

Centrifugal governors use the properties of centrifugal force to control the speed of a machine. Due to centrifugal force, a rotating flyweight mass has the tendency to move away from the axis of rotation and is prevented by counteracting mechanisms. These mechanisms are differentiated into those governors that use weights and those that use springs. Corresponding kinematics cause a deflection proportional to the speed to occur on the governor. Via an actuator, this affects the energy supplied to the machine, thereby controlling the machine's speed.

The TM 632 experimental unit presents centrifugal systems that demonstrate the different principles of operation of both weight and spring-based governors.

The housing holds the drive with an electronically controlled motor. The speed is continuously adjustable and displayed digitally. The governors are inserted into a chuck on the drive. Centrifugal masses, sleeve forces and spring preload can be varied using the accessories supplied, depending on the governor. The stroke can be read on markings on the governor shaft. A transparent protective cover above the rotating centrifugal governor ensures safety: operation is only possible when the protective cover is properly attached.

Learning objectives/experiments

- kinetics and kinematics of the following centrifugal systems
  - Porter governor
  - Proell governor
  - Hartnell governor
- adjustment of centrifugal governors
- recording the governor characteristic curves and setting curves
- calculation of the structural design and adjustment of different governors

TM 632
Centrifugal governor

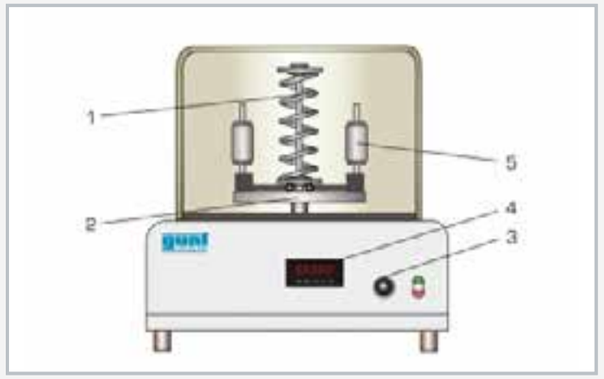

1 spring, 2 Hartnell governor centrifugal system, 3 control element for adjusting speed, 4 speed display, 5 centrifugal mass

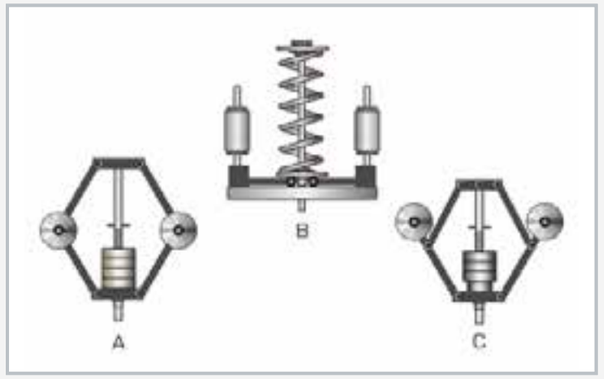

Different centrifugal systems: A Porter governor, B Hartnell governor, C Proell governor

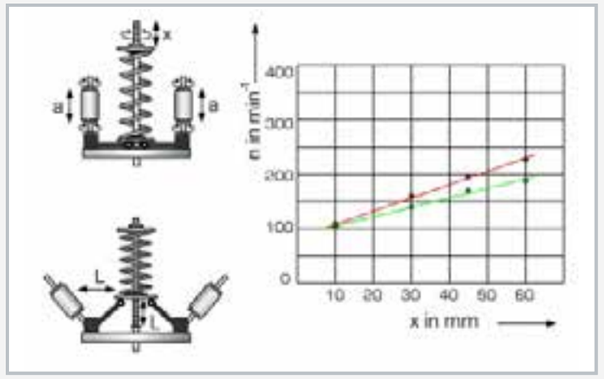

Settings and characteristic of the Hartnell governor at constant centrifugal force lever arm: a centrifugal mass adjustment, l centrifugal force lever arm, n speed, x spring preload; green increasing speed, red decreasing speed

Specification

[1] how centrifugal systems work
[2] three different centrifugal governors: Porter, Proell and Hartnell governors
[3] versatile range of variations on the governors: adjustment of the centrifugal mass, the sleeve force and the spring preload
[4] continuous adjustment of speed via a potentiometer
[5] drive with DC motor
[6] digital speed display
[7] protective cover with electronic coupling to the drive ensures safe operation

Technical data

DC motor
- max. power: 35W

Speed control: 60...400min^{-1}

Proell governor
- sleeve mass: 3x 100g
- centrifugal mass: 2x 150g

Porter governor
- sleeve mass: 3x 100g
- centrifugal mass: 2x 400g

Hartnell governor
- centrifugal mass: 2x 400g
- 2 compression springs, adjustable spring preload

Measuring ranges
- speed: 0...600min^{-1}

230V, 50Hz, 1 phase
230V, 60Hz, 1 phase; 120V, 60Hz, 1 phase
UL/CSA optional
LxWxH: 420x420x430mm
Weight: approx. 30kg

Scope of delivery

1 experimental unit
3 centrifugal governors
1 set of tools
1 set of weights
1 set of instructional material

TM 620
Bending elasticity in rotors

Description

- **investigation of bending vibrations in rotors**
- **determine critical speeds**
- **positions of rotor bearing and rotating mass can be adjusted**

Critical speed and resonance are phenomena that play essential roles in many machines and systems. In particular, resonance states with impermissibly high vibration amplitudes can occur in rotating shafts and rotors at certain speeds, which in some cases can even lead to destruction of the machine. To prevent this, the system is operated well above or below the critical speed and driven quickly through the critical speed range. Therefore, knowledge of critical speeds and vibration modes is important in the design and operation of machines with bending elasticity in their rotors.

The TM 620 experimental unit can be used to clearly demonstrate phenomena such as resonance, self-centring and vibration modes. The model-like structure of the experimental rotor as a thin, elastic shaft with rigid mass disks allows simple theoretical comprehension of the vibration phenomena that occur.

The influence of different parameters can be studied thanks to the free choice of bearing and disk arrangement. The limitation of the amplitudes at a rapid resonant cycle can also be demonstrated.

A three-phase motor drives a rotor shaft, onto which one or two masses may be fixed at various distances. The rotor shaft is mounted in two self-aligning ball bearings and connected to the motor via a flexible coupling. The electronically controlled speed can be selected via two potentiometers and is continuously variable. It is displayed on a digital display.

The positions of and distances to elements fixed onto the rotor shaft can be read on a scale mounted in parallel with the rotor.

A transparent protective cover and safety bearings immediately next to the masses ensure safe operation.

The measured values can be displayed and analysed on a PC using the optional TM 620.20 unit for data acquisition.

Learning objectives/experiments

- investigate bending vibrations and resonance of a rotating shaft
- determine critical speeds with different arrangements of the bearing and masses on the rotor shaft and compare with theory
- investigation of the rotor's self-centring effect

TM 620
Bending elasticity in rotors

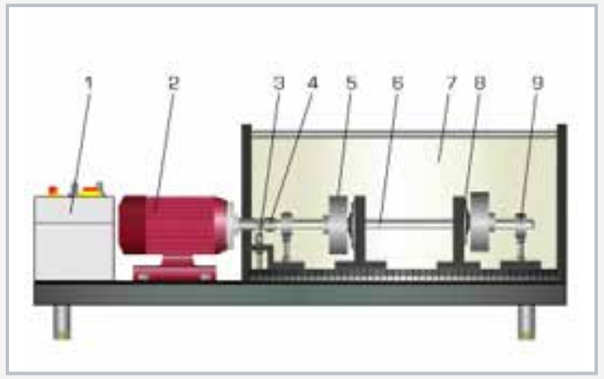

1 switch box, 2 motor, 3 inductive speed sensor, 4 flexible coupling, 5 mass disk, 6 rotor shaft, 7 protective cover, 8 safety bearing, 9 self-aligning ball bearing

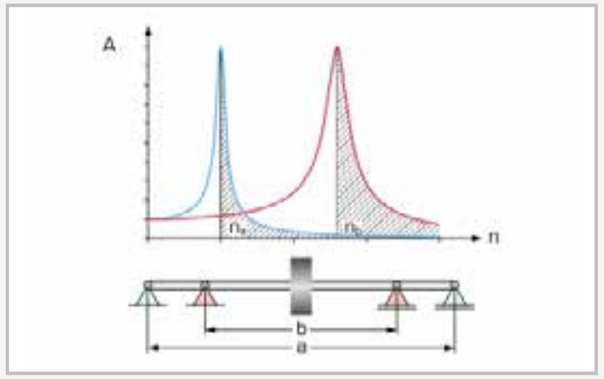

Reducing the bearing clearance increases the critical speed; A amplitude, n speed; n_a critical speed at bearing clearance a, n_b critical speed at bearing clearance b, shaded area: supercritical speed

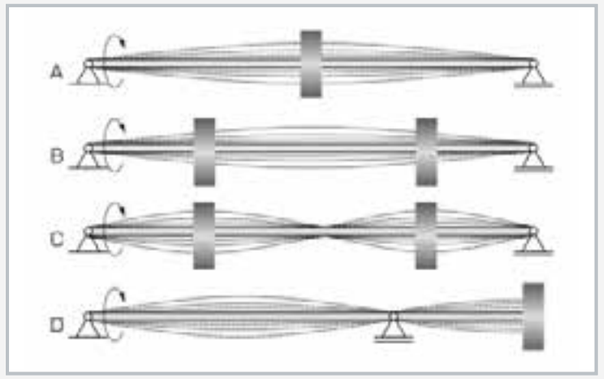

Various arrangements for studying the critical speed:
A one mass disk central position, B two mass disks at first critical speed, C two mass disks at second critical speed, D overhung mass disk

Specification

[1] investigation of bending vibrations and resonance in rotors
[2] 2 self-aligning ball bearings to support the rotor shaft, positionable at any point
[3] 2 masses to be secured at any point
[4] safety bearing and transparent protective cover for safe operation
[5] three-phase motor: 2 pre-selectable speed ranges; speed electronically controlled and continuously adjustable
[6] digital speed display
[7] system for data acquisition (TM 620.20) available as an option

Technical data

Three-phase motor
- power: 0,25kW
- max. speed: 3000min^{-1}

Rotor shaft
- L=500mm
- Ø 6mm
- high tensile steel

Mass 2x, disk-shaped
- m=965g
- Ø 80mm
- hardened steel

Rotor bearing
- 2x self-aligning ball bearings
- 2x safety bearings
- safety bearing play: ±3mm
- adjustable bearing clearance: 300...470mm

Measuring ranges
- speed: 300...3000min^{-1}
- scale for measuring distance: 0...500mm

230V, 50Hz, 1 phase
230V, 60Hz, 1 phase; 120V, 60Hz, 1 phase
UL/CSA optional
LxWxH: 1150x390x375mm
Weight: approx. 49kg

Scope of delivery

1 experimental unit
1 set of instructional material

TM 180
Forces in reciprocating engines

Description

- **investigation of free mass forces and moments of a reciprocating engine**
- **continuous adjustment of the angle between cranks**
- **simulation of single, two- or four-cylinder engines**

Every reciprocating engine generates mass forces. The mass forces of the oscillating masses cannot be compensated completely, while the mass forces of the rotating masses are fully compensated. By using several cylinders it is possible that the forces compensate each other. However, disturbing moments may still occur.

The experimental unit TM 180 enables investigation of the free masses and moments of a reciprocating engine with a single cylinder, with two cylinders or with four cylinders.

The engine model comprises pistons with plastic slide bushes. The slide bushes do not require lubrication. For each cylinder, the angle between cranks can be adjusted continuously. As an aid, marks are provided at 0°, 90°, 180° and 270°.

The oscillating masses can be varied by using additional weights at the pistons. The four-throw crankshaft is driven by a DC motor and a synchronous belt. The speed is electronically controlled and digitally displayed. The free forces and moments are recorded by force sensors placed at the support of the model. All electronic functions are integrated in the display and control unit. The display and control unit also contains the USB interface for data acquisition.

The GUNT software enables the detailed evaluation of the signals of forces and moments.

Learning objectives/experiments

- effect of mass forces
  - mass forces in dependence on the speed
  - mass forces in dependence on the piston mass
  - first and second order mass forces
- comparison of different crank drives
  - 4-cylinder, symmetrical, 180° angle between cranks
  - 4-cylinder, non-symmetrical, 90° angle between cranks
  - 2-cylinder, 180° angle between cranks
  - single cylinder

TM 180
Forces in reciprocating engines

1 piston, 2 cylinder, 3 crankshaft, 4 foundation plate, 5 display and control unit, 6 force sensor, 7 drive motor

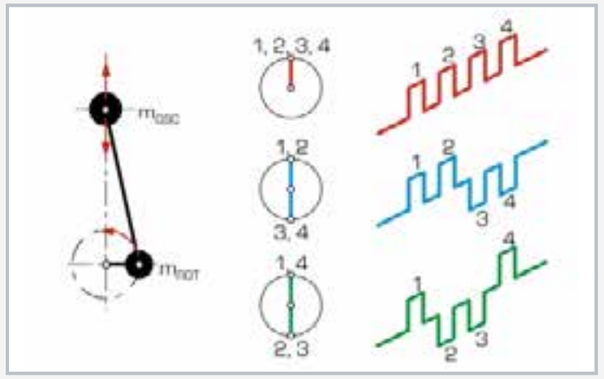

Left: definition of the rotating (m_{ROT}) and oscillating (m_{OSC}) masses at the crank drive, right: possible configurations of the crankshaft: red: single cylinder, blue: two-cylinder, green: four-cylinder

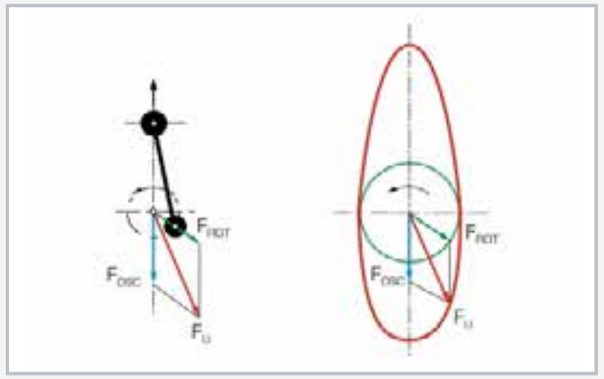

Left: effect of the oscillating (blue, F_{OSC}) and the rotating (green, F_{ROT}) mass forces and their vectorial addition to the free mass force (red, F_U).
Right: mass forces course during a crankshaft revolution

Specification

[1] experimental unit to investigate oscillating and rotating mass forces and moments of a reciprocating engine with up to 4 cylinders
[2] simulation of single, 2- or 4-cylinder engines
[3] electronically commutated and speed-controlled drive motor with digital speed display
[4] continuous adjustment of the angle between cranks
[5] force sensors to measure forces and moments
[6] vibration isolation using rubber elements and suitable tuning
[7] GUNT software for data acquisition via USB under Windows 7, 8.1, 10

Technical data

Engine
- number of cylinders: 4
- piston mass: 40g
- additional mass: 41g

Crank drive
- mass of connecting rod: 18g
- centre distance of cylinders: 35mm
- crank radius: 15mm
- length of connecting rod: 70mm

Measuring ranges
- speed: 100...3000min^{-1}
- force: 0...500N

230V, 50Hz, 1 phase
230V, 60Hz, 1 phase; 120V, 60Hz, 1 phase
UL/CSA optional
LxWxH: 420x370x350mm
Weight: approx. 40kg
LxWxH: 230x230x80mm (display and control unit)
Weight: approx. 1kg

Required for operation

PC with Windows

Scope of delivery

1 engine model
1 display and control unit
1 set of accessories (tools, additional masses)
1 GUNT software CD + USB cable
1 set of instructional material

2

Driving machines

Introduction

Overview Driving machines 092

Basic knowledge Turbines 096

Gas turbines

Basic knowledge Turbines for gaseous fluids 102

HM 270 Impulse turbine 104

HM 272 Reaction turbine 106

Overview ET 792 – ET 796 Gas turbines for experiments and demonstration 108

ET 792 Gas turbine 110

Overview ET 851 Axial steam turbine 112

Air turbines

Basic knowledge Wind turbines 114

ET 210 Fundamentals of wind power plants 116

ET 220 Energy conversion in a wind power plant 118

ET 220.01 Wind power plant 120

ET 220.10 Control unit for wind power plant ET 220.01 122

ET 222 Wind power drive train 124

Basic knowledge Wave energy converters 126

ET 270 Wave energy converter, OWC 128

Water turbines

Basic knowledge Water turbines 130

HM 150.19 Operating principle of a Pelton turbine 132

HM 150.20 Operating principle of a Francis turbine 134

HM 287 Experiments with an axial turbine 136

HM 288 Experiments with a reaction turbine 138

HM 291 Experiments with an action turbine 140

HM 289 Experiments with a Pelton turbine 142

HM 290 Base unit for turbines 144

HM 365.31 Pelton and Francis turbine 146

HM 365.32 Turbine supply unit 148

Overview HM 450C Characteristic variables of hydraulic turbomachines 150

HM 450C Characteristic variables of hydraulic turbomachines 152

HM 450.01 Pelton turbine 154

HM 450.02 Francis turbine 156

HM 430C Francis turbine trainer 158

HM 421 Kaplan turbine trainer 160

Overview HM 405 Axial-flow turbomachines 162

HM 405 Axial-flow turbomachines 164

Internal combustion engines

Basic knowledge Internal combustion engines 166

Overview GUNT-FEMLine Internal combustion engine training 168

CT 159 Modular test stand for single-cylinder engines, 2,2kW 170

CT 159.01 Electronic engine indicating system for CT 159 172

CT 159.02 Exhaust gas analysing unit 173

CT 150 Four-stroke petrol engine for CT 159 174

CT 151 Four-stroke diesel engine for CT 159 175

CT 152 Four-stroke petrol engine with variable compression for CT 159 176

CT 153 Two-stroke petrol engine for CT 159 177

Driving machines

A driving machine is a machine that removes energy from a fluid and releases it in the form of mechanical work (**W**). In the process a form of energy, such as thermal or electrical energy, is converted to mechanical energy.

In practical application driving machines are mainly used to power working equipment, tools or vehicles. Depending on the energy source, we distinguish between hydraulic or thermal engines, wind power and electrical driving machines.

Driving machines
Energy is removed from the fluid

Turbomachines
Transfer of energy between the fluid and the machine by means of flow forces

Positive displacement machines
Transfer of energy between the fluid and the machine by means of a variable volume, generated by a displacement device

- water turbines
- wind turbines

Kaplan turbine

- hydraulic engines
- internal combustion engines

V6 engine of a racing car

ET 851 Axial steam turbine

GUNT offers a variety of trainers for studying different turbines and engines of various sizes and designs.

CT 151 Four-stroke diesel engine for cT 159

The table below shows an extract from a typical curriculum of a technical university. The syllabus for the lecture on fluid machinery looks similar to this. Depending on focus, the syllabus can be modified in line with the classification of the fluid machinery. The GUNT devices cover most of these topics.

Driving machines	GUNT products
Hydraulic driving machines	
Water turbines	HM 405
Francis turbine	HM 150.20, HM 365.31, HM 430C, HM 450.02
Kaplan turbine	HM 421
Pelton turbine	HM 150.19, HM 289, HM 365.31, HM 450.01
Wind-driven machines	
Air turbines	ET 270, ET 220, ET 220.01
Wind power plant	ET 210, ET 220, ET 220.01, ET 222
Thermal engines	
Steam turbines	ET 851, ET 830, Catalogue 3: ET 833, ET 805
Action turbine	ET 851, HM 270
Reaction turbine	HM 272
Steam power plants	ET 810, ET 813, ET 830, ET 850/851, Kat. 3: ET 805, ET 833
Gas turbines	ET 792, ET 794, ET 796, Catalogue 3: ET 795
Setup incl. compressor/combustion chamber/turbine	ET 792, ET 794, ET 796, Catalogue 3: ET 795
Gas turbine power plants	ET 792, ET 794, Catalogue 3: ET 795
Turbine as expansion machine	ET 792, ET 794, Catalogue 3: ET 795
Turbine as jet engine	ET 792, ET 796
Internal combustion engines	CT 159, Catalogue 3: CT 110-series, CT 300-series, CT 400-series
Otto engine (four-stroke)	CT 150, CT 152
Diesel engine (four-stroke)	CT 151
Two-stroke principle	CT 153

HM 289
Pelton Turbine

Driving machines

The hydroelectric power plant at the Three Gorges Dam in China is the largest power plant of its type to date and has various turbines.

In practical application driving machines are often large and powerful. Without these machines our daily lives would not be the same as they assure our energy supply and mobility. Steam and gas turbines or engines convert chemical or thermal energy into mechanical or electrical energy.

We use internal combustion engines as drive engines. Water and wind turbines are used in power plants to produce energy. In hydroelectric power plants Kaplan, Francis or free-jet turbines, like Pelton turbines, are used. Wind turbines are used in wind power plants.

Our devices reproduce industrial reality: in doing so the reduced scale is the crucial factor.

The larger the scale of a device, the better the results of the experiment. The smaller the scale, the more flexible the handling of the device. GUNT supplies devices for both cases:

Make your choice! You can select a complete trainer including accessories that is designed to carry out precise measurements and a broad range of experiments. Or maybe you prefer a compact experimental unit for basic experiments.

What makes the small, compact experimental units, such as devices from the Labline or HM 150 series, stand out is their mobility: they can be both demonstrated in a lecture and used for practical experiments at the lab.

In any case, all you need is a connection to a power supply and possibly a water connection to operate the devices. Despite their compact structural shape, the devices offer most of the same functions as a real-life large-scale device, with the corresponding restrictions regarding power and implementation.

Driving machines in real-life application

Assembly of a Pelton turbine at the Walchensee power plant in Germany (Voith Siemens Hydro Power)

Installation of a Kaplan turbine

Wind power plant

Industrial turbines with a diameter of several metres

The suitable GUNT device

HM 450C Characteristic variables of hydraulic turbomachines, together with HM 450.01 Pelton turbine and HM 450.02 Francis turbine

HM 150.19
Operating principle of a Pelton turbine

HM 421
Kaplan turbine trainer

ET 220 Energy conversion in a wind power plant

ET 220.01
Wind power plant

The GUNT turbines: compact, easy to handle and just as functional as industrial turbines.

Basic knowledge

Turbines

Turbines are driving machines: energy is extracted from the flowing fluid and released to the surroundings in the form of mechanical work. The main components of a turbine are the revolving rotor and the fixed distributor. Together, they form a stage. The energy to be extracted from the fluid is often so large that it is not possible to do in one stage. If this is the case, several stages are switched in series, resulting in a multi-stage turbine. In practice, this occurs when the pressure differences are too high for a single stage.

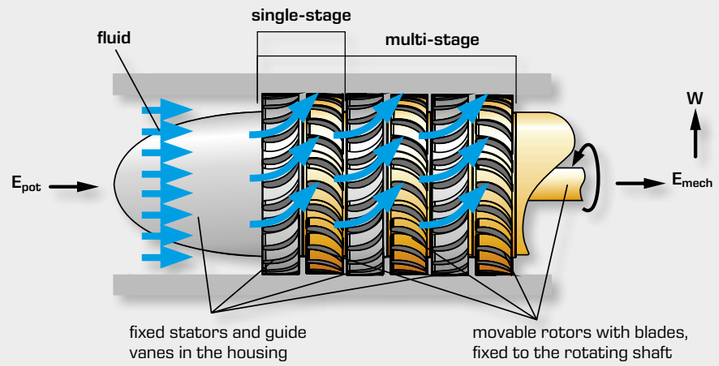

E_{pot} potential energy, E_{mech} mechanical energy, **W** work output by the turbine

Turbines can be categorised according to the following features

1. working medium

- water turbines
- steam turbines
- gas turbines
- wind turbines

2. principle of operation

- action turbines: impulse turbines, free-jet turbines, cross-flow turbines
- reaction turbines

3. direction of flow

- axial turbines
- radial turbines
- diagonal turbines

The GUNT turbines are also categorised according to these features.

The following additional categories are common in the industrial sector:

- according to external design: e. g. according to the shaft position or type of water supply: vertical shaft turbines, spiral turbines, tube turbines, etc.
- according to operating mode: operation as a turbine only, or reverse operation as a pump turbine
- according to the control principle: single-regulated via the distributor only or double-regulated via the distributor and rotor settings

Due to the multiple features, the groups overlap and turbines may be allocated to more than one group.

Categorisation according to the principle of operation

Despite the numerous differentiating factors, a general categorisation distinguishing **reaction turbines** from **action turbines** can be made. This categorisation is based on the way they convert energy.

In all turbines the pressure of the working medium, and thus its potential energy, changes in the distributor. The rotors are the point at which action and reaction turbines differ.

Action turbines

In action turbines the potential pressure energy in the distributor is completely converted into kinetic energy. The flow enters the rotor at atmospheric pressure and under partial admission conditions. Partial admission means that the force of the jet puts pressure on only some of the blades at any one time. A typical example of an action turbine is the **Pelton turbine**.

Rotor with double buckets as blades and needle nozzles

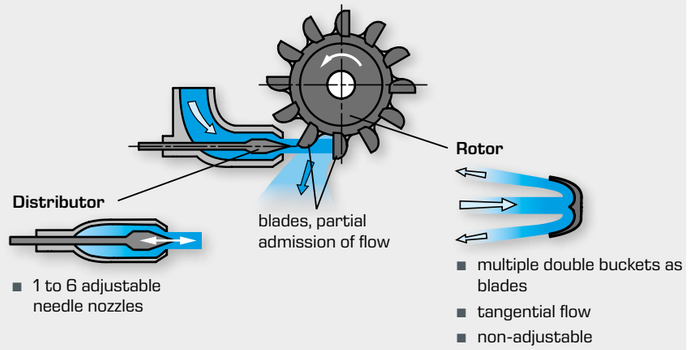

Reaction turbines

In reaction turbines, the rotor inlet pressure is higher than the outlet pressure. The conversion of the potential pressure energy is divided between the distributor and rotor. The kinetic energy is then converted into mechanical work at the rotor. The flow enters the rotor at full admission. Full admission means that the working medium flows through the entire circumference of the rotors. A typical example of a reaction turbine is the **Kaplan turbine**.

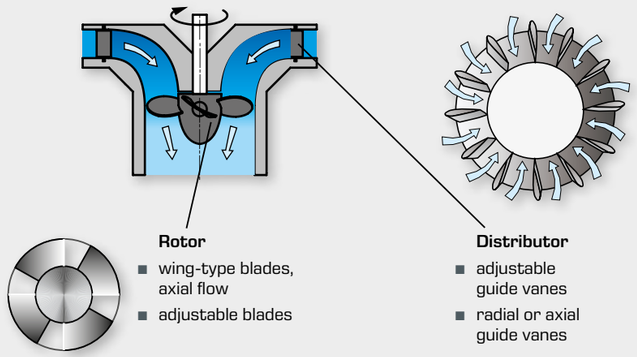

Basic knowledge

Turbines

Introduction to the theory of turbines, based on the example of a single-stage axial turbine

Axial turbines are very well suited to explain the basic principles of turbines, as they can be designed as both action turbines and reaction turbines.

Moreover, there is a clear distinction based on which working medium is used: they can be operated with water, steam, or gas. All of the information below refers to axial turbines.

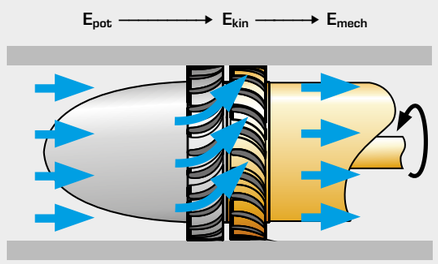

Energy

A turbine is an energy converter. The goal is to extract a usable portion of energy in the form of mechanical work from the energy of the flowing fluid. The fluid contains both potential energy (pressure) and kinetic energy (speed). In a first step, the potential energy is also converted into kinetic energy. Then, the kinetic energy of the fluid is converted into usable mechanical energy.

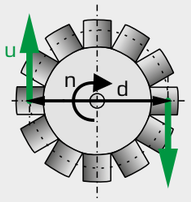

u circumferential velocity,
n speed,
d diameter

Velocities

The rotor with the diameter **d** rotates at the speed **n**, which means that the centre of the blade rotates at the circumferential velocity **u**. The direction of **u** is always perpendicular to the axis of rotation. This direction is referred to as the circumferential direction.

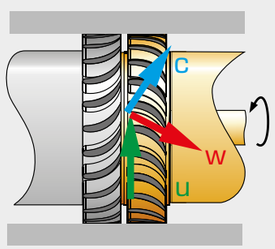

c absolute velocity,
w relative velocity,
u circumferential velocity

The **circumferential velocity u** refers to the rotor. It is the same at both the rotor inlet and the rotor outlet.

The **relative velocity w** corresponds to the velocity of the flow as compared with the turning rotor.

The **absolute velocity c** is the flow velocity relative to the stationary surroundings. It provides information on the kinetic energy of the fluid. The absolute velocity can be divided into two components: c_u in circumferential direction and c_m in axial direction.

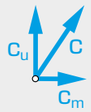

Mathematically, the three velocities have the following relationship:

$$\vec{c} = \vec{u} + \vec{w}$$

All velocities are vector values and can be divided into their components in circumferential direction as well as in radial and axial direction.

Using the energy: how is the energy in the fluid converted in the turbine?

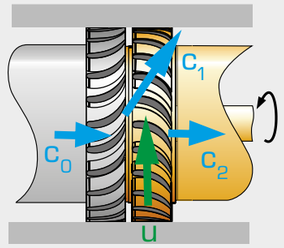

index 0 defines the inlet of the stator,
index 1 the outlet of the stator or the rotor inlet, and
index 2 the rotor outlet

The fluid enters the stator at the velocity c_0. Due to the geometry of the guide vanes, the fluid's velocity increases to c_1 as it reaches the blade. The blade deflects the working medium. This deflection generates a force on the blade and leads to the rotation of the rotor at the circumferential velocity **u**.

Due to this energy transfer to the rotor, the absolute velocity of the fluid is reduced from c_1 to c_2 when it flows through the rotor.

The force at the blade can be used to calculate the work that is transferred from the fluid to the turbine. This is called **specific work**, because the work transferred within the turbine is related to the mass of the fluid. In the technical literature, this is also described as **specific blade work**.

Euler's main equation for turbomachinery

$$Y = \Delta\,(u \cdot c_u)$$

Y specific work, **u** circumferential velocity,
c_u component of absolute velocity in the circumferential direction

The specific work is an indication of the energy grade line between the inlet and outlet and corresponds to the usable portion of energy. The specific work is calculated with the help of **Euler's main equation for turbomachinery**.

The following equation applies for turbines:

$$Y = u_1 \cdot c_{1u} - u_2 \cdot c_{2u}$$

In turbines, the velocities at the rotor inlet have an accelerating effect on the rotor, while the velocities at the rotor outlet slow down the rotor. Therefore, they are subtracted.

The energy gain or the total specific work is due to the velocity reduction from c_1 to c_2 in the circumferential direction.

The velocity reduction or the energy gain is clearly evident in the velocity triangles.

Basic knowledge

Turbines

Velocity triangles

Velocity triangles are used to illustrate flow conditions. The corresponding status of the flow is described by the flow velocities. In order to identify kinetic energy differences, flow velocities are determined according to the magnitude and / or direction. This is done with the help of velocity triangles.

When designing a turbine, velocity triangles are crucial for determining the maximum amount of usable energy. When the design parameters are changed, velocity triangles can clearly illustrate what effects this may have.

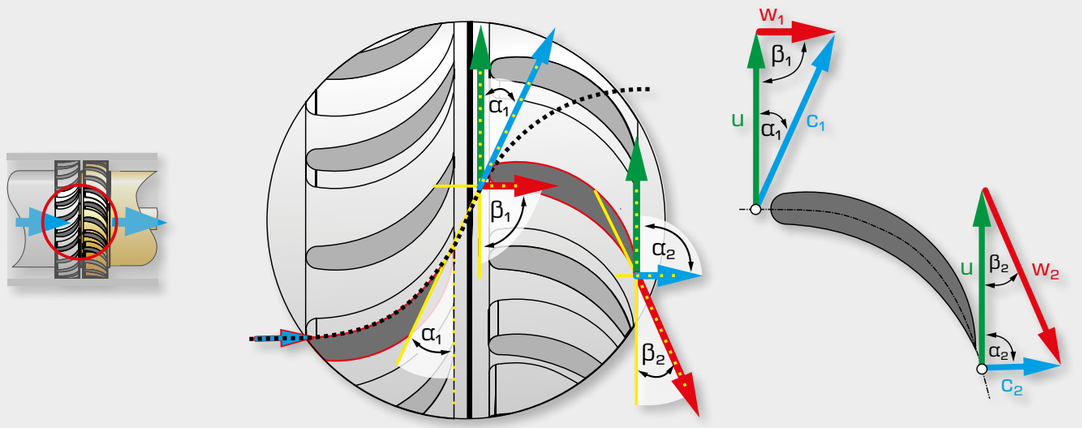

c absolute velocity, **w** relative velocity, **u** circumferential velocity,
α and **β** angles, **index 0** at the stator inlet, **index 1** between stator and rotor, **index 2** at the rotor outlet

The **absolute velocity c** is the flow velocity relative to the stationary surroundings. The direction of $\mathbf{c_1}$ corresponds to the tangent of the stator curvature (angle α1) at the outlet of the stator.

At the stator inlet the absolute velocity $\mathbf{c_0}$ and the relative velocity $\mathbf{w_0}$ are equal.

The **relative velocity w** corresponds to the velocity of the flow as compared to the turning rotor. The direction of **w** corresponds to the tangent of the blade curvature (angles β1/β2) at the observed location.

The **circumferential velocity u** refers to the rotor. It is the same at the rotor inlet and the rotor outlet.

The black dotted line corresponds to the streamline of a fluid particle passing through the turbine. On the blade, the corresponding velocity triangle for each point along the streamline can be drawn using the three velocities according to the magnitude and direction.

The graph avove shows velocity triangles at the rotor inlet and the rotor outlet. The yellow lines are reference lines used to represent the tangents of the blade curvature and to determine the angles.

All information on velocity angles applies for operation at design-point conditions with optimal incident flow at the corresponding point.

The instructional material

All experimental units from the GUNT range also include corresponding instructional material. This material is far more than simple operating instructions.

Our instructional material contains the following:

- an in-depth description of the device including detailed operating instructions
- theories and background knowledge
- selected reference experiments
- material for experiments, such as template tables and diagrams
- suggestions on how to evaluate experiments and how to interpret test results. These are partially provided in digital form using the supplied GUNT software

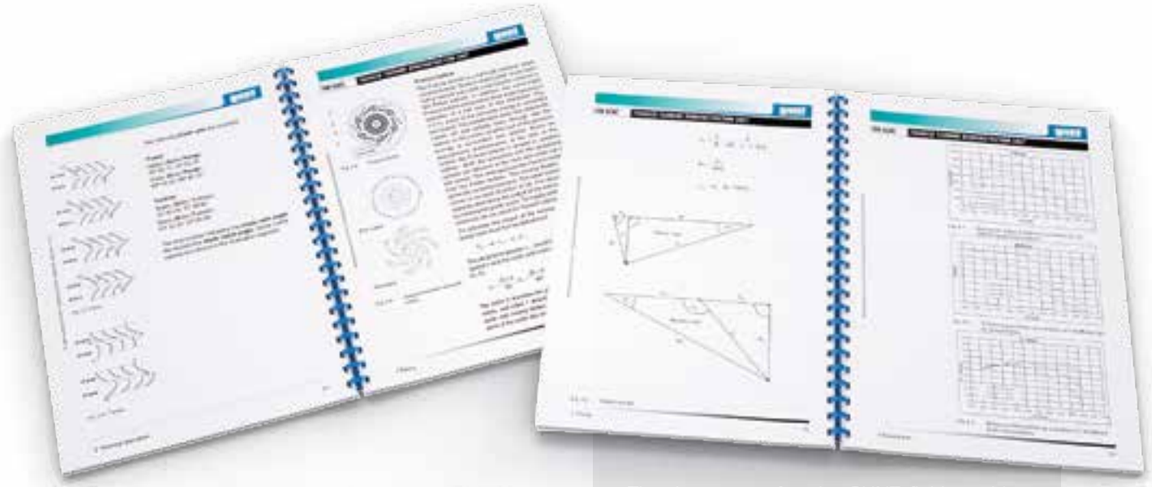

The documents for the GUNT fluid machinery provide details on the velocity diagrams. This includes detailed information on how to create velocity triangles. It also includes the differences between the velocity triangles of driving and driven machines.

Basic knowledge

Turbines for gaseous fluids

Turbines for gaseous fluids are designed as gas turbines, steam turbines or expansion turbines. They are used to power vehicles, aeroplanes and ships, or to generate electricity. The turbines in use range from small capacities (a few kWs) to large units (more than 1600 MW) in power plants. The maximum inlet pressure of steam turbines is up to 270 bar. The temperature of the fluid ranges from under 100°C in expansion turbines to over 1500°C in modern gas turbines. As turbomachines, turbines allow high mass flow rates and thus also a high concentration of power, which is why they are a preferred solution for aeroplanes, fast ships or for very high outputs.

While gas turbines only use reaction turbines, steam turbines operate with both reaction turbines and action turbines.

The advantage of action turbines in this case is that they can be designed with a partial admission rotor for use with small volume flow rates (small output, high pressure). This ensures that the diameter of the rotor and the length of the blades remain large enough, and that the speed is comparatively low.

Due to the high enthalpy gradient in gas and steam turbines, the flow velocities during the conversion to kinetic energy are high in comparision to water turbines. Accordingly, the theoretically required circumferential velocity of the rotor is very high. Since the circumferential velocity of the rotors is limited by the strength of the material, the enthalpy gradient is generally divided into several pressure or velocity stages. This is why all steam turbines, and most gas turbines, have multiple stages.

When energy conversion is accompanied by a release of energy and a corresponding pressure drop, this is called expansion. Due to the increase in volume that occurs when gaseous fluids expand, the flow cross-sections become larger from stage to stage. In the low pressure stages of large steam power plants the diameter of the last stage can be up to 3,7 m and the length of the blades more than 1,4 m ($n = 3000\,min^{-1}$).

Conversion of energy in action turbines and reaction turbines

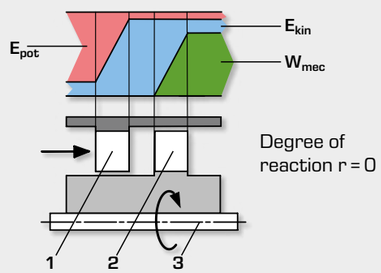

Action turbine: In the distributor, the potential pressure energy is completely converted into kinetic energy. The rotor then converts the kinetic energy into mechanical work.

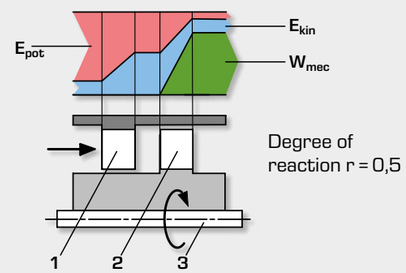

Reaction turbine: The conversion of the potential pressure energy is divided among the distributor and rotor. The kinetic energy is then converted into mechanical work at the rotor.

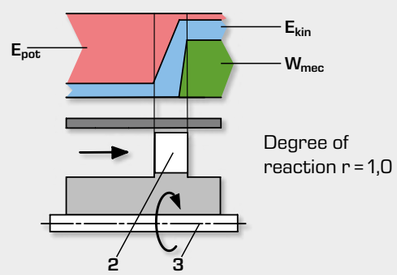

Pure reaction turbine: The conversion of the potential pressure energy into kinetic energy takes place in only one nozzle in the rotor. The recoil of the nozzle then provides the impulse for the mechanical work. Pure reaction turbines are not used in industrial applications. The figure represents an abstract form.

For the purpose of differentiation, the **degree of reaction r** was added as a dimensionless number. The degree of reaction is an indication of the proportion of energy that is converted in the rotor. Thus it is also a measure of the ratio of enthalpy **h** converted in the rotor.

$$r = \frac{h_{1\text{-}2}}{h_{1\text{-}2} + h_{0\text{-}1}} = 0...1$$

$h_{0\text{-}1}$ enthalpy gradient over the stator,
$h_{1\text{-}2}$ enthalpy gradient over the rotor

1 distributor, **2** blades, **3** rotor;
E_{pot} potential pressure energy, E_{kin} kinetic energy, W_{mec} mechanical work

Velocity triangles and multiple stages

Action turbine
with **velocity** stages:
Ratio c_{11}/u, very large

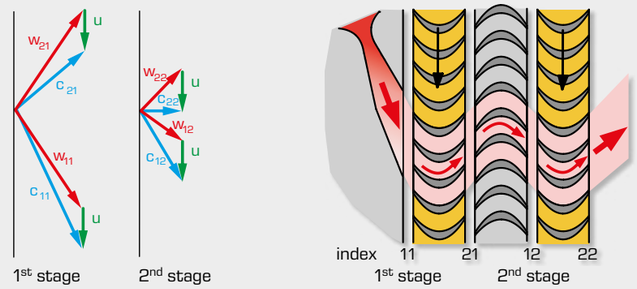

rotor stator
index 11 rotor inlet, 1st stage,
index 21 rotor outlet, 1st stage,
index 12 rotor inlet, 2nd stage,
index 22 rotor outlet, 2nd stage

Reaction turbine
with **pressure** stages:
Ratio c_{11}/u, medium

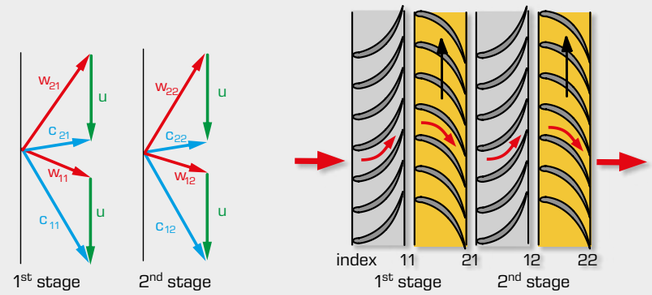

Velocity triangles and multiple stages

As with other turbomachines, we differentiate between radial and axial turbines by the direction of flow.

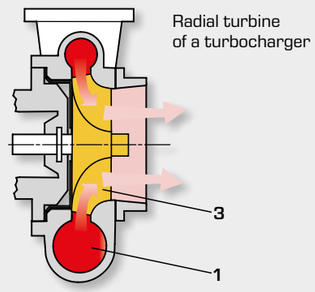

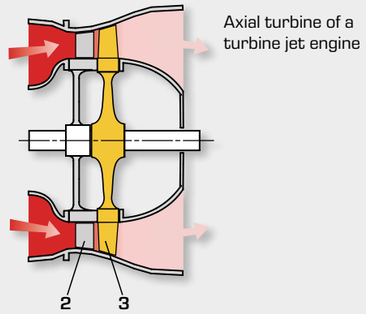

1 spiral housing as distributor,
2 distributor, **3** rotor

HM 270
Impulse turbine

Description

- **characteristic behaviour of an impulse turbine with air flow**
- **optimal view of the operating area of a turbine**
- **load applied by band brake**

In impulse turbines, the working medium has the same static pressure in front of and behind the rotor. The conversion of pressure energy into kinetic energy takes place in the fixed nozzles of the distributor, not at the turbine rotor. This compressed-air driven experimental unit can be used to understand turbines powered by steam or water.

The HM 270 is a single-stage, axial impulse turbine. The turbine consists of a rotor that is installed inside a transparent housing, a distributor with four nozzles and a band brake for applying a load to the turbine. The number of active nozzles can be adjusted by means of the valves. The compressed air velocity is increased in the nozzles. The air flow that hits the blades generates an impulse that causes the rotor to start moving.

The inlet and outlet pressure at the turbine are indicated on manometers. The turbine torque is determined by measuring the force on the band brake. The speed is measured with an optical speed sensor. Torque, speed and temperatures are digitally displayed. The air flow rate is measured with a rotameter and set by means of a valve.

The turbine is fitted with a solenoid valve as a safety device in case of overspeed. The brake drum on the turbine shaft is cooled by the compressed air.

Learning objectives/experiments

- design and function of an impulse turbine
- determination of torque, power and efficiency
- graphical representation of characteristic curves for torque, power and efficiency
- investigation of the effect of nozzle pressure and number of nozzles

HM 270
Impulse turbine

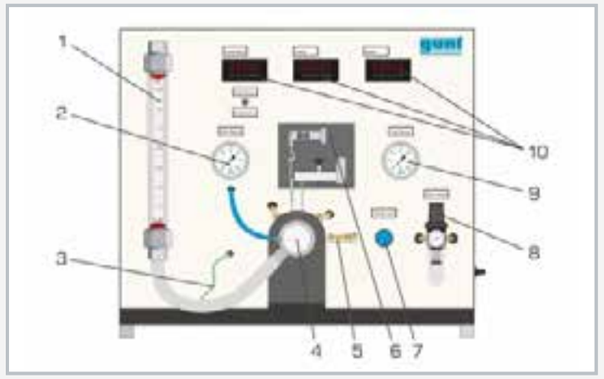

1 flow meter, 2 outlet manometer, 3 temperature sensor, 4 turbine, 5 shut-off valve for air cooler, 6 band brake with torque measurement, 7 valve for setting the flow rate, 8 pressure reducing valve with filter, 9 inlet manometer, 10 displays

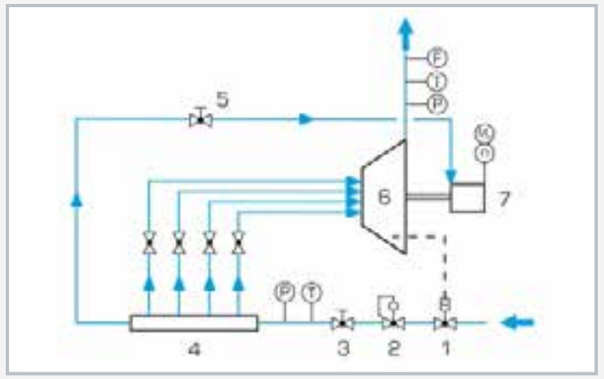

1 solenoid valve as a safety device, 2 pressure reducing valve, 3 valve for setting the flow rate, 4 compressed air distributor, 5 shut-off valve for air cooler, 6 turbine, 7 band brake; P pressure, T temperature, F flow rate, n speed, M_d torque

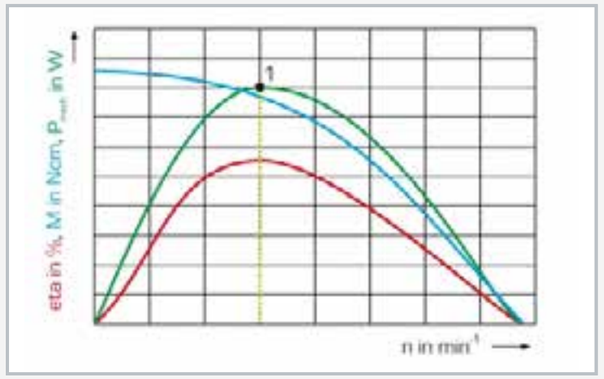

Operating behaviour and operating point of the impulse turbine
eta efficiency (red), M torque (blue), P_{mech} mechanical power (green), n speed; 1 operating point

Specification

[1] investigation of a compressed air driven axial impulse turbine
[2] transparent front panel for observing the operating area
[3] distributor with 4 nozzles
[4] selectable number of nozzles
[5] applying a load to the turbine by using the band brake
[6] setting the primary pressure with the pressure reducing valve
[7] valve and flow meter for setting the flow rate
[8] solenoid valve as a safety device to prevent overspeed
[9] determination of the torque on the turbine shaft using a force sensor
[10] measurement of the turbine speed with an optical speed sensor
[11] manometer for displaying pressures on the inlet and outlet side
[12] digital display of speed, torque and temperature

Technical data

Axial impulse turbine
- max. power: 50W at 15000min^{-1}

Rotor
- diameter: 55mm
- number of blades: 28

Stator
- 4 nozzles, number can be selected
- entry and exit angle: 20°

Measuring ranges
- temperature: -20...1100°C
- speed: 0...40000min^{-1}
- torque: 0...10Ncm
- flow rate: 25...315L/min
- inlet pressure: 0...2,5bar
- outlet pressure: 0...0,1bar
- primary pressure: 0...10bar

230V, 50Hz, 1 phase
230V, 60Hz, 1 phase; 120V, 60Hz, 1 phase
UL/CSA optional
LxWxH: 780x370x660mm
Weight: approx. 35kg

Required for operation

Compressed air supply 6...10bar, max. 300L/min

Scope of delivery

1 experimental unit
1 hose with pressure connection
1 set of instructional material

HM 272
Reaction turbine

Description

- **characteristic behaviour of a reaction turbine with air flow**
- **optimal view of the operating area of a turbine**
- **load applied by band brake**

In reaction turbines, the static pressure of the working medium in front of the rotor is higher than that behind it. In pure reaction turbines with a degree of reaction of one, the entire pressure energy in the rotor is converted to kinetic energy. This compressed-air driven experimental unit can be used to understand turbines powered by steam or water.

HM 272 is a single-stage, pure reaction turbine with a horizontal shaft. The rotor of the turbine has four outlet nozzles and is installed in a transparent housing. The air flows radially through the rotor and expands and accelerates as it exits through the outlet nozzles. The exiting air flow drives the turbine rotor according to the reaction principle. A band brake is used to apply a load to the turbine.

The inlet and outlet pressure at the turbine are indicated on manometers. The turbine torque is determined by measuring the force on the band brake. The speed is measured with an optical speed sensor. Torque, speed and temperatures are digitally displayed. The air flow rate is measured with a rotameter and set by means of a valve.

The turbine is fitted with a solenoid valve as a safety device in case of overspeed. The brake drum on the turbine shaft is cooled by means of the compressed air.

Learning objectives/experiments

- familiarisation with the design and function of an impulse turbine
- determination of torque, power and efficiency
- graphical representation of characteristic curves for torque, power and efficiency

HM 272
Reaction turbine

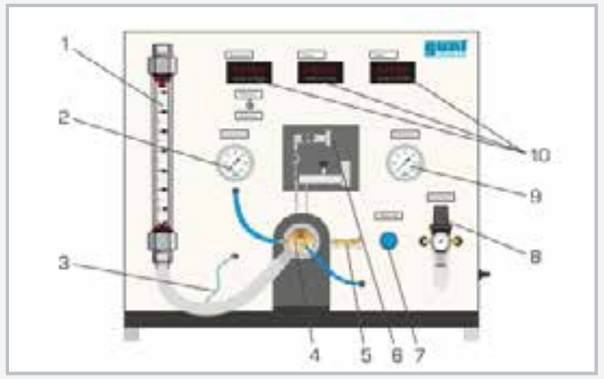

1 rotameter, 2 outlet manometer, 3 temperature sensor, 4 turbine, 5 shut-off valve for air cooler, 6 band brake with torque measurement, 7 valve for setting the flow rate, 8 pressure reducing valve with filter, 9 inlet manometer, 10 displays

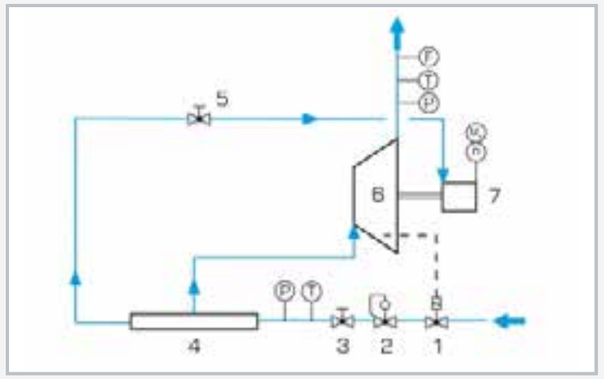

1 solenoid valve as a safety device, 2 pressure reducing valve, 3 valve for setting the flow rate, 4 compressed air distributor, 5 shut-off valve for air cooler, 6 turbine, 7 band brake; P pressure, T temperature, F flow rate, n speed, M_d torque

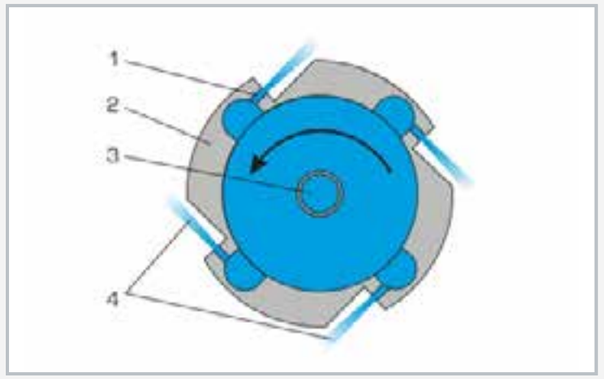

Principle of operation of the reaction turbine rotor
1 outlet nozzle, 2 turbine rotor, 3 compressed air inlet, 4 exiting air flow

Specification

[1] investigation of a compressed air driven radial reaction turbine
[2] transparent housing for observing the operating area
[3] rotor with 4 outlet nozzles
[4] application of load to the turbine by means of a band brake
[5] setting of the primary pressure with the pressure reducing valve
[6] valve and flow meter for setting the flow
[7] solenoid valve as a safety device to prevent overspeed
[8] determination of the torque on the turbine shaft using a force sensor
[9] measurement of the turbine speed with an optical speed sensor
[10] manometer for displaying the pressure on the inlet and outlet side
[11] digital display of speed, torque and temperature

Technical data

Reaction turbine
- max. power: 20W at 19000min^{-1}

Rotor
- diameter: 55mm
- 4 outlet nozzles, diameter: 1,5mm

Measuring ranges
- temperature: -20...1100°C
- speed: 0...30000min^{-1}
- torque: 0...10Ncm
- flow rate: 25...315L/min
- inlet pressure: 0...2,5bar
- outlet pressure: 0...0,1bar
- primary pressure: 0...10bar

230V, 50Hz, 1 phase
120V, 60Hz, 1 phase
LxWxH: 900x370x750mm
Weight: approx. 35kg

Required for operation

Compressed air supply 6...10bar, max. 300L/min

Scope of delivery

1 experimental unit
1 hose with pressure connection
1 set of instructional material

ET 792 – ET 796
Gas turbines for experiments and demonstration

ET 792
Gas turbine

ET 794
Gas turbine with power turbine

ET 796
Gas turbine jet engine

ET 795
Simulation of a gas turbine

GUNT offers gas turbines for the following fields of application:

- ET 796 Single-shaft turbine: Jet engines
- ET 794 Two-shaft turbine: Power generation and drive systems
- ET 792 Two-shaft turbine: Combination of power generation and drive systems / jet engines

The trainers demonstrate the typical properties of gas turbines in a way that is easily understood by students.

The students become familiar with the typical properties of a gas turbine by manual start-up and operation of our two-shaft gas turbine. Safety devices ensure safe operation. Due to the operation of the two-shaft gas turbines with propane, they are protected against overspeed. The operation with gas as fuel also avoids dangerous hot starts occurring because of unburnt fuel remaining after a start-up abort. Another advantage is the good emission quality of the unit.

Relevant values are measured by sensors, displayed and processed by a PC in many cases. This enables comprehension of the cyclic process and determination of power, fuel consumption and efficiency values etc.

The two-shaft turbines are equipped with silencers and can be operated in suitable and well ventilated laboratories. Cooling water and an exhaust gas system is required for operation.

A real jet engine in laboratory scale is used as the gas turbine for the trainer ET 796. The jet engine is a single-shaft engine with radial compressor, annular combustion chamber and axial turbine. As in reality the turbine is operated with kerosene. An electronic control unit (ECU) facilitates automated start-up and monitors turbine functions.

Please find the data sheets of ET 794 and ET 796 in chapter 4.

The GUNT simulator for gas turbines (ET 795) helps students become familiar with the typical behaviour of a gas turbine with minimal effort. The simulation also permits the safe investigation of behaviour in critical situations. Contrary to real systems, parameters such as state of inlet air or compressor pressure ratio are adjustable. Concept and operational behaviour are matched to both two-shaft turbines (ET 792, ET 794). Using the simulator is the ideal way to prepare students for experiments with the real systems.

In **Catalogue 3** "Thermal engineering" you can find further information and more gas turbines

ET 792
Gas turbine

Learning objectives/experiments

- familiarisation with the function and typical behaviour during operation of a gas turbine
- operation as jet engine
- operation as power turbine
- determining effective power
- thrust measurement
- determining specific fuel consumption
- recording the characteristic of the power turbine
- determining the system efficiency

Description

- **operation with power turbine or as jet engine with propelling nozzle**
- **simple model of a gas turbine**
- **display and control panel with illustrative process schematic**
- **propane gas as fuel**

The trainer ET 792 investigates the behaviour of a system in a two-shaft arrangement (vehicle drive, ship's propulsion or generator drive) and of a jet engine (aircraft's propulsion).

At the core of the trainer are a so-called gas generator and a free-running power turbine. The gas generator consists of a radial compressor, a combustion chamber and a radial turbine. The compressor and turbine are mounted on a shaft.

Depending on the arrangement, the energy of the exhaust gas stream is either converted into mechanical energy in the free-running power turbine (single-shaft arrangement) or accelerated and transformed into thrust via a nozzle (two-shaft arrangement). It is possible to convert from a single-shaft to a two-shaft arrangement in just a few actions.

The gas turbine works as an open cyclic process, with the ambient air being drawn out and fed back in. Intake and exhaust silencers reduce the noise in operation of the power turbine. The use of propane as the combustion gas ensures clean, odourless operation. A start-up fan is used to start the gas turbine.

Relevant measuring values are recorded by sensors and indicated on the display and control panel. At the same time, the measured values can also be transmitted directly to a PC via USB. The data acquisition software is included.

ET 792
Gas turbine

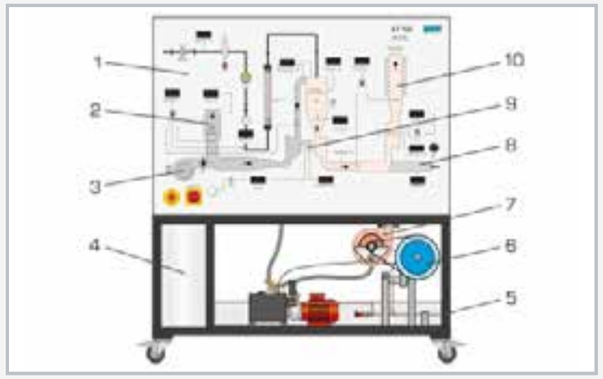

1 process schematic with displays and controls, 2 air intake with silencer, 3 start-up blower, 4 switch cabinet, 5 cooling water connection, 6 generator, 7 power turbine, 8 jet pipe with propelling nozzle, 9 gas generator (compressor, combustion chamber, turbine), 10 exhaust silencer

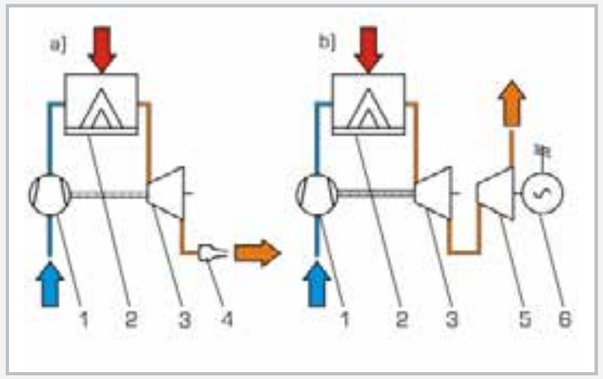

a) single-shaft system, b) two-shaft system; 1 compressor, 2 combustion chamber, 3 turbine, 4 propelling nozzle, 5 power turbine, 6 generator;
blue: cold air, red: fuel, orange: exhaust gas

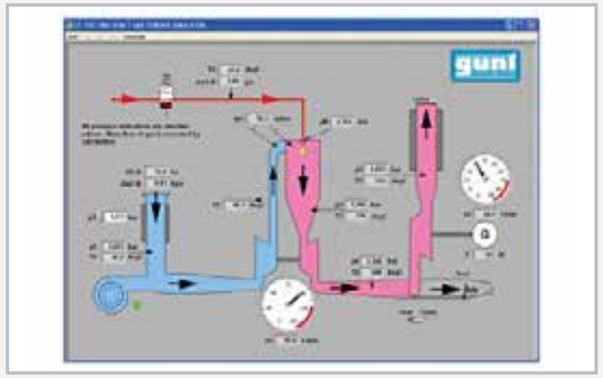

Software screenshot: process schematic of open gas turbine process in a two-shaft arrangement

Specification

[1] function and behaviour during operation of a gas turbine
[2] single-shaft arrangement for operation as jet engine
[3] two-shaft arrangement for operation with power turbine
[4] start-up fan to start the gas turbine
[5] asynchronous motor with frequency converter as generator
[6] conversion of generated electrical energy into heat using four 600W braking resistors
[7] GUNT software for data acquisition via USB under Windows 7, 8.1, 10

Technical data

Gas generator (compressor and high-pressure turbine)
- speed range: 60000...125000min^{-1}
- max. pressure ratio: 1:2,2
- max. mass flow rate (air): 0,125kg/sec
- max. fuel consumption: 120g/min

Power turbine
- speed range: 10000...40000min^{-1}
- mechanical power: 0...2kW
- electrical power: 0...1,5kW
- sound level at 1m distance: max. 80dB(A)
- temperature exhaust gas: 700°C

Operation as jet engine
- thrust measurement: 0...50N
- sound level at 1m distance: max. 110dB(A)

Measuring ranges
- temperature: 4x 0...200°C / 3x 0...1200°C
- speed: 0...199999min^{-1}
- electrical power: 0...1999W
- air flow rate: 0...100L/s
- fuel mass flow rate: 0...10,5kg/h
- fuel supply pressure: 0...25bar
- fuel nozzle pressure: 0...4bar
- combustion chamber pressure loss: 0...100mbar
- pressure, turbine inlet in gas generator: 0...2,5bar
- pressure, power turbine inlet: 0...300mbar

230V, 50Hz, 1 phase, 400V, 50Hz, 3 phases
400V, 60Hz, 3 phases, 230V, 60Hz, 3 phases
UL/CSA optional
LxWxH: 1500x680x1820mm
Weight: approx. 325kg

Required for operation

cooling water 200L/h, propane gas: 4...15bar
ventilation 500m^3/h, exhaust gas routing
PC with Windows recommended

Scope of delivery

1 trainer
1 GUNT software CD + USB cable
1 set of tools
1 set of instructional material

ET 851 Axial steam turbine

The trainer ET 851 is an axial steam turbine with eddy current brake, condenser, piping, instruments and safety devices. All relevant measured values such as temperatures, pressures and flow rate are recorded and displayed digitally. With the user-friendly software you can easily process the measured values on your PC.

ET 851 is the perfect addition to the ET 850 Steam Generator. In this combination the steam turbine can be operated and investigated in a closed steam circuit.

Experimental unit ET 851 is a single-stage, axial action turbine with a vertical axis. The steam it requires must be created externally (e.g. with the ET 850 Steam Generator). The turbine can be operated with saturated steam or superheated steam. The steam is expanded in the turbine and condensed via the water-cooled condenser. Load is applied to the turbine via an eddy current brake. The turbine has a non-contact labyrinth seal on the shaft with a sealing steam circuit. The turbine is fitted with various safety devices in order to prevent damage such as by excessively high speed or pressure in the system.

ET 851 Axial steam turbine

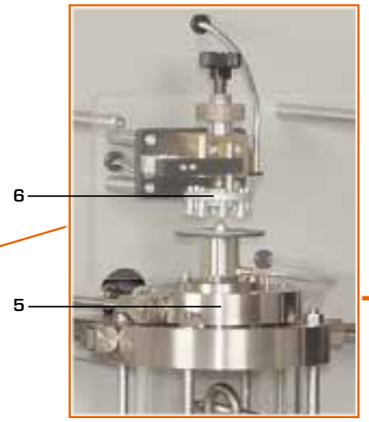

1 valve for sealing steam,
2 valve for main steam,
3 water connections,
4 condenser,
5 turbine,
6 eddy current brake

Sectional view of the et 851 steam turbine

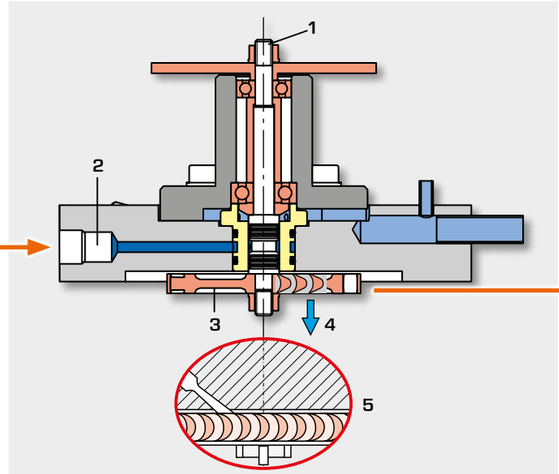

1 shaft, **2** steam inlet, **3** turbine rotor,
4 steam outlet to the condenser under the turbine,
5 sectional view of the nozzle

Sectional view of the turbine rotor

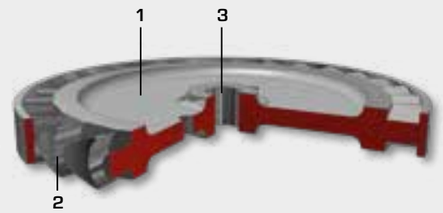

1 turbine rotor, **2** blade, **3** shaft

Software

Sensors record the temperature, pressure and flow rate at all relevant points. The turbine speed and torque are measured electronically at the eddy current brake. The measured values are read from digital displays and can be transmitted simultaneously via USB directly to a PC where they can be analysed using the software included.

Please find the data sheet ET 851 in chapter 4.

Basic knowledge

Wind turbines

Wind turbines are wind-driven turbomachines. The turbine is the part of the system where the rotor converts the kinetic energy of the wind into mechanical energy. The mechanical energy powers a generator that in turn generates electricity. Aerodynamic forces on the rotor blades ensure that the energy can be transferred from the wind to the rotor. In contrast to other systems, such as water turbines, a wind turbine is not equipped with a distributor to accelerate the air flow and ensure an optimal incident flow to the rotor.

The rotor blades of a wind turbine are very similar to the aerofoils of aircraft. The success of the wind turbine was therefore closely related to the development of low-drag aerodynamic profiles for aircrafts.

Design of a wind turbine

To design a wind turbine, the developers need to know the **power density of the wind**. The **performance of the wind turbine** and the **tip-speed ratio** are also of crucial importance.

Power density of the wind

In practice, the most interesting question is what kind of performance the wind turbine will deliver at which wind velocities. To find the right design for a wind turbine, it is therefore important to check the wind conditions on site and to calculate the **energy content** or **power density of the wind**.

The general formula used to determine the **kinetic energy** of a flowing fluid is as follows:

$$E = \frac{1}{2} \cdot m \cdot v^2$$

The density of the air can be used to define the **specific energy content e**. This is related to the air volume.

$$e = \frac{1}{2} \cdot \varrho_L \cdot v^2$$

From this, the **power density p** can be derived. Physically, power density describes the performance per unit area.

$$p = \frac{1}{2} \cdot \varrho_L \cdot v^3$$

E energy, **m** mass, **v** wind velocity, ϱ_L air density,
e specific energy content of wind, **p** power density

Performance of the wind turbine

The above formulae refer to the incoming wind power before the wind hits the wind turbine. When including the **rotor swept area A_R** the power density **p** can be used to estimate the **performance P of the wind turbine** at a given wind velocity **v**.

The kinetic energy of the air flow cannot be fully used. The air flow / wind hits the rotor area at a velocity of v_1. This results in an air blockage that slows down the flow velocity and deflects part of the incoming air flow.

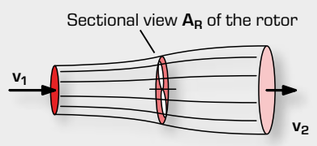

According to Betz's law this value cannot exceed a ratio of 16 / 27 or 59,3 % for fluid mechanical reasons. This is taken into account by means of the dimensionless **power coefficient c_p**. The power coefficient describes the ratio of the used and incoming wind power and corresponds to the efficiency of the wind turbine. Theoretically the value could be 0,59, in reality the power coefficient c_p depends on the turbine, and reaches 0,4 to 0,5 at best.

$$P = A_R \cdot c_p \cdot p$$

Performance of the wind turbine: **P** performance, A_R rotor area, c_p power coefficient, **p** power density

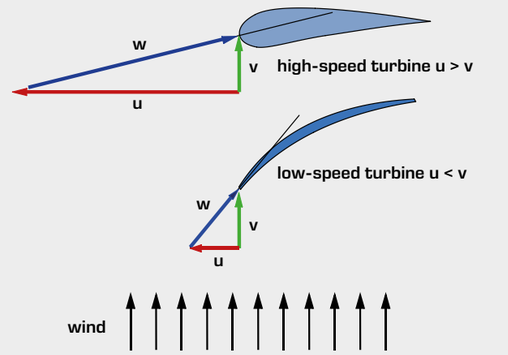

λ tip-speed ratio, **u** circumferential velocity,
v wind velocity,
w resulting effective incident flow

Tip-speed ratio

Wind turbines are characterised by the shape and number of their rotor blades. The shape and design of the rotor blades are decisive for the tip-speed ratio of the turbine. The **tip-speed ratio λ** describes the relation of the circumferential velocity **u** and the wind velocity **v** in axial direction.

$$\text{Tip-speed ratio} \quad \lambda = \frac{u}{v}$$

Tip-speed ratio

The velocities refer to the tip of the rotor blade. Here, **w** is the resulting incident flow to the rotor blade.

Modern wind turbines are designed as high-speed turbines, while the Savonius rotor or the American windmill, are low-speed turbines.

Power coefficient as a function of tip-speed ratio for different wind turbines compared to the ideal value

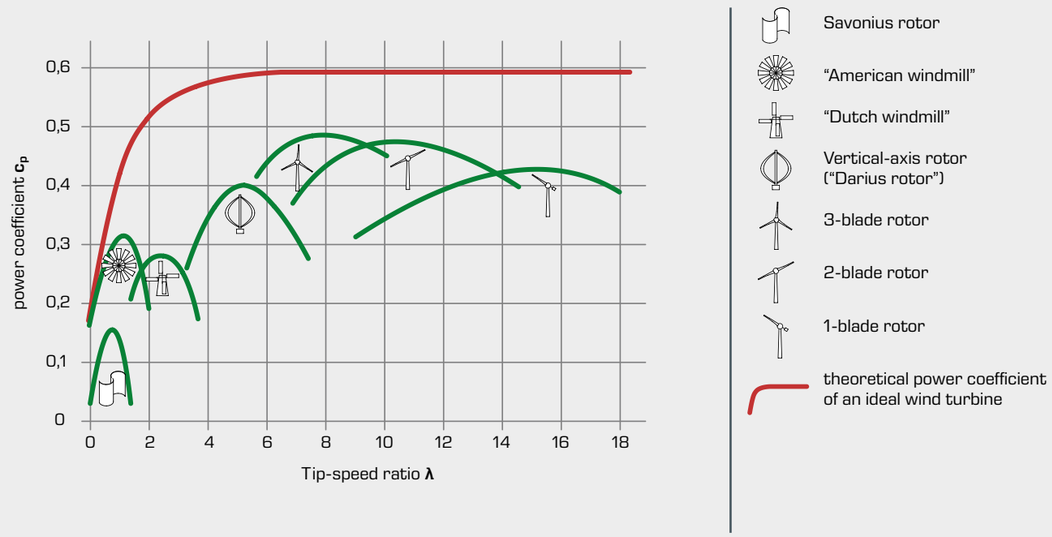

The higher the tip-speed ratio, the better the aerodynamic rotor blade profile must be. Otherwise the drag forces would have a counter-effect on any possible high power coefficients.

The 3-blade rotor turned out to be the optimal solution, also in terms of vibration. Rotors with a very high speed have a smaller efficiency.

ET 210
Fundamentals of wind power plants

Description

- **variable-speed wind power plant**
- **wind power plant with rotor blade adjustment and yaw angle adjustment**

In modern wind power plants, the power output from the wind is adapted to the changing wind conditions. In the strong wind range, power output is limited to protect the turbine. The rotor blade adjustment serves this purpose. By adjusting the angle, this changes the forces acting on the rotor blade. In the normal wind range, power consumption is optimised by means of variable speed generator systems.

ET 210 demonstrates a wind power plant with rotor blade adjustment and variable speed generator.

The wind power plant stands on a tower in a wind tunnel. The air flow is generated by an adjustable speed fan. A flow straightener ensures consistent and low-turbulence flow. A three-blade rotor drives the generator directly. The rotor blades can be easily replaced. The wind tunnel is closed during the experiments to ensure that the experiments are conducted safely.

In order to approach different operating points, the target speed of the rotor can be set via the software. The rotor blade adjustment is operated by means of a servomotor to change the rotor blade adjustment angle. The angle between the rotor axis and the wind direction (yaw angle) can be adjusted by means of a handwheel.

The rotor speed is precisely measured by Hall sensors built into the generator. The wind velocity is measured by a horizontally adjustable wind velocity sensor, so that the average wind velocity over the rotor surface can be recorded. The yaw angle is measured by an angle sensor. The measured values are transmitted directly to a PC via USB where they can be displayed and analysed using the software included. The software calculates the converted electrical power, the generator torque and system-specific parameters.

Learning objectives/experiments

- conversion of kinetic energy into electrical energy
- power adjustment by means of speed adjustment
- power adjustment by means of rotor blade adjustment
- behaviour in the case of oblique flow
- recording of characteristic diagrams
  - determination of the power coefficient as a function of the tip-speed ratio and rotor blade adjustment angle
  - determination of the power coefficient as a function of the tip-speed ratio and yaw angle
- comparison of different rotor blade shapes

ET 210
Fundamentals of wind power plants

1 inlet contour, 2 experimental section, 3 wind tunnel, 4 switch box

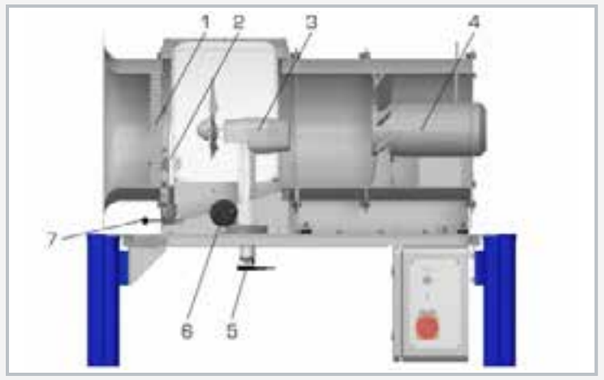

1 flow straightener, 2 wind velocity sensor, 3 wind power plant, 4 fan, 5 yaw angle sensor, 6 handwheel, 7 lever

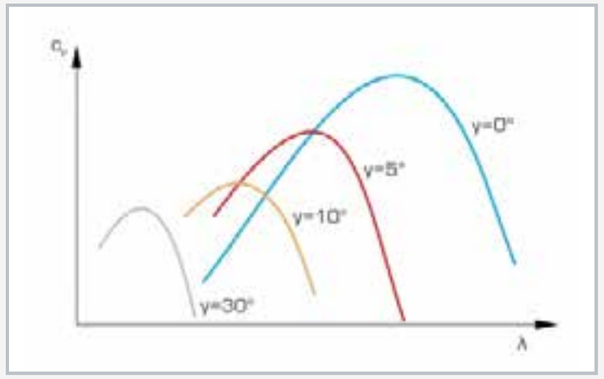

Power coefficient via tip-speed ratio at different rotor blade angles and constant wind velocity

Specification

[1] wind power plant with rotor blade adjustment
[2] wind power plant with yaw angle adjustment
[3] gearless wind power plant with 3-blade rotor
[4] variable speed generator system
[5] power regulation by means of rotor blade adjustment
[6] interchangeable rotor blades
[7] fan with adjustable speed to generate an air flow
[8] wind velocity, rotor speed and yaw angle are measured by sensors
[9] GUNT software for data acquisition via USB under Windows 7, 8.1, 10

Technical data

Wind power plant
- rotor diameter: 0,3m
- number of rotor blades: 3
- rated electrical power: approx. 6W
- rated wind velocity: 10m/s
- rated speed: 2865min^{-1}
- design tip-speed ratio: 4,5
- rotor blade adjustment: 0...30°
- weight: approx. 1,6kg
- nacelle: LxWxH: approx. 270x65x90mm

Generator
- rated voltage: 12V
- rated current: 2,02A

Wind tunnel
- diameter: 400mm

Axial fan
- max. volumetric flow rate: 6860m^3/h
- max. power consumption: 1,1kW

Measuring ranges
- wind velocity: 1...15m/s
- speed: 0...4000min^{-1}
- current: ±2,02A
- yaw angle: ±40°

230V, 50Hz, 1 phase
230V, 60Hz, 1 phase
120V, 60Hz, 1 phase
UL/CSA optional
LxWxH: approx. 1240x790x1330mm
Weight: approx. 130kg

Required for operation

PC with Windows

Scope of delivery

1 experimental unit
1 GUNT software CD + USB cable
1 set of instructional material
1 set of accessories

ET 220
Energy conversion in a wind power plant

Description

- **conversion of kinetic wind energy into electrical energy**
- **practical experiments in laboratory scale**

ET 220 is used to study how kinetic wind energy is converted into electrical energy.

The experimental plant consists of a wind tunnel and a control unit. The wind tunnel contains a wind power plant in laboratory-scale and an axial fan. A rotor and a generator are the core elements of a wind power plant. The control unit includes the control elements for the axial fan, the storage components for the electrical energy and the electrical consumers.

The axial fan generates the air flow required to set the rotor of the wind power plant in rotational motion. A flow straightener ensures the flow is consistent and low in turbulence. A generator converts the rotor's kinetic energy into electrical energy. The electrical energy is fed into a stand-alone system that is not connected to the mains grid.

A charge controller in an accumulator provides intermediate storage of the electrical energy. The electrical energy can be used by means of an electrical load. There are two bulbs that can be used as consumers. Optionally, it is also possible to connect an external consumer (such as a heater). There is no provision to feed into a public power grid.

The wind velocity is varied by changing the rotational speed of the fan. The following measurements are captured: wind velocity in front of and behind the rotor, speed of the rotor, voltage and current. The measurements are read off digital displays and can simultaneously be transmitted directly to a PC via USB and analysed there using the software included.

A circuit diagram printed on the control unit makes it easy to assign all components within the isolated network.

Alternatively, in order to conduct experiments under real wind conditions, a larger wind power plant (ET 220.01) can be connected to the control panel. This wind power plant is designed to be set up outside in the open air.

Learning objectives/experiments

- conversion of kinetic wind energy into electrical energy
- function and design of an stand-alone system with a wind power plant
- determining the power coefficient as a function of tip speed ratio
- energy balance in a wind power plant
- determining the efficiency of a wind power plant

ET 220
Energy conversion in a wind power plant

1 inverter, 2 accumulators, 3 current and voltage measuring point, 4 switch for electrical load, 5 bulbs as consumers, 6 wind power plantbrake switch, 7 charge controller, 8 load resistances, 9 displays for wind velocities and speed, 10 control elements for axial fan, 11 multimeter

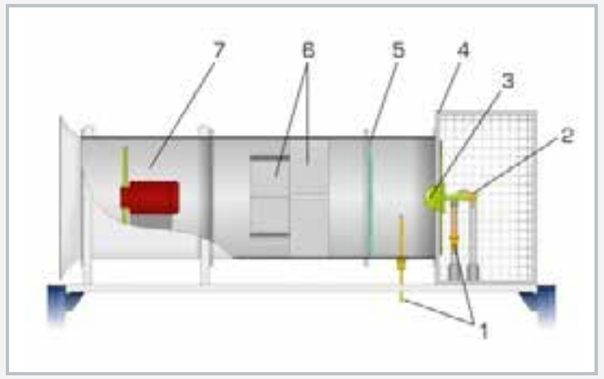

1 wind velocity sensor, 2 rotor speed sensor, 3 wind power plant, 4 protection cage, 5 flow straightener, 6 guide plates, 7 axial fan

Specification

[1] converting kinetic wind energy into electrical energy
[2] laboratory-scale wind power plant, stand-alone operation
[3] axial fan with continuously variable speed (wind velocity)
[4] flow straightener for consistent wind conditions
[5] generator for converting the kinetic energy into electrical energy
[6] accumulator for storing the electrical energy
[7] two bulbs as electrical load (consumers)
[8] measurement of wind velocity in front of and behind the rotor
[9] measurement of rotational speed of the rotor
[10] measurement of current and voltage
[11] digital displays for the measured values
[12] GUNT software for data acquisition via USB under Windows 7, 8.1, 10

Technical data

Axial fan
- max. volumetric flow rate: $5m^3/s$
- max. power: 1,5kW

Rotor
- Ø=510mm

Generator
- max. output: 60W
- voltage: 12VDC
- max. charging current: 5A

Accumulator
- voltage: 12VDC
- capacity: 8Ah

Electrical load (bulbs)
- voltage: 12VDC
- power: 55W each

Measuring ranges
- wind velocity: 0,3...50m/s
- speed: $0...3000min^{-1}$
- voltage: 0...20VDC
- current: 0...35A

400V, 50Hz, 3 phases
400V, 60Hz, 3 phases
230V, 60Hz, 3 phases
LxWxH: 2610x870x1640mm (wind tunnel)
LxWxH: 1520x790x1760mm (control unit)
Total weight: approx. 380kg

Required for operation

PC with Windows recommended

Scope of delivery

wind tunnel, 1 control unit, 1 multimeter, 1 GUNT software CD + USB cable, 1 set of instructional material

ET 220.01
Wind power plant

Learning objectives/experiments

- conversion of kinetic wind energy into electrical energy
- design and function of a wind power plant in stand-alone operation
- energy balance of a wind power plant under real wind conditions

Description

- **practical experiments under real wind conditions**
- **wind power plant with rectifier and mechanical capacity controller**
- **easier installation due to removable supports and hinged mast**
- **connection to ET 220 or ET 200.10**

The yield of a wind power plant depends on the prevailing wind velocities and the usability of the electricity generated. In order to study the operation of a wind power plant under real weather conditions, ET 220.01 was developed.
ET 200.01 can be operated with the trainer ET 220 or the control unit ET 220.10.

The ET 220.01 wind power plant consists of an engine room, also called a nacelle, mounted on a pivoting mast with a stable base and supports. The speed of the rotor and the wind velocity are measured. These measured values are displayed on the control unit and in the software of ET 220 or ET 220.10. The control unit of ET 220 or ET 220.10 measures the generator's current and voltage. It is also possible to connect the accompanying battery to the wind power plant via a charge controller.

The rotor is aligned to the wind direction by means of a vane on the nacelle. The rotor hub contains a mechanical capacity controller that uses rotor blade adjustment. The wind power plant generates a direct current at a wind velocity of about 5m/s. A rectifier is integrated in the nacelle.

Before commissioning, ET 220.01 must be connected to the control unit of ET 220 or ET 220.10. Cables are provided for this purpose, separated for the sensors and the generated electricity. It is easy to change the location of the ET 220.01 wind power plant. To do this, the device is dismantled and can easily be transported on rollers. The device is weather resistant so that it can also be operated in bad weather periods over several days.

ET 220.01
Wind power plant

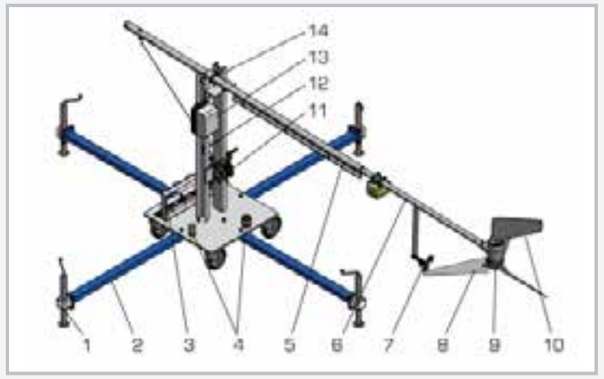

ET 220.01 with mast lying down
1 support leg, 2 mast support, 3 holder for mast supports, 4 holder for mast parts, 5 mast midsection with cable guide, 6 mast top with nacelle, 7 anemometer, 8 rotor blade, 9 engine room, 10 vane, 11 winch, 12 securing bolts, 13 junction box with transducers, 14 tilt axis

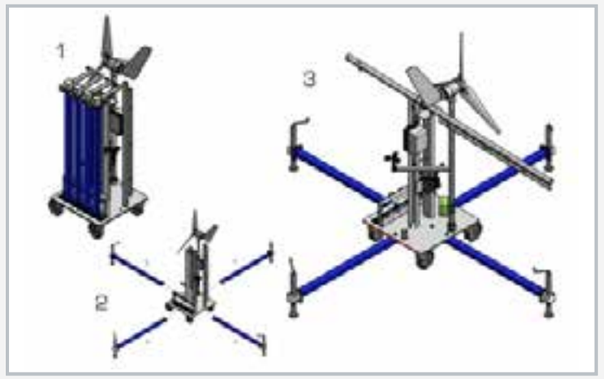

1 transport state, 2 assembling the mast supports, 3 assembling the mast

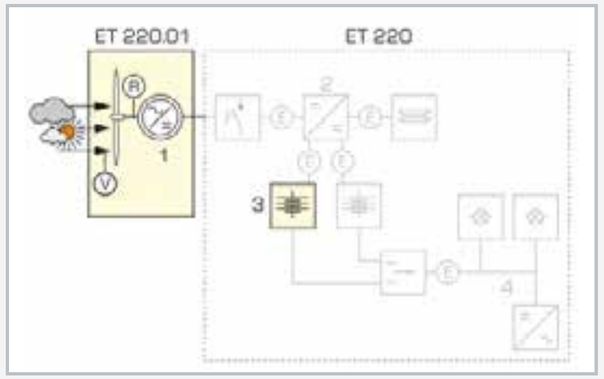

1 wind power plant with rectifier, 2 charge controller (ET 220/ET 220.10), 3 accumulator, 4 consumer (ET 220/ET 220.10); v wind velocity, R rotor speed, E current and voltage

Specification

[1] wind power plant for converting kinetic wind energy into electrical energy
[2] movable wind power plant that can be set up outside
[3] 4 base supports for stabilisation
[4] stand-alone operation with connection to ET 220 or ET 220.10
[5] generator for converting kinetic energy into electrical energy
[6] accumulator for storing the electrical energy
[7] measurement of wind velocity
[8] measurement of the rotational speed of the rotor
[9] display of the measured data on the control unit of ET 220 or ET 220.10

Technical data

Rotor
- Ø 1200mm
- hub height above ground level: approx. 5000mm

Generator
- max. output: 350W
- voltage: 12VDC
- max. charging current: 30A

Accumulator
- voltage: 12VDC
- capacity: 65Ah

Space requirement
- LxWxH: 10x6x6m
- max. distance from ET 220/ET 220.10: approx. 20m

Measuring ranges
- wind velocity: 0,7...50m/s
- speed: 0...3000min^{-1}

LxWxH: 3500x3500x5600mm (with base supports)
Weight: approx. 340kg

Scope of delivery

1 wind power plant
1 mast base
1 mast
4 base supports
1 accumulator
1 set of screws
1 set of tools
1 set of instructional material

ET 220.10
Control unit for wind power plant ET 220.01

Description

- **use of wind energy in stand-alone operation under real weather conditions**
- **compact control unit with charge controller and electrical consumers**

The generation of power in wind power plants covers a significantly increasing proportion of energy needs worldwide. Both the conversion of the kinetic wind energy and the use and storage of the generated electrical power are crucial aspects in this context.

ET 220.10 is a compact control unit for the mobile wind power plant ET 220.01. The electrical energy from the wind power plant ET 220.01 is fed into the stand-alone system of ET 220.10, which is independent from the power grid.

The electrical energy is stored temporarily by means of a charge controller in an accumulator included in ET 220.01. As soon as the accumulator is charged, the excess electrical energy is dissipated in fixed resistors. This overcharge protection is triggered when the defined end-of-charge voltage is reached.

It is indicated on the charge controller by means of an LED lamp. The wind power plant will continue to run under these conditions, and can provide electrical energy again instantaneously when needed.

Within the stand-alone system the stored electrical energy of the accumulator can be absorbed with the help of electrical loads. Two lamps act as consumers. The energy is not intended to be supplied to a public power grid.

Sensors record the wind velocity and the rotor speed of ET 220.01 as well as the current and voltage of the stand-alone system. The measured values are transmitted directly to a PC via USB, where they can be analysed using the software included. In addition, digital displays indicate the wind velocity and rotor speed. The laboratory's own multimeters can be connected via lab jacks to measure and display current and voltage.

Learning objectives/experiments

- in combination with the wind power plant ET 220.01:
  - conversion of kinetic wind energy into electrical energy
  - operating behaviour of a wind power plant under real weather conditions
  - components, function and setup of a stand-alone system with a wind power plant
  - energy balance of a stand-alone system with a wind power plant

ET 220.10
Control unit for wind power plant ET 220.01

1 fixed resistors, 2 rotor speed display, 3 wind velocity display, 4 electrical load, 5 measuring point for current and voltage, 6 wind power plant brake switch, 7 charge controller

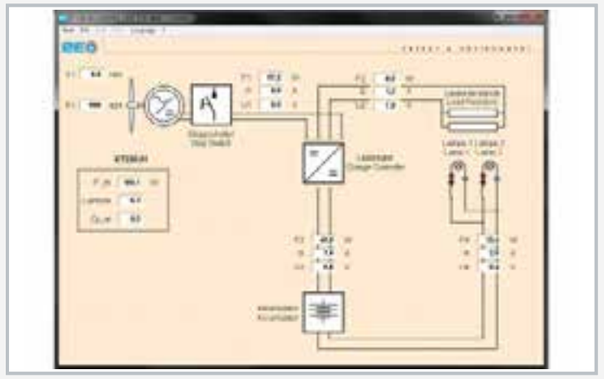

Software screenshot: display of measured values in process schematic

Specification

[1] control unit for wind power plant ET 220.01 in stand-alone operation
[2] connections for wind power plant ET 220.01 and the accumulator in ET 220.01 on the rear
[3] charge controller with overcharge protection with fixed resistors
[4] 2 lamps as electrical loads (consumers)
[5] detection and display of the wind velocity and rotor speed of ET 220.01
[6] detection of current and voltage at different points of the stand-alone system
[7] additional measuring points for current and voltage using the laboratory's own measuring equipment
[8] GUNT software for data acquisition via USB under Windows 7, 8.1, 10

Technical data

Charge controller
- nominal voltage: 12V
- max. charging voltage: 14,2V
- max. current: 40A
- control procedure: PWM

Electrical load (2 lamps)
- voltage: 12VDC
- power: 55W each

Measuring ranges
- wind velocity: 0,3...50m/s
- speed: 0...3000min^{-1}
- voltage: 0...20VDC
- current: 0...35A

230V, 50Hz, 1 phase
230V, 60Hz, 1 phase
120V, 60Hz, 1 phase
UL/CSA optional
LxWxH: 1000x550x590mm
Weight: approx. 47kg

Required for operation

PC with Windows

Scope of delivery

1 control unit
1 GUNT software CD + USB cable
1 set of instructional material

ET 222
Wind power drive train

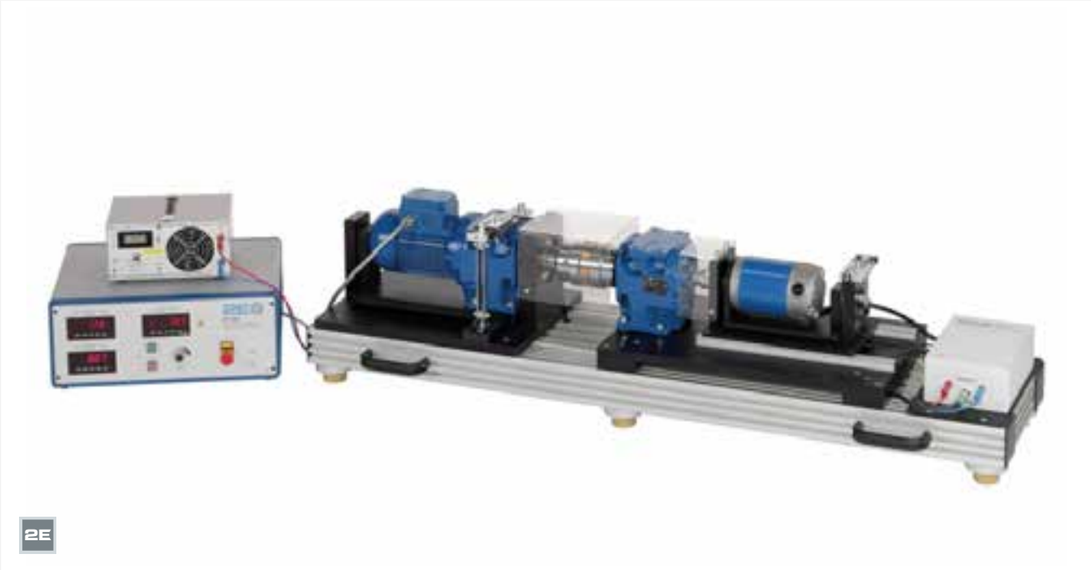

Description

- **electric motor simulates wind rotor at low speed**
- **generator with adjustable electrical load**
- **torque measurements on drive and generator**

Modern wind turbines should be optimally adapted to the wind available at their location and allow efficient operating conditions. In addition to the wind rotor itself, components of the drive train such as the transmission and the electric generator are crucial.

The ET 222 experimental unit contains a typical wind power drive train at laboratory scale, which is driven by an electric motor. The motor enables low speeds with high torque. This simulates a typical slowly rotating wind rotor. The speed can be adjusted.

The drive train consists of the slow-rotating drive side, the fast-rotating generator side and a three-stage spur gear between the drive and the generator. The electrical load of the generator can be varied.

The experiments with ET 222 simulate typical operating conditions of a drive train. To do this, the electrical load of the generator and the speed of the drive motor are varied. This makes it possible to approximate operating points of a typical torque characteristic. The calculated characteristic results from the mechanical power of a wind rotor for a given wind speed.

The generator speed and the torques of the drive side and generator are captured by sensors and displayed digitally on the measuring amplifier. The measured values are also available as analogue signals for optional external capture or processing.

Learning objectives/experiments

- conversion of rotational energy into electrical energy
- influence of torque and speed on the efficiency of the transmission
- influence of torque and speed on the efficiency of the generator
- influence of the typical torque characteristic of a wind rotor on the overall efficiency of the drive train

ET 222
Wind power drive train

1 measuring amplifier, 2 load, 3 drive motor, 4 spur gear, 5 DC generator, 6 drive torque sensor, 7 speed sensor, 8 generator torque sensor

measuring amplifier with digital displays and control elements

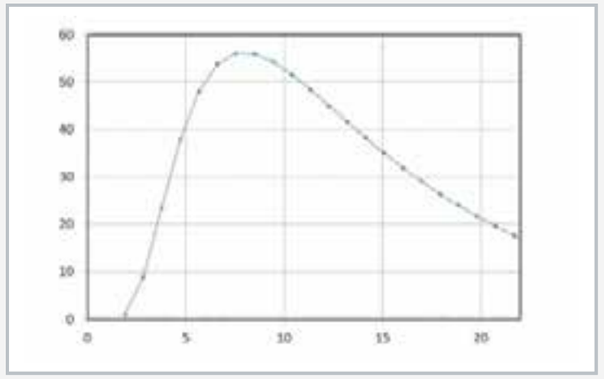

simulated torque characteristic of a wind rotor:
x axis: shaft speed in min^{-1} y axis: torque in Nm

Specification

[1] experimental unit for measurements on a wind power drive train
[2] drive train with spur gear and DC generator
[3] low-speed drive motor with adjustable speed simulates wind rotor
[4] simulation of typical torque characteristics
[5] DC generator with connections for electrical load
[6] adjustable load with switchable display for current or voltage
[7] sensors for generator speed and torques of the drive side and of the generator
[8] measuring amplifier with digital displays and control elements
[9] analogue outputs for transmitting the measured values for torque and speed

Technical data

DC generator
- rated speed: 1100min^{-1}
- max. power: 150W
- max. current: 10A
- max. voltage: 28V

Spur gear
- transmission ratio: 1:53
- rated load capacity: 335Nm
- rated efficiency: 94%

Drive motor
- rated speed: 22min^{-1}
- speed range: 3...22min^{-1}
- rated power: 0,37kW
- max. torque: 153Nm

Measuring ranges
- speed: 0...1200min^{-1}
- torque: 0...200Nm
- torque: 0...10Nm
- current: 0,005...25A
- voltage: 0...80V

230V, 50Hz, 1 phase
120V, 60Hz, 1 phase, 230V, 60Hz, 1 phase
UL/CSA optional
LxWxH: 1480x480x400mm
Weight: approx. 105kg

Scope of delivery

1 experimental unit
1 electronic load
1 measuring amplifier
1 set of cables
1 set of instructional material

Basic knowledge

Wave energy converters

Just like the wind and tides, waves are an inexhaustible source of natural energy. In contrast to wind energy, however, waves are presently rarely used to generate energy. Particularly in countries with a long, open coastline, the use of wave energy is an attractive option for the generation of electricity.

Waves are primarily created by wind. The size of the waves, and therefore also their energy content, depends on the wind velocity, the wave fetch (distance the wind has travelled over the water) and the duration of the wind's action. Waves can cover large distances and are thus able to transport energy from windy areas at sea to less windy areas on the coast.

Systems for using waves

In the past years, several systems for the energetic use of waves have been developed. To make sure that the energy is transported efficiently, these systems are installed in coastal waters or even directly on the coastline.

Until now, none of the concepts has reached market introduction. The reasons are the very high technical requirements due to the high mechanical loads. During heavy storms, waves can develop enormous power that the wave energy converters have to be able to withstand. Harsh weather conditions and the salt content of the sea place high demands on corrosion protection and the seals on electrical components. Moreover, maintenance, in particular of offshore systems, is often difficult and is affected by weather conditions.

Wave energy converters with different principles for using wave energy

1 the Pelamis "sea snake" wave energy converter harnesses the energy of the relative movements of hinge-linked buoyant elements

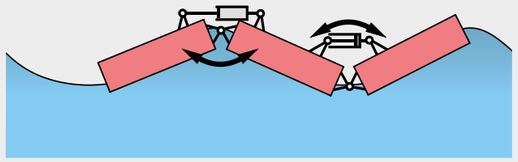

2 the wave energy buoy generates current by means of induction

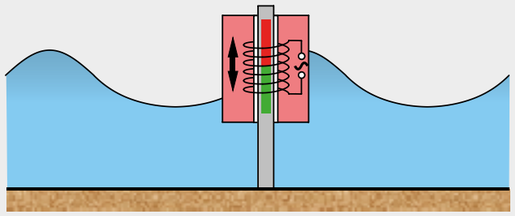

Both the "sea snake" and the "buoy" use wave energy directly. These power plants can be installed on the open sea.

3 the storage or ramp system power plant utilises potential energy from waves overriding a ramp

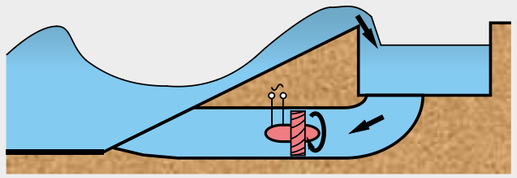

4 the OWC power plant (Oscillating Water Column) takes advantage of the movement of an air column in a pneumatic chamber

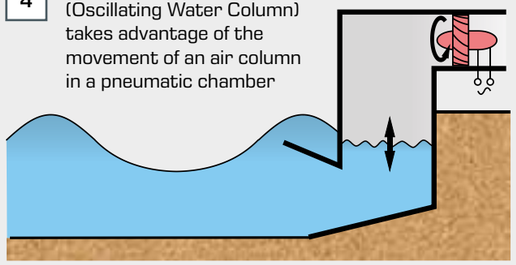

The "OWC" and "storage" principles use the energy of the wave indirectly to charge an air or water storage reservoir. This reservoir then powers a turbine. These power plants are best suited for installation in coastal areas.

Key advantages of the OWC power plant

- the power plant can be integrated into the coastline directly, e.g. as a wave breaker.
  This means that, compared to offshore systems, access to it is easy.
- the generator is run by air and does not come into direct contact with the seawater.
- the turbine of the generator is of a simple design and therefore fault-resistant.

The OWC power plant

The incoming waves are led into a chamber. A water column is set into vertical oscillation. The water column acts like a piston and pumps the air above the surface of the water back and forth through a small opening. A Wells turbine is installed inside the opening. The air, as it streams back and forth, powers the Wells turbine.

The Wells turbine is of a simple design and does not have any moving parts except for the rotor. There is no guidance system. The blades have symmetric aerofoil profiles and generate thrust by means of aerodynamic forces. Here, the direction of rotation does not depend on the direction of the air flow. The turbine is powered by both incoming and outgoing flows.

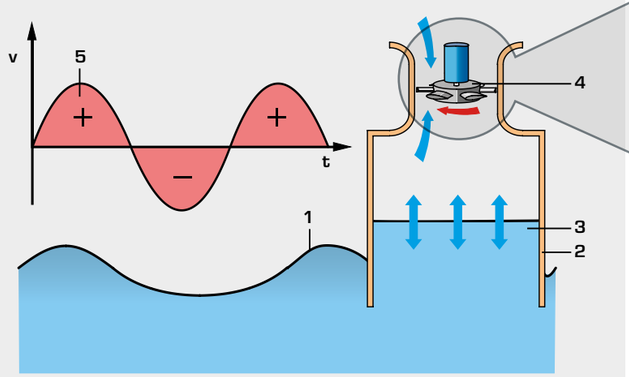

OWC power plant

1 waves, **2** chamber, **3** water column, **4** Wells turbine with generator, **5** air velocity curve in the turbine, **v** air velocity

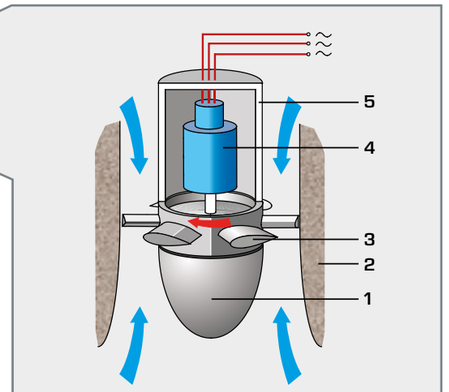

1 wave, **2** air duct, **3** rotor with blades, **4** generator, **5** housing

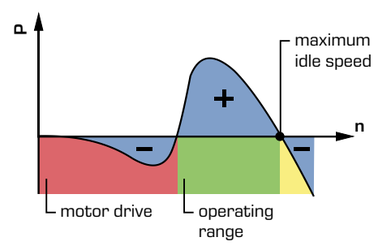

Because the incident flow is not always ideal, the turbine only generates power during a small portion of a wave period. This considerably reduces the efficiency and means that the turbine cannot start without assistance. The Wells turbine must therefore be kick-started with a motor until it has reached operating speed.

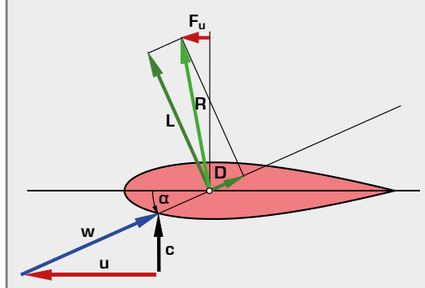

Velocities and forces in a Wells turbine

Velocities: **c** absolute air velocity, **u** circumferential velocity of the blade, **w** relative incident flow of the blade; flow forces: **L** buoyancy force, **D** drag force, **R** resulting force at the blade, **F_u** thrust force, **α** angle of attack

ET 270
Wave energy converter, OWC

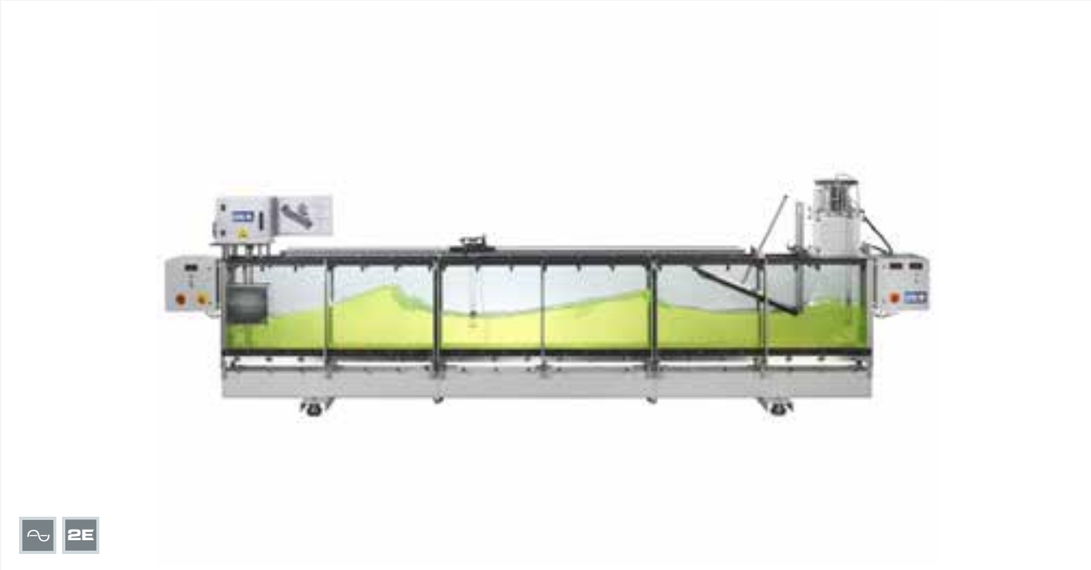

Description

- **configurable wave generator**
- **turbine unit with Wells turbine and electric generator**
- **GUNT software for operation, data acquisition and visualisation of the measurement results**

Wave energy converters use the energy from continuous wave movements for the environmentally friendly production of electricity. They can supply electrical energy along the coast, in particular to remote locations. Structurally they are easy to integrate into moles, harbour walls and coastal protection systems.

ET 270 is a laboratory-scale wave energy converter consisting of a wave generator, a wave flume and the OWC wave energy converter with turbine unit.

To generate waves in the wave flume, a displacer is moved up and down by an adjustable crank drive. The height of the waves is varied by changing the lift of the displacer. The speed of the motor sets the frequency of the waves. At the end of the wave flume a baffle plate guides the waves into the wave energy converter.

The OWC wave energy converter consists of a chamber and the turbine unit. The initiated, continuous wave motion produces an oscillating water column (OWC) within the chamber, which causes the air mass above it to move. The air flow generated in this way drives the Wells turbine. Wells turbines work independently of the direction with respect to the inflow: the flow energy is converted during both the upward and downward movement of the air.

A DC motor is connected to the turbine and is used to start the turbine up. Upon reaching a set speed, this then acts as a generator and produces electricity.

The water level, and thus the wave height, can be measured along the wave flume with a movable ultrasonic sensor. Inside the chamber there is another ultrasonic sensor used to measure the movement of the water column. Pressure measuring points in the turbine housing are used to determine the flow velocity of the air movement. The measured values can be read on digital displays. At the same time, the measured values can also be transmitted directly to a PC via USB. The data acquisition software is included.

Learning objectives/experiments

- familiarisation with operating principles of a wave energy converter
- understanding of energy generation from wave motion
- measurement of wave motions
- familiarisation with design and operation of a Wells turbine
- optimisation of operating behaviour

ET 270
Wave energy converter, OWC

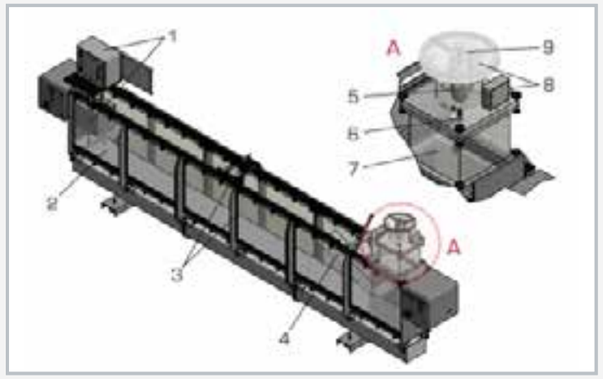

1 wave generator with displacer, 2 wave flume, 3 ultrasonic sensor, 4 baffle plate, 5 Wells turbine, 6 measuring device for amplitude of the water column, 7 chamber, 8 sensors for pressure measurement, 9 upper suspension of the turbine

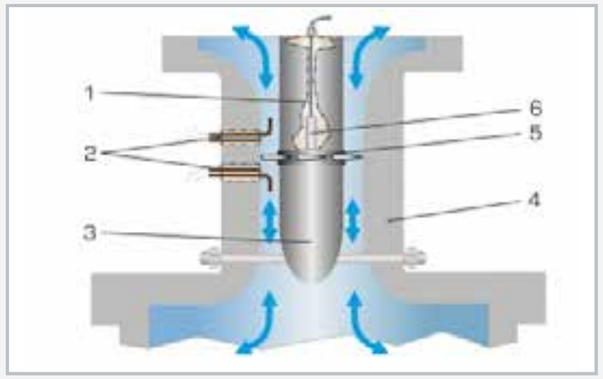

Turbine unit: 1 cable to the switch box, 2 Pitot tubes to determine flow velocity, 3 hub, 4 housing, 5 rotor, 6 generator

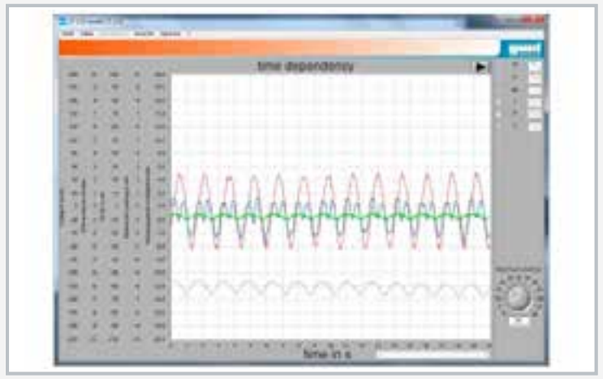

Software screenshot

Specification

[1] wave energy converter consisting of: wave generator, wave flume and wave energy converter
[2] wave generator with control unit, AC motor with adjustable frequency and adjustable lift of displacer
[3] wave height measured by ultrasound
[4] baffle plate for guiding the wave into the chamber
[5] wave energy converter with oscillating water column, chamber and turbine unit
[6] turbine unit with rotor and generator
[7] pressure measuring points to determine the flow velocity in the turbine
[8] turbine load: DC motor for starting up the turbine, switches to generator for electricity production upon reaching the target speed
[9] option of manual operation of the plant via switch boxes or digital operation via the GUNT software
[10] GUNT software for data acquisition via USB under Windows 7, 8.1, 10

Technical data

Wave generator
- power: 550W
- displacement volume: 26,5L

Wave flume
- LxWxH: 5000x300x600mm

Wells turbine
- power: 0...1000mW
- speed: 0...6000min^{-1}
- rotor: 6 blades
- outer Ø: 120mm, inner Ø: 80mm

Measuring ranges
- frequency: 0...1,83Hz (wave generator)
- wave height: 0...600mm
- level: 0...600mm (chamber)
- flow velocity: 0...26m/s
- speed: 0...6000min^{-1}
- current: ±1000mA

230V, 50Hz, 1 phase
230V, 60Hz, 1 phase
120V, 60Hz, 1 phase
LxWxH: 5850x700x2050mm
Weight: approx. 500kg

Required for operation

PC with Windows recommended

Scope of delivery

1 experimental plant
1 set of accessories
1 GUNT software CD + USB cable
1 set of instructional material

Basic knowledge

Water turbines

Basic principles of water turbines

Water turbines are mainly used in power plants to generate electrical energy. To this end, river barrages or dams use the gravitational potential energy of the dammed water, also known as pressure energy. One special application is the use in pumped storage power plants. In times of low electricity demand an elevated storage reservoir is filled with water by means of electrically driven pumps. When electricity demand is higher, the reservoir is drained and additional electricity generated by water turbines.

Water turbines are turbomachines. They convert the potential energy of the water into mechanical work. The gravitational potential energy is first converted into kinetic energy. The flowing water is accelerated to as high a speed as possible in a distributor or a nozzle. The momentum of the fluid is made usable as peripheral force by deflection in a rotor.

Depending on the location of the energy conversion a distinction is made between:

Action turbine: All of the potential energy is converted into velocity in the fixed distributor. There is no pressure gradient between the rotor inlet and the rotor outlet. The flow is only deflected in the rotor.
Example: Pelton turbine

Reaction turbine: The potential energy is converted partly in the distributor and partly in the rotor. In the rotor there is a pressure difference between inlet and outlet. The flow is deflected and accelerated in the rotor.
Examples: Francis turbine and Kaplan turbine

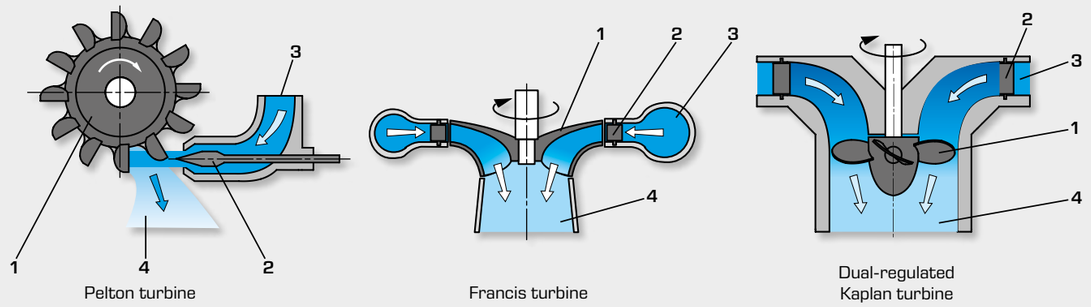

1 rotor, **2** distributor, **3** water inlet, **4** water outlet

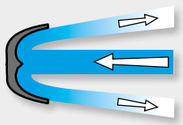

Action turbine (Pelton)

Pure deflection of the water jet in the guide vane without changing the speed

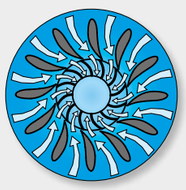

Reaction turbine (Francis)

Flow cross-section are changed. Acceleration of the water jet in guide vanes and blades

The individual turbine types have different fields of application

- Pelton turbine: very high heads, 130 m to 2000 m, dams, mountain reservoirs
- Francis turbine: average height of fall, 40 m to 730 m, dams, run-of-river power plants
- Kaplan turbine: small height of fall, 5 m to 80 m, run-of-river power plants

The drop heights stated above apply for high outputs. At low outputs the height of fall may be significantly lower. Run-of-river power plants are hydroelectric power plants without reservoirs that can be used for the operating water.

Characteristics of water turbines

The specific speed n_q is the most important characteristic for water turbines. It is a measure of the ratio of water velocity to rotational speed. A distinction is made between low-speed turbines, where the water velocity is significantly higher than the peripheral speed, and high-speed turbines, where the situation is reversed.

$$n_q = n \cdot \frac{\sqrt{Q}}{H^{3/4}}$$

Here, **n** is the rotational speed, **Q** the flow rate and **H** the head of the water turbine. The ratios are made clear in the velocity triangle. The following list shows the velocity triangles for the inlet side of the rotor. c_1 is the absolute velocity, w_1 the relative velocity of the water and u_1 the peripheral speed of the rotor.

Specific speed		Velocity triangle	Rotor shape
$n_q = 10$	Low-speed turbine	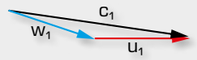	Pelton turbine
$n_q = 30$		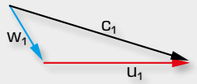	Francis turbine, low-speed
$n_q = 90$		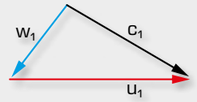	Francis turbine, high-speed
$n_q = 200$	High-speed turbine		Kaplan turbine

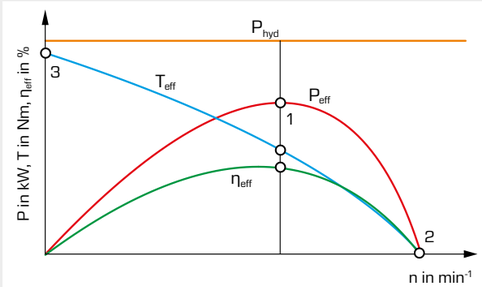

Speed-torque characteristic of a water turbine

P_{hyd} hydraulic input power of the turbine,
P_{eff} mechanical power generated in the rotor,
T_{eff} torque on the rotor,
η_{eff} efficiency of the turbine, **n** speed

Operating behaviour and operating points of a water turbine

The turbine characteristic curve shows the typical behaviour of a water turbine.

The water turbine is preferably operated at the operating point (**1**), where it has the highest efficiency. The torque in a Pelton turbine corresponds to roughly half of the stall torque (**3**). The turbine speeds up to the runaway speed (**2**) when it is not under load. This overspeed can be up to twice the design speed and may result in severe damage to the turbine. A speed controller must prevent this by closing the distributor and throttling the water supply.

HM 150.19
Operating principle of a Pelton turbine

Learning objectives/experiments

- design and function of a Pelton turbine
- determination of torque, power and efficiency
- graphical representation of characteristic curves for torque, power and efficiency

Description

- **model of an impulse turbine**
- **transparent operating area**
- **adjustable nozzle cross-section**
- **loading by band brake**

Water turbines are turbomachines utilising water power. The Pelton turbine is a type of impulse turbine; such turbines convert the pressure energy of water into kinetic energy entirely in the distributor. During the conversion, the water jet is accelerated in a nozzle and directed onto the blades of the Pelton wheel tangentially. The water jet is redirected by approximately 180° in the blades. The impulse of the water jet is transmitted to the Pelton wheel.

HM 150.19 is a model of a Pelton turbine demonstrating the function of an impulse turbine.

The experimental unit consists of the Pelton wheel, a needle nozzle used as distributor, a band brake for loading the turbine and a housing with a transparent front panel. The transparent cover enables to observe the water flow, the Pelton wheel and the nozzle during operation. The nozzle cross-section and thus the flow rate are modified by adjusting the nozzle needle.

The turbine torque is determined by force measurement on a band brake and is read on spring balances. For measuring the rotational speed, a non-contact speed sensor, e.g. HM 082, is required. A manometer shows the water pressure at the turbine inlet.

The experimental unit is positioned easily and securely on the work surface of the HM 150 base module. The water is supplied and the flow rate measured by HM 150. Alternatively, the experimental unit can be operated by the laboratory supply.

HM 150.19
Operating principle of a Pelton turbine

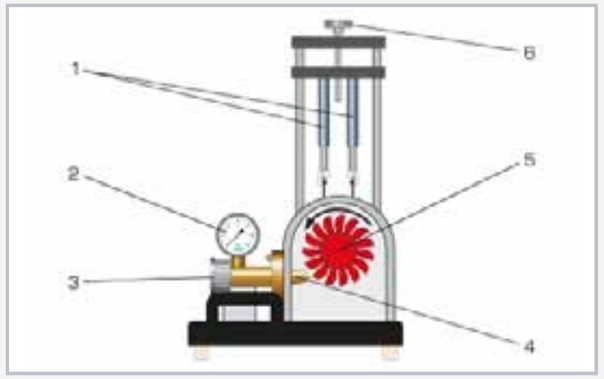

1 spring balance, 2 manometer, 3 adjustment of the nozzle cross-section, 4 needle nozzle, 5 Pelton wheel, 6 adjustment of the band brake

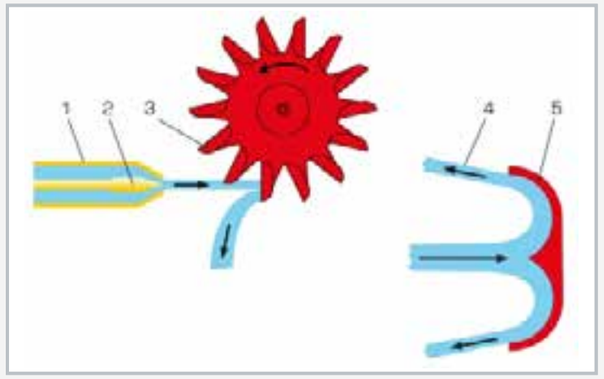

Operating principle of the Pelton turbine:
1 needle nozzle, 2 adjustable nozzle needle, 3 blade on the Pelton wheel, 4 redirected water jet, 5 profile of the blade

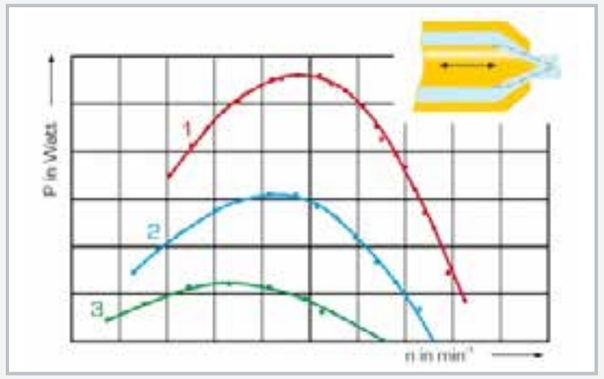

Turbine output curves at different positions of the nozzle needle:
1: Q=31,6L/min, 2: Q=18,8L/min, 3: Q=11,5L/min;
n speed, P turbine output

Specification

[1] function of a Pelton turbine
[2] transparent front panel for observing the operating area
[3] loading the turbine by use of the band brake
[4] adjustable nozzle needle for setting different nozzle cross-sections
[5] marking on brake drum for non-contact speed measurement
[6] instruments: spring balances for determining the torque, manometer shows pressure at turbine inlet
[7] flow rate determination by base module HM 150
[8] water supply using base module HM 150 or via laboratory supply

Technical data

Pelton turbine
- output: 5W at 500min^{-1}, approx. 30L/min, H=2m
- Pelton wheel
  - 14 blades
  - blade width: 33,5mm
  - external Ø: 132mm

Needle nozzle
- jet diameter: 10mm

Measuring ranges
- force: 2x 0...10N
- pressure: 0...1bar

LxWxH: 400x400x620mm
Weight: approx. 15kg

Required for operation

HM 150 (closed water circuit) or water connection, drain

Scope of delivery

1 experimental unit
1 set of instructional material

HM 150.20
Operating principle of a Francis turbine

Learning objectives/experiments

- design and function of a Francis turbine
- determination of torque, power and efficiency
- graphical representation of characteristic curves for torque, power and efficiency

Description

- **model of a reaction turbine**
- **transparent operating area**
- **turbine with adjustable guide vanes**
- **loading by band brake**

Water turbines are turbomachines utilising water power. The Francis turbine is a type of reaction turbine which converts the pressure energy of the water into kinetic energy in the distributor and in the rotor. The water is fed in the distributor by means of a spiral housing. The flowing water is accelerated in the distributor by the adjustable guide vanes and directed onto the blades. The redirection and further acceleration of the water in the rotor generates an impulse which is transmitted to the rotor.

HM 150.20 is the model of a Francis turbine demonstrating the function of a reaction turbine.

The experimental unit consists of the rotor, the distributor with adjustable guide vanes, a band brake for loading the turbine and a housing with a transparent front panel. The transparent cover enables to observe the water flow, the rotor and the guide vanes during operation. The angle of attack and thus the power of the rotor are modified by adjusting the guide vanes.

The turbine torque is determined by force measurement on a band brake and is read on spring balances. For measuring the rotational speed, a non-contact speed sensor, e.g. HM 082, is required. A manometer shows the water pressure at the turbine inlet.

The experimental unit is positioned easily and securely on the work surface of the HM 150 base module. The water is supplied and the flow rate measured by HM 150. Alternatively, the experimental unit can be operated by the laboratory supply.

HM 150.20
Operating principle of a Francis turbine

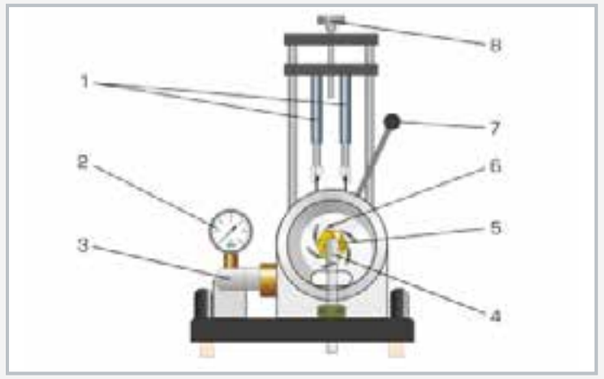

1 spring balance, 2 manometer, 3 water inlet, 4 water outlet, 5 rotor, 6 guide vanes, 7 adjustment of the guide vanes, 8 adjustment of the band brake

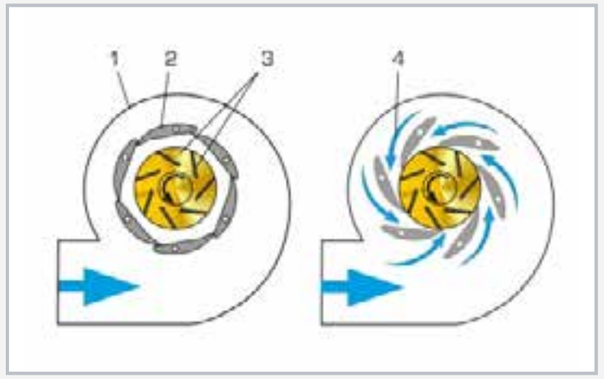

Operating principle of the Francis turbine: 1 spiral housing, 2 guide vane, 3 rotor with blades, 4 flow; on the left: guide vane position closed, Q=0, P=0; on the right: guide vane position open, Q=max., P=max.

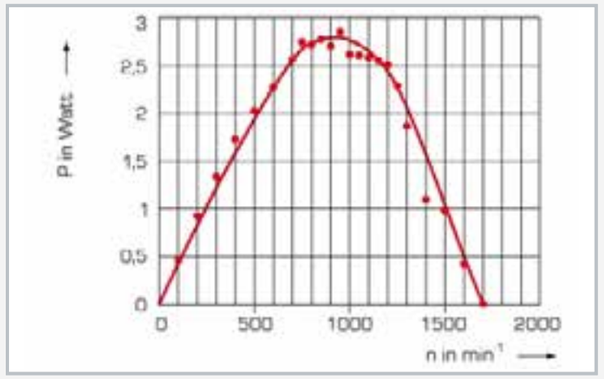

Characteristic curve for power output on the turbine shaft; P turbine power output, n speed

Specification

[1] function of a Francis turbine
[2] transparent front panel for observing the operating area
[3] loading the turbine by use of the band brake
[4] adjustable guide vanes for setting different angles of attack
[5] marking on brake drum for non-contact speed measurement
[6] instruments: spring balances for determining the torque, manometer shows pressure at turbine inlet
[7] flow determination by base module HM 150
[8] water supply using the base module HM 150 or via lab supply

Technical data

Turbine
- output: 12W at n=1100min^{-1}, approx. 40L/min, H=8m
- rotor
  - 7 blades
  - blade width: 5mm
  - external Ø: 50mm
- guide vanes
  - 6 vanes, adjustable (20 stages)

Measuring ranges
- force: 2x 0...10N
- pressure: 0...1,0bar

LxWxH: 400x400x630mm
Weight: approx. 17kg

Required for operation

HM 150 (closed water circuit) or water connection, drain

Scope of delivery

1 experimental unit
1 set of instructional material

HM 287
Experiments with an axial turbine

Description

- **illustrative model of an axial turbine**
- **transparent turbine housing**
- **adjustable, wear-free eddy current brake as turbine load**
- **GUNT software for data acquisition, visualisation and operation**
- **part of the GUNT-Labline fluid energy machines**

The axial turbine operates as a reaction turbine as used in gas tubines and steam turbines. The water flows through a stator where it is deflected and accelerated. Then, the water hits then the blades where it delivers kinetic energy and pressure energy and puts the rotor in motion. The water pressure steadily decreases from the inlet to the outlet.

The trainer provides the basic experiments to get to know the operating behaviour and the most important characteristic variables of axial turbines.

HM 287 features a closed water circuit with an axial turbine, a centrifugal pump and a water tank. The stator and the rotor of the turbine are mounted in a transparent housing and can be observed during operation.

The loading device is outside of the housing. The eddy current brake generates a defined load. The eddy current brake is specially developed by GUNT. It is wear-free and can be finely adusted. The flow rate is adjusted using a valve.

The trainer is fitted with a sensor for pressure (turbine inlet). The torque produced by the turbine is determined via an electronic force sensor. The speed is measured with an optical speed sensor. The flow rate is determined by an orifice plate with differential pressure measurement. The microprocessor-based measuring technique is well protected in the housing. The measured values are transmitted directly to a PC via USB where they can be analysed using the software included.

All the advantages of software-supported experiments with operation and evaluation are offered by the GUNT software and the microprocessor.

Learning objectives/experiments

- principle of operation of an axial turbine
- determination of the power output
- determination of the efficiency
- recording of the characteristic curve
- comparison of experiment and calculation

HM 287
Experiments with an axial turbine

1 valve for adjusting the flow rate, 2 switch cabinet, 3 flow rate measurement with measuring orifice and differential pressure measurement, 4 pump, 5 tank, 6 eddy current brake, 7 axial turbine

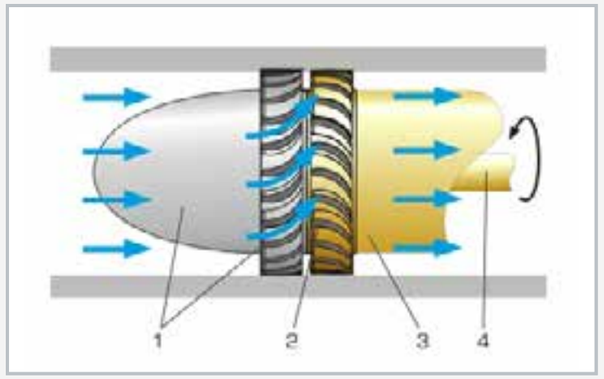

Principle of operation of an axial turbine: 1 stator, 2 rotor, 3 housing, 4 shaft

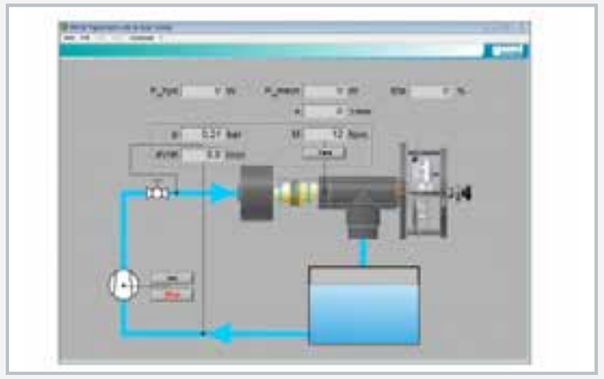

Operating interface of the powerful software

Specification

[1] functioning and operating behaviour of an axial turbine
[2] closed water circuit contains axial turbine, pump and water tank
[3] transparent housing for observing the stator and the rotor
[4] turbine load using the wear-free and adjustable eddy current brake
[5] valve for adjusting the volumetric flow rate
[6] force sensor to determine the torque on turbine shaft
[7] measurement of turbine speed with optical speed sensor
[8] pressure measurement on inlet side
[9] determination of volumetric flow rate using differential pressure measurement across a measuring orifice
[10] due to integrated microprocessor-based instrumentation no additional devices with error-prone wiring are required
[11] display and evaluation of the measured values as well as operation of the unit via software
[12] GUNT software with control functions and data acquisition via USB under Windows 7, 8.1, 10

Technical data

Axial turbine
- power output: approx. 130W at 3500min^{-1}
- rotor, outer diameter: 50mm
- blade length: 5mm

Pump
- power consumption: 1,02kW
- max. flow rate: approx. 375L/min
- max. head: 13,7m

Measuring orifice
- diameter: 44mm
- differential pressure sensor: 0...0,1bar

Measuring ranges
- flow rate: 500L/min
- pressure (inlet): 0...5bar
- torque: 0...2Nm

230V, 50Hz, 1 phase
120V, 60Hz, 1 phase
UL/CSA optional
LxWxH: 1200x800x950mm
Weight: approx. 135kg

Required for operation

PC with Windows

Scope of delivery

1 trainer
1 GUNT software CD + USB cable
1 set of instructional material

HM 288
Experiments with a reaction turbine

The illustration shows HM 288 on top of the water tank in HM 290.

Description

- **illustrative model of a water turbine according to the reaction principle**
- **adjustable, wear-free eddy current brake as turbine load**
- **GUNT software for data acquisition, visualisation and operation**
- **part of the GUNT-Labline fluid energy machines**

The conversion of pressure energy into kinetic energy in the rotor is characteristic for reaction turbines.

The experimental unit is placed upon the base unit HM 290. The two units together provide the basic experiments to get to know the operating behaviour and the most important characteristic variables of reaction turbines.

The water jet discharged from the rotor which drives the turbine according to the reaction principle can be observed during operation. This facilitates the understanding of the principle of operation and the underlying laws (eg. momentum).

HM 288 consists of a rotor mounted in a transparent housing and a loading device outside of the housing. The eddy current brake generates a defined load. The eddy current brake is specially developed by GUNT. It is wear-free and can be finely adusted.

The torque delivered by the turbine is determined via an electronic force sensor. The speed is measured with an optical speed sensor. The measuring values are transferred to the base unit HM 290.

The water supply and the flow rate measurement are realised with the base unit HM 290. A pressure control included in HM 290 enables the recording of characteristics at a constant head.

All the advantages of software-supported experiments and evaluation are offered by the GUNT software in HM 290.

Learning objectives/experiments

- principle of operation of a reaction turbine
- characteristic curves at constant head
  - relationship between torque and speed
  - efficiency dependent on speed
  - flow rate dependent on speed
  - hydraulic power and mechanical power depending on speed
- evaluation of measuring values and characteristics based on the theory

HM 288
Experiments with a reaction turbine

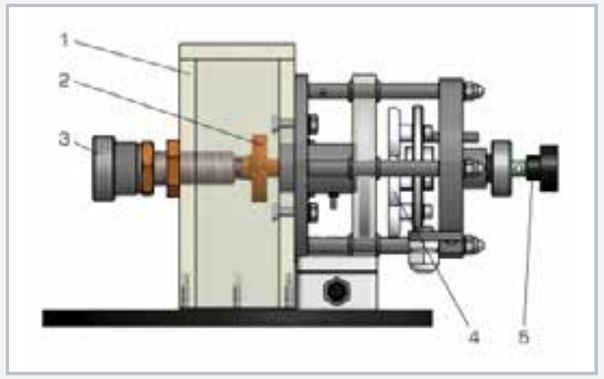

1 transparent housing, 2 rotor, 3 water supply, 4 eddy current brake, 5 adjustment of the eddy current brake

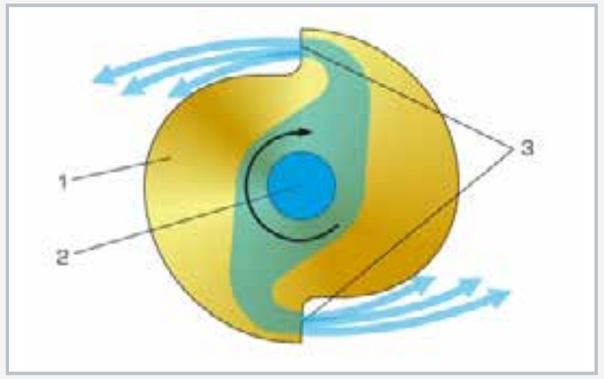

Principle of operation of a reaction turbine
1 rotor, 2 water inlet via hub, 3 water outlet via tangential nozzles

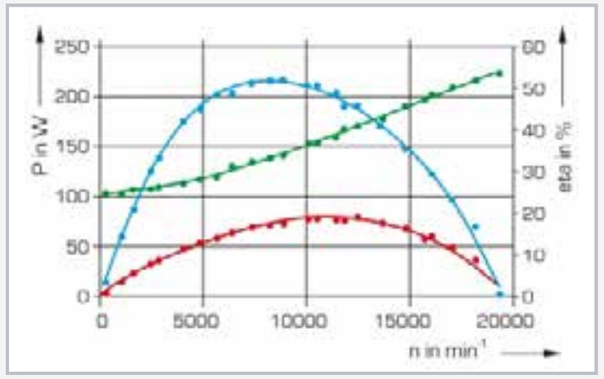

Characteristic curves of the reaction turbine dependent on the speed
red: mechanical power P_{mech}, blue: efficiency, green: hydraulical power P_{hydr}; P power, eta efficiency, n speed

Specification

[1] turbine to place upon the base unit HM 290
[2] functioning and operating behaviour of a reaction turbine
[3] transparent housing for observing the discharged water jet
[4] constant pressure of the turbine represents in practice the head and is adjusted via HM 290
[5] turbine load using the wear-free and adjustable eddy current brake
[6] force sensor to determine the torque on turbine shaft
[7] optical speed sensor for measuring the turbine speed
[8] water supply, flow rate measurement and unit-specific software data acquisition and operation via HM 290

Technical data

Turbine
- power output: approx. 60W at 8000min^{-1}
- rotor diameter: 50mm

Measuring ranges
- torque: 0...0,5Nm
- speed: 0...20000min^{-1}

LxWxH: 360x250x180mm
Weight: approx. 5kg

Scope of delivery

1 experimental unit
1 set of instructional material

HM 291
Experiments with an action turbine

The illustration shows HM 291 on top of the water tank in HM 290.

Description

- **illustrative model of an axial constant-pressure turbine**
- **adjustable, wear-free eddy current brake as turbine load**
- **GUNT software for data acquisition, visualisation and operation**
- **part of the GUNT-Labline fluid energy machines**

Action turbines operate according to the principle of equal pressure. The static pressures at the inlet and at the outlet of the rotor are equal.

The experimental unit is placed upon the base unit HM 290. The two units together provide the basic experiments to get to know the operating behaviour and the most important characteristic variables of action turbines.

The water jets are discharged at high velocity from the four nozzles of the distributor. The water jets are deflected in the rotor and put it in motion. The axially discharged water from the rotor can be observed.

HM 291 consists of a rotor, mounted in a transparent housing, a distributor with four nozzles and a loading device outside of the housing. The number of active nozzles can be adjusted by valves. The eddy current brake generates a defined load. The eddy current brake is specially developed by GUNT. It is wear-free and can be finely adusted.

The torque delivered by the turbine is determined via an electronic force sensor. The speed is measured with an optical speed sensor. The measuring values are transferred to the base unit HM 290.

The water supply and the flow rate measurement are realised with the base unit HM 290. A pressure control included in HM 290 enables the recording of characteristics at a constant head.

All the advantages of software-supported experiments and evaluation are offered by the GUNT software in HM 290.

Learning objectives/experiments

- principle of operation of an action turbine
- characteristic curves at constant head
  - relationship between torque and speed
  - efficiency dependent on speed
  - flow rate dependent on speed
  - hydraulic power and mechanical power dependent on speed
- evaluation of measuring values and characteristics based on the theory
- partial load behaviour with controlling the number of nozzles in comparison to throttle control

HM 291
Experiments with an action turbine

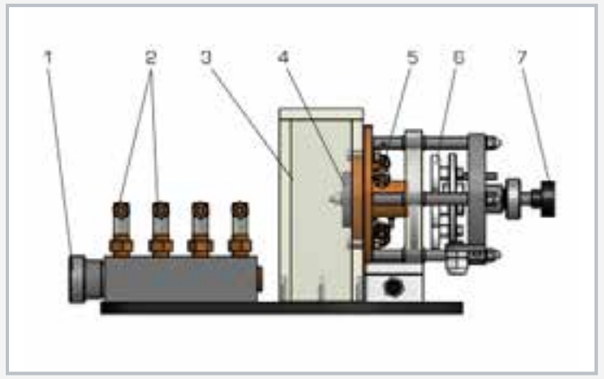

1 water supply, 2 nozzle valves, 3 transparent housing, 4 rotor, 5 distributor with 4 nozzles, 6 eddy current brake, 7 adjustment of the eddy current brake

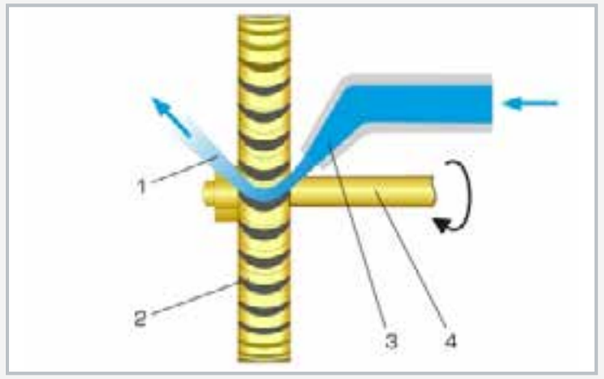

Principle of operation of an action turbine
1 water outlet, 2 rotor, 3 water inlet from four nozzles, 4 turbine shaft

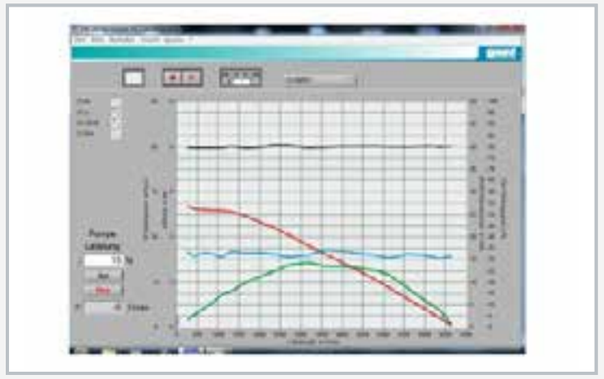

Software screenshot: characteristic curbes of the action turbine dependent on speed

Specification

[1] turbine to place upon the base unit HM 290
[2] functioning and operating behaviour of an action turbine
[3] transparent housing for observing the rotor
[4] distributor with 4 nozzles, active nozzles adjustable by valves
[5] constant pressure of the turbine represents in practice the head and is adjusted via HM 290
[6] turbine load using the wear-free and adjustable eddy current brake
[7] force sensor to determine the torque on turbine shaft
[8] optical speed sensor for measuring the turbine speed
[9] water supply, flow rate measurement and unit-specific software data acquisition and operation via HM 290

Technical data

Turbine
- power output: approx. 28W at 3600min^{-1}
- rotor diameter: 50mm

Measuring ranges
- torque: 0...0,5Nm
- speed: 0...9000min^{-1}

LxWxH: 420x320x180mm
Weight: approx. 7kg

Scope of delivery

1 experimental unit
1 set of instructional material

HM 289
Experiments with a Pelton turbine

The illustration shows HM 289 on top of the water tank in HM 290.

Description

- **illustrative model of a Pelton turbine**
- **adjustable, wear-free eddy current brake as turbine load**
- **GUNT software for data acquisition, visualisation and operation**
- **part of the GUNT-Labline fluid energy machines**

Pelton turbines are types of impulse turbine. They are driven by free jet nozzles. In the nozzles, the water is strongly accelerated. Ambient pressure exists at the nozzle outlet.

The experimental unit is placed upon the base unit HM 290. The two units together provide the basic experiments to get to know the operating behaviour and the most important characteristic variables of Pelton turbines.

The water jet is accelerated in a nozzle and hits the Pelton wheel tangentially. In the blades on the circumference of the Pelton wheel the water jet is deflected by approximately 180°. The impulse of the water jet is transmitted to the Pelton wheel.

HM 289 consists of a Pelton wheel and a needle nozzle, mounted in a transparent housing. The needle nozzle can be adjusted during operation. The loading device is outside of the housing. The eddy current brake generates a defined load. The eddy current brake is specially developed by GUNT. It is wear-free and can be finely adusted.

The torque delivered by the turbine is determined via an electronic force sensor. The speed is measured with an optical speed sensor. The measuring values are transferred to the base unit HM 290.

The water supply and the flow rate measurement are realised with the base unit HM 290. A pressure control included in HM 290 enables the recording of characteristics at a constant head.

All the advantages of software-supported experiments and evaluation are offered by the GUNT software in HM 290.

Learning objectives/experiments

- principle of operation of a Pelton turbine
- characteristic at constant head
  - relationship between torque and speed
  - efficiency dependent on speed
  - flow rate dependent on speed
  - hydraulic power and mechanical power dependent on speed
- evaluation of measuring values and characteristics based on the theory
- partial load behaviour with needle control in comparison to throttle control

HM 289
Experiments with a Pelton turbine

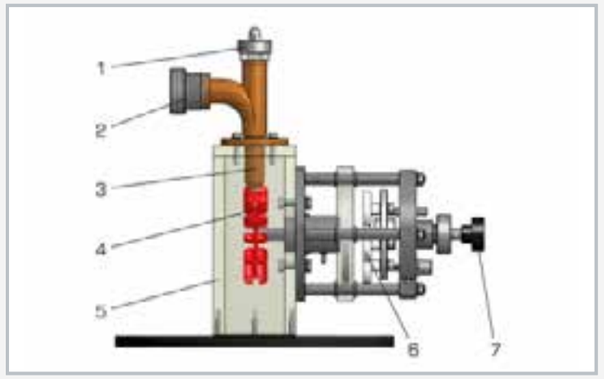

1 adjustment of the needle nozzle, 2 water supply, 3 needle nozzle, 4 Pelton wheel, 5 transparent housing, 6 eddy current brake, 7 adjustment of the eddy current brake

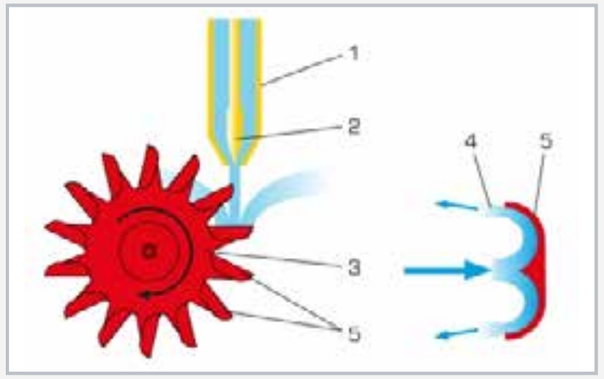

Principle of operation of a Pelton turbine
1 needle nozzle, 2 adjustable nozzle needle, 3 Pelton wheel, 4 deflected water jet, 5 impinged blade

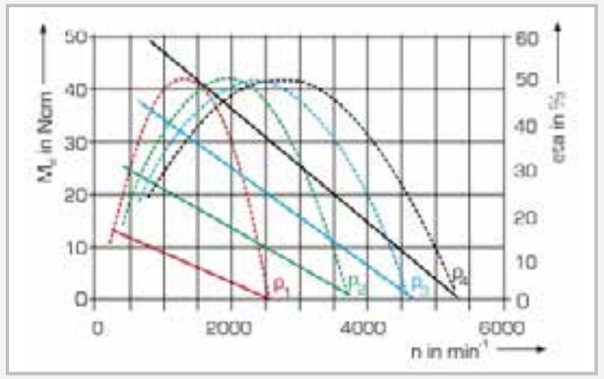

Characteristic curves of the Pelton turbine at different pressures (p_1...p_4); torque (continuous lines) and efficiency (dashed lines) dependent on speed; M_d torque, n speed, eta efficiency

Specification

[1] turbine to place upon the base unit HM 290
[2] functioning and operating behaviour of a Pelton turbine
[3] transparent housing for observing the Pelton wheel and needle nozzle
[4] different nozzle cross-sections via adjustable nozzle needle
[5] constant pressure of the turbine represents in practice the head and is adjusted via HM 290
[6] turbine load using the wear-free and adjustable eddy current brake
[7] force sensor to determine the torque on turbine shaft
[8] optical speed sensor for measuring the turbine speed
[9] water supply, flow rate measurement and unit-specific software data acquisition and operation via HM 290

Technical data

Pelton turbine
- power output: approx. 70W at 2700min^{-1}
- wheel diameter: 70mm

Measuring ranges
- torque: 0...0,5Nm
- speed: 0...9000min^{-1}

LxWxH: 350x250x300mm
Weight: approx. 5kg

Scope of delivery

1 experimental unit
1 set of instructional material

HM 290
Base unit for turbines

Description

- **closed water circuit for supplying turbines**
- **GUNT software for data acquisition, visualisation and operation**
- **basic experiments on centrifugal pumps**
- **part of the GUNT-Labline fluid energy machines**

The base unit HM 290 is required to supply different turbines. Additionally, the base unit enables basic experiments on a centrifugal pump.

The closed water circuit of HM 290 features a water tank and a centrifugal pump with variable speed via a frequency converter. The turbine to be investigated (HM 288, HM 289, HM 291) is placed on the tank cover and is connected to the base unit via a hose. The flow rate hence the pressure applied to the turbine is adjusted by pump speed. The head and the pressure upstream of the turbine can be kept constant by a pressure control. A damping plate inside the tank ensures a low air entry into the circulating water. Basic pump experiments can be performed using the throttle valve included. The throttle valve is placed upon the tank cover instead of the turbine.

The base unit is fitted with sensors for pressure and flow rate. The microprocessor-based measuring technique is well protected in the housing. The measured values are transmitted directly to a PC via USB where they can be analysed using the software included.

All the advantages of software-supported experiments with operation and evaluation are offered by the GUNT software and the microprocessor.

Following turbines are available: a reaction turbine (HM 288), a Pelton turbine (HM 289) and an action turbine (HM 291).

Learning objectives/experiments

- basic experiments on a centrifugal pump
- together with the turbines HM 288, HM 289 or HM 291
  - determination of typical turbine curves
  - performance curves at varying turbine speeds
  - determination of efficiencies

HM 290
Base unit for turbines

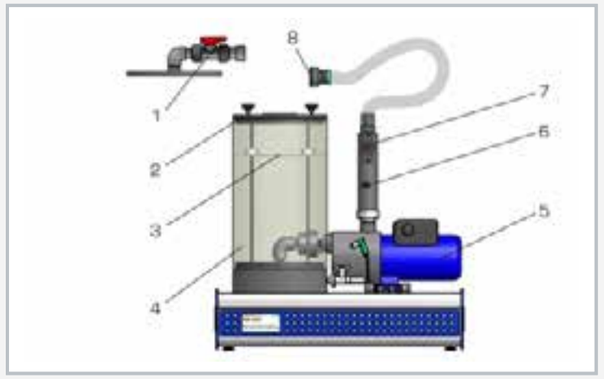

1 throttle valve for pump experiments, 2 tank cover, 3 damping plate, 4 water tank, 5 pump with motor, 6 pressure sensor, 7 flow meter, 8 water connection

The illustration shows the base unit HM 290 together with the reaction turbine HM 288. The turbines HM 289 or HM 291 can be investigated after easily interchanging them.

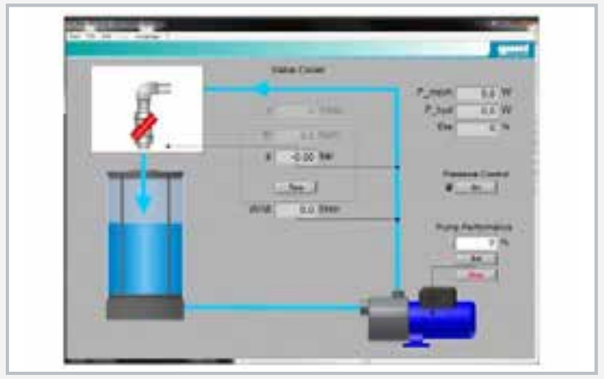

Operating interface of the powerful software: experiment with the pump

Specification

[1] supplying the turbines HM 288, HM 289 or HM 291 with water under pressure
[2] basic experiments on centrifugal pumps
[3] together with the turbines: investigation of operating behaviour and recording of turbine characteristics
[4] includes pump and transparent water tank
[5] low air entry into circulating water ensured by damping plate inside the tank
[6] variable pump speed via frequency converter
[7] sensors for flow rate and pressure
[8] due to integrated microprocessor-based instrumentation no additional devices with error-prone wiring are required
[9] display and evaluation of the measured values as well as operation of the unit via software
[10] GUNT software with control functions and data acquisition via USB under Windows 7, 8.1, 10

Technical data

Pump
- power consumption: 670W
- max. flow rate: 70L/min
- max. head: 35,4m

Water tank: approx. 15L

Measuring ranges
- flow rate: 3,9...50L/min
- pressure: -1...5bar

230V, 50Hz, 1 phase
230V, 60Hz, 1 phase; 120V, 60Hz, 1 phase
UL/CSA optional
LxWxH: 670x600x630mm
Weight: approx. 37kg

Required for operation

PC with Windows

Scope of delivery

1 experimental unit
1 GUNT software CD + USB cable
1 set of instructional material

HM 365.31
Pelton and Francis turbine

Description

- **comparison of impulse and reaction turbines**
- **constant speeds and torques can be adjusted in combination with HM 365**
- **part of the GUNT-FEMLine**

Water turbines are turbomachines utilising water power. They convert pressure and flow energy into mechanical energy and mostly are used for driving electrical generators. Water turbines can be divided into impulse and reaction turbines depending on their operating principle.

The HM 365.31 accessories contain a Pelton turbine as an example for an impulse turbine and a Francis turbine as an example for a reaction turbine. The two turbine types are examined and compared with each other together with the supply unit HM 365.32 and the brake unit HM 365. The brake unit offers the possibility to set constant speeds resp. torques. Thus you can realise experiments in different realistic operating modes.

The Pelton turbine is a free-jet turbine which converts the pressure energy of the water into kinetic energy entirely in the distributor. As the complete pressure difference is reduced exclusively in the nozzle, the pressure is constant in the Pelton wheel. The turbine is also known as a constant pressure turbine. The turbine output is adjusted by adjusting the nozzle cross-section.

The Francis turbine converts the pressure energy of the water into kinetic energy in the distributor and in the rotor. The pressure at the rotor inlet is higher than at the rotor outlet. The turbine output is adjusted by adjusting the guide vanes.

HM 365.32 provides the water supply, the pressure measurement at the turbine inlet and the flow rate measurement. In order to measure the pressure at the turbine outlet, the Francis turbine is equipped with an additional pressure sensor. The brake unit HM 365 measures the braking torque and the speed.

Learning objectives/experiments

- in combination with HM 365 and HM 365.32
  - comparison of impulse and reaction turbines
  - determination of the mechanical and hydraulic power
  - determination of the efficiency
  - recording of characteristic curves
  - influence of the nozzle cross-section of the Pelton turbine on the characteristics
  - influence of the guide vane position of the Francis turbine on the characteristics

HM 365.31
Pelton and Francis turbine

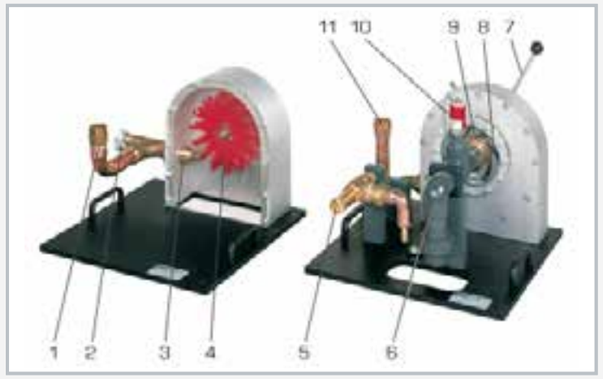

1 water inlet, 2 adjustment of the nozzle cross-section, 3 nozzle, 4 Pelton wheel, 5 safety valve, 6 water outlet, 7 lever for adjusting the guide vanes, 8 guide vanes, 9 rotor of Francis turbine, 10 pressure sensor at the turbine outlet, 11 water inlet

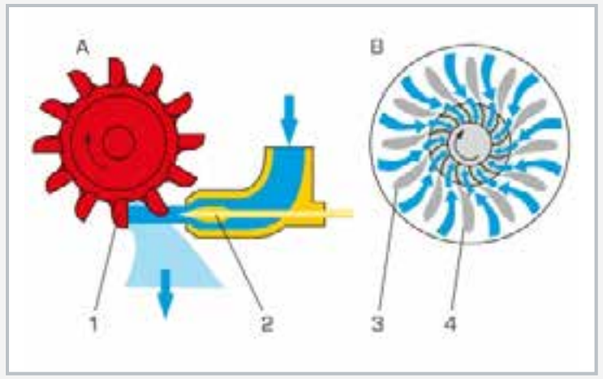

A operating principle of the Pelton turbine: 1 Pelton wheel with blades, 2 adjustable nozzle needle; B operating principle of the Francis turbine: 3 guide vanes, 4 rotor

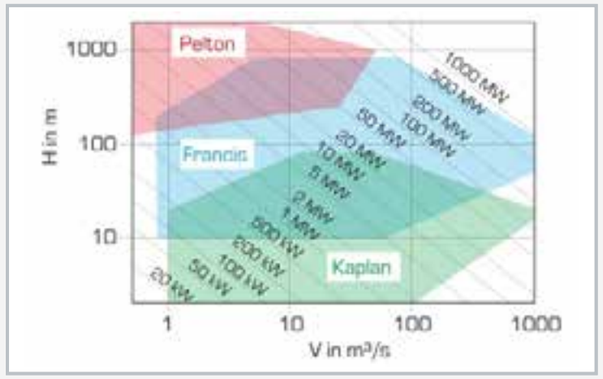

Operative ranges of the different turbine types in practice; H head, V flow rate

Specification

[1] comparison of a Pelton turbine as impulse turbine and a Francis turbine as reaction turbine
[2] operation by use of the HM 365.32 Turbine supply unit
[3] turbine load by use of the HM 365 Universal brake and drive unit
[4] constant torques and speeds can be adjusted with HM 365
[5] transparent front panel in the turbines for observing the operating area
[6] adjustable nozzle needle for setting different nozzle cross-sections (Pelton turbine)
[7] adjustable guide vanes for setting different angles of incidence (Francis turbine)
[8] pressure sensor at the Francis turbine for measuring the pressure at the turbine outlet
[9] digital display for flow rate, pressure and temperature in HM 365.32
[10] braking torque and speed measured in HM 365

Technical data

Transmission ratio between brake and turbine: 1,44:1

Pelton turbine
- output: 1,5kW at 2750min^{-1} at 6,5bar
- wheel diameter: 165mm
- variable nozzle setting

Francis turbine
- output: 1kW at 3500min^{-1} and 4,2bar
- rotor diameter: 80mm
- variable guide vane setting

Measuring ranges
- pressure (outlet): 0...1,6bar

LxWxH: 590x370x490mm (Pelton turbine)
Weight: approx. 25kg
LxWxH: 560x510x400mm (Francis turbine)
Weight: approx. 50kg

Scope of delivery

1 Pelton turbine
1 Francis turbine

HM 365.32
Turbine supply unit

Description

- **closed water circuit for supplying turbines**
- **different operating modes can be selected via HM 365**
- **GUNT software for data acquisition and visualisation**
- **part of the GUNT-FEMLine**

Together with HM 365.31, the HM 365.32 supply unit can be used to operate a Pelton or Francis turbine, whose characteristic operating behaviour can then be investigated.

The separate turbines from HM 365.31 are placed on the working surface of the supply unit and screwed in place. The turbine is connected to the supply unit via a hose. After the water has flowed through the turbine, it flows back into the tank. Thanks to its closed water circuit, the trainer is independent from the mains water supply and can be used in mobile applications. The flow rate and/or the pressure present at the turbine can be adjusted by a flow control valve.

The supply unit is equipped with sensors for pressure and flow rate. The measured values are displayed digitally. The mechanical turbine output is measured via the HM 365 Universal Drive and Brake Unit, which is also required. The brake unit is used to adjust constant speeds or torques, allowing experiments to be carried out in different operating modes.

The measured values are read from digital displays on the supply unit and can be transmitted simultaneously via USB directly to a PC where they can be analysed using the software included.

Learning objectives/experiments

- in conjunction with HM 365 and a Pelton or Francis turbine from HM 365.31
  - determination of the mechanical output of the turbines
  - determination of the hydraulic output of the turbines
  - determine the efficiencies of the turbines
  - plot characteristic curves
  - influence of the guide vane position on the characteristic curve when using the Francis turbine
  - influence of the nozzle cross-section on the characteristic curve when using the Pelton turbine

HM 365.32
Turbine supply unit

1 turbine water supply, 2 tank, 3 centrifugal pump, 4 pressure measuring point, 5 temperature measuring point, 6 flow control valve, 7 flowmeter

1 measuring amplifier with digital display of measured values, 2 HM 365 Universal Drive and Brake Unit, 3 HM 365.32, 4 HM 365.31 Pelton and Francis Turbine

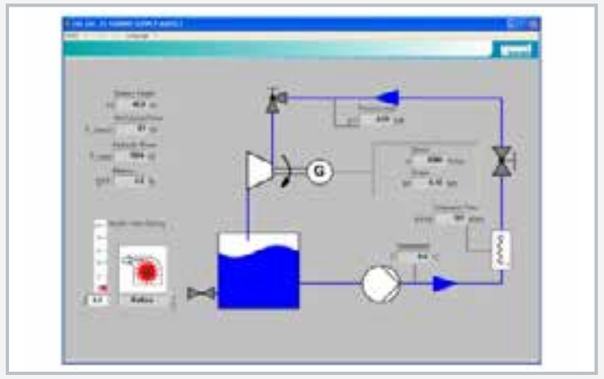

Software screenshot: process schematic

Specification

[1] supply unit for turbines from HM 365.31
[2] closed water circuit contains multistage centrifugal pump, tank, inductive flowmeter and flow control valve
[3] connection to the turbines via flexible hose with quick-release coupling
[4] constant torques and speeds can be adjusted via HM 365
[5] digital display for flow rate, pressure and temperature
[6] braking torque and speed measured in HM 365
[7] GUNT software for data acquisition via USB under Windows 7, 8.1, 10

Technical data

Centrifugal pump, 3 stages
- power consumption: 3kW
- max. flow rate: $29m^3/h$
- max. head: 45m
- speed: $2900min^{-1}$

Tank: 96L

Measuring ranges
- pressure (turbine inlet): -1...9bar
- pressure (Francis turbine outlet): 0...1,6bar
- temperature: 0...100°C
- flow rate: 0...600L/min

400V, 50Hz, 3 phases
230V, 60Hz, 3 phases
LxWxH: 1300x800x1200mm
Empty weight: approx. 120kg

Required for operation

PC with Windows recommended

Scope of delivery

1 trainer
1 measuring amplifier
1 GUNT software CD + USB cable
1 hose with quick-release couplings
1 set of instructional material

HM 450C
Characteristic variables of hydraulic turbomachines

Hydraulic turbomachines are a type of fluid energy machine. They work continuously and feature a steady pressure difference between inlet and outlet. HM 450C is a modular trainer for basic experiments in the field of hydraulic turbomachines. HM 450C forms the base unit. A centrifugal pump is included, which is used to conduct experiments on the topic of driven machines. A closed water circuit means the trainer can be used anywhere.

The trainer is equipped with all major sensors for data acquisitions in order to ensure meaningful results. Key measuring values are displayed during the experiments on displays on the trainer and on a PC.

Measurement analyses such as dimensionless parameters and pump characteristics can be displayed and saved on a PC using the GUNT software.

A special feature of HM 450C is the ability to operate pump and turbine at the same time. Relevant measured values are recorded contemporaneously at both turbomachines. Thus the trainer can be used as a **pumped storage plant**.

HM 450C as a pure pump trainer

The Pelton turbine HM 450.01 and Francis turbine HM 450.02 offer an expansion to the range of experiments on the topic of driving machines. The two turbines are easy to install on the trainer. They are connected with handles on the delivery side of the centrifugal pump. The sensors are connected via plugs on the trainer's switch cabinet.

HM 450.01
Pelton turbine

HM 450.02
Francis turbine

HM 450C
trainer with
water turbines

Adjusting the guide vanes of a Francis turbine

Flow measurement with electromagnetic sensor

Centrifugal pump with measurement of the drive torque

Band brake on the turbine

Needle nozzle and impeller of the Pelton turbine

Adjusting knob for the needle nozzle

Position of the guide vanes in the Francis turbine

Vanes and impeller of the Francis turbine

HM 450C
Characteristic variables of hydraulic turbomachines

The illustration shows HM 450C together with the two turbines HM 450.01 (left) and HM 450.02 (right).

Description

- **characteristic variables of water turbines and centrifugal pumps**
- **pelton turbine HM 450.01 and Francis turbine HM 450.02 extend the scope of experiments**
- **pumped storage plant**

Turbomachines such as pumps and turbines are energy converters. Turbines convert flow energy into mechanical energy and pumps convert mechanical energy into flow energy.

HM 450C can be used to investigate a centrifugal pump. Experiments can be performed on two key water turbine designs: Pelton and Francis turbine, available as accessories HM 450.01 and HM 450.02.

The closed water circuit comprises a tank, a standard centrifugal pump with variable speed and a flow control valve to adjust the back pressure.

The speed is detected contact-free by means of an inductive displacement sensor on the motor shaft. To determine the drive power, the drive motor is mounted on swivel bearings and equipped with a force sensor to measure the drive torque. Pressures at the inlet and outlet of the pump are measured. The flow rate is measured by means of an electromagnetic flow meter. The measured values are displayed digitally and processed further on a PC. The PC is used to calculate the power output data of the examined turbomachine and to represent them in characteristics.

One of the turbines HM 450.01 or HM 450.02 can also be placed on top of the storage tank. The centrifugal pump supplies the turbine with water. The measured values of the turbine are transfered via cable to HM 450C. A special feature of HM 450C is the ability to operate pump and turbine at the same time. Relevant measured values are recorded contemporaneously at both turbomachines. Thus the trainer can be used as a pumped storage plant.

Learning objectives/experiments

- centrifugal pump
  - measuring inlet and outlet pressures of the pump
  - determining delivery height
  - determining hydraulic output
  - determining mechanical output
  - recording characteristics at various speeds
  - determining the efficiency
- with accessories Pelton turbine HM 450.01 or Francis turbine HM 450.02
  - measuring torque and speed
  - determining efficiency of the turbine
  - recording characteristics
  - demonstration of a pumped storage plant

HM 450C
Characteristic variables of hydraulic turbomachines

1 electromagnetic flow meter, 2 flow control valve, 3 storage tank, 4 ressure sensor at pump inlet, 5 centrifugal pump, 6 drive motor including measurement of torque, 7 pressure sensor at pump outlet, 8 switch cabinet with displays and controls

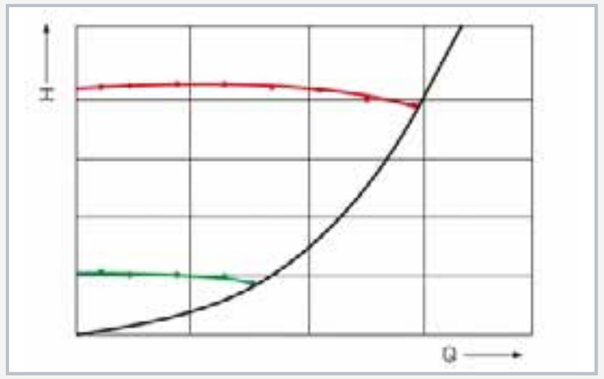

Pump characteristics: H head, Q flow rate; red: characteristics at n=2900min^{-1}, green: characteristics at n=1450min^{-1}, black: system characteristic

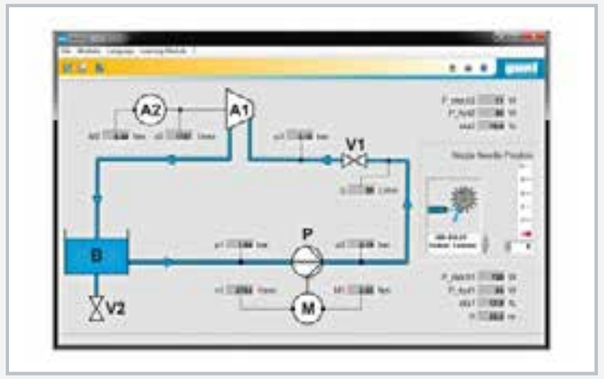

Software screenshot: Francis turbine process schematic

Specification

[1] determining characteristic variables of a centrifugal pump
[2] determining characteristic variables of water turbines together with the accessories HM 450.01 and HM 450.02
[3] experiments on a pump in a closed water circuit with storage tank and flow control valve to adjust the back pressure
[4] experiments on turbines: closed water circuit for supplying turbines
[5] pipes and fittings made of PVC
[6] 3-phase AC motor for pump with variable speed via frequency converter
[7] non-contact speed measurement at the turbine shaft and force sensor at the brake for measuring the torque
[8] digital displays for pressures, flow rate, speed and torque
[9] GUNT software for data acquisition via USB under Windows 7, 8.1, 10

Technical data

Standard centrifugal pump
- max. head: 23,9m
- max. flow rate: 31m^3/h

Drive motor with variable speed
- power output: 2,2kW
- speed range: 0...3000min^{-1}

Storage tank: 250L

Measuring ranges
- pressure: 2x 0...4bar abs.
- flow rate: 0...40m^3/h
- torque: 0...20Nm
- speed: 2x 0...4000min^{-1}

230V, 50Hz, 1 phase
230V, 60Hz, 1 phase
230V, 60Hz, 3 phases
UL/CSA optional
LxWxH: 1900x790x1900mm
Weight: approx. 243kg

Required for operation

PC with Windows recommended

Scope of delivery

1 trainer
1 GUNT software CD + USB cable
1 set of instructional material

HM 450.01
Pelton turbine

Description

- **Pelton turbine with visible operating area**
- **closed water circuit and data processing software for use with the HM 450C trainer**

The Pelton turbine is a type of free-jet resp. impulse turbine which convert the pressure energy of water into kinetic energy entirely in the distributor. Pelton turbines are used at large heads and relatively low flow rates. The turbine power is adjusted by means of the nozzle cross-section. In practice, Pelton turbines are used for driving synchronous generators, where they run at constant speed.

The Pelton turbine HM 450.01 is an accessory for the HM 450C trainer. The experimental unit consists of the Pelton wheel, a needle nozzle used as distributor, a band brake for loading the turbine and a housing with a transparent front panel. The transparent cover enables you to observe the water flow, the Pelton wheel and the nozzle during operation. You can change the nozzle cross-section and thus the flow rate by adjusting the nozzle needle.

The pressure at the turbine inlet is recorded with a pressure sensor. A force sensor and a speed sensor are attached to the band brake. Thus, the mechanical power output of the turbine can be determined. Speed, torque and pressure are displayed on the switch cabinet of HM 450C and processed further in the software. Water supply and flow rate measurement are provided by HM 450C.

Learning objectives/experiments

- determination of mechanical output
- determination of efficiency
- recording of characteristic curves
- investigation of the influence of the nozzle cross-section on the power output

HM 450.01
Pelton turbine

1 band brake, 2 pressure sensor, 3 handwheel for adjusting the brake, 4 handwheel for adjusting the nozzle cross-section, 5 needle nozzle, 6 water inlet, 7 connecting cable to HM 450C, 8 Pelton wheel

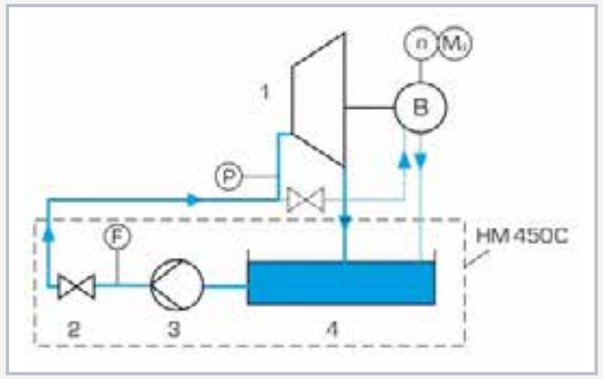

1 Pelton turbine, 2 flow control valve, 3 pump, 4 tank; blue dashed lines: cooling water; B brake; F flow rate, P pressure, n speed, M_d torque

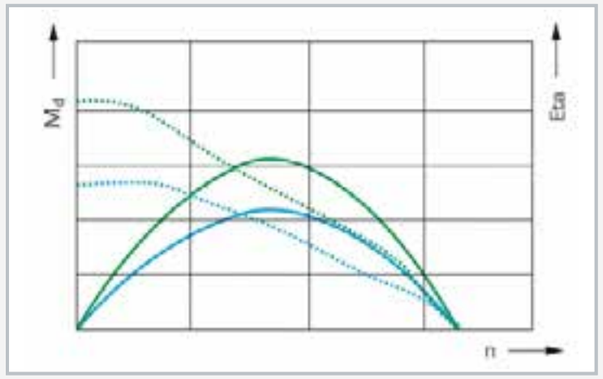

Efficiency and torque (dashed lines) depending on the speed at different powers and fully opened nozzle: green: 100% power, blue: 65% power, Eta: efficiency, n speed, M_d torque

Specification

[1] recording the curves of a Pelton turbine and investigating the influence of the nozzle cross-section
[2] transparent front panel for observing the operating area
[3] loading the turbine by use of a band brake
[4] adjustable nozzle needle for setting different nozzle cross-sections
[5] non-contact speed measurement at the turbine shaft and force sensor at the brake for measuring the torque
[6] force sensor at the turbine inlet
[7] speed, torque and pressure displayed on the switch cabinet of HM 450C
[8] water supply, flow rate measurement and data processing software via HM 450C

Technical data

Turbine
- output: approx. 350W at 1000min^{-1}, 150L/min, H=20m
- max. speed: 1500min^{-1}
- Pelton wheel
  - 14 blades
  - medium diameter: 165mm

Measuring ranges
- torque: 0...9,81Nm
- pressure: 0...4bar abs.
- speed: 0...4000min^{-1}

LxWxH: 600x490x410mm
Weight: approx. 27kg

Scope of delivery

1 experimental unit
1 set of instructional material

HM 450.02
Francis turbine

Description

- **Francis turbine with visible operating area**
- **closed water circuit and data processing software for use with the HM 450C trainer**

The Francis turbine is part of the reaction turbines which convert the pressure energy of water into kinetic energy in the distributor and in the rotor. Francis turbines are used at medium heads and large flow rates. The turbine power is controlled by adjusting the guide vanes. In practice, Francis turbines are used in run-of-the river power plants and in storage power plants.

The Francis turbine HM 450.02 is an accessory for the HM 450C trainer. The experimental unit consists of the rotor, the distributor with adjustable guide vanes, a band brake for loading the turbine and the spiral housing with a transparent front panel. The transparent cover enables you to observe the water flow, the rotor and the guide vanes during operation. The angle of attack and the cross-section of flow are adapted to the speed and power of the turbine by adjusting the guide vanes.

The pressure at the turbine inlet is recorded with a pressure sensor. A force sensor and a speed sensor are attached to the band brake. Thus, the mechanical power output of the turbine can be determined. Speed, torque and pressure are displayed on the switch cabinet of HM 450C and processed further in the software. Water supply and flow rate measurement are provided by HM 450C.

Learning objectives/experiments

- determination of mechanical output
- determination of efficiency
- recording of characteristic curves
- investigation of the influence of the guide vane position on the power output
- velocity triangles

HM 450.02
Francis turbine

1 band brake, 2 pressure sensor, 3 handwheel for adjusting the brake, 4 water inlet, 5 connecting cable to HM 450C, 6 water outlet, 7 rotor, 8 guide vanes, 9 lever for adjusting the guide vanes

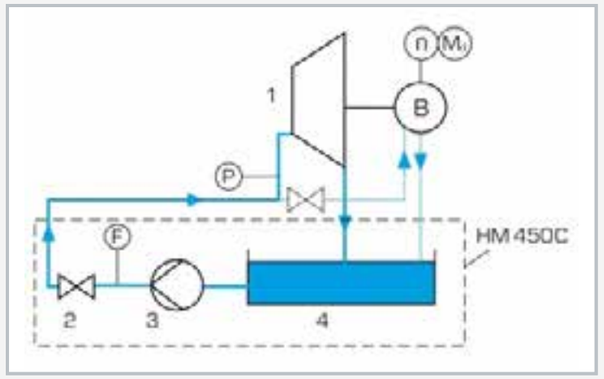

1 Francis turbine, 2 flow control valve, 3 pump, 4 tank; blue dashed lines: cooling water; B brake; F flow rate, P pressure, n speed, M_d torque

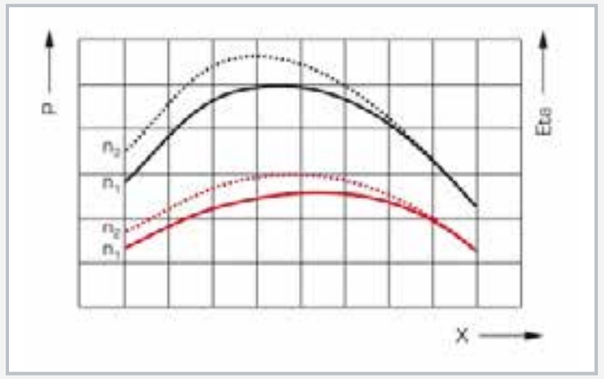

Efficiency and mechanical power depending on the guide vane position at different speeds: black: power output, red: efficiency; n speed, Eta efficiency, P mechanical power, X guide vane position

Specification

[1] recording the curves of a Francis turbine and investigating the influence of the guide vane position
[2] transparent front panel for observing the operating area
[3] loading the turbine by use of the band brake
[4] adjustable guide vanes for setting different angles of attack
[5] recording the torque via band brake and force sensor
[6] force sensor at the turbine inlet
[7] speed, torque and pressure displayed on the switch cabinet of HM 450C
[8] water supply, flow rate measurement and data processing software via HM 450C

Technical data

Turbine
- output: approx. 350W at 1500min^{-1}, 270L/min, H=15m
- max. speed: 3000min^{-1}
- rotor
  - 11 blades
  - medium diameter: 60mm
- distributor
  - 7 vanes
  - angle of attack: 0...20°

Measuring ranges
- torque: 0...9,81Nm
- pressure: 0...4bar abs.
- speed: 0...4000min^{-1}

LxWxH: 510x490x410mm
Weight: approx. 38kg

Scope of delivery

1 experimental unit
1 set of instructional material

HM 430C
Francis turbine trainer

Description

- **characteristics of a powerful Francis turbine**
- **optimal view of the operating area of the turbine**
- **adjustable guide vanes for setting the output**

The Francis turbine belongs to the reaction turbines which convert pressure energy of the working medium into kinetic energy in the guide vanes and in the rotor. Francis turbines are used for medium heads. The turbine power is controlled by adjusting the guide vanes. In practice, Francis turbines are used in run-of-river power plants and in pumped storage plants.

HM 430C enables examinations of the function and operating behaviour of a Francis turbine. The dimensions of the trainer guarantee realistic measured values. The closed water circuit consists of a tank with optional cooling, a centrifugal pump and a flow control valve for adjusting the inlet pressure. The transparent operating area of the turbine enables an optimal view of water flow, rotor and guide vanes during operation.

By adjusting the guide vanes the angle of attack, the cross-section and thus the output of the turbine are changed. An asynchronous machine is used as a generator for loading the turbine. A pump with variable speed via frequency converter provides for an energy efficient operation.

The speed of the turbine is recorded by means of an inductive, non-contact position sensor at the generator shaft. The generator is equipped with a pendulum bearing and with a force sensor to determine the torque.

The pressures at the inlet and outlet of the turbine, the temperature and the flow rate are recorded by sensors. The measured values are displayed digitally and can be processed further on a PC.

The output data of the examined turbine are determined and can be represented by characteristic curves.

Learning objectives/experiments

- investigation of the conversion of hydraulic into mechanical energy
- determination of the mechanical power and hydraulic power of the turbine
- determination of efficiency
- recording of characteristic curves
- investigation of the influence of the guide vane position
- velocity triangles

HM 430C
Francis turbine trainer

1 asynchronous machine, 2 pump, 3 tank, 4 pressure display at turbine outlet, 5 turbine, 6 adjustment of guide vanes, 7 pressure display at turbine inlet, 8 flow control valve, 9 switch cabinet with displays and controls

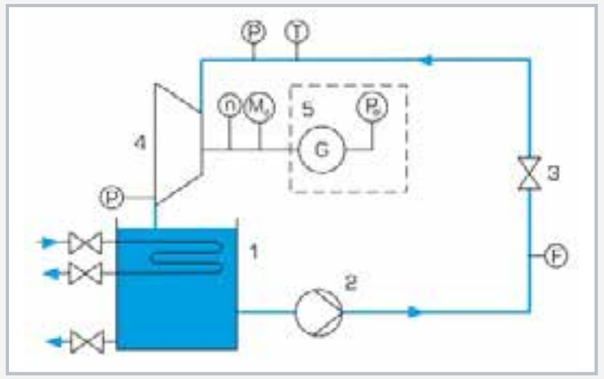

1 tank with optional cooling, 2 centrifugal pump, 3 flow control valve, 4 Francis turbine, 5 generator; P pressure, T temperature, F flow rate, n speed, M_d torque, P_{el} electrical power

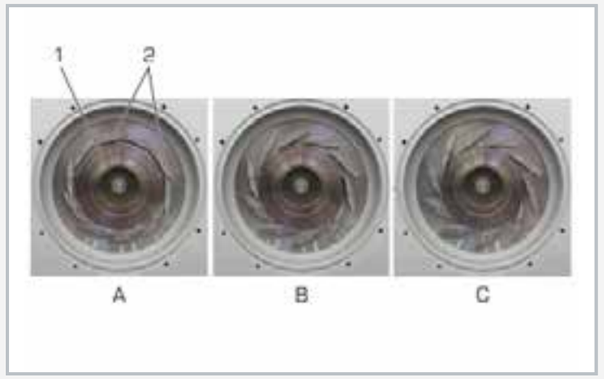

Front view of the Francis turbine: 1 rotor, 2 adjustable guide vanes; guide vane position: A closed, B half open, C open

Specification

[1] investigation of a Francis turbine
[2] closed water circuit with pump, motor, flow control valve and tank with optional cooling
[3] pump with variable speed via frequency converter
[4] adjustment of flow rate via flow control valve
[5] loading the turbine by use of the asynchronous machine as generator
[6] rotor and guide vanes of the turbine completely visible
[7] adjustable guide vanes for setting different angles of attack
[8] non-contact speed measurement at the generator haft and force sensor for measuring the driving torque
[9] digital display for temperature, flow rate and ressures (additional manometer within scope of supply), speed, torque and electrical power of generator
[10] GUNT software for data acquisition via USB under Windows 7, 8.1, 10

Technical data

Francis turbine
- hydraulic power: 2,1kW at 1500min^{-1}
- mechanical power: approx. 1,4kW at 1500min^{-1}
- rotor, D: 120mm, 15 blades
- 10 guide vanes, angle of attack adjustable: 0...23°

Centrifugal pump, multistage
- variable speed
- power consumption: 5,5kW
- max. flow rate 900L/min
- pump head 42m

Asynchronous machine as generator
- output: 2,2kW at 1440min^{-1}

Tank: 550L

Measuring ranges
- temperature:: 0...100°C
- pressure (inlet): ±1bar (turbine)
- pressure (outlet): 0...6bar (turbine)
- flow rate: 0...1000L/min
- torque: 0...20Nm
- speed: 0...3000min^{-1}
- power: 0...2200W (generator)

400V, 50Hz, 3 phases
400V, 60Hz, 3 phases, 230V, 60Hz, 3 phases
UL/CSA optional
LxWxH: 2350x1050x2050mm
Weight: approx. 580kg

Required for operation

PC with Windows recommended

Scope of delivery

1 trainer
1 GUNT software CD + USB cable
1 set of instructional material

HM 421
Kaplan turbine trainer

Learning objectives/experiments

- determination of power output curves at different speeds
  - hydraulic power output
  - mechanical power output
- determination of the head
- determination of turbine efficiency
- investigation of the influence of the guide vane position on power output and efficiency

Description

- **characteristics of a Kaplan turbine**
- **adjustable guide vanes for setting the power output**
- **GUNT software for data acquisition**

Water turbines are turbomachines which convert water energy into mechanical energy. Mostly, they are used for driving generators for power generation purposes. The Kaplan turbine is a reaction turbine with an axial through flow. It has a high specific speed and is suitable for large water flows and small to medium heads. Therefore, the Kaplan turbine is used as a "classic" water turbine in run-of-the-river power plants.

The HM 421 helps to investigate the characteristic behaviour of a simple-regulated Kaplan turbine during operation. The trainer is provided with a closed water circuit with tank, submersible pump and throttle valve for adjusting the flow rate. The angle of attack of the rotor, and thus the power output of the turbine, are changed by adjusting the guide vanes. The turbine is loaded with a wear-free eddy current brake.

The speed is captured by means of an inductive, non-contact position sensor at the turbine shaft. For determining the turbine power, the eddy current brake is equipped with a force sensor for torque measurement. The pressures at the inlet and outlet of the turbine, the temperature and the flow rate are recorded with sensors. The recorded measured values are displayed digitally and processed further in a PC. The PC is used to calculate the power output data of the examined turbine and to represent them in characteristic curves.

HM 421
Kaplan turbine trainer

1 lever for adjusting the guide vanes, 2 Kaplan turbine, 3 brake, 4 tank with submersible pump, 5 flow rate sensor, 6 handwheel for throttle valve, 7 switch cabinet, 8 level indicator for tank

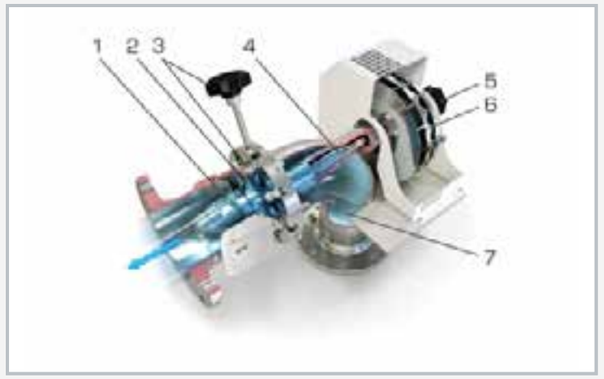

Sectional drawing of a Kaplan turbine
1 rotor with fixed blades, 2 adjustable guide vanes, 3 adjustment of guide vanes, 4 turbine shaft, 5 adjustment of the brake, 6 eddy current brake, 7 water inlet

Software screenshot

Specification

[1] function of a Kaplan turbine
[2] closed water circuit with submersible pump, throttle valve and tank
[3] adjustment of flow rate with throttle valve
[4] loading the turbine by use of air-cooled eddy current brake
[5] rotor with fixed blades
[6] adjustable guide vanes for setting different angles of attack
[7] non-contact speed measurement at the turbine shaft and force sensor at the brake for measuring the torque
[8] digital display for pressures, temperature, flow rate, speed and torque
[9] GUNT software for data acquisition via USB under Windows 7, 8.1, 10

Technical data

Kaplan turbine
- max. output: 1000W
- max. speed: 3700min^{-1}
- distributor

8 guide vanes, adjustable: -15°...45°
external Ø: 120mm,
internal Ø: 60mm
- rotor, 4 blades, fixed

external Ø: 120mm,
internal Ø: 60mm,
pitch: 80mm

Submersible pump with motor
- max. flow rate: 250m^3/h
- max. pump head: 11m
- nominal power: 3,1kW

Tank: approx. 350L

Measuring ranges
- temperature: 0...100°C
- pressure (at turbine inlet): 0...1bar rel.
- pressure (at turbine outlet): -1...0,6bar rel.
- flow rate: 13...200m^3/h
- torque: 0...10Nm
- speed: 0...6500min^{-1}

400V, 50Hz, 3 phases
LxWxH: 1450x1250x1650mm
Weight: approx. 430kg

Required for operation

PC with Windows recommended

Scope of delivery

1 trainer
1 GUNT software CD + USB cable
1 set of instructional material

HM 405
Axial-flow turbomachines

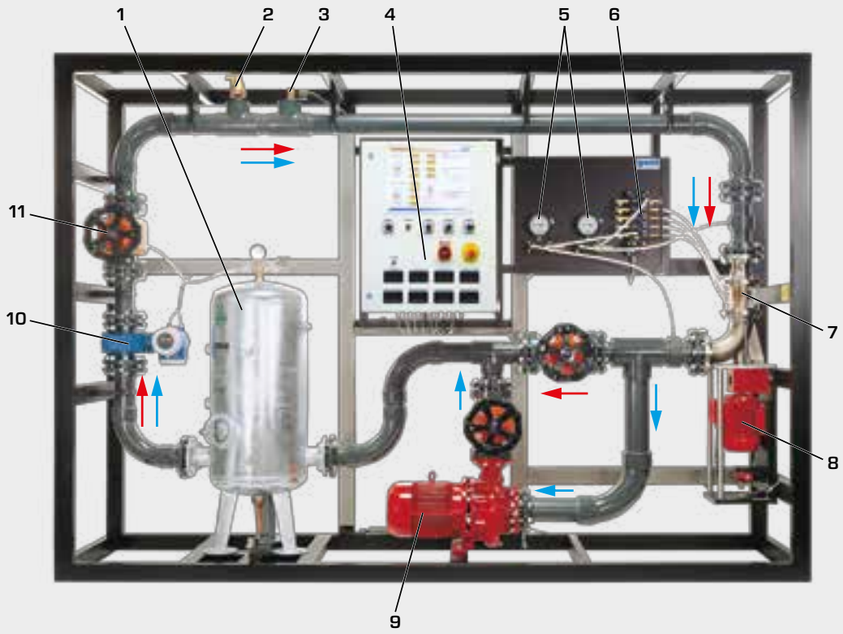

1 water tank with air cushion,
2 bleed valve,
3 solenoid valve for venting,
4 switch cabinet with displays and controls,
5 manometer for inlet and outlet pressure,
6 differential pressure sensor,
7 axial turbomachine,
8 motor/generator with torque measurement,
9 centrifugal pump for turbine operation,
10 electromagnetic flow meter,
11 valve for flow adjustment;

red arrows pump operation,
blue arrows turbine operation

The experimental plant HM 405 illustrates the function of an axial turbine with interchangeable rotors and stators. By replacing these, the turbomachine can be operated as a turbine or pump. Different rotors and stators respectively impellers and guide vane systems are provided so that their influence on the power characteristics can be investigated.

The housing is made of transparent material in order to provide insight into the flow processes upstream, between and downstream of rotor and stator respectively impeller and guide vane system.

In turbine mode the electric motor operates as a generator to generate electricity. In pump mode it operates as a drive for the pump. The electricity produced from the generator is fed into the centrifugal pump for turbine operation.

Practical experiments and calculations on the following topics can be performed depending on the operating mode:

- record characteristics
- determine dimensionless characteristic variables
- velocity triangles and pressure curves
- investigation of energy conversion within the turbomachine
- how blade / vane shape affects power and efficiency
- determine the outlet angular momentum and its effect on the power
- cavitation effects

The system can be depressurised in order to attach the guide vanes and blades. In this way the pump is emptied with no loss of water. The water runs back into the tank. Admitting compressed air to the tank refills the system. The compressed air is also used to adjust the upstream pressure. An automatic bleed valve removes the remaining air from the pipe system.

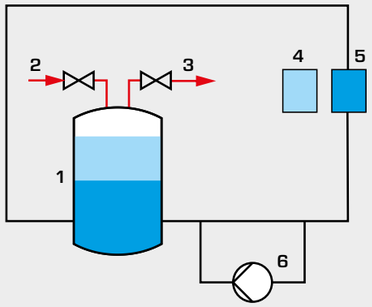

1 water tank with air cushion, **2** compressed air, **3** bleeding,
4 empty turbomachine, **5** filled turbomachine, **6** centrifugal pump;
refill system,
drain system

The 3-hole probe (1) can be used to measure the direction and velocity in the flow field directly upstream of, between and downstream of rotor and stator respectively impeller and guide vane system. These values are used to record the velocity triangles for the blade / vane shapes.

Varying load, speed and flow rate offers a wide range of experiments.

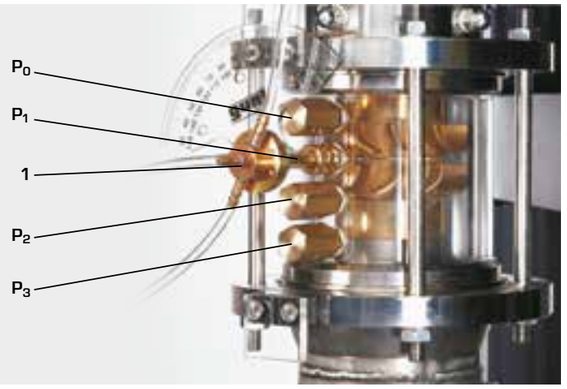

Velocity triangles on turbines or pumps

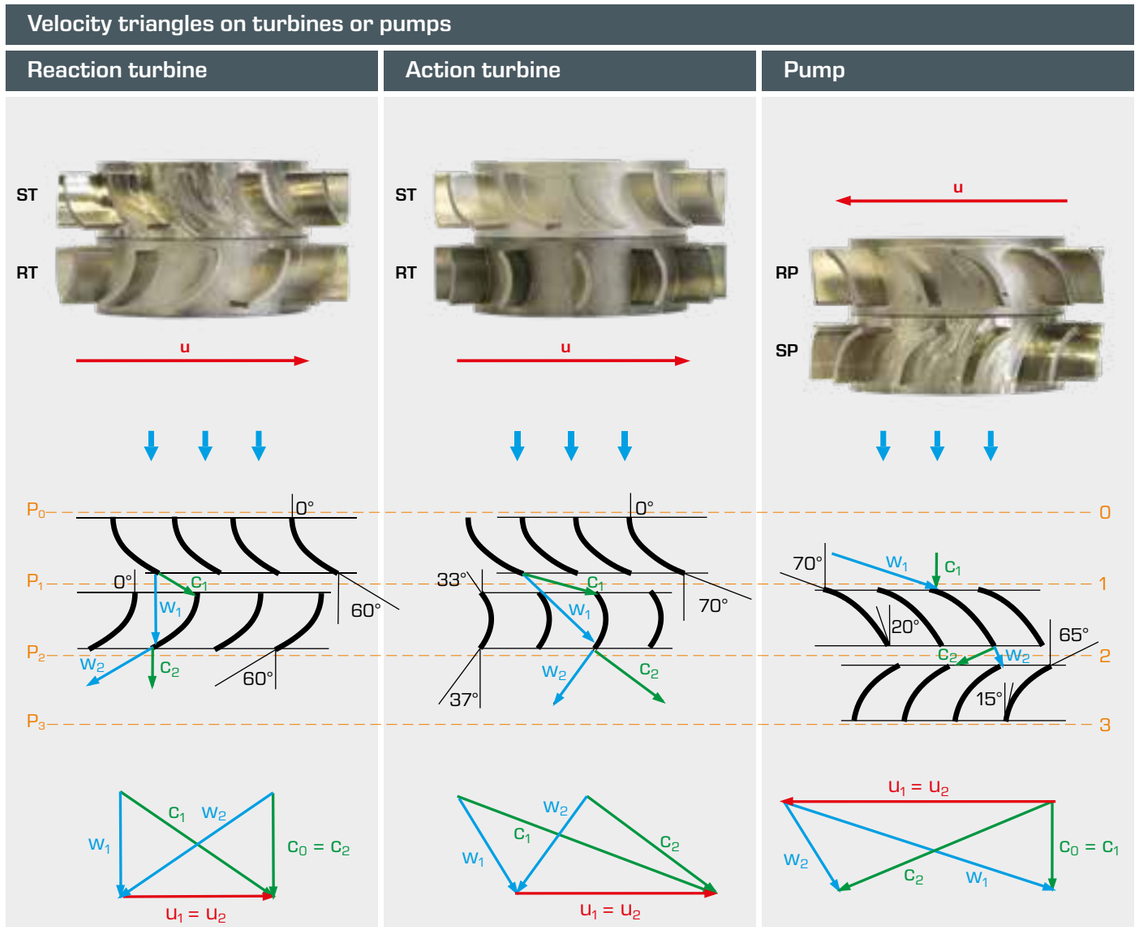

ST turbine stator, **SP** pump guide vane system, **RT** turbine rotor, **RP** pump impeller, **w** relative water velocity,
c absolute water velocity, **u** circumferential velocity, $P_0 ... P_3$ pressure measuring points

HM 405
Axial-flow turbomachines

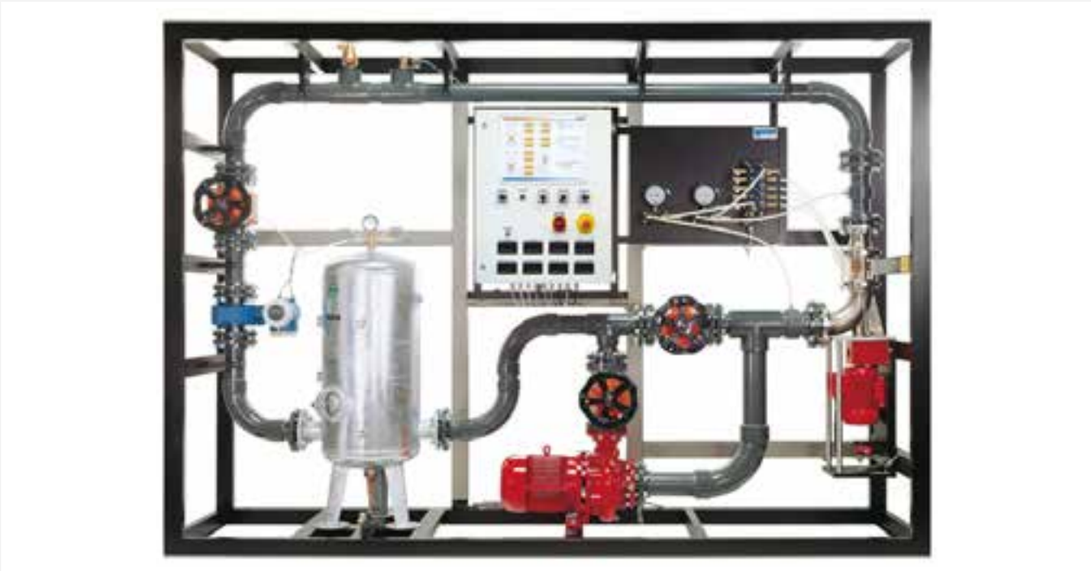

Description

- **investigation of a single-stage axial turbomachine**
- **can be operated as pump or turbine by changing rotor, impeller and stator, guide vane system**
- **probe to determine flow conditions at inlet and outlet of rotor, impeller and stator, guide vane system**
- **transparent working area**

The core piece of the experimental plant is the axial turbomachine with attached asynchronous motor. It can be operated either as a pump or turbine. To this end, different rotors, impellers and stators, guide vane systems are used. Included in the scope of delivery are four rotors, impellers and four stators, guide vane systems supplied with different blade, vane angles. The experimental plant contains a closed water circuit with expansion tank and centrifugal pump. The compressed-air powered expansion tank allows the turbomachine to be converted without loss of water.

The asynchronous motor functions during turbine operation as a generator, and during pump operation as a drive. A powerful pump generates flow and pressure during turbine operation. The power that is generated by the turbine is fed into this pump.

The transparent housing allows a full view of the rotor, impeller and stator, guide vane system and flow processes. The 3-hole probe can be used to measure the direction and velocity in the flow field directly upstream of, between, and downstream of rotor, impeller and stator, guide vane system. These values are used to record the velocity triangles for the blade, vane shapes.

Operation under different pressure levels is possible in order to study cavitation.

The speed is detected contact-free by means of an inductive displacement sensor on the motor shaft. To determine the drive power, the asynchronous motor is mounted on swivel bearings and equipped with a force sensor to measure the drive torque. Manometers measure the pressures at inlet and outlet. Pressure sensors measure the differential pressures at rotor, impeller and stator, guide vane system. The flow rate is measured by an electromagnetic flow meter. The measured values are read from digital displays.

Learning objectives/experiments

- recording characteristic curves
- determining dimensionless characteristics
- velocity triangles and pressure curves
- investigation of energy conversion within the turbomachine
- how blade, vane shape affects power and efficiency
- determining the outlet angular momentum and its effect on the power
- cavitation effects

HM 405
Axial-flow turbomachines

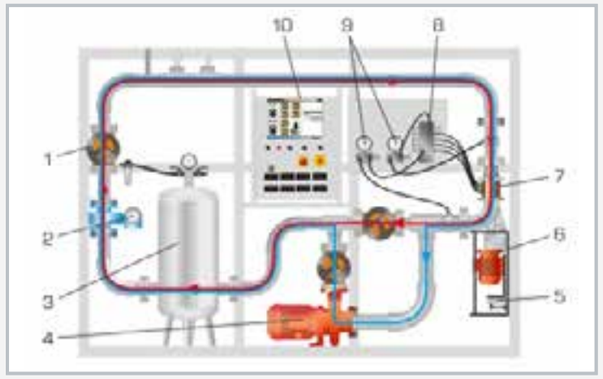

1 valve for adjusting the flow, 2 flow meter, 3 expansion tank with air cushion, 4 centrifugal pump for turbine mode, 5 force sensor for measuring the torque, 6 asynchronous motor, 7 axial-flow turbomachine, 8 differential pressure sensor, 9 manometer, 10 switch cabinet; red: pump mode, blue: turbine mode

The illustration shows cavitation effects in the working area of the axial flow turbomachine

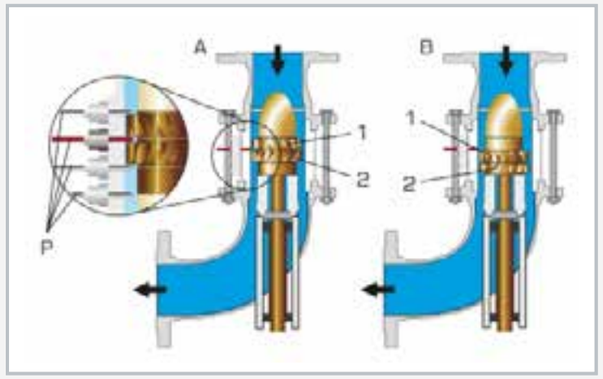

A: axial flow turbomachine as a turbine, 1 stator, 2 rotor;
B: axial flow turbomachine as a pump, 1 impeller, 2 guide vane system;
P pressure sensor

Specification

[1] investigation of an axial flow turbomachine
[2] closed water circuit with expansion tank and centrifugal pump
[3] turbomachine may be operated as a turbine and as a pump
[4] two sets of impellers and guide vane systems for pump mode and two sets of rotors and stators for turbine mode with different inlet and outlet angles
[5] asynchronous motor with 4-quadrant operation via frequency converter
[6] recovery of the brake energy
[7] motor with pendulum bearing, torque measurement via lever arm and force sensor
[8] inductive speed sensor on the motor
[9] manometers for measuring the inlet and outlet pressures
[10] measuring probe and differential pressure sensor for recording the pressure curve in the turbomachine
[11] electromagnetic flow meter
[12] display of power consumption, torque, speed, pressure, differential pressure and flow rate

Technical data

Centrifugal pump
- power: 5,5kW
- max. flow rate: 150m^3/h
- max. head: 10m

Asynchronous motor
- power: 1,5kW
- torque: 0...5Nm
- speed: 0...3000min^{-1}

Expansion tank: 150L

Measuring ranges
- pressure (manometer): 2x -1...5bar
- differential pressure: 5x 0...500mbar
- flow rate: 0...100m^3/h
- speed: 0...3000min^{-1}
- torque: 0...9,81Nm

400V, 50Hz, 3 phases
LxWxH: 3300x750x2300mm
Weight: approx. 620kg

Required for operation

compressed air connection: 3...10bar

Scope of delivery

1 experimental plant
4 rotors
4 distributors / guide vanes
1 set of accessories
1 set of instructional material

Basic knowledge

Internal combustion engines

Internal combustion engines are thermal fluid energy machines: they generate mechanical energy by burning a mixture of fuel and air. All work processes take place inside a working area: the cylinder. Since the force / energy within the cylinder is transferred by means of a variable volume, internal combustion engines are part of the group of positive displacement machines.

Motors or engines are often used to power motor vehicles, ships or locomotives. They are also used for drives that must be reliable and independent of the electrical power supply, such as emergency backup generators, construction machines or agricultural machinery.

Small single-cylinder engines are perfect for demonstrating the fundamentals of engine technology. GUNT offers various internal combustion engines with capacities of up to 75 kW, including real car engines with a volumetric displacement of up to two litres. Among these engines are four-stroke diesel and petrol engines, petrol engines with variable compression and two-stroke petrol engines.

Comparison of engines: 2-stroke petrol engine, 4-stroke petrol engine, 4-stroke diesel engine

	2-stroke petrol engine	4-stroke petrol engine	4-stroke diesel engine
Load	air / fuel mixture	air / fuel mixture	pure air
Fuel supply	carburettor	carburettor	injector nozzle
Ignition	ignition spark	ignition spark	compression
Compression ratio	5...8	5...12	14...21
Fuel-air ratio	0,8...1,2	0,8...1,2	1,5...10
Fuel	petrol	petrol	diesel

2-stroke engine: one work cycle = one crank revolution

1st stroke: compression/intake

The piston moves upward: from bottom dead centre to top dead centre

Processes above the piston:
The precompressed mixture is further compressed above the piston. The compressed mixture is ignited shortly before the top dead centre is reached.

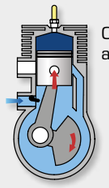
Compression and intake

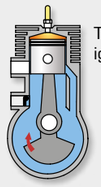
Top dead centre: ignition

Processes below the piston:
The transfer port is closed as the piston travels upwards. Due to the resulting negative pressure the inlet valve opens: The fuel and air mixture is drawn in.

2nd stroke: power / precompression

Downward motion of the piston: from top dead centre to bottom dead centre

Processes above the piston: The resulting pressure forces the piston downward and opens first the outlet channel and then the transfer port. The precompressed mixture under the piston pushes the accumulated exhaust fumes out and fills the cylinder.

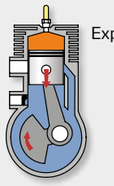
Expansion

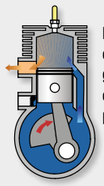
Bottom dead centre gas exchange: exhaust and purging

Processes below the piston:
The mixture that was sucked in is precompressed by the upward motion of the piston and pressed into the transfer port. The positive pressure closes the inlet valve.

Indicator diagram of a 2-stroke engine

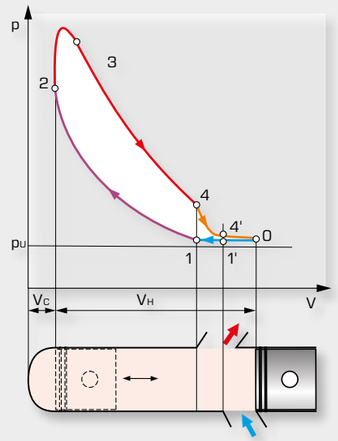

1st stroke (0 - 1): the cylinder is charged with the fuel / air mixture,
(1 - 2): compression of the mixture,
(2 - 3): ignition and combustion of the mixture,
2nd stroke (3 - 4): expansion of the combustion gases,
4 : exhaust opens, expansion is finished
4': transfer port opens, purging starts
1': purging is finished
1 : exhaust closes and compression starts

intake, compression, power, exhaust;
p_U ambient pressure, **V** volume,
V_H displaced volume, V_C compression volume

4-stroke engine: one work cycle = two crank revolutions

1st stroke: intake

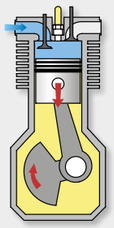

The piston moves from the top to the bottom dead centre. As it does, the fuel and air mixture is sucked in.

2nd stroke: compression

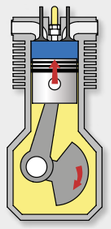

The piston moves from the bottom to the top dead centre. As it does, the fuel and air mixture is compressed.

3rd stroke: power – ignition and expansion

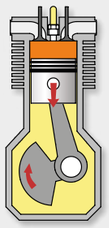

The compressed fuel and air mixture is ignited shortly before the top dead centre is reached. The resulting pressure presses the piston downwards.

4th stroke: exhaust

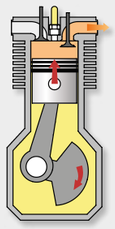

The piston moves from the bottom to the top dead centre. As it does, the exhaust gases are discharged.

Indicator diagram of a 4-stroke engine

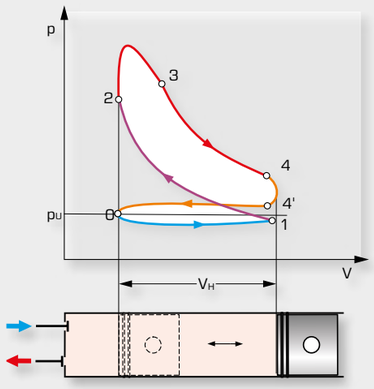

1st stroke (0 - 1): intake
- of the fuel and air mixture in a petrol engine,
- of pure air in a diesel engine

2nd stroke (1 - 2): compression
- of the fuel and air mixture in a petrol engine,
- of air to a least 700°C in a diesel engine

3rd stroke (2 - 3): ignition and combustion
- of the fuel and air mixture in a petrol engine (spark plugs),
- injection of diesel oil, ignition caused by high air temperature

(3 - 4): expansion of the combustion gases
4th stroke (4 - 4'): exhaust of the combustion gases
(4' - 0): expulsion of the remaining combustion gases

GUNT-FEMLine
Internal combustion engine training

Internal combustion engines are thermal driving machines. Internal combustion engines are used to power railway and motor vehicles, aircraft or watercraft and stationary machinery.

The GUNT-FEMLine offers four different internal combustion engines in a capacity range up to 2,2 kW: 4-stroke diesel and petrol engines with variable compression, and a 2-stroke petrol engine. The engines are supplied with fuel and air via a modular test stand, CT 159. The exhaust fumes are discharged to the outside via hoses. The engines are connected to the HM 365 Universal Drive and Brake Unit with a V-belt. HM 365 is first used to start the engines. While the engines are running, HM 365 is operated in generator mode, thus braking the engines.

The engines can be examined under full load or under partial load conditions. The characteristic diagram is determined with variable load and speed. The interaction of the brake and engine can also be examined in this context.

The **electronic indicating system** is a good way to gain an in-depth understanding of how an engine works. Special pressure sensors record the pressure in the cylinder chamber. These data provide important information on the combustion process in the engine. In industrial applications, indicating systems are used to optimise the combustion process. The data are used to create the indicator diagram.

The indicating system helps identify the individual strokes of the engine. The process of ignition or an ignition attempt, and the gas exchange can be examined. Cranking without ignition can be simulated while examining the processes inside the cylinder chamber. The idling behaviour of diesel and petrol engines can be compared. The indicating system can be used to carry out a thermodynamic analysis of the engine.

Modern GUNT software for Windows with comprehensive visualisation functions:

- process schematic for all engines with real-time display of all measured and calculated variables
- display of up to four characteristics at the same time
- representation of characteristics: select any assignment for the axes of the diagram
- storage of measuring data
- selection between four preset languages
- easy connection to a PC via USB

HM 365 + CT 159 + test engine (CT 150 – CT 153)
including PC data recording

- characteristics for full and partial load
- determination of friction loss in the engine
- comparison of diesel and petrol engines
- comparison of 2-stroke and 4-stroke engines
- 4-stroke petrol engine with variable compression

Extended range of experiments with

- exhaust gas analysis with CT 159.02

and / or

- electronic indication with PC-based data acquisition with CT 159.01 + engine-specific pressure sensor with TDC sensor (CT 159.03, CT 159.04 or CT 159.05)
- p-V diagram
- p-t diagram
- pressure curve during gas exchange
- determination of the indicated performance
- determination of mechanical efficiency

CT 150 Four-stroke petrol engine

Air-cooled, single-cylinder, 4-stroke petrol engine with external carburation

CT 159.03
Pressure sensor and TDC sensor

CT 151 Four-stroke diesel engine

Air-cooled, single-cylinder, 4-stroke diesel engine with direct injection

CT 159.04
Pressure sensor and TDC sensor

CT 152 Four-stroke petrol engine with variable compression

Air-cooled, single-cylinder, 4-stroke petrol engine:

- variable compression ratios that can be set by changing the combustion chamber geometry
- adjustable ignition point and variable carburettor jet

CT 159.03
Pressure sensor and TDC sensor

CT 153 Two-stroke petrol engine

Air-cooled, single-cylinder, 2-stroke petrol engine with diaphragm carburettor

CT 159.05
Pressure sensor and TDC sensor

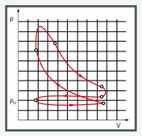

CT 159.01 Electronic engine indicating system

Pressure measurement in the cylinder chamber of an internal combustion engine

CT 159.02 Exhaust gas analysing unit

Measurement of the composition of exhaust gases (CO, CO_2, HC, O_2), the fuel / air ratio λ and the oil temperature of the engine.

CT 159
Modular test stand for single-cylinder engines, 2,2kW

Learning objectives/experiments

- in conjunction with the HM 365 load unit and one of the engines (CT 150 – CT 153)
  - plotting of torque and power curves
  - determination of specific fuel consumption
  - determination of volumetric efficiency and lambda (fuel-air ratio)
  - determination of the frictional power of the engine (in passive mode)

Description

- **setup of a complete test stand in conjunction with the universal drive and brake unit HM 365 and an engine**
- **test stand for single-cylinder internal combustion engines up to 2,2kW**
- **HM 365 drive and brake unit used as belt-driven starter-generator**
- **part of the GUNT-FEMLine**

This test stand measures the power output of internal combustion engines delivering up to 2,2kW. The complete test stand consists of three main elements: The CT 159 for mounting of the engine and as a control unit, the universal drive and brake unit HM 365 as a load unit and a choice of engine: four-stroke diesel engine (CT 151), two-stroke petrol engine (CT 153) and two four-stroke petrol engines (CT 150 or CT 152 with variable compression).

The main function of CT 159 is to mount the engine, supply it with fuel and air and record and display relevant measurement data. The engine is mounted on a vibration-insulated base plate and connected by way of a belt drive to HM 365.

HM 365 is initially used to start the engine. As soon as the engine is running, HM 365 acts as a brake for applying a load to the engine.

The lower section of the mobile frame contains fuel tanks and a stabilisation tank for the intake air.

The vibration-dampened switch cabinet contains digital displays for temperatures (one display each for exhaust gas, fuel and intake air) and air consumption. The speed and torque are adjusted and displayed on the HM 365.

The measured values are transmitted directly to a PC via USB. The data acquisition software is included.

CT 159
Modular test stand for single-cylinder engines, 2,2kW

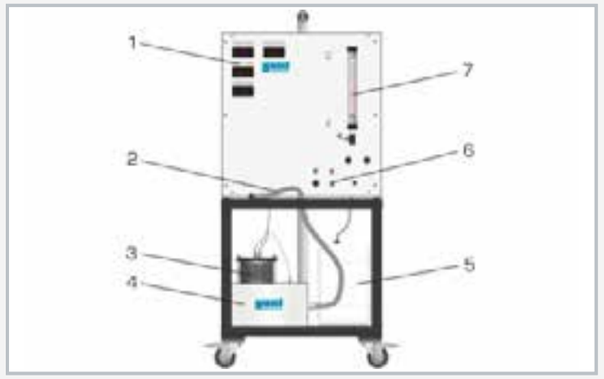

1 displays, 2 air hose, 3 air filter, 4 stabilisation tank, 5 fuel tank with pump, 6 connections and controls, 7 measuring tube for fuel consumption

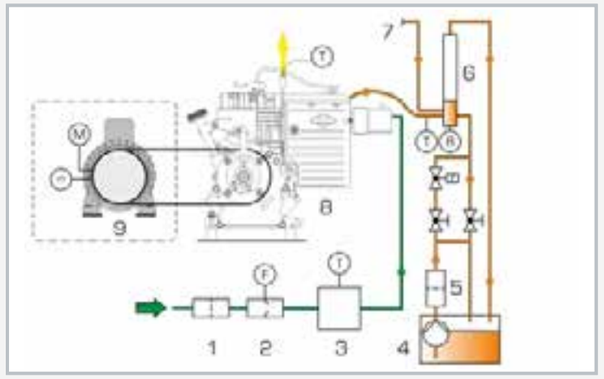

1 air filter, 2 orifice plate, 3 stabilisation tank, 4 fuel tank with pump, 5 fuel filter, 6 measuring tube for fuel consumption, 7 diesel return, 8 motor (CT 150-CT 153), 9 HM 365; B fuel consumption, T temperature, F volumetric flow rate, n speed, M torque, orange: fuel, green: intake air, yellow: exhaust gas

Complete experimental setup with HM 365, CT 159 and CT 151

Specification

[1] test stand for mounting of prepared single-cylinder engines (two-stroke and four-stroke) with a maximum power output of 2,2kW
[2] engine started by HM 365
[3] HM 365 acting as a brake generates the engine load
[4] force transmission from engine to load unit via V-belt drive
[5] continuous adjustment of speed and torque using HM 365
[6] vibration-dampened switch cabinet for display and control
[7] measuring tube with scale and pressure sensor for manual and electronic fuel consumption measurement
[8] measurement and display of air consumption, ambient temperature and fuel temperature
[9] measured value displays for engine exhaust gas temperature
[10] stabilisation tank for intake air
[11] 3 supply tanks for different fuels
[12] GUNT software for data acquisition via USB under Windows 7, 8.1, 10

Technical data

3 fuel tanks: 5L each

Measuring ranges
- temperature:
  - 0...100°C (ambient)
  - 0...100°C (fuel)
  - 0...1000°C (exhaust gas)
- air consumption: 30...333L/min
- fuel consumption: 0...50cm^3/min

230V, 50Hz, 1 phase
230V, 60Hz, 1 phase; 120V, 60Hz, 1 phase
UL/CSA optional
LxWxH: 900x900x1900mm
Weight: approx. 135kg

Required for operation

exhaust gas routing, ventilation
PC with Windows recommended

Scope of delivery

1 test stand (devoid of engine and load unit)
1 set of tools
1 set of accessories
1 GUNT software CD + USB cable
1 set of instructional material

CT 159.01
Electronic engine indicating system for CT 159

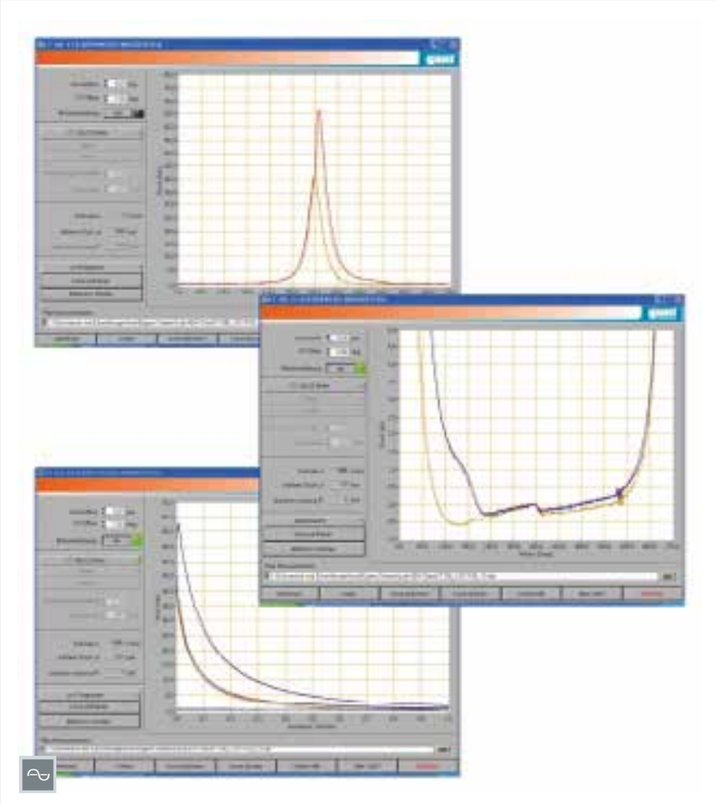

Learning objectives/experiments

- familiarisation with and use of an electronic cylinder pressure indication system
- p-t diagram (top screenshot)
- p-V diagram (bottom screenshot)
- pressure curve for gas cycle (right screenshot)
- determination of indicated power output from p-V diagram

Specification

[1] cylinder pressure indication system for internal combustion engine
[2] only to be used in conjunction with CT 159.03, CT 159.04 or CT 159.05 transducers
[3] chronological representation of pressure curve against the crank angle in p-t diagram to determine the maximum pressure and to monitor the ignition point and the pressure increase
[4] representation of pressure curve against the standardised piston capacity in p-V diagram to determine the indicated power output
[5] system consists of measuring amplifier and software
[6] GUNT software for data acquisition via USB under Windows 7, 8.1, 10

Technical data

Measuring amplifier
- amplification factor: 10mbar/mV

TDC sensor trigger distance
- 1mm

230V, 50Hz, 1 phase
230V, 60Hz, 1 phase
120V, 60Hz, 1 phase
UL/CSA optional
LxWxH: 280x260x120mm (measuring amplifier)
Weight: approx. 5kg

Required for operation

PC with Windows

Scope of delivery

1 measuring amplifier
1 set of accessories
1 GUNT software CD + USB cable

Description

- **cylinder pressure indication system, suitable for CT 150 – CT 153 engines**

Indicating systems can be used for a thermodynamic analysis of engines. In industrial applications, these systems are used to optimise the combustion process.

The system is used in conjunction with the transducer sets CT 159.03, CT 159.04 and the CT 159.05. Each of the sets consists of a pressure transducer and a TDC sensor. It allows pressure measurements to be carried out in the cylinder head of an internal combustion engine and is designed for the CT 150, CT 151, CT 152 and CT 153 engines. The data is transferred to a PC for further processing. The software produces p-t and p-V diagrams, and also displays the average pressure and the indicated power output.

The system consists of software and a measuring amplifier for the pressure transducer and TDC sensor.

CT 159.02
Exhaust gas analysing unit

Learning objectives/experiments

- measurement of residual oxygen content in exhaust gas
- measurement of carbon monoxide and carbon dioxide
- measurement of hydrocarbons
- determination of lambda (fuel-air ratio)
- measurement of oil temperature

Specification

[1] exhaust gas analysis unit for engines
[2] menu-based display for calibration, operation and displaying measured values
[3] temperature sensor for measurement of engine oil temperature
[4] USB interface

Technical data

Working temperature: 5...45°C

Measuring ranges
- CO: 0...10% vol.
- CO_2: 0...20% vol.
- O_2: 0...22% vol.
- HC: 0...2500ppm vol.
- lambda: 0...9,999
- oil temperature: 0...130°C
- accuracy classes 1 and 0

230V, 50Hz, 1 phase
230V, 60Hz, 1 phase
120V, 60Hz, 1 phase
LxWxH: 330x260x205mm
Weight: approx. 7kg

Scope of delivery

1 exhaust gas analysing unit
1 probe
1 manual

Description

- **measurement of relevant exhaust gas parameters on internal combustion engines**

The CT 159.02 is an accessory for the CT 159, CT 110, CT 300 and CT 400 engine test stands and the associated engines. The unit can be used to measure the exhaust gas composition (CO, CO, HC, O), the excess air factor lambda and the oil temperature in the engine. The menu-based display on the unit is used for calibration, operation and to display the measured data. Interfaces allow it to be connected to a PC or external printer.

The measuring accuracy complies with OIML Class 1 (Organisation Internationale de Métrologie Légale) and meets the requirements of the Physikalisch-Technische Bundesanstalt (German national metrology institute; PTB).

CT 150
Four-stroke petrol engine for CT 159

Learning objectives/experiments

- in conjunction with CT 159 test stand + HM 365 load unit
  - familiarisation with a four-stroke petrol engine
  - plotting of torque and power curves
  - determination of specific fuel consumption
  - determination of volumetric efficiency and lambda (fuel-air ratio)
  - determination of the frictional power of the engine

Specification

[1] air-cooled single-cylinder four-stroke petrol engine for installation in the CT 159 test stand
[2] engine mounted on vibration-insulated base plate
[3] force transmission to brake via pulley
[4] engine complete with fuel hose and exhaust gas temperature sensor
[5] fuel hose with self-sealing quick-release coupling

Technical data

Air-cooled single-cylinder petrol engine
- power output: 2,2kW at 3200min^{-1}
- bore: 62mm
- stroke: 42mm

Belt pulley: Ø 125mm

LxWxH: 450x360x380mm
Weight: approx. 22kg

Scope of delivery

1 engine, complete with all connections and supply lines
1 manual

Description

- **engine for installation in the CT 159 test stand**
- **part of the GUNT-FEMLine**

In conjunction with the CT 159 test stand and the HM 365 load unit, the simple four-stroke petrol engine is highly suitable for use in teaching the fundamentals of engine functioning and measurement.

The engine used here is an air-cooled single-cylinder four-stroke petrol engine with external carburation. The engine is started by an electric motor mounted in the HM 365 unit. The air cooling is effected by a flywheel fan. The HM 365 load unit is coupled by way of a pulley on the drive shaft.

The engine includes a sensor to measure the exhaust gas temperature. The sensor, ignition cut-off as well as air and fuel supply are connected to the CT 159 test stand.

The full load and partial load characteristic curves of the engine are plotted in experiments.

CT 151
Four-stroke diesel engine for CT 159

Learning objectives/experiments

- in conjunction with CT 159 test stand and HM 365 load unit
  - familiarisation with a four-stroke diesel engine
  - plotting of torque and power curves
  - determination of specific fuel consumption
  - determination of volumetric efficiency and lambda (fuel-air ratio)
  - determination of the frictional power of the engine

Specification

[1] air-cooled single-cylinder four-stroke diesel engine for installation in the CT 159 test stand
[2] engine mounted on vibration-insulated base plate
[3] force transmission to brake via pulley
[4] engine complete with fuel hose and exhaust gas temperature sensor
[5] fuel hose with self-sealing quick-release coupling

Technical data

Air-cooled single-cylinder diesel engine
- power output: 1.5kW at 3000min^{-1}
- bore: 69mm
- stroke: 62mm

V-belt: Ø 125mm

LxWxH: 430x350x350mm
Weight: approx. 38kg

Scope of delivery

1 engine, complete with all connections and supply lines
1 manual

Description

- **engine for installation in the CT 159 test stand**
- **part of the GUNT-FEMLine**

In conjunction with the CT 159 test stand and the HM 365 load unit, the air-cooled four-stroke diesel engine is highly suitable for use in teaching the fundamentals of engine functioning and measurement.

The engine used here is an air-cooled single-cylinder four-stroke diesel engine with direct injection. The engine is started by an electric motor mounted in the HM 365 unit. The air cooling is effected by a flywheel fan. The HM 365 load unit is coupled by way of a pulley on the drive shaft. The engine includes a sensor to measure the exhaust gas temperature. The sensor, ignition cut-off as well as air and fuel supply are connected to the CT 159 test stand.

The full load and partial load characteristic curves of the engine are plotted in experiments.

CT 152
Four-stroke petrol engine with variable compression for CT 159

Learning objectives/experiments

- in conjunction with CT 159 test stand + HM 365 load unit, in addition to the standard basic experiments
  - influence of compression ratio, mixture composition, ignition timing on engine characteristics and exhaust gas temperature

Specification

[1] air-cooled single-cylinder four-stroke petrol engine for installation in the CT 159 test stand
[2] 5 variable compression ratios, adjustable by varying the combustion chamber geometry
[3] adjustable ignition point
[4] mixture composition adjustable
[5] engine mounted on vibration-insulated base plate
[6] force transmission to brake via pulley
[7] engine complete with fuel hose and exhaust gas temperature sensor
[8] fuel hose with self-sealing quick-release coupling

Technical data

Air-cooled single-cylinder petrol engine
- power output: 1,2kW at 2500min^{-1}
- bore: 65,1mm
- stroke: 44,4mm
- compression ratios: 1:10; 1:8,5; 1:7 (original compression ratio), 1:5,5; 1:4
- ignition timing adjustable in 11 stages: 10° after TDC to 40° before TDC

Belt pulley: Ø 125mm

LxWxH: 350x420x500mm
Weight: approx. 21kg

Scope of delivery

1 engine, complete with all connections and supply lines
5 combustion chamber inserts
1 pin type face wrench
1 manual

Description

- **engine for installation in the CT 159 test stand**
- **part of the GUNT-FEMLine**

In conjunction with the CT 159 test stand and the HM 365 load unit, the engine is highly suitable for investigation of different compression ratios, ignition timing adjustment and an adjustable jet nozzle.

The engine used here is an air-cooled single-cylinder four-stroke petrol engine with external carburation. A modified cylinder head permits experiments with various combustion chamber inserts and compression ratios. To adjust the mixture composition, the carburettor was modified. CT 152 is fitted with a manual adjustment to adjust the ignition timing – from advanced to retarded.

The engine includes a sensor to measure the exhaust gas temperature. The sensor, ignition cut-off as well as air and fuel supply are connected to the CT 159 test stand.

The full load and partial load characteristic curves of the engine are plotted in experiments.

CT 153
Two-stroke petrol engine for CT 159

Learning objectives/experiments

- in conjunction with CT 159 test stand and HM 365 load unit
  - familiarisation with a four-stroke petrol engine
  - plotting of torque and power curves
  - determination of specific fuel consumption
  - determination of volumetric efficiency and lambda (fuel-air ratio)

Specification

[1] air-cooled single-cylinder two-stroke petrol engine for installation in CT 159 test stand
[2] engine mounted on a base plate with vibration dampers
[3] force transmission to brake via pulley, gear transmission 2:1
[4] engine completely equipped with fuel line, throttle cable and exhaust gas temperature sensor
[5] fuel hose with self-sealing quick-release coupling

Technical data

Air-cooled single-cylinder petrol engine
- power output: 1,32kW at 6500min^{-1}
- displacement: 45cm^3
- bore: 42,5mm
- stroke: 32mm

V-belt: diameter=63mm

LxWxH: 430x355x310mm
Weight: approx. 8kg

Scope of delivery

1 engine, complete with all connections and supply lines
1 manual

Description

- **engine for installation in the CT 159 test stand**
- **part of the GUNT-FEMLine**

In conjunction with the CT 159 test stand and the HM 365 load unit, the two-stroke petrol engine is highly suitable for use in teaching the fundamentals of engine functioning and measurement.

The engine used here is an air-cooled single-cylinder two-stroke petrol engine with a membrane carburettor. The engine is started by an electric motor mounted in the HM 365 unit. The air cooling is effected by a flywheel fan. The engine output is dissipated via a centrifugal clutch. The HM 365 load unit is coupled by way of a covered V-belt drive. Because of the high speed this engine is provided with a smaller pulley than other engines in the series.

The engine includes a sensor to measure the exhaust gas temperature. The sensor, ignition cut-off as well as air and fuel supply are connected to the CT 159 test stand.

The full load and partial load characteristic curves of the engine are plotted in experiments.

3

Driven machines

Introduction

Overview Driven machines 180

Centrifugal pumps

Basic knowledge Centrifugal pumps 182
HM 150.04 Centrifugal pump 184
HM 150.16 Series and parallel configuration of pumps 186
HM 450C Characteristic variables of hydraulic turbomachines 188
HM 283 Experiments with a centrifugal pump 190
HM 284 Series and parallel configuration of pumps 192
HM 300 Hydraulic circuit with centrifugal pump 194
HM 305 Centrifugal pump trainer 196
HM 332 Pump characteristics for parallel and series configuration 198
Overview HM 362 Comparison of pumps 200
HM 362 Comparison of pumps 202
Overview GUNT-FEMLine Water pump training part 1 roto dynamic pumps 204
HM 365 Universal drive and brake unit 206
HM 365.10 Supply unit for water pumps 208
HM 365.11 Centrifugal pump, standard design 210
HM 365.12 Centrifugal pump, self-priming 211
HM 365.13 Centrifugal pump, multistage 212
HM 365.14 Centrifugal pumps, series and parallel connected 213
HM 365.15 Side channel pump 214

Axial-flow pumps

HM 365.45 Axial-flow pump 216
HM 405 Axial-flow turbomachines 218

Positive displacement pumps

Basic knowledge Positive displacement pumps 220
HM 285 Experiments with a piston pump 222
HM 286 Experiments with a gear pump 224
Overview GUNT-FEMLine Water pump training part 2 positive displacement pumps 226
HM 365.16 Lobe pump 228
HM 365.17 Reciprocating piston pump 229
HM 365.18 Gear pump 230
HM 365.19 Vane pump 231
Overview GUNT-FEMLine Oil pump training 232
HM 365.20 Oil pump supply unit 234
HM 365.21 Screw pump 236
HM 365.22 External gear pump 237
HM 365.23 Vane pump 238
HM 365.24 Internal gear pump 239

Fans and compressors

Basic knowledge Fans 240
HM 282 Experiments with an axial fan 242
Overview HM 215 Two-stage axial fan 244
HM 215 Two-stage axial fan 246
HM 210 Characteristic variables of a radial fan 248
HM 280 Experiments with a radial fan 250
HM 292 Experiments with a radial compressor 252
Overview ET 513 Single-stage piston compressor with drive unit HM 365 254
ET 513 Single-stage piston compressor 256
Overview HM 299 Comparison of positive displacement machines and turbomachines 258
HM 299 Comparison of positive displacement machines and turbomachines 260

Driven machines

Whenever a machine adds energy to a fluid, it is called a driven machine. In order to operate, driven machines require mechanical energy or work **W**. We distinguish between different types of driven machines, depending on the working medium:

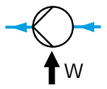

Pumps
(incompressible fluid)

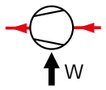

Fan or compressor
(compressible fluid)

Moreover, driven machines are distinguished depending on their mode of operation, the direction of flow of the fluid, or their design. Like the driving machines in chapter 2, driven machines are categorised into turbomachines and positive displacement machines.

Driven machines
Energy is added to the fluid

Turbomachines
Transfer of energy between the fluid and the machine by means of flow forces

- rotodynamic pumps
- fans and compressors

Positive displacement machines
Transfer of energy between the fluid and the machine by means of a variable volume, generated by a displacement device

- positive displacement pumps
- piston compressors

Real industrial applications...

A centrifugal pump at a power plant

Positive displacement pump

...and the corresponding GUNT device

HM 150.16 Series and parallel configuration of pumps (easy-to-handle experimental unit)

HM 362 Comparison of pumps (complex trainer)

HM 365.21 Screw pump

The table below is an excerpt from a typical curriculum on fluid machinery at a technical university. As with the categorisation of fluid energy machines, the curriculum can be adjusted depending on focus. The GUNT devices cover almost every aspect of the curriculum.

Driven machines	GUNT products
Pumps	
Centrifugal pumps	HM 150.04, HM 150.16, HM 283, HM 284, HM 299, HM 300, HM 305, HM 332, HM 362, HM 365.11, HM 365.12, HM 365.13, HM 365.14, HM 365.15, HM 450 C
Positive displacement pumps	HM 285, HM 286, HM 362, HM 365.16, HM 365.17, HM 365.18, HM 365.19, HM 365.20, HM 365.21, HM 365.22, HM 365.23, HM 365.24
Special types of positive displacement pump	HM 365.21 – HM 365.24
Rotary piston pumps	HM 286, HM 365.16, HM 365.18, HM 365.22, HM 365.24
Water jet pumps	accessories in experimental units from catalogues 4 and 5
Compressors	
Piston compressors	ET 513, HM 299, further experimental units in catalogue 3
Rotary compressors	HM 299
Radial compressors	HM 292
Fans	
Axial fans	HM 215, HM 282
Radial fans	HM 210, HM 280

HM 292 Experiments with a radial compressor

Industrial radial compressor

Basic knowledge

Centrifugal pumps

Fundamental principles of centrifugal pumps

In centrifugal pumps the energy is transferred hydrodynamically. This is in contrast to the hydrostatic transfer of energy in positive displacement pumps. In the hydrodynamic transfer of energy the fluid is accelerated by the impeller of the centrifugal pump. Therefore, the impeller of the centrifugal pump has to move with high velocity and thus a high rotational speed. The work Y_i transferred to the fluid is calculated from the velocities at the impeller.

$$Y_i = (c_{2u} \cdot u_2 - c_{1u} \cdot u_1)$$

The specific work Y_i is independent of the fluid properties (density, viscosity). The flow rate **Q** and the density **ϱ** of the fluid together give the power P_i transferred from the impeller to the fluid.

$$P_i = \varrho \cdot Q (c_{2u} \cdot u_2 - c_{1u} \cdot u_1)$$

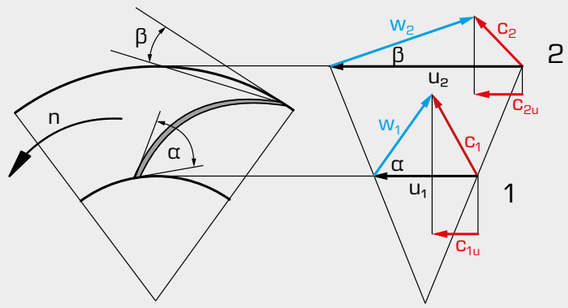

The velocities at the impeller inlet (1) and at the impeller outlet (2) can be clearly represented in velocity triangles.

1 entry of the flow, **2** outlet of the flow,
u peripheral speed, **w** relative speed of the fluid in the impeller,
c absolute velocity of the fluid,
c_{1u}/c_{2u} circumferential component of the absolute velocity,
a, b angle between the velocities, **Q** flow rate,
ϱ density, **n** rotational speed

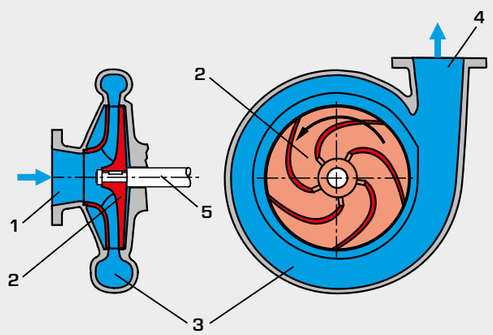

The main components of a centrifugal pump

1 inlet, **2** impeller, **3** spiral housing, **4** outlet , **5** impeller shaft

Advantages of centrifugal pumps

- simple design, few moving parts, long service life
- flow rate easily adjustable via valve at the outlet of the pump or via rotational speed
- high speed, direct drive via electric motor or turbine possible
- built-in pressure relief, no safety valve needed
- quiet running thanks to good mass balancing and lack of oscillating masses
- continuous, pulsation-free delivery
- solids may be carried along with the flow
- suitable for large powers
- high power concentration and smaller space

Disadvantages of centrifugal pumps

- not self-priming (special types such as side channel pumps may also be self-priming)
- risk of cavitation with warm water or low intake pressures
- flow rate is dependent on the delivery pressure
- several stages necessary at high delivery pressures

Design features of centrifugal pumps

- number of stages: single-stage, multi-stage
- open / closed impeller
- **1** single-suction / **2** double-suction impeller
- flow through the impeller
  3 radial, **4** diagonal, **5** axial

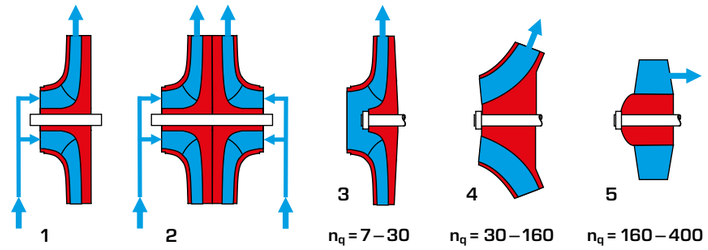

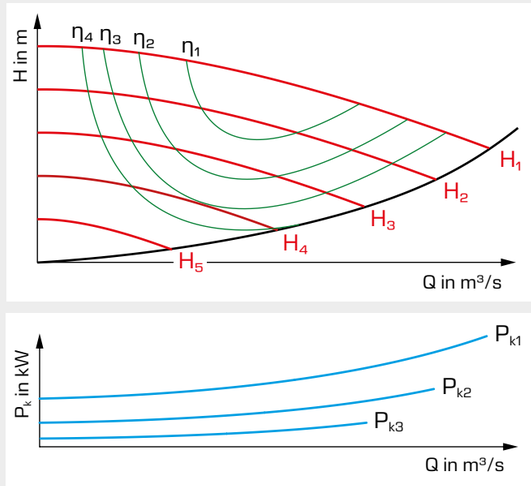

$H_1 \ldots H_5$ pump characteristics depending on the speed,
$\eta_1 \ldots \eta_5$ efficiency depending on the speed,
system characteristic;
$P_{k1} \ldots P_{k3}$ coupling power depending on the speed

Characteristic zone of centrifugal pumps

The characteristic values of a centrifugal pump are plotted in a characteristic zone over the flow rate **Q**. The main characteristic is the head **H** or the delivery pressure **p**.

The lines of equal efficiency **η** are also entered in the characteristic zone.

Another important representation is the plot of the coupling power P_K and the **NPSH** over the flow **Q**.

Important physical laws in centrifugal pumps:

- the flow rate **Q** is linearly dependent on the speed **n**. $Q = f(n)$
- the head **H** is dependent on the square of the speed **n**. $H = f(n^2)$
- the power P_K is dependent on the third power of the speed **n**. $P_K = f(n^3)$

$$n_q = n \cdot \frac{Q^{1/2}}{H^{3/4}}$$

The similarity of different pumps is described by the dimensionless characteristic of the specific speed n_q.

Operating behaviour and operating points of centrifugal pumps

At the operating point the delivery pressure generated by the pump is in equilibrium with the resistance of the pipe network at a certain flow rate. The operating point is where the pump characteristic intersects the resistance characteristic of the pipe network.

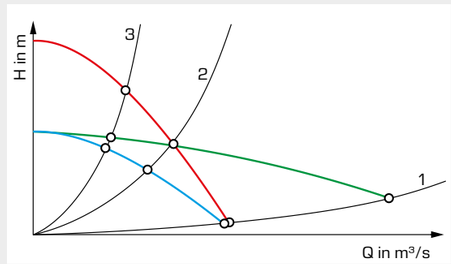

Pump characteristics

single pump,
two pumps connected in series,
two pumps connected in parallel;

Pipe network characteristics

1 system with low resistance,
2 system with medium resistance,
3 system with large resistance

HM 150.04
Centrifugal pump

The illustration shows HM 150.04 together with HM 150.

Description

- **characteristic curve of a centrifugal pump**
- **variable speed via frequency converter**

Centrifugal pumps are turbomachines that are used for conveying fluids. The HM 150.04 unit can be used to study a centrifugal pump and to record a typical pump characteristic curve.

The experimental unit includes a self-priming centrifugal pump, a ball valve on the outlet side and manometers on the inlet and outlet side. It is driven by an asynchronous motor. The speed is infinitely adjustable by using a frequency converter. A ball valve is used to adjust the head.

In experiments, the operating behaviour of the pump as a function of the flow rate is studied and displayed in characteristic curves. The motor's speed and electrical power are displayed digitally. Pressures on the inlet and outlet side are displayed on two manometers.

The experimental unit is positioned easily and securely on the work surface of the HM 150 base module. The pump draws in water from the tank on the base module HM 150. The flow rate is determined volumetrically by flowing back into the measuring tank on HM 150.

Learning objectives/experiments

- recording the pump characteristic curve at a constant pump speed
  - measuring the inlet and outlet pressure
  - determining the flow rate
- recording the pump characteristics for different speeds
- power and efficiency curves
  - measuring the electrical drive power
  - determining the hydraulic power
  - calculating the efficiency

HM 150.04
Centrifugal pump

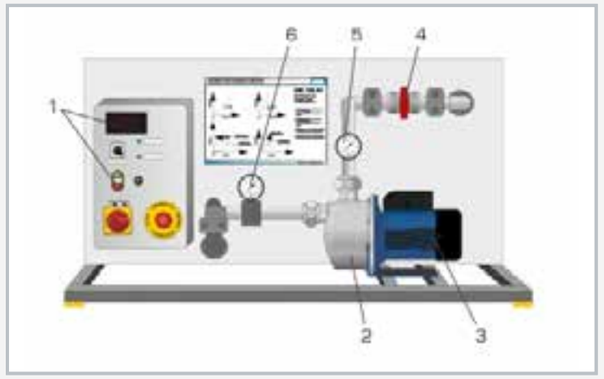

1 display and controls, 2 centrifugal pump, 3 motor, 4 ball valve for adjusting the head, 5 outlet side manometer, 6 inlet side manometer

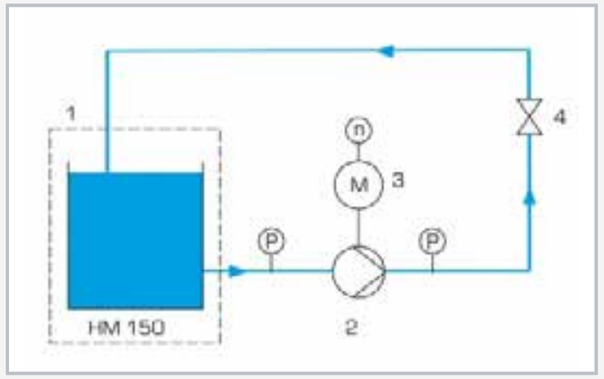

1 water supply via HM 150, 2 centrifugal pump, 3 motor, 4 ball valve for adjusting the head; P pressure, n speed

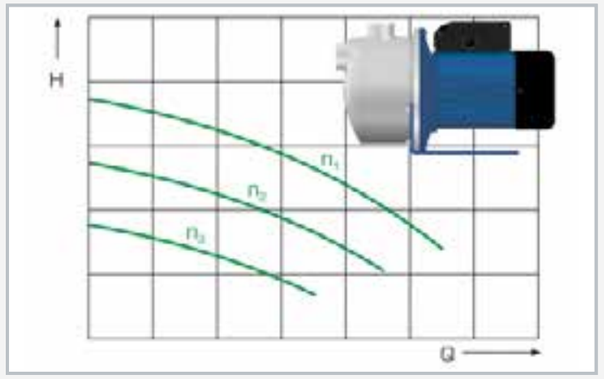

Pump characteristic curves at different speeds:
H head, Q flow rate, n speed

Specification

[1] investigation of a centrifugal pump
[2] drive with variable speed via frequency converter
[3] ball valve to adjust the head
[4] manometers on the inlet and outlet side of the pump
[5] digital display of speed and power
[6] flow rate determined by base module HM 150
[7] water supply using base module HM 150

Technical data

Centrifugal pump, self-priming
- max. flow rate: 3000L/h
- max. head: 36,9m

Asynchronous motor
- nominal power: 370W

Measuring ranges
- pressure (outlet side): -1...5bar
- pressure (inlet side): -1...1,5bar
- speed: 0...3000min^{-1}
- power: 0...1000W

Measuring ranges
- pressure (outlet): -1...5bar
- pressure (inlet): -1...1,5bar
- speed: 0...3000min^{-1}
- power: 0...1000W

230V, 50Hz, 1 phase
230V, 60Hz, 1 phase; 120V, 60Hz, 1 phase
UL/CSA optional
LxWxH: 1100x640x600mm
Weight: approx. 46kg

Required for operation

HM 150 (closed water circuit)

Scope of delivery

1 experimental unit
1 set of instructional material

HM 150.16
Series and parallel configuration of pumps

Description

- **series and parallel configuration of pumps**
- **determining pump characteristic curves**

In complex systems, pumps can be connected in series or in parallel. In series operation the heads are added together and in parallel operation, the flow rates of the pumps are added. Series and parallel configuration of pumps behave similar to series and parallel configuration of electric resistances in electric circuits. The pump correlates with the electric resistance, the flow correlates with the electric current and the head with the voltage.

With HM 150.16 pumps are studied individually, in series and in parallel configuration.

The experimental unit contains two identical centrifugal pumps and an intake tank with overflow. The overflow ensures a constant suction head in the tank, regardless of the water supply. Ball valves in the pipes allow easy switching between series and parallel operation.

Pressures at inlet and outlet of the two pumps are displayed on manometers.

The experimental unit is positioned easily and securely on the work surface of the HM 150 base module. The water is supplied and the flow rate measured by HM 150. Alternatively, the experimental unit can be operated by the laboratory supply.

Learning objectives/experiments

- investigation of pumps in series and parallel configuration
  - determining the head
  - recording the pump characteristics
  - determining the hydraulic power
  - determining the operating point

HM 150.16
Series and parallel configuration of pumps

1 tank, 2 overflow, 3 water connection, 4 ball valve, 5 pump, 6 pump switch, 7 drain, 8 manometer

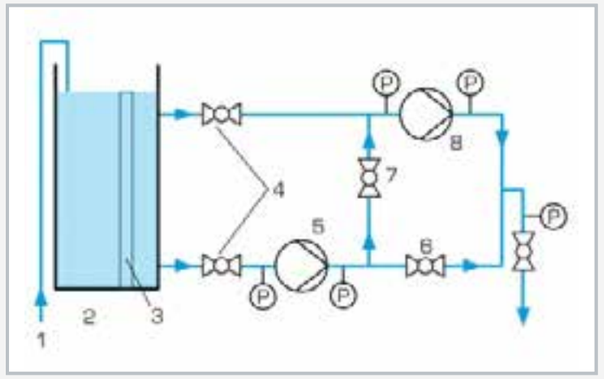

1 water connection, 2 tank, 3 overflow, 4 ball valve, 5 pump 1, 6 and 7 ball valves for switching the pumps between series and parallel operation, 8 pump 2; P pressure

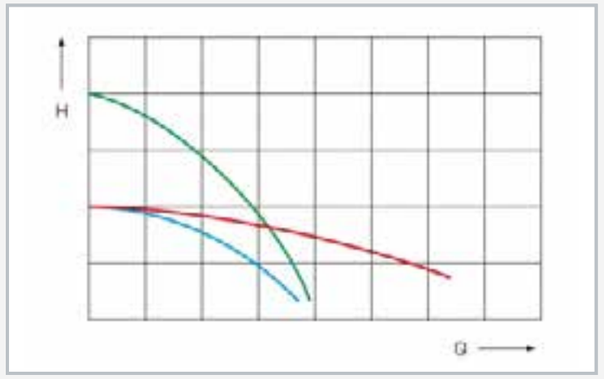

Characteristic curves: blue: one pump in operation, red: parallel configuration of pumps, green: series configuration of pumps; H head, Q flow rate

Specification

[1] investigation of series and parallel configuration of pumps
[2] two identical centrifugal pumps
[3] transparent tank as intake tank
[4] overflow in the tank ensures constant suction head
[5] ball valves used to switch between series and parallel operation
[6] manometers at inlet and outlet of each pump
[7] flow rate determined by base module HM 150
[8] water supply via HM 150 or via laboratory supply

Technical data

2x centrifugal pump
- power consumption: 370W
- max. flow rate: 21L/min
- max. head: 12m

Tank: 13L
Pipes and pipe connections: PVC

Measuring ranges
- pressure (inlet): 2x -1...1,5bar
- pressure (outlet): 3x 0...2,5bar

230V, 50Hz, 1 phase
230V, 60Hz, 1 phase; 120V, 60Hz, 1 phase
UL/CSA optional
LxWxH: 1110x650x500mm
Weight: approx. 62kg

Required for operation

HM 150 (closed water circuit) or water connection, drain

Scope of delivery

1 experimental unit
1 set of instructional material

HM 450C
Characteristic variables of hydraulic turbomachines

The illustration shows HM 450C together with the two turbines HM 450.01 (left) and HM 450.02 (right).

Description

- **characteristic variables of water turbines and centrifugal pumps**
- **pelton turbine HM 450.01 and Francis turbine HM 450.02 extend the scope of experiments**
- **pumped storage plant**

Turbomachines such as pumps and turbines are energy converters. Turbines convert flow energy into mechanical energy and pumps convert mechanical energy into flow energy.

HM 450C can be used to investigate a centrifugal pump. Experiments can be performed on two key water turbine designs: Pelton and Francis turbine, available as accessories HM 450.01 and HM 450.02.

The closed water circuit comprises a tank, a standard centrifugal pump with variable speed and a flow control valve to adjust the back pressure.

The speed is detected contact-free by means of an inductive displacement sensor on the motor shaft. To determine the drive power, the drive motor is mounted on swivel bearings and equipped with a force sensor to measure the drive torque. Pressures at the inlet and outlet of the pump are measured. The flow rate is measured by means of an electromagnetic flow meter. The measured values are displayed digitally and processed further on a PC. The PC is used to calculate the power output data of the examined turbomachine and to represent them in characteristics.

One of the turbines HM 450.01 or HM 450.02 can also be placed on top of the storage tank. The centrifugal pump supplies the turbine with water. The measured values of the turbine are transfered via cable to HM 450C. A special feature of HM 450C is the ability to operate pump and turbine at the same time. Relevant measured values are recorded contemporaneously at both turbomachines. Thus the trainer can be used as a pumped storage plant.

Learning objectives/experiments

- centrifugal pump
  - measuring inlet and outlet pressures of the pump
  - determining delivery height
  - determining hydraulic output
  - determining mechanical output
  - recording characteristics at various speeds
  - determining the efficiency
- with accessories Pelton turbine HM 450.01 or Francis turbine HM 450.02
  - measuring torque and speed
  - determining efficiency of the turbine
  - recording characteristics
  - demonstration of a pumped storage plant

HM 450C
Characteristic variables of hydraulic turbomachines

1 electromagnetic flow meter, 2 flow control valve, 3 storage tank, 4 ressure sensor at pump inlet, 5 centrifugal pump, 6 drive motor including measurement of torque, 7 pressure sensor at pump outlet, 8 switch cabinet with displays and controls

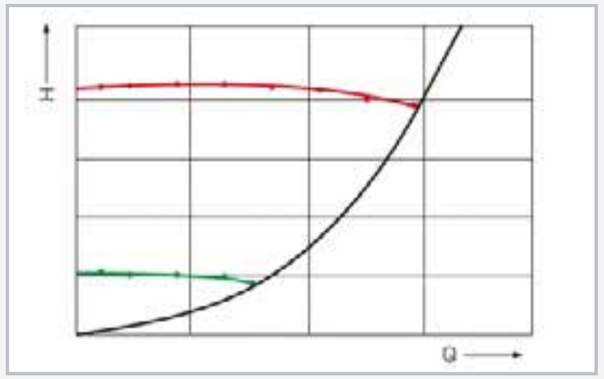

Pump characteristics: H head, Q flow rate; red: characteristics at n=2900min^{-1}, green: characteristics at n=1450min^{-1}, black: system characteristic

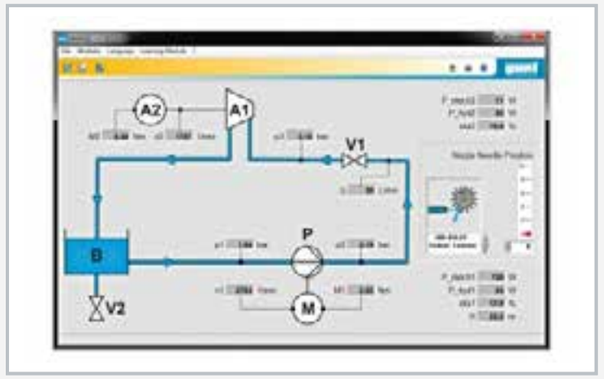

Software screenshot: Francis turbine process schematic

Specification

[1] determining characteristic variables of a centrifugal pump
[2] determining characteristic variables of water turbines together with the accessories HM 450.01 and HM 450.02
[3] experiments on a pump in a closed water circuit with storage tank and flow control valve to adjust the back pressure
[4] experiments on turbines: closed water circuit for supplying turbines
[5] pipes and fittings made of PVC
[6] 3-phase AC motor for pump with variable speed via frequency converter
[7] non-contact speed measurement at the turbine shaft and force sensor at the brake for measuring the torque
[8] digital displays for pressures, flow rate, speed and torque
[9] GUNT software for data acquisition via USB under Windows 7, 8.1, 10

Technical data

Standard centrifugal pump
- max. head: 23,9m
- max. flow rate: 31m^3/h

Drive motor with variable speed
- power output: 2,2kW
- speed range: 0...3000min^{-1}

Storage tank: 250L

Measuring ranges
- pressure: 2x 0...4bar abs.
- flow rate: 0...40m^3/h
- torque: 0...20Nm
- speed: 2x 0...4000min^{-1}

230V, 50Hz, 1 phase
230V, 60Hz, 1 phase
230V, 60Hz, 3 phases
UL/CSA optional
LxWxH: 1900x790x1900mm
Weight: approx. 243kg

Required for operation

PC with Windows recommended

Scope of delivery

1 trainer
1 GUNT software CD + USB cable
1 set of instructional material

HM 283
Experiments with a centrifugal pump

Description

- **determination of characteristic pump variables**
- **closed water circuit**
- **GUNT software for data acquisition, visualisation and operation**
- **part of the GUNT-Labline fluid energy machines**

Centrifugal pumps are turbomachines which are used to transport fluids. The rotation of the pump impeller generates centrifugal forces. These forces are used to deliver the water.

The experimental unit provides the basic experiments to get to know the operating behaviour and the important characteristic variables of centrifugal pumps.

HM 283 features a closed water circuit with water tank and a centrifugal pump with variable speed via frequency converter. The pump housing is transparent. This enables to observe the pump impeller in operation and the occurrence of cavitation.

Valves in the inlet and outlet of the pump allow the setting of different pressure conditions.

The experimental unit is fitted with sensors for pressure, temperature and flow rate. The microprocessor-based measuring technique is well protected in the housing. The measured values are transmitted directly to a PC via USB where they can be analysed using the software included.

All the advantages of software-supported experiments with operation and evaluation are offered by the GUNT software and the microprocessor.

Learning objectives/experiments

- principle of operation of a centrifugal pump
- recording of pump characteristics
- effect of speed on head
- effect of speed on flow rate
- determination of pump efficiency
- cavitation effects
- effect of incorrect direction of rotation

HM 283
Experiments with a centrifugal pump

1 water tank, 2 temperature sensor, 3 valve at intlet, 4 pressure sensor at inlet, 5 pump, 6 pressure sensor at outlet, 7 motor, 8 flow meter, 9 valve at outlet

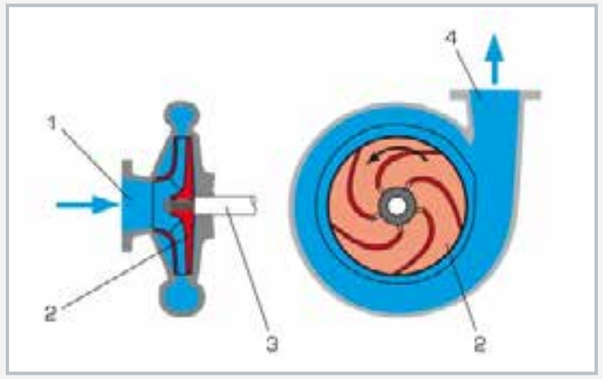

Principle of operation of a centrifugal pump
1 water inlet, 2 pump impeller, 3 pump shaft, 4 water outlet

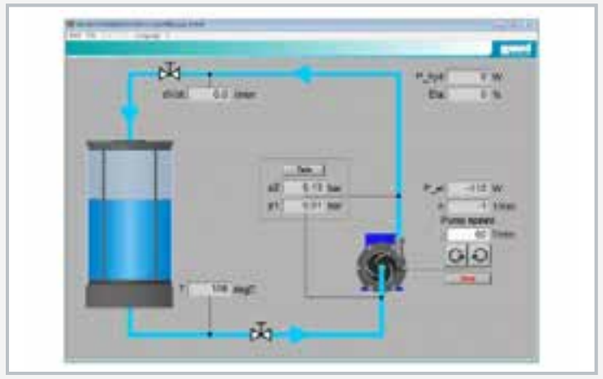

Operating interface of the powerful software

Specification

[1] functioning and operating behaviour of a centrifugal pump
[2] closed water circuit contains centrifugal pump with drive motor and a transparent water tank
[3] transparent housing for observing the pump impeller
[4] variable speed via frequency converter
[5] adjustment of pressure conditions at inlet and outlet side of the pump by valves
[6] sensors for pressure at inlet and outlet side of the pump, temperature and flow rate
[7] due to integrated microprocessor-based instrumentation no additional devices with error-prone wiring are required
[8] display and evaluation of the measured values as well as operation of the unit via software
[9] GUNT software with control functions and data acquisition via USB under Windows 7, 8.1, 10

Technical data

Centrifugal pump with drive motor
- power consumption: 370W
- speed: 0...3000min^{-1}
- max. flow rate: approx. 40L/min
- max. head: approx. 10m

Water tank: approx. 15L

Measuring ranges
- pressure (inlet): ±1bar
- pressure (outlet): 0...5bar
- flow rate: 3,5...50L/min
- temperature: 0...130°C

230V, 50Hz, 1 phase
230V, 60Hz, 1 phase; 120V, 60Hz, 1 phase
UL/CSA optional
LxWxH: 660x590x720mm
Weight: approx. 46kg

Required for operation

PC with Windows

Scope of delivery

1 experimental unit
1 GUNT software CD + USB cable
1 set of instructional material

HM 284
Series and parallel configuration of pumps

Description

- **characteristic behaviour of pumps during single pump operation, series or parallel configuration**
- **closed water circuit**
- **GUNT software for data acquisition, visualisation and operation**
- **part of the GUNT-Labline fluid energy machines**

In complex systems, pumps can be connected in series or in parallel. In serial operation the heads of the pumps are added and in parallel operation the flow rates (capacities) of the pumps are added.

The experimental unit provides the determination of the characteristic behavior for single operation and interaction of two pumps.

HM 284 features a closed water circuit with a water tank and two centrifugal pumps with drive motors. The speed of one motor is variably adjustable by a frequency converter. The other pump is fitted with a motor with fixed speed, this pump can be added to the system.

The impellers of both pumps are mounted in transparent housings and can be observed during operation. Valves enable to easily switch change between single pump, series or parallel pump operation. The system behaviour is analyzed with the aid of a valve at the outlet of the pump adjusting the flow resistance.

The experimental unit is fitted with sensors for pressure and flow rate. The microprocessor-based measuring technique is well protected in the housing. The measured values are transmitted directly to a PC via USB where they can be analysed using the software included.

All the advantages of software-supported experiments with operation and evaluation are offered by the GUNT software and the microprocessor.

Learning objectives/experiments

- operating behaviour of centrifugal pumps
  - single pump
  - series configuration
  - parallel configuration
- recording of pump curves
- determination of pump efficiencies
- recording of system characteristic

HM 284
Series and parallel configuration of pumps

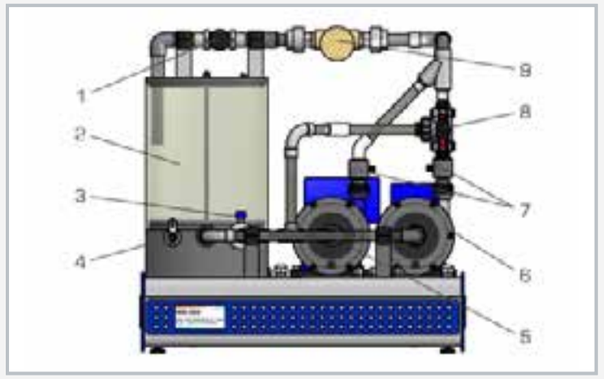

1 valve for adjusting the flow rate, 2 water tank, 3 valve for configurating parallel/series operation, 4 water drain, 5 pump with fixed speed, 6 pump with variable speed, 7 pressure sensor at outlet, 8 three-way valve for parallel/series operation, 9 flow meter

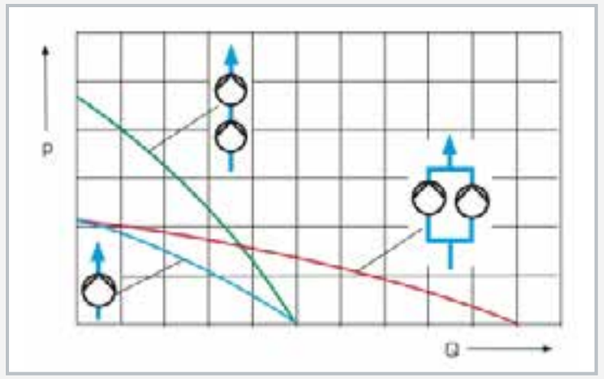

Characteristic curves at different operating modes
blue: single pump operation, red: parallel configuration of pumps, green: series configuration of pumps; p pressure, Q flow rate

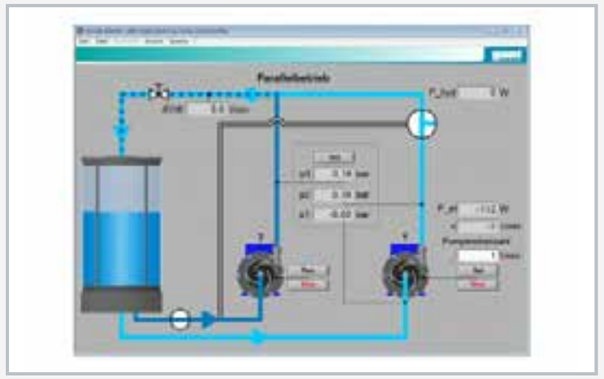

Operating interface of the powerful software

Specification

[1] investigation and operating behaviour of pumps in various operating modes
[2] single pump, series or parallel pump operation, configurable via valves
[3] closed water circuit contains centrifugal pumps with drive motor and a transparent water tank
[4] one pump with variable speed and one pump with fixed speed
[5] adjustment of flow resistance by a valve at outlet of the pump
[6] sensors for pressure at inlet and outlet of the pumps and flow rate
[7] due to integrated microprocessor-based instrumentation no additional devices with error-prone wiring are required
[8] display and evaluation of the measured values as well as operation of the unit via software
[9] GUNT software with control functions and data acquisition via USB under Windows 7, 8.1, 10

Technical data

Centrifugal pumps with motors
- power consumption: 370W each

Pump with variable speed: 0...3300min^{-1}
- max. flow rate: 40L/min
- max. head: 10m

Pump with fixed speed: approx. 2800min^{-1}
- max. flow rate: 40L/min
- max. head: 10m

Water tank: approx. 15L

Measuring ranges
- pressure (inlet): ±1bar
- pressure (outlet): 2x 0...5bar
- flow rate: 10...140L/min

230V, 50Hz, 1 phase
230V, 60Hz, 1 phase; 120V, 60Hz, 1 phase
UL/CSA optional
LxWxH: 670x600x670mm
Weight: approx. 62kg

Required for operation

PC with Windows

Scope of delivery

1 experimental unit
1 GUNT software CD + USB cable
1 set of instructional material

HM 300
Hydraulic circuit with centrifugal pump

Description

- **measurement of pressure conditions in valves and fittings and a pump**
- **measurement of the flow rate**
- **clearly arranged pump circuit**

Hydraulic circuits are designed according to their task and their area of application. Designing hydraulic circuits requires knowledge of flow behaviour and pressure losses in valves and fittings, as well as characteristics of the pump. A hydraulic circuit can be compared to an electrical circuit. This analogy can be made evident in the HM 300 experimental unit.

The HM 300 experimental unit includes a centrifugal pump, a rotameter, a diaphragm valve, a water tank and various other valves and fittings. After filling the system once the experimental unit can be operated independently from the water supply.

The flow is adjusted by valves and read off a rotameter. The pressure measuring points in the pipe system are designed as annular chambers. This creates a largely interference-free pressure measurement. Also supplied is an electronic pressure meter for differential pressure measurement. The pressure measurement points are connected in pairs to the pressure meter and the respective differential pressure read off the display.

Learning objectives/experiments

- recording the pump characteristic
- pressure losses at various valves and fittings depending on the flow
- determination of the operating point in a hydrostatic circuit

HM 300
Hydraulic circuit with centrifugal pump

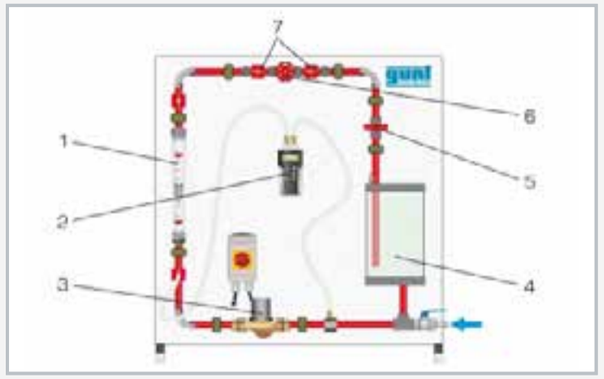

1 flow meter, 2 pressure meter, 3 pump, 4 tank, 5 valve for throttling, 6 diaphragm valve, 7 pressure measuring points

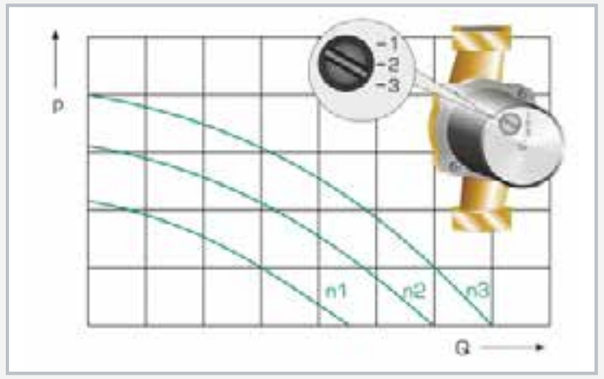

Characteristics of the pump at different speeds: n speed, p pressure, Q flow rate

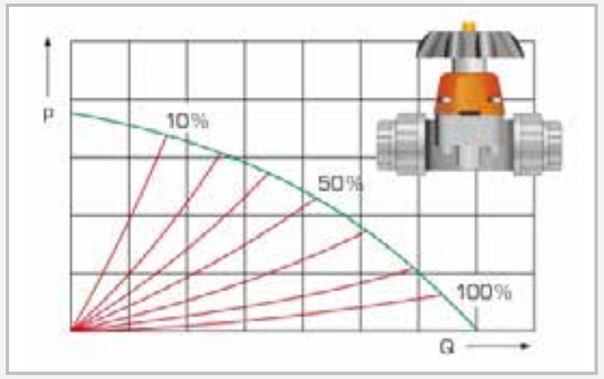

Characteristics of the valve at different degrees of openness up to 100%: p pressure, Q flow rate

Specification

[1] pressure conditions at various measuring objects
[2] measuring objects: pump, flow meter, diaphragm valve
[3] centrifugal pump with 3 different speeds
[4] closed water circuit
[5] flow can be adjusted via valves
[6] flow measurement using rotameter
[7] annular chambers allow easy measurement of pressure
[8] differential pressure measurement using electronic pressure meter

Technical data

Tank
- volume: 8,5L

Pump:
- max. power consumption: 70W
- max. flow rate: $5m^3/h$
- max. head: 6m
- three switching stages for speed selection

Measuring ranges
- flow rate: 150...1600L/h
- differential pressure: ±350mbar

230V, 50Hz, 1 phase
230V, 60Hz, 1 phase; 120V, 60Hz, 1 phase
UL/CSA optional
LxWxH: 1000x610x1100mm
Weight: approx. 55kg

Scope of delivery

1 experimental unit
1 pressure meter
1 set of instructional material

HM 305
Centrifugal pump trainer

The illustration shows a similar unit.

Description

- **principle of operation of a centrifugal pump**
- **closed water circuit**
- **centrifugal pump, standard design**

Centrifugal pumps are turbomachines that are used for conveying fluids. In centrifugal pumps, the head depends on the flow rate. This dependency is understood to be the operating behaviour of the pump and is represented in the characteristic diagram of the pump.

The trainer HM 305 is intended for experiments on the fundamental behaviour of a hydraulic circuit. HM 305 is suitable for both training in vocational colleges and for laboratory experiments in higher education.

The equipment of the trainer includes a closed water circuit and a powerful, standard centrifugal pump. Standard pumps are built according to industrial standards. The standard defines rating schemes and key dimensions so that standard pumps from different manufacturers can be exchanged without replacing the piping and ground plate.

The centrifugal pump is powered by a three-phase motor. The speed can be adjusted to the desired value with the frequency converter. An inductive, non-contact position encoder on the engine shaft records the speed. The drive motor is mounted in a pendulum bearing such that the drive torque can be measured with a force sensor and the mechanical drive power can be determined.

Manometers display the pressure on the pump's inlet and outlet. The flow rate is measured with an electromagnetic flow rate sensor. The flow rate can also be determined by means of a differential pressure measurement on an orifice plate flow meter.

The speed, torque, and electrical power consumption of the pump and the flow rate are shown on a digital display on the switch cabinet.

Learning objectives/experiments

- recording of pump characteristics
- recording of system characteristics
- determination of the flow rate by means of an electromagnetic flow rate sensor or an orifice plate flow meter and a differential pressure measurement
- calculation of efficiencies

HM 305
Centrifugal pump trainer

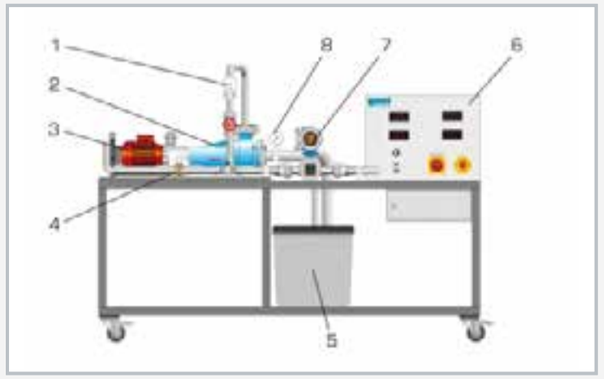

1 outlet manometer, 2 centrifugal pump, 3 drive motor, 4 orifice plate flow meter, 5 tank, 6 switch cabinet with display and control elements, 7 electromagnetic flow meter, 8 inlet manometer

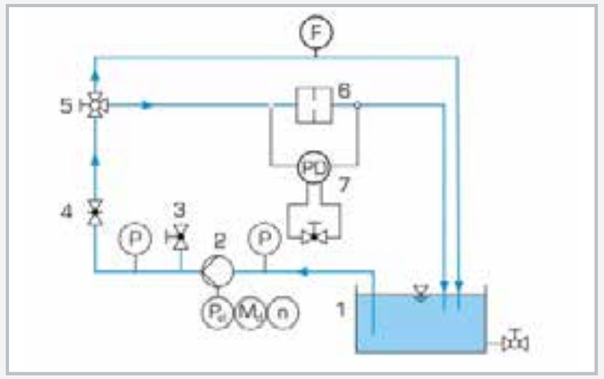

1 tank, 2 pump, 3 water connection for filling, 4 gate valve, 5 3-way valve, 6 orifice plate flow meter, 7 differential pressure sensor with bleed valve
P pressure, F flow rate, P_{el} power, n speed, M_d torque

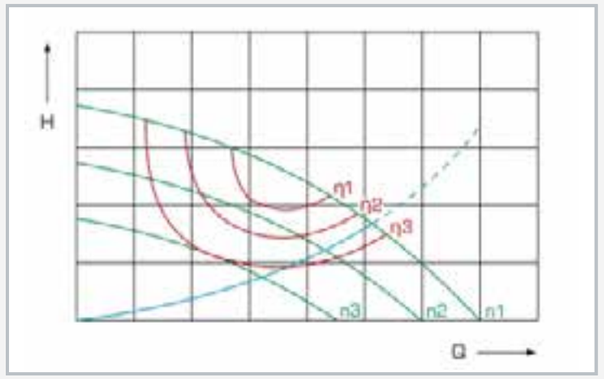

Characteristic diagram of the centrifugal pump
green: pump characteristics for different speeds, blue: system characteristics, red: characteristics of constant efficiencies
H head, Q flow, n speed

Specification

[1] examination of a standard centrifugal pump
[2] closed water circuit
[3] three-phase motor to power the pump with variable speed via a frequency converter
[4] drive motor with pendulum bearing
[5] non-contact speed measurement at the engine shaft and force sensor for measuring the drive power
[6] determination of the flow rate by using an electromagnetic flow rate sensor, or an orifice plate flow meter and a differential pressure measurement
[7] manometer at the inlet and outlet of the centrifugal pump
[8] digital displays for torque, speed, electrical power consumption and flow

Technical data

Centrifugal pump
- max. flow rate: approx. $15m^3/h$
- max. head: approx. 16m

Drive motor with variable speed
- power output: 1,1kW
- speed range: 0...2400min^{-1}

Tank
- volume: 96L

Measuring ranges
- pressure: 1x -0,6...0bar, 1x 0...2,5bar
- flow rate: 5...600L/min
- speed: 0...5000min^{-1}
- torque: 0...10Nm
- power consumption: 0...2,2kW

230V, 50Hz, 1 phase
230V, 60Hz, 1 phase
230V, 60Hz, 3 phases
LxWxH: 2000x750x1480mm
Weight: approx. 215kg

Scope of delivery

1 trainer
1 set of accessories
1 set of instructional material

HM 332
Pump characteristics for parallel and series configuration

Description

- **operation of centrifugal pumps in parallel and series configuration**
- **identification of pump and system characteristics**

In practice, several pumps are often installed either in parallel or in series configuration for economic reasons. In in parallel configuration the pumps operate in a common pipe. This requires that the pumps used in each case can achieve the same head. Parallel configurations offer the advantage that when demand is low only one pump works and other pumps are switched on as the flow rate increases. In series configuration pumps with equal flow rates are arranged in a row. This arrangement allows the bridging of large heads and is often more cost-effective than the use of a single pump with large head.

The HM 332 trainer studies the cooperation of two centrifugal pumps and illustrates the differences in parallel and series configuration. The metrology components used are common in industry and therefore closely related to practice.

The trainer has a closed water circuit and is equipped with two identical pumps that are driven by speed-controlled motors. The rotational speed of the motors for the centrifugal pumps can be adjusted via frequency converters. All motors are mounted on swivel bearings so that the drive torque can be measured via a force sensor, allowing the mechanical drive power to be determined.

Sensors detect the pressures at inlet and outlet of the pumps. The flow rate is measured by an electromagnetic flow meter. Relevant measured values are read from digital displays and can be transmitted simultaneously via USB directly to a PC where they can be analysed using the software included. The performance data of the pump and losses in the pipe are calculated in the software and shown in the form of characteristics. Characteristic parameters of pumps are determined from the measured values. Furthermore, students are familiarised with the operating behaviour of centrifugal pumps and can practise the correct way to start up and shut down such a pump system.

Learning objectives/experiments

- investigate behaviour of centrifugal pumps in operation
- recording pump characteristics
- recording system characteristics
- determining efficiency
- investigation of series and parallel configuration of pumps
- starting up and shutting down pump systems

HM 332
Pump characteristics for parallel and series configuration

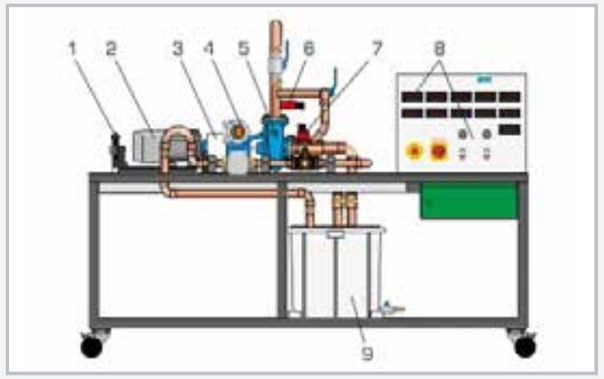

1 force sensor, 2 drive motor, 3 speed sensor, 4 electromagnetic flow meter, 5 pump, 6 pressure sensor at outlet, 7 pressure sensor at inlet, 8 displays and controls, 9 supply tank

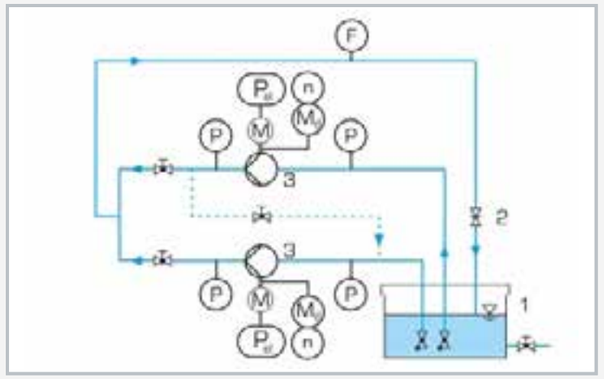

Parallel configuration of pumps: 1 supply tank, 2 valve for adjusting the flow rate, 3 pump with drive motor; P pressure, F flow rate, n speed, M_d torque, P_{el} power

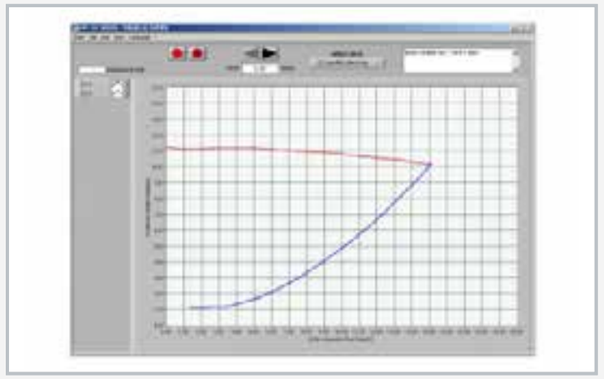

Software screenshot: red: pump characteristic, blue: system characteristic with parallel configuration of pumps

Specification

[1] trainer with 2 centrifugal pumps which are operated in series or parallel configuration
[2] closed water circuit
[3] drive motors with adjustable speed
[4] motor with pendulum bearing, torque measurement via lever arm and force sensor
[5] inductive speed sensor on the motor
[6] electromagnetic flow meter
[7] digital displays for power consumption, torque, speed, pressure and flow rate
[8] GUNT software for data acquisition via USB under Windows 7, 8.1, 10

Technical data

2 pumps
- max. flow rate: 18,5m^3/h
- max. head: 19,6m

2 drive motors
- power output: 1,1kW
- speed range: 0...3000min^{-1}

Supply tank: 96L

Measuring ranges
- pressure (inlet):
  - pump 1: -1...0,6bar
  - pump 2: -1...3bar
- pressure (outlet):
  - pump 1: 0...2,5bar
  - pump 2: 0...6bar
- flow rate: 0...480L/min
- speed: 2x 0...3000min^{-1}
- torque: 2x 0...10Nm
- power: 2x 0...2,2kW

230V, 50Hz, 1 phase
230V, 60Hz, 1 phase; 230V, 60Hz, 3 phases
UL/CSA optional
LxWxH: 2000x750x1700mm
Weight: approx. 310kg

Required for operation

PC with Windows recommended

Scope of delivery

1 trainer
1 GUNT software CD + USB cable
1 set of instructional material

HM 362 Comparison of pumps

In order to properly use a pump, it is important to know the pump's operating behaviour. The HM 362 trainer offers students the opportunity to compare the operating behaviour of three different types of pumps. The trainer includes two centrifugal pumps, a piston pump as positive displacement pump and a self-priming side channel pump. The side channel pump primarily works as a centrifugal pump and, depending on the fill level, may also act as a positive displacement pump. This means a special feature of the side channel pump is the ability to convey gases.

Investigations on series and parallel configurations can be conducted with the two identical centrifugal pumps.

The trainer provides a ready-prepared place for experiments with its own pump. This space is fitted with a variable speed three-phase motor, whose direction of rotation is reversible.

The measurements are supported and visualised by the GUNT data acquisition software.

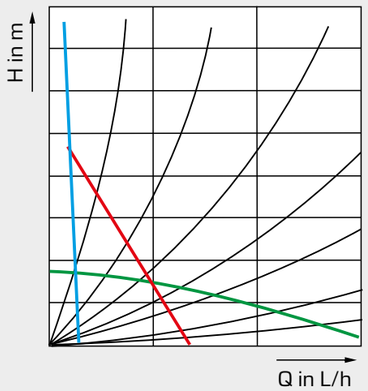

Compare operating behaviour of different types of pumps

centrifugal pump, side channel pump, piston pump, system characteristics;
Q flow, **H** head

Each pump testing station has a measuring device for detecting the drive torque

Each pump has an inlet and outlet above pressure sensors

Sensors for flow measurement

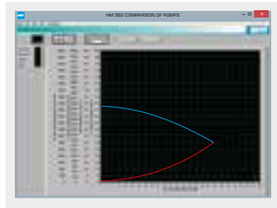

Record characteristic curves

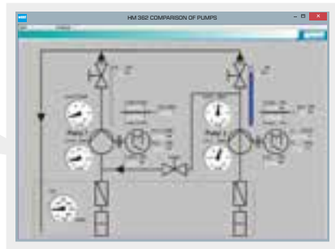

Display of measured data on displays on the trainer and in the GUNT software on a PC

Piston pump

Free space for investigation of additional pumps

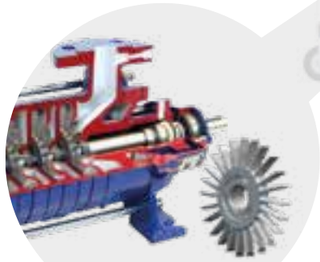

Side channel pump

Two centrifugal pumps

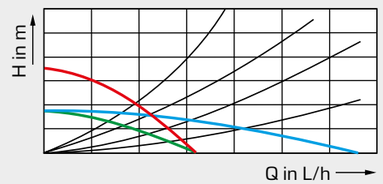

single pump, series configuration, parallel configuration, system characteristics;
Q flow, **H** head

HM 362
Comparison of pumps

Description

- **investigation of the operating behaviour of centrifugal, piston and side-channel pumps**
- **all pumps driven separately by three-phase AC motors**
- **centrifugal pumps can be operated in series or parallel configuration**

The experiments familiarise students with various pump types, such as centrifugal and positive-displacement pumps.

The HM 362 trainer includes two centrifugal pumps, one piston pump as a positive-displacement pump and a self-priming side-channel pump. The side-channel pump works primarily as a centrifugal pump and, depending on liquid level, can also act as a positive-displacement pump. This means, as a special feature, the side-channel pump also permits gases to be pumped.

The pump being investigated pumps water in a closed circuit. In the process, the performance data of the pump and pressure losses in the pipeline are recorded. The centrifugal pumps can also be operated in parallel or in series configuration. Each pump is driven by a separate three-phase AC motor. The speed of the motors for the centrifugal pumps is variably adjustable by a frequency converter. All motors are mounted on swivel bearings, so the torque can be measured by way of a force sensor, enabling the mechanical drive power output to be determined.

One free position is likewise equipped with a reversible three-phase AC motor with variable speed. This position can be used for mounting of any pump.

Experiments demonstrate the basic operating behaviour of various pump types.

Relevant measured values can be read on digital displays. At the same time, the measured values can also be transmitted directly to a PC via USB. The data acquisition software is included. The performance data of the pump and losses in the pipeline are calculated by the software and represented by characteristic curves. The operating point of the pump can be determined from these characteristics.

Learning objectives/experiments

- investigation and comparison of the operating behaviour of various pump types:
  - centrifugal pumps
  - piston pump (positive-displacement pump)
  - side-channel pump
- recording a pump characteristic curve
- recording a system characteristic curve
- determining efficiency
- investigation and comparison of parallel and series configuration of centrifugal pumps
- comparison of pump types

HM 362
Comparison of pumps

1 flow control valve (at outlet), 2 connection for additional pump, 3 piston pump motor, 4 motor for additional pump, 5 piston pump, 6 flow rate sensor, 7 storage tank, 8 switch cabinet with displays and controls, 9 centrifugal pump, 10 side-channel pump, 11 pressure sensor

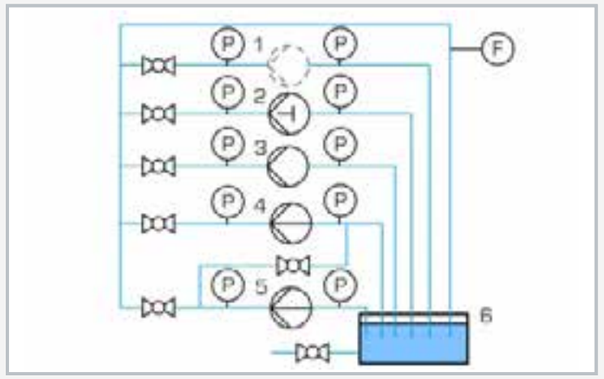

Process schematic of the trainer
1 free place for additional pump (provided by user), 2 piston pump, 3 side-channel pump, 4+5 centrifugal pump, 6 storage tank; F flow rate, P pressure

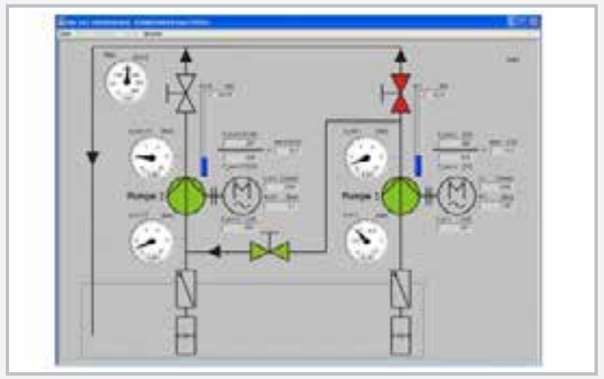

Software screenshot: series configuration of centrifugal pumps

Specification

[1] experiments relating to key issues in pump engineering
[2] comparison of various pump types: centrifugal pump, piston pump, side-channel pump
[3] operation of centrifugal pumps in parallel or series configuration
[4] free position for additional pump
[5] three-phase AC motors for centrifugal pumps and additional motor with variable speed by frequency converter
[6] GUNT software for data acquisition via USB under Windows 7, 8.1, 10

Technical data

Centrifugal pump 2x
- max. flow rate (Q): 300L/min
- max. head (H): 16,9m
- nominal speed: 2900min^{-1}

Three-phase AC motor 2x, for centrifugal pump
- power output: 1,1kW

Side-channel pump, self-priming, one-stage
- Q: 83,3L/min, H: 50m
- nominal speed: 1450min^{-1}

Three-phase AC motor for side-channel pump
- power output: 1,1kW

Piston pump
- Q: 17L/min, H: 60m
- nominal speed: 405min^{-1}

Three-phase AC motor for piston pump
- power output: 0,55kW

Three-phase AC motor, additional motor, reversible
- power output: 0,75kW
- speed range: 750...3000min^{-1}

Measuring ranges
- flow rate: 0...500L/min
- pressure (inlet): -1...1,5bar
- pressure (outlet): 0...10bar
- torque: 0...15Nm
- speed: 0...3000min^{-1}
- pump electrical power consumption: 0...2kW

400V, 50Hz, 3 phases
400V, 60Hz, 3 phases
230V, 60Hz, 3 phases
LxWxH: 2860x1200x1960mm
Weight: approx. 430kg

Required for operation

PC with Windows recommended

Scope of delivery

trainer, 1 GUNT software CD + USB cable, 1 set of instructional material

GUNT-FEMLine
Water pump training part 1 roto dynamic pumps

Water pumps are driven machines. They can be designed as positive displacement pumps or rotodynamic pumps. The selection of the correct pump type is crucial when designing industrial systems or installing a pump. This is why it is important that future engineers understand the characteristics of pumps and interpret diagrams to be able to distinguish between the different types of pumps.

1st part | Rotodynamic pumps as water pumps:

The centrifugal pump is the most common water pump. It belongs to the group of rotodynamic pumps. The water pump training from GUNT offers four different types of centrifugal pumps, based on which students can learn about the mode operation and the differences of these types:

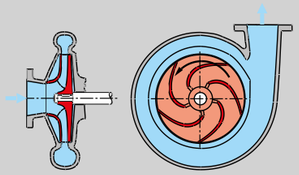

Standard design centrifugal pump

Standard pumps are pumps that are designed in accordance with international standards. The standard defines rating schemes and key dimensions so that standard pumps from different manufacturers can be exchanged without replacing the piping and ground plate.

HM 365.11
Centrifugal pump, standard design

Centrifugal self-priming pump

Self-priming pumps are able to suck in and transport air and water. In contrast to a simple centrifugal pump, they can also be started if there is air in the intake line. This is possible because of an additional side-channel suction stage that removes the air from the intake line and creates the negative pressure that is needed to suck in the fluid.

HM 365.12
Centrifugal pump, self-priming

4-stage centrifugal pump

In centrifugal pumps with multiple stages, several impellers are arranged in series. This allows the pump to overcome large differences in head.

HM 365.13
Centrifugal pump, multistage

Different circuit configurations for centrifugal pumps

In complex systems, pumps can be connected in series or in parallel. In series operation the head is the sum of the individual heads; in parallel operation the flow rates of the individual pumps are combined.

HM 365.14
Centrifugal pumps,
series and parallel connected

Side channel pump

Side channel pumps form a category between positive displacement pumps and rotodynamic pumps. During the suction phase the side channel pump operates according to the positive displacement principle. As soon as the suction process is over, the side channel pump starts working like a centrifugal pump. The centrifugal force of the rotating impeller separates the fluid and gas. Side channel pumps are therefore self-priming pumps.

HM 365.15
Side channel pump

Axial-flow pump

Axial-flow pumps are also known as propeller pumps. Axial-flow pumps come with fixed blades and with variable blades. The flow passes through the impeller in axial direction. In axial-flow pumps, the pressure is not built up by the effect of centrifugal force but, like the aerodynamic principle, by the propeller blade. Propeller pumps are not self-priming pumps. They are used when high flow rates and a small head are needed. The typical areas of application for propeller pumps are drainage systems, wastewater treatment plants and cooling water supply systems.

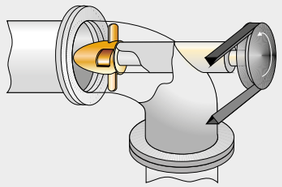

HM 365.45
Axial-flow pump

Sectional models and assembly training

HM 700.17 Cutaway model: centrifugal pump

To complete the water pump training, GUNT offers **sectional models and assembly and maintenance training** for different pumps. Please refer to catalogue 4 for more information on these devices.

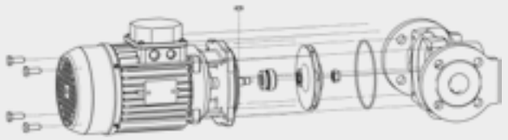

MT 185 Assembly & maintenance exercise: in-line centrifugal pump exploded drawing of an inline centrifugal pump

MT 181 Assembly & maintenance exercise: multistage centrifugal pump

HM 365
Universal drive and brake unit

Learning objectives/experiments

- asynchronous motor as a drive or brake unit in connection with one of the accessories
  - torque measurement
  - speed measurement

Description

- **base module of the GUNT-FEM-Line**
- **asynchronous motor with frequency converter and precise adjustment of the drive and brake torque**
- **connection of HM 365 and the driving or driven machine with a V-belt drive**
- **setting up a complete test stand with various accessories**

HM 365 is the base module of the GUNT-FEMLine, on which students can carry out experiments on fluid machinery. This equipment series covers five training courses on water and oil pumps, turbines, and systems engineering and engine technologies.

The complete experimental setup includes the base module HM 365, the fluid energy machine to be investigated and, where needed, a supply unit or a test stand. The fluid energy machine under investigation is connected to the HM 365 base module via a belt drive. Fasteners connect the HM 365 and the trainer to the accessories.

The main function of HM 365 is to provide the drive or brake power necessary to study the selected driving or driven machine. This power is generated by an air-cooled asynchronous motor with a frequency converter. The asynchronous motor operates as a generator or a motor, as required. As a generator, it acts as a brake on the fluid energy machine, in this case motors or turbines, and diverts the energy. As a motor, it powers the fluid energy machine under investigation, e.g. pumps or compressors.

The energy that is created during the braking process in generator mode is converted into heat at a load resistor. The drive and/or brake torque can be adjusted precisely. It is measured with a force sensor. For this purpose, the asynchronous motor is suspended as a pendulum. The motor can be moved to tension the V-belt.

HM 365 is fitted with digital displays for speed and torque. Data between the base module and the accessories are exchanged through a data cable. The measured values can be transmitted simultaneously via USB directly to a PC. Each of the individual accessories is delivered with specific evaluation software.

HM 365
Universal drive and brake unit

1 display and control elements, 2 spindle tensioning device for V-belt, 3 load resistor, 4 fastener, 5 clamping lever for tensioning device, 6 transparent maintenance flap, 7 protective hood for V-belt

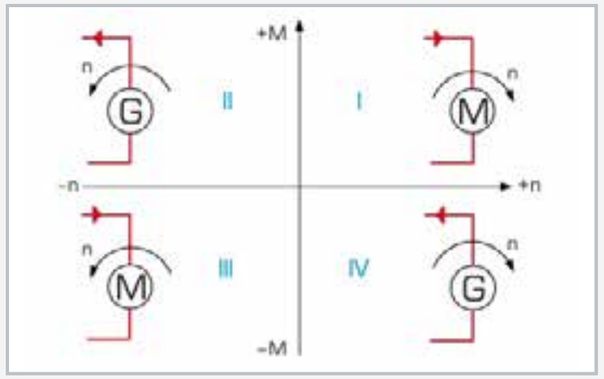

Representation of 4-quadrant operation in speed/torque diagram: I motor operation, clockwise rotation (drive), II generator operation, anticlockwise rotation (brake), III motor operation, anticlockwise rotation (drive), IV generator operation, clockwise rotation (brake); red line: energy flow, M torque, n speed

Example of a complete experimental setup: HM 365.45 axial-flow pump, connected to HM 365 universal drive and brake unit

Specification

[1] drive and brake unit used for studying different driving or driven machines
[2] asynchronous motor with frequency converter allows 4-quadrant operation: generator or motor mode
[3] asynchronous motor with pendulum suspension, torque measurement via lever arm and force sensor
[4] optical sensor for recording the speed
[5] data exchange between base module and accessories through data cable
[6] measured values for speed and torque are digitally displayed on the device

Technical data

Asynchronous motor with frequency converter
- power: 2200W
- max. speed: approx. 3000min^{-1}
- max. torque: approx. 12Nm

V-belt operation
- length of V-belt: 1157mm, 1180mm, 1250mm
- type of V-belt: SPA
- diameter of V-belt pulley: 125mm

Resistive load: 72Ω, 2400W

Measuring ranges
- torque: ±15Nm
- speed: 0...5000min^{-1}

400V, 50Hz, 3 phases
400V, 60Hz, 3 phases
230V, 60Hz, 3 phases
UL/CSA optional
LxWxH: 1000x800x1250mm
Weight: approx. 125kg

Scope of delivery

1 base module
1 set of accessories
1 manual

HM 365.10
Supply unit for water pumps

Learning objectives/experiments

- in combination with HM 365 and a pump of the series HM 365.11 – HM 365.19
  - recording of pump characteristics
  - determination of the power requirement of the pump
  - determination of the hydraulic power of the pump
  - determination of the pump efficiency
  - determination of the system characteristics and the pump's operating point
  - checking of the required NPSH value of the rotodynamic pumps

Description

- **closed water circuit to supply the water pumps**
- **GUNT Software for data recording and visualisation**
- **part of the GUNT-FEMLine**

Pumps belong to the group of driven machines. Their task is to transport incompressible fluids. Pumps are categorised into rotodynamic pumps and positive displacement pumps, depending on their principle of operation.

Rotodynamic pumps transfer energy to the fluid with the help of blades arranged on an impeller. The blades are shaped in a way that the flow around them causes a pressure difference between the inlet and outlet side.

Positive displacement pumps move the pumping medium by changing the volume and by opening and closing inlets and outlets correspondingly. Depending on the design of the displacement device the volume changes through oscillating or rotating movements. Rotodynamic pumps, such as centrifugal pumps, are of advantage where large flow rates are required, while positive displacement pumps, such as piston pumps, are better suited for smaller flow rates with a high head.

The supply unit HM 365.10 supplies the working medium water for several centrifugal pumps and positive displacement pumps (HM 365.11 to HM 365.19). The pumps are powered in conjunction with the HM 365 Universal Drive and Brake Unit.

The trainer works independently of the water supply network, using a closed circuit with a storage tank. The individual pumps are placed on the work surface and connected by means of hoses with quick-release couplings, and attached with clamping levers. The pump is connected to the drive unit, which provides it with power via a V-belt.

The flow rate is measured with an electromagnetic flow rate sensor. A temperature sensor records the temperature in the piping system. Each pump is equipped with pressure sensors for measuring the pressure. The measured values are read from digital displays on the supply unit and can be transmitted simultaneously via USB directly to a PC, where they can be analysed using the included software.

HM 365.10
Supply unit for water pumps

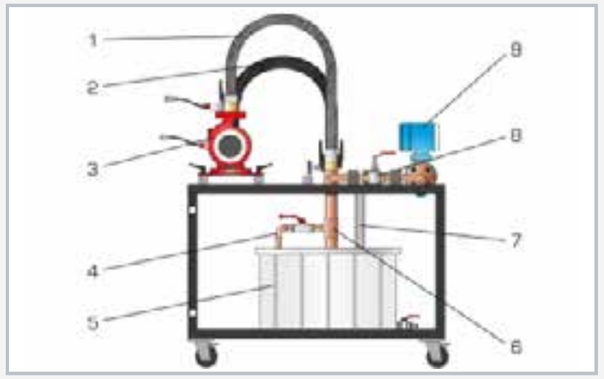

1 outlet, 2 inlet, 3 accessories: pump (HM 365.11 – HM 365.19), 4 drain line, 5 storage tank, 6 intake pipe, 7 reflux, 8 flow control valve, 9 flow meter

Software screenshot: process schematic

Functional experimental setup: HM 365 drive unit (left), HM 365.10 with pump to be examined (right)

Specification

[1] supply unit for operation of different water pumps HM 365.11 to HM 365.19
[2] closed water circuit
[3] connection of pumps via flexible hoses with quick-release couplings
[4] pressure sensors at the inlet and outlet included in the scope of delivery of the pumps
[5] measurement of the water temperature in the pipeline system with PT100
[6] flow measurement with electromagnetic flow meter
[7] digital display of flow, pressure and temperature
[8] GUNT software for data acquisition via USB under Windows 7, 8.1, 10

Technical data

Storage tank: 96L

Measuring ranges
- pressure (inlet): ±1bar
- pressure (outlet): 0...6bar
- temperature: 0...100°C
- flow rate: 0...480L/min

230V, 50Hz, 1 phase
230V, 60Hz, 1 phase
120V, 60Hz, 1 phase
UL/CSA optional
LxWxH: 1200x850x1150mm
Weight: approx. 140kg

Required for operation

PC with Windows recommended

Scope of delivery

1 supply unit
1 display and control unit
1 set of hoses
1 GUNT software CD + USB cable
1 set of instructional material

HM 365.11
Centrifugal pump, standard design

Learning objectives/experiments

- in combination with HM 365 and HM 365.10
  - recording of pump characteristics
  - determination of the power requirement and the hydraulic power
  - determination of the pump efficiency
  - determination of the system characteristics and the operating point of the pump
  - checking of the necessary NPSH value of the pump

Specification

[1] examination of a standard centrifugal pump
[2] operation with HM 365.10 Supply Unit for Water Pumps
[3] powered by HM 365 Universal Drive and Brake Unit
[4] pressure sensors at the inlet and outlet of the pump
[5] pressure display on the display unit of HM 365.10

Technical data

Standard centrifugal pump
- max. flow rate: $24m^3/h$
- max. head: 22m
- nominal speed: approx. $2900min^{-1}$

LxWxH: 640x300x420mm
Weight: approx. 42kg

Scope of delivery

1 centrifugal pump

Description

- **operating behaviour of a standard centrifugal pump**
- **part of the GUNT-FEMLine**

Standard pumps are pumps that are designed in accordance with international standards. The standard defines rating schemes and key dimensions so that standard pumps from different manufacturers can be exchanged without replacing the piping and ground plate.

HM 365.11 is a standard, non-self-priming pump that is delivered ready for installation, mounted on a plate. The centrifugal pump is installed in the supply unit HM 365.10 with just a few simple steps and connected via hoses and attached with clamping levers. For power supply, the pump is connected to the drive unit HM 365 with a V-belt.

The pressures at the inlet and outlet of the centrifugal pump are recorded with sensors. The measured values are read from digital displays on the supply unit and can be transmitted simultaneously via USB directly to a PC, where they can be analysed using the included software.

HM 365.12
Centrifugal pump, self-priming

The illustration shows a similar unit.

Learning objectives/experiments

- in combination with HM 365 and HM 365.10
  - recording of pump characteristics
  - determination of the power requirement and the hydraulic power
  - determination of the pump efficiency
  - determination of the system characteristics and the operating point of the pump
  - checking of the necessary NPSH value of the pump

Specification

[1] investigation of a self-priming centrifugal pump
[2] operation with HM 365.10 Supply unit for water pumps
[3] powered by HM 365 Universal drive and brake unit
[4] pressure sensors at the inlet and outlet of the pump
[5] pressure display on the display unit of HM 365.10

Technical data

Self-priming centrifugal pump
- max. flow rate: $18m^3/h$
- max. head: 18m
- nominal speed: $2900min^{-1}$

LxWxH: 640x300x420mm
Weight: approx. 44kg

Scope of delivery

1 centrifugal pump

Description

- **operating behaviour of a self-priming centrifugal pump**
- **part of the GUNT-FEMLine**

Self-priming pumps are able to suck in and transport air and water. In contrast to a simple centrifugal pump, they can also be started if there is air in the intake line. This is possible because of an additional side-channel suction stage that removes the air from the intake line and creates the negative pressure that is needed to suck in the fluid.

HM 365.12 is a self-priming pump that is delivered ready for installation, mounted on a plate. The centrifugal pump is installed in the supply unit HM 365.10 with just a few simple steps and connected via hoses with quick-release couplings and attached with clamping levers. For power supply, the pump is connected to the drive unit HM 365 with a V-belt.

The pressures at the inlet and outlet of the centrifugal pump are recorded with sensors. The measured values are read from digital displays on the supply unit and can be transmitted simultaneously via USB directly to a PC where they can be analysed using the included software.

HM 365.13
Centrifugal pump, multistage

Learning objectives/experiments

- in combination with HM 365 and HM 365.10
  - recording of pump characteristics
  - determination of the power requirement and the hydraulic power
  - determination of the pump efficiency
  - determination of the system characteristics and the operating point of the pump
  - checking of the necessary NPSH value of the pump

Specification

[1] investigation of a centrifugal pump with 4 stages
[2] operation with HM 365.10 Supply Unit for Water Pumps
[3] powered by HM 365 Universal Drive and Brake Unit
[4] pressure sensors at the inlet and outlet of the pump
[5] pressure display on the display unit of HM 365.10

Technical data

Centrifugal pump with 4 stages
- max. flow rate: $17m^3/h$
- max. head: 27m
- nominal speed: $1450min^{-1}$
- transmission ratio: 1:1,6

LxWxH: 560x300x440mm
Weight: approx. 64kg

Scope of delivery

1 centrifugal pump

Description

- **operating behaviour of a multistage centrifugal pump**
- **part of the GUNT-FEMLine**

In centrifugal pumps with multiple stages several impellers are arranged in series. This allows the pump to overcome large differences in head.

HM 365.13 is a centrifugal pump with four stages that is delivered ready for installation, mounted on a plate. The centrifugal pump is installed in the supply unit HM 365.10 with just a few simple steps and connected via hoses with quick-release couplings and attached with clamping levers. For power supply, the pump is connected to the drive unit HM 365 with a V-belt. The pump speed is reduced by the transmission ratio of the belt.

The pressures at the inlet and outlet of the centrifugal pump are recorded with sensors. The measured values are read from digital displays on the supply unit and can be transmitted simultaneously via USB directly to a PC, where they can be analysed using the included software.

HM 365.14
Centrifugal pumps, series and parallel connected

Learning objectives/experiments

- recording of pump characteristics
- determination of the power requirement and the hydraulic power in series or parallel connection
- determination of the pump efficiency
- determination of the system characteristics and the operating point for both cases

Specification

[1] examination of standard centrifugal pumps
[2] operation with HM 365.10 Supply Unit for Water Pumps
[3] powered by HM 365 Universal Drive and Brake Unit
[4] driven via HM 365
[5] pressure sensors at the inlet and outlet of the pumps
[6] pressure display on the display unit of HM 365.10

Technical data

Standard centrifugal pump
- max. flow rate: $24m^3/h$
- max. head: 22m
- nominal speed: $2900min^{-1}$

LxWxH: 540x840x510mm
Weight: approx. ca. 97kg

Scope of delivery

2 centrifugal pumps

Description

- **Operating behaviour of two pumps in series or parallel connection**
- **Part of the GUNT-FEMLine**

In complex systems, pumps can be connected in series or in parallel. In series operation, the heads are added, and in parallel operation the flow rates of the pumps are added. The series and parallel configuration of pumps is very well suited to understand the similarities with an electric circuit.

HM 365.14 is equipped with two standard centrifugal pumps that are delivered ready for installation, mounted on a plate. The centrifugal pumps are installed in the supply unit HM 365.10 with just a few simple steps, connected via hoses with quick-release couplings, and attached with clamping levers. To power the pumps, they are connected to the drive unit HM 365 with a V-belt.

The pressures at the inlet and outlet of the centrifugal pumps are recorded with sensors. The measured values are read from digital displays on the supply unit and can be transmitted simultaneously via USB directly to a PC, where they can be analysed using the included software.

HM 365.15
Side channel pump

The illustration shows a similar unit.

Description

- **operating behaviour of a side channel pump**
- **part of the GUNT-FEMLine**

Side channel pumps form a category between positive displacement pumps and rotodynamic pumps. During the suction phase the side channel pump operates according to the positive displacement principle. As soon as the suction process is over, the side channel pump starts working like a centrifugal pump. The centrifugal force of the rotating impeller separates the fluid and gas. Side channel pumps are self-priming pumps.

HM 365.15 is a self-priming, single-stage side channel pump that is delivered ready for installation, mounted on a plate. The pump is installed in the HM 365.10 supply unit with just a few simple steps, connected via hoses with quick-release couplings, and attached with clamping levers. For power supply, the pump is connected to the drive unit HM 365 with a V-belt. The pump speed is reduced by the transmission ratio of the belt.

The pressures at the inlet and outlet of the side channel pump are recorded with sensors. The measured values are read from digital displays on the supply unit and can be transmitted simultaneously via USB directly to a PC, where they can be analysed using the included software.

Learning objectives/experiments

- in combination with HM 365 and HM 365.10
  - recording of pump characteristics, system characteristics, operating point
  - power requirement, hydraulic power, pump efficiency, NPSH value

Specification

[1] investigation of a self-priming, single-stage side channel pump
[2] operation with HM 365.10 Supply unit for water pumps
[3] powered by HM 365 Universal drive and brake unit
[4] pressure sensors at the inlet and outlet of the pump
[5] pressure display on the display unit of HM 365.10

Technical data

Side channel pump, single-stage, self-priming
- max. flow rate: $5m^3/h$
- max. head: 48m
- nominal speed: $1450min^{-1}$
- transmission ratio: 1:2

LxWxH: 400x310x460mm
Weight: approx. 24kg

Scope of delivery

1 side channel pump

First-rate handbooks

GUNT's policy is simple: high quality hardware and clearly developed accompanying instructional material ensure successful teaching and learning about an experimental unit.

The core of the accompanying material are detailed reference experiments that we have carried out. The description of the experiment contains the actual experimental setup right through to the interpretation of the results and findings. A group of experienced engineers develops and maintains the instructional material.

Nevertheless, we are here to help should any questions remain unanswered, either by phone or – if necessary – on site.

HM 365.45
Axial-flow pump

The illustration shows a similar unit.

Learning objectives/experiments

- in combination with HM 365
  - determination of the pressure/volume characteristics
  - determination of the power requirement of the pump
  - determination of the hydraulic power
  - determination of the efficiency
  - determination of the head
  - determination of the system characteristics

Description

- **operating behaviour of an axial-flow pump**
- **part of the GUNT-FEMLine**

In an axial-flow pump the pumping medium flows through the impeller (here a propeller) in the axial direction. In axial-flow pumps, the pressure build-up is not achieved by the centrifugal force but, like the aerodynamic principle, by the propeller blade. Therefore these pumps are also known as propeller pumps. They are not self-priming and the propeller must always be covered by the pumping medium. Axial propeller pumps are used when high flow rates and a small head are needed. The typical areas of application for propeller pumps are drainage systems, wastewater treatment plants and cooling water supply systems.

The HM 365.45 trainer includes an axial propeller pump, a tank and pipelines with generously designed pipe cross-sections. The pump is powered in conjunction with the HM 365 Universal Drive and Brake Unit. The closed water circuit means that the trainer can be used independently of the water system.

The trainer is equipped with measuring elements for the pressures at the inlet and outlet of the pump. A temperature sensor measures the water temperature. The flow rate is measured with an electromagnetic flow meter. The measured values are read from digital displays and can be transmitted simultaneously via USB directly to a PC, where they can be analysed using the software included.

HM 365.45
Axial-flow pump

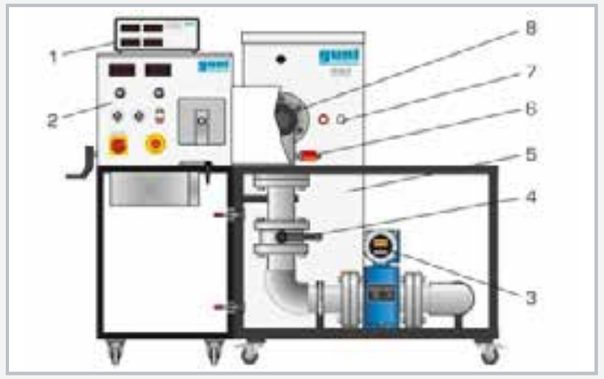

1 measuring amplifier, 2 drive unit HM 365, 3 flow meter, 4 valve, 5 water tank, 6 pressure sensor, 7 temperature sensor, 8 V-belt pulley of the axial-flow pump

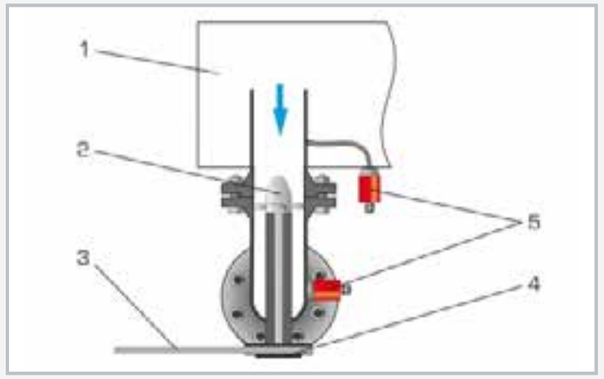

1 tank, 2 pump impeller, 3 drive belt, 4 V-belt pulley, 5 pressure sensors

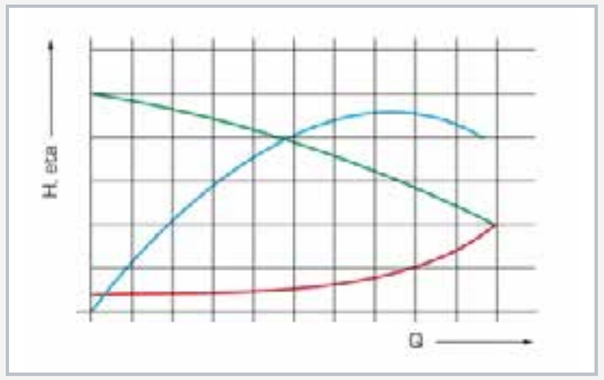

Pump characteristics: Q flow rate; red: system characteristics, green: pump head H, blue: pump efficiency eta

Specification

[1] investigation of an axial-flow pump
[2] closed water circuit
[3] powered by HM 365 Universal drive and brake unit
[4] water tank with sight glass
[5] determination of the flow rate with the electromagnetic flow rate sensor
[6] digital display of flow rate, pressure and temperature
[7] GUNT software for data acquisition via USB under Windows 7, 8.1, 10

Technical data

Pump
- output: 1000W at 1000min^{-1}
- max. flow rate: 700L/min
- max. head: 1,75m

Tank: 160L

Measuring ranges
- flow rate: 0...1200L/min
- temperature: 0...100°C
- pressure (inlet): ±1bar
- pressure (outlet): 0...0,6bar

230V, 50Hz, 1 phase
230V, 60Hz, 1 phase; 120V, 60Hz, 1 phase
UL/CSA optional
LxWxH: 1110x800x1380mm
Weight: approx. 154kg

Scope of delivery

1 trainer
1 measuring amplifier
1 GUNT software CD + USB cable
1 set of instructional material

HM 405
Axial-flow turbomachines

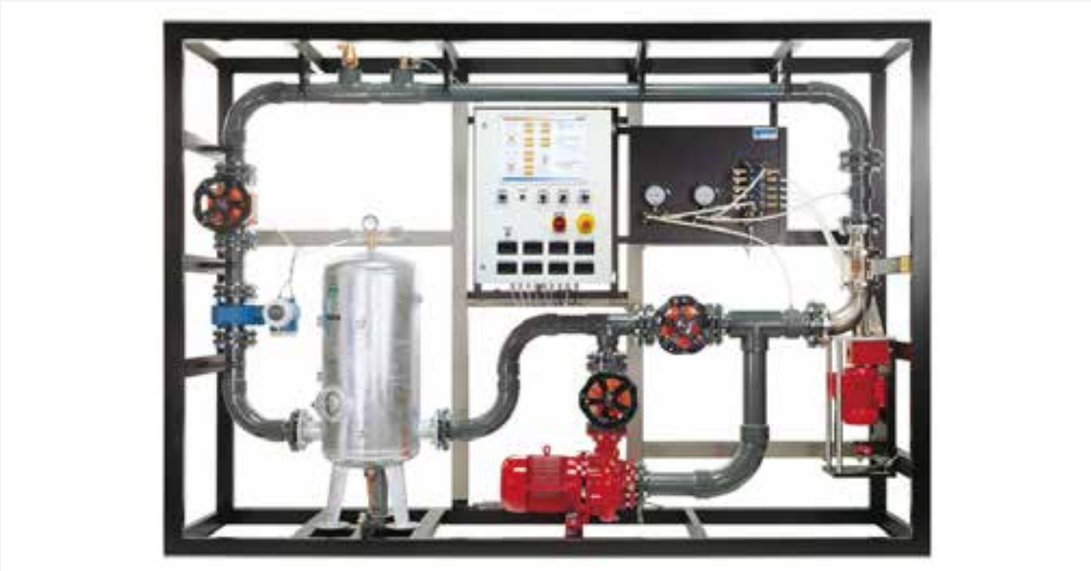

Description

- **investigation of a single-stage axial turbomachine**
- **can be operated as pump or turbine by changing rotor, impeller and stator, guide vane system**
- **probe to determine flow conditions at inlet and outlet of rotor, impeller and stator, guide vane system**
- **transparent working area**

The core piece of the experimental plant is the axial turbomachine with attached asynchronous motor. It can be operated either as a pump or turbine. To this end, different rotors, impellers and stators, guide vane systems are used. Included in the scope of delivery are four rotors, impellers and four stators, guide vane systems supplied with different blade, vane angles. The experimental plant contains a closed water circuit with expansion tank and centrifugal pump. The compressed-air powered expansion tank allows the turbomachine to be converted without loss of water.

The asynchronous motor functions during turbine operation as a generator, and during pump operation as a drive. A powerful pump generates flow and pressure during turbine operation. The power that is generated by the turbine is fed into this pump.

The transparent housing allows a full view of the rotor, impeller and stator, guide vane system and flow processes. The 3-hole probe can be used to measure the direction and velocity in the flow field directly upstream of, between, and downstream of rotor, impeller and stator, guide vane system. These values are used to record the velocity triangles for the blade, vane shapes.

Operation under different pressure levels is possible in order to study cavitation.

The speed is detected contact-free by means of an inductive displacement sensor on the motor shaft. To determine the drive power, the asynchronous motor is mounted on swivel bearings and equipped with a force sensor to measure the drive torque. Manometers measure the pressures at inlet and outlet. Pressure sensors measure the differential pressures at rotor, impeller and stator, guide vane system. The flow rate is measured by an electromagnetic flow meter. The measured values are read from digital displays.

Learning objectives/experiments

- recording characteristic curves
- determining dimensionless characteristics
- velocity triangles and pressure curves
- investigation of energy conversion within the turbomachine
- how blade, vane shape affects power and efficiency
- determining the outlet angular momentum and its effect on the power
- cavitation effects

HM 405
Axial-flow turbomachines

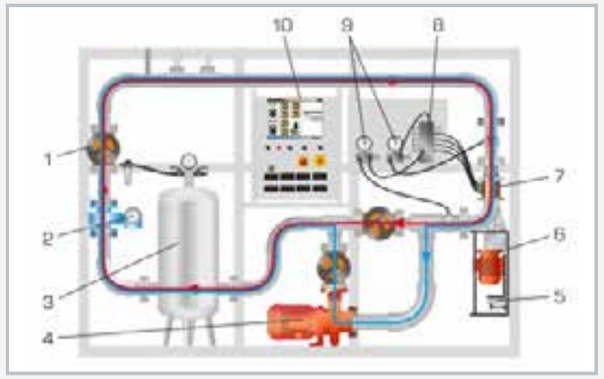

1 valve for adjusting the flow, 2 flow meter, 3 expansion tank with air cushion, 4 centrifugal pump for turbine mode, 5 force sensor for measuring the torque, 6 asynchronous motor, 7 axial-flow turbomachine, 8 differential pressure sensor, 9 manometer, 10 switch cabinet; red: pump mode, blue: turbine mode

The illustration shows cavitation effects in the working area of the axial flow turbomachine

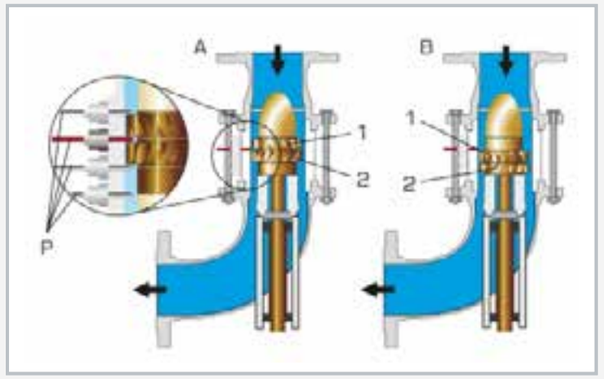

A: axial flow turbomachine as a turbine, 1 stator, 2 rotor;
B: axial flow turbomachine as a pump, 1 impeller, 2 guide vane system;
P pressure sensor

Specification

[1] investigation of an axial flow turbomachine
[2] closed water circuit with expansion tank and centrifugal pump
[3] turbomachine may be operated as a turbine and as a pump
[4] two sets of impellers and guide vane systems for pump mode and two sets of rotors and stators for turbine mode with different inlet and outlet angles
[5] asynchronous motor with 4-quadrant operation via frequency converter
[6] recovery of the brake energy
[7] motor with pendulum bearing, torque measurement via lever arm and force sensor
[8] inductive speed sensor on the motor
[9] manometers for measuring the inlet and outlet pressures
[10] measuring probe and differential pressure sensor for recording the pressure curve in the turbomachine
[11] electromagnetic flow meter
[12] display of power consumption, torque, speed, pressure, differential pressure and flow rate

Technical data

Centrifugal pump
- power: 5,5kW
- max. flow rate: 150m^3/h
- max. head: 10m

Asynchronous motor
- power: 1,5kW
- torque: 0...5Nm
- speed: 0...3000min^{-1}

Expansion tank: 150L

Measuring ranges
- pressure (manometer): 2x -1...5bar
- differential pressure: 5x 0...500mbar
- flow rate: 0...100m^3/h
- speed: 0...3000min^{-1}
- torque: 0...9,81Nm

400V, 50Hz, 3 phases
LxWxH: 3300x750x2300mm
Weight: approx. 620kg

Required for operation

compressed air connection: 3...10bar

Scope of delivery

1 experimental plant
4 rotors
4 distributors / guide vanes
1 set of accessories
1 set of instructional material

Basic knowledge

Positive displacement pumps

Fundamental principles of positive displacement pumps

In positive displacement pumps the energy is transferred to the fluid hydrostatically. In the hydrostatic transfer of energy a displacement body reduces a working chamber filled with fluid and pumps the fluid into the pipe. In this case, the displacement body applies a pressure to the fluid. When the working chamber expands it is refilled with fluid from the pipe.

The work done W_s results from the product of the displacement force **F** and displacement distance s. This equation can also be written as the product of displaced volume V_s and delivery pressure **p**.

$$W_s = F \cdot s = A \cdot p \cdot s = V_s \cdot p$$

The power **P** transferred to the fluid is calculated from the flow rate **Q** and delivery pressure **p**.

$$P = Q \cdot p$$

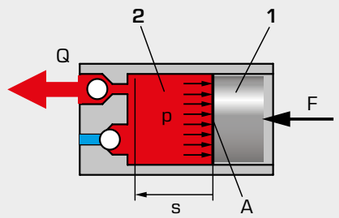

1 displacement body, **2** working chamber;
Q flow rate, **F** displacing force, **A** area, **p** delivery pressure,
s displacement distance

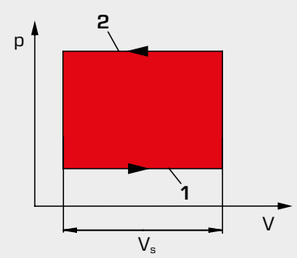

Representation of the pump process of a positive displacement pump in the p,V diagram.

During suction **1** the volume increases at low pressure.
Pushing out **2** occurs as the volume reduces at high pressure.
The enclosed area corresponds to the work done on the fluid.

Advantages of positive displacement pumps

- flow rate only slightly dependent on the head; thus well suited for dosing and injection pumps
- suitable for high pressures; only one stage required
- very good suction capacity, even with gas content
- suitable for high viscosity (pastes)
- flow rate can be adjusted very precisely and reproducibly via stroke and stroke rate
- cyclical delivery possible
- well suited for low drive speeds
- direct pneumatic, hydraulic or electromagnetic drive possible with oscillating pumps

Disadvantages of positive displacement pumps

- principle of operation does not include a pressure restriction, therefore safety or pressure relief valves are necessary
- in oscillating positive displacement pumps vibration-free operation is only possible with complex mass balancing
- oscillating positive displacement pumps less suitable for high speeds
- in oscillating positive displacement pumps, pulsating flow is necessary, as is a pulsation dampener
- in some more complicated designs, fault-prone construction with valves
- larger number of wear parts than centrifugal pumps

Types of positive displacement pumps

In positive displacement pumps a distinction is made between **oscillating** and **rotary pumps**.

Examples of oscillating positive displacement pumps

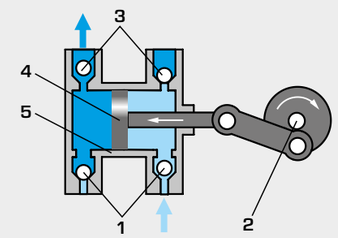

Piston pump

Structure of oscillating positive displacement pumps

1 suction valve,
2 crank mechanism,
3 pressure valve,
4 piston,
5 cylinder,
6 diaphragm,
7 eccentric mechanism

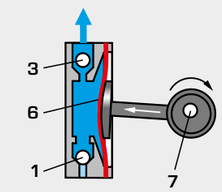

Diaphragm pump

Examples of rotary positive displacement pumps

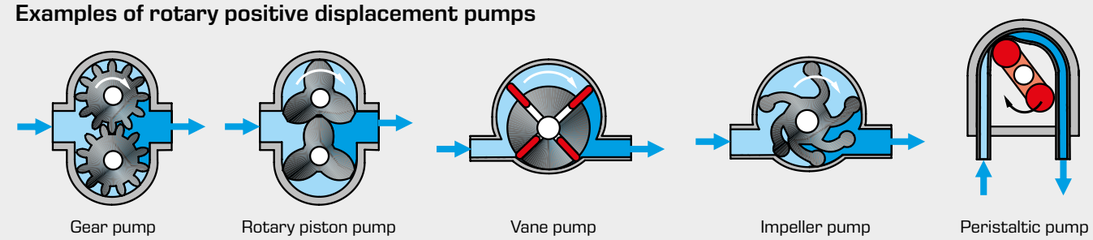

Since rotary positive displacement pumps usually have large working chambers that are filled and emptied in overlap, these pumps deliver more evenly than oscillating positive displacement pumps with only smaller working chambers. The rotating displacement bodies mean the pumps have good mass balancing and low vibrations even when running at higher speeds.

For applications where a pulsed delivery is desired, such as in fuel injection pumps for engines, only oscillating positive displacement pumps are suitable. Oscillating positive displacement pumps generally have a more complicated design because the rotating drive must be converted into an oscillating stroke movement. This is done via a crank, eccentric or cam mechanism. In addition, at least one pressure control valve is necessary to prevent backflow of the fluid.

Operating behaviour and operating points of a positive displacement pump

Positive displacement pumps have very steep characteristics. The flow rate **Q** is almost independent of the head **H**. The maximum head H_{max} is usually limited by a pressure relief valve or safety valve. Therefore, the flow rate is almost independent of the system characteristic. In contrast to centrifugal pumps, the flow rate cannot be regulated by increasing the system resistance. This is realised by a change in the rotational speed (n_1-n_3) or the displaced volume. The black curves represent the system characteristics at different speeds **1...3**.

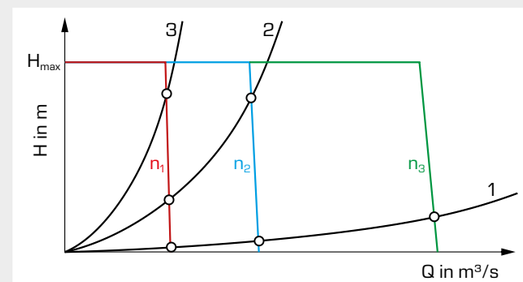

HM 285
Experiments with a piston pump

Description

- **illustrative model of a typical positive displacement pump**
- **closed water circuit**
- **GUNT software for data acquisition, visualisation and operation**
- **part of the GUNT-Labline fluid energy machines**

Piston pumps belong to the group of positive displacement pumps. They transport the medium by a reciprocating motion of a piston in the pump working space, called stroke. The stroke creates a suction hence vacuum effect used to deliver the water. Piston pumps are used when high pressures are to be generated. The flow rate of piston pumps is independent of the head and is determined only by speed. Its good suction performance is outstanding.

The experimental unit provides the basic experiments to get to know the operating behaviour and the important characteristic variables of piston pumps.

HM 285 features a closed water circuit with water tank, a piston pump with variable speed via a frequency converter and an air vessel.

The piston of the pump is mounted in a transparent housing and can be observed during operation. The cycle that takes place (intake and discharge of water) can be shown clearly in the p-V diagram. The pulsating pressure curve of the pump can be damped with the aid of the air vessel. Flow rate and head are adjusted via a needle valve and overflow valve.

The experimental unit is fitted with sensors for pressure and flow rate. One pressure sensor measures the pressure at the outlet of the pump, another one measures the pressure in the inside of the cylinder. The position of the piston rod is measured by an angle sensor. This allows the determination of the cylinder volume. The microprocessor-based measuring technique is well protected in the housing. The measured values are transmitted directly to a PC via USB where they can be analysed using the software included.

All the advantages of software-supported experiments with operation and evaluation are offered by the GUNT software and the microprocessor.

Learning objectives/experiments

- principle of operation of a piston pump
- recording of pump characteristics
- pressure curves of delivery pressure and cylinder pressure
- influence of pulsation damping
- p-V diagram
- determination of efficiencies

HM 285
Experiments with a piston pump

1 overflow valve, 2 pressure sensor at outlet, 3 water tank, 4 air vessel, 5 piston pump, 6 motor, 7 flow meter, 8 needle valve for adjusting the flow rate

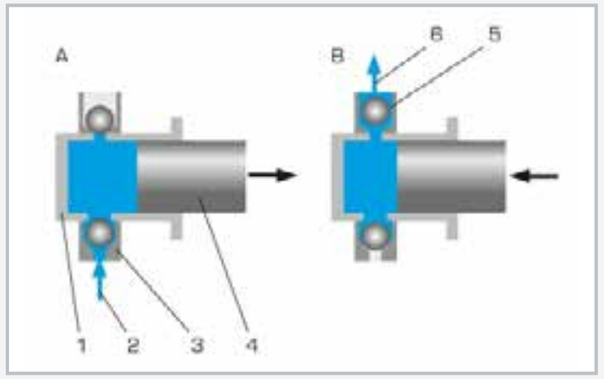

Principle of operation of a piston pump: A intake, B discharge
1 cylinder, 2 water inlet, 3 valve at inlet, 4 plunger piston, 5 valve at outlet, 6 water outlet

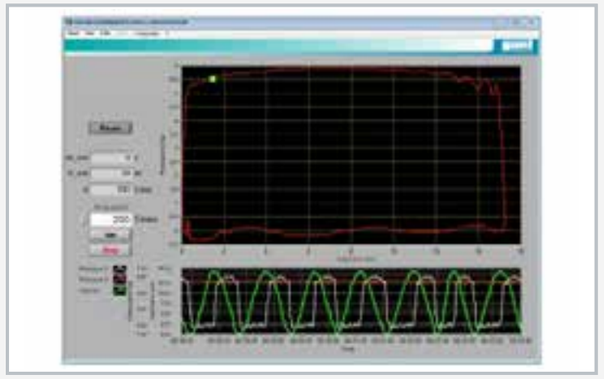

Operating interface of the powerful software

Specification

[1] functioning and operating behaviour of a piston pump
[2] closed water circuit contains piston pump with variable speed via frequency converter, transparent water tank and air vessel
[3] transparent housing for observing the pump piston
[4] needle valve for adjusting the flow rate
[5] overflow valve for adjusting the head
[6] pulsation damping of the head using air vessel with bleed valve
[7] sensors for pressure at outlet and in the cylinder of the pump, flow rate and crank angle
[8] due to integrated microprocessor-based instrumentation no additional devices with error-prone wiring are required
[9] display and evaluation of the measured values as well as operation of the unit via software
[10] GUNT software with control functions and data acquisition via USB under Windows 7, 8.1, 10

Technical data

Piston pump
- speed: 30...180min^{-1}
- max. flow rate: 135L/h
- max. head: 40m

Drive motor
- power: 180W

Gear transmission ratio: i=7,5
Overflow valve: 1...4bar

Measuring ranges
- pressure (cylinder): 0...5bar
- pressure (outlet): 0...5bar
- crank angle: 0...360°
- flow rate: 0,2...6L/min

230V, 50Hz, 1 phase
230V, 60Hz, 1 phase; 120V, 60Hz, 1 phase
UL/CSA optional
LxWxH: 670x590x740mm
Weight: approx. 49kg

Required for operation

PC with Windows

Scope of delivery

1 experimental unit
1 GUNT software CD + USB cable
1 set of instructional material

HM 286
Experiments with a gear pump

Description

- **illustrative model of a gear pump**
- **closed oil circuit**
- **GUNT software for data acquisition, visualisation and operation**
- **part of the GUNT-Labline fluid energy machines**

Gear pumps belong to the group of positive displacement pumps with a continuous flow. Two counter-rotating gears transport the medium. The transported medium is between the housing and the tooth spaces. The pulsation-free flow increases linearly with speed. These pumps are particularly suitable for the generation of medium-high pressure at low flow rates.

The experimental unit provides the basic experiments to get to know the operating behaviour and the most important characteristic variables of gear pumps.

HM 286 features a closed circuit with a tank and a gear pump with variable speed via frequency converter. The pump gears are mounted in a transparent housing and can be observed during operation.

Flow rate and head are adjusted via a needle valve and an overflow valve. Oil is used as the medium.

The experimental unit is fitted with sensors for pressure and temperature. The oval wheel meter is especially used for the accurate flow measurement of viscous liquids. Oval wheel meters operate on the positive displacement principle with two precise oval gear wheels. The microprocessor-based measuring technique is well protected in the housing. The measured values are transmitted directly to a PC via USB where they can be analysed using the software included.

All the advantages of software-supported experiments with operation and evaluation are offered by the GUNT software and the microprocessor.

Learning objectives/experiments

- principle of operation of a gear pump
- recording of pump characteristics
- relationship between head and speed
- effect of pressure limitation
- determination of efficiencies

HM 286
Experiments with a gear pump

1 tank, 2 flow meter (oval wheel meter), 3 needle valve, 4 pressure sensor at outlet, 5 pressure sensor at inlet, 6 gear pump, 7 drive, 8 overflow valve for adjusting the head

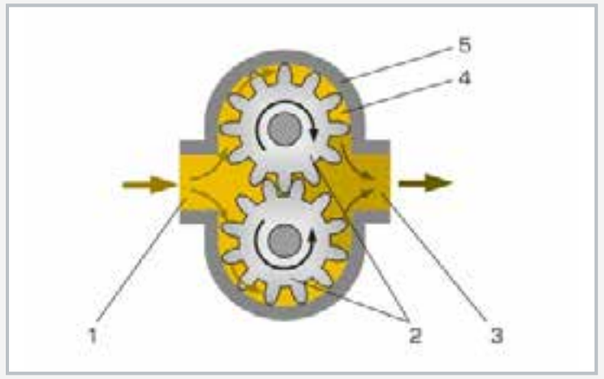

Principle of operation of a gear pump
1 oil inlet, 2 gears, 3 oil outlet, 4 tooth spaces as pumping chamber, 5 housing

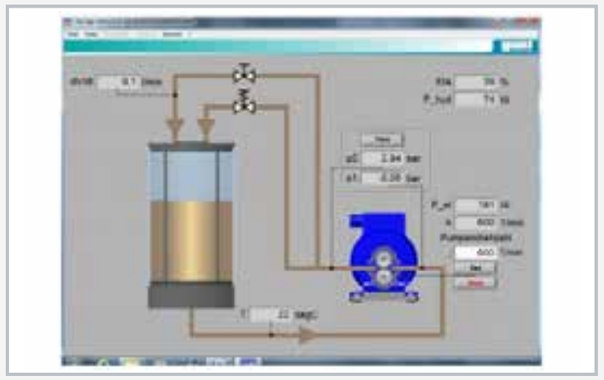

Operating interface of the powerful software

Specification

[1] functioning and operating behaviour of a gear pump
[2] closed oil circuit contains a gear pump with variable speed via frequency converter and a transparent tank
[3] transparent housing for observing the pump gears
[4] needle valve for adjusting the flow rate
[5] overflow valve for adjusting the head
[6] sensors for temperature and pressure at inlet and outlet of the pump
[7] oval wheel meter as flow sensor
[8] due to integrated microprocessor-based instrumentation no additional devices with error-prone wiring are required
[9] display and evaluation of the measured values as well as operation of the unit via software
[10] GUNT software with control functions and data acquisition via USB under Windows 7, 8.1, 10

Technical data

Gear pump with speed-controlled drive
- power consumption: 370W
- nominal speed: 200...1000min^{-1}
- max. flow rate: approx. 15cm^3 per revolution
- max. head: approx. 100m

Overflow valve: 0...5,5bar

Measuring ranges
- pressure (inlet): ±1bar
- pressure (outlet): 0...5bar
- flow rate: 0...25L/min
- temperature: 0...100°C

230V, 50Hz, 1 phase
230V, 60Hz, 1 phase; 120V, 60Hz, 1 phase
UL/CSA optional
LxWxH: 670x590x750mm
Weight: approx. 50kg

Required for operation

PC with Windows

Scope of delivery

1 experimental unit
1 oil 5L (ISO VG 100)
1 GUNT software CD + USB cable
1 set of instructional material

GUNT-FEMLine
Water pump training part 2 positive displacement pumps

The HM 365.10 Supply unit for water pumps from GUNT is a trainer for studying the properties of different water pumps under realistic operating conditions. Some of the pumps are powerful industrial pumps. Combined with the drive unit HM 365 and the different pump units, the supply unit HM 365.10 is an ideal pump trainer.

HM 365.10
Supply unit for water pumps

2nd part | Positive displacement pumps as water pumps:

Lobe pump

In a lobe pump two non-contact pistons rotate in two cylindrical chambers. With each revolution, they deliver the same volume. Lobe pumps are used for delivering highly viscous and highly abrasive media.

HM 365.16 Lobe pump

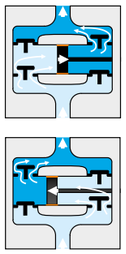

Reciprocating piston pump

The most simple type of reciprocating piston pump consists of a piston moving in a cylinder with one inlet and one outlet valve. Depending on the internal cylinder pressure, the valves open the inlet and outlet to the stroke chamber.

HM 365.17 Reciprocating piston pump

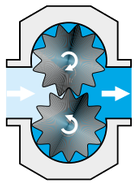

Gear pump

Essentially, gear pumps consist of three components: a housing with an inlet and outlet for the fluid and two gears, one of which powers the other one. Gear pumps differ depending on their internal design. The most common gear pump, the external gear pump, is used here as an example.

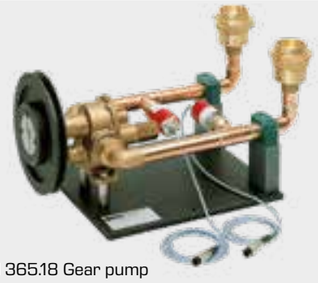

HM 365.18 Gear pump

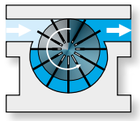

Vane pump

Vane pumps are also known as rotary vane pumps. They can be used for both liquid and gaseous media. There are vane pumps with constant displacement volumes and with adjustable displacement volumes. The pump consists of a housing, in which an eccentric cylindrical rotor rotates. Rotary vanes are spring-mounted to radial guides inside the rotor. During operation, the spring-force ensures that the rotary vanes run along the inner wall of the housing and an enclosed space is formed between them. The pumping medium is transported between the rotary vanes and the housing wall.

HM 365.19 Vane pump

Sectional models and assembly training

HM 700.20 Cutaway model: piston pump

To complete the water pump training, GUNT offers **sectional models and assembly and maintenance training** for different positive displacement pumps: Please refer to catalogue 4 for more information on these devices.

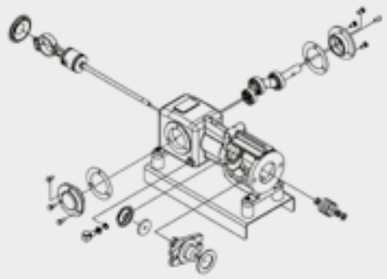

Exploded drawing of the piston pump

MT 184 Assembly & maintenance exercise: piston pump

HM 365.16
Lobe pump

Learning objectives/experiments

- in combination with HM 365 and HM 365.10
  - recording of pump characteristics, system characteristics, operating point
  - power requirement, hydraulic power, pump efficiency

Specification

[1] investigation of a lobe pump
[2] operation with HM 365.10 Supply Unit for Water Pumps
[3] powered by HM 365 Universal Drive and Brake Unit
[4] pressure sensors at the inlet and outlet of the pump
[5] pressure display on the display unit of HM 365.10

Technical data

Lobe pump
- max. flow rate: 1.8m^3/h
- max. head: 120m
- transmission ratio: 1:2
- nominal speed: 1450min^{-1}

LxWxH: 660x360x310mm
Weight: approx. 25kg

Scope of delivery

1 lobe pump

Description

- **investigation of the pumping behaviour of a lobe pump**
- **part of the GUNT-FEMLine**

In contrast to rotodynamic pumps, a positive displacement pump moves the medium by means of closed conveying chambers. In a lobe pump two non-contact pistons rotate in two cylindrical chambers. With each revolution, they deliver the same volume. Lobe pumps are used for delivering highly viscous and highly abrasive media.

HM 365.16 is a lobe pump that is delivered ready for installation, mounted on a plate. The pump is installed in the HM 365.10 supply unit with just a few simple steps and connected via hoses with quick-release couplings and attached with clamping levers. The pump has an internal bypass that opens if the pressure is too high and releases pressure to the low pressure side. For power supply, the pump is connected to the drive unit HM 365 with a V-belt. The pump speed is reduced by the transmission ratio of the belt.

The pressures at the inlet and outlet of the lobe pump are recorded with sensors. The measured values are read from digital displays on the supply unit and can be transmitted simultaneously via USB directly to a PC, where they can be analysed using the included software.

HM 365.17
Reciprocating piston pump

Learning objectives/experiments

- in combination with HM 365 and HM 365.10
  - recording of pump characteristics, system characteristics and operating point
  - power requirement, hydraulic power, pump efficiency

Specification

[1] investigation of a lobe pump
[2] operation with HM 365.10 Supply Unit for Water Pumps
[3] powered by HM 365 Universal Drive and Brake Unit
[4] pressure sensors at the inlet and outlet of the pump
[5] pressure display on the display unit of HM 365.10

Technical data

reciprocating piston pump
- maximum flow rate: 1,5m^3/h
- maximum head 60m
- number of strokes: 337min^{-1}
- total transmission ratio: 1:6,88

LxWxH: 690x500x410mm
Weight: approx. 24kg

Scope of delivery

1 reciprocating piston pump

Description

- **investigation of the pumping behaviour of a reciprocating piston pump**
- **part of the GUNT-FEMLine**

Piston pumps are part of the group of positive displacement pumps. The most simple type of reciprocating piston pump consists of a piston that moves in a cylinder with one inlet and one outlet valve. Depending on the internal cylinder pressure, the valves open the inlet and outlet to the stroke chamber.

HM 365.17 is a reciprocating piston pump that is delivered ready for installation, mounted on a plate. The pump is installed in the HM 365.10 supply unit with just a few simple steps, connected via hoses with quick-release couplings, and attached with clamping levers. The pump has an internal bypass that opens if the pressure is too high and releases pressure to the low pressure side. The pump is connected to the HM 365 Universal Drive and Brake Unit with a V-belt. The pump speed is reduced by the transmission ratio of the belt.

The pressures at the inlet and outlet of the reciprocating piston pump are recorded by sensors. The measured values are read from digital displays on the supply unit and can be transmitted simultaneously via USB directly to a PC, where they can be analysed using the included software.

HM 365.18
Gear pump

Learning objectives/experiments

- in combination with HM 365 and HM 365.10
  - recording of pump characteristics, system characteristics and operating point
  - power requirement, hydraulic power, pump efficiency

Specification

[1] investigation of a gear pump
[2] operation with HM 365.10 Supply Unit for Water Pumps
[3] powered by HM 365 Universal Drive and Brake Unit
[4] pressure sensors at the inlet and outlet of the pump
[5] pressure display on the display unit of HM 365.10

Technical data

Gear pump
- max. flow rate: 4,2m^3/h
- max. head: 70m
- nominal speed: 1700min^{-1}
- transmission ratio: 1:1,6

LxWxH: 570x300x315mm
Weight: approx. 17kg

Scope of delivery

1 gear pump

Description

- **onvestigation of the pumping behaviour of a gear pump**
- **part of the GUNT-FEMLine**

A gear pump is characterised by a steady flow rate. Its compact structural shape allows for a small housing. We distinguish between external and internal gear pumps. The external gear pump consists of a housing in which two gears rotate in opposite directions, transporting the pumping medium between the gears and the housing.

HM 365.18 is an external gear pump that is delivered ready for installation, mounted on a plate. The pump is installed in the HM 365.10 supply unit with just a few simple steps, connected via hoses with quick-release couplings, and attached with clamping levers. The pump has an internal bypass that opens if the pressure is too high and releases pressure to the low pressure side. For power supply, the pump is connected to the drive unit HM 365 with a V-belt. The pump speed is reduced by the transmission ratio of the belt.

The pressures at the inlet and outlet of the gear pump are recorded with sensors. The measured values are read from digital displays on the supply unit and can be transmitted simultaneously via USB directly to a PC, where they can be analysed using the included software.

HM 365.19
Vane pump

Learning objectives/experiments

- in combination with HM 365 and HM 365.10
  - recording of pump characteristics, system characteristics and operating point
  - power requirement, hydraulic power, pump efficiency

Specification

[1] investigation of a vane pump
[2] operation with HM 365.10 Supply Unit for Water Pumps
[3] powered by HM 365 Universal Drive and Brake Unit
[4] pressure sensors at the inlet and outlet of the pump
[5] pressure display on the display unit of HM 365.10

Technical data

Vane pump
- max. flow rate: 7,2m^3/h
- max. head: 70m
- nominal speed: 1400min^{-1}
- transmission ratio: 1:1,44

LxWxH: 500x350x300mm
Weight: approx. 18kg

Scope of delivery

1 vane pump

Description

- **investigation of the pumping behaviour of a vane pump**
- **part of the GUNT-FEMLine**

The vane pump is part of the group of positive displacement pumps. It consists of a housing, in which an eccentrically installed cylinder rotates. Rotary vanes are spring-mounted to radial guides inside the rotating cylinder. During operation, the spring-force ensures that the rotary vanes run along the inner wall of the housing, and an enclosed space is formed between them. The pumping medium is transported between the rotary vanes and the housing wall. Vane pumps are used where high delivery pressures are required.

HM 365.19 is a vane pump that is delivered ready for installation, mounted on a plate. The pump is installed in the HM 365.10 supply unit with just a few simple steps, connected via hoses with quick-release couplings, and attached with clamping levers. The pump has an internal bypass that opens if the pressure is too high and releases pressure to the low pressure side. For power supply, the pump is connected to the drive unit HM 365 with a V-belt.

The pressures at the inlet and outlet of the vane pump are recorded by sensors. The measured values are read from digital displays on the supply unit and can be transmitted simultaneously via USB directly to a PC, where they can be analysed using the included software.

GUNT-FEMLine
Oil pump training

Oil pumps are driven machines. The selection of the correct oil pump mainly depends on the viscosity or, its inverse, the fluidity of the oil. In refineries centrifugal pumps are used to deliver large volumes of thin or low viscosity oils, such as petroleum. Oils with a higher viscosity are transported with positive displacement pumps. Moreover, oil pumps are used to perform mechanical work and for lubrication and cooling purposes. In hydraulic systems, oil is used to transmit forces. The pumps that are needed for this purpose must be able to achieve high pressures in order to generate large lifting or forming forces. They are, for example, used in lifting platforms or metal presses.

This training course deals with oil pumps that transport oil with the help of enclosed volumes according to the positive displacement principle. Depending on requirements and demand, different oil pump designs are used. The most commonly used oil pumps are **gear pumps**. Essentially, gear pumps consist of the following components: a housing with an inlet and outlet for the oil and two gears, one of which powers the other one. Depending on their internal design, gear pumps are categorised as follows:

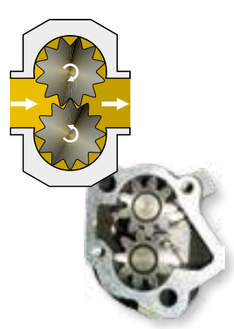

External gear pump

In an external gear pump, two gears rotate in opposite directions in a housing. The pumping medium is transported between the gears and the housing. Due to their simple, robust setup these pumps are relatively cost-efficient. External gear pumps are very common in the automobile industry.

HM 365.22
External gear pump

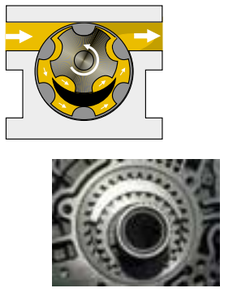

Internal gear pump

Internal gear pumps are also known as crescent pumps. They are characterised by their low pulsation, high efficiency, low level of noise and medium-high operating pressures. An internal gear drives an external toothed ring. Since the driving gear is mounted on an eccentric bearing, clearances result in the gaps between the gear and the toothed ring. These clearances form the delivery volume. A crescent-shaped seal between the gear and the ring forms the enclosed volume that is necessary to reach the required pressure.

HM 365.24
Internal gear pump

Toothed ring pump

Toothed ring pumps are also known as Eaton pumps or gerotor pumps. The internal gear runs eccentrically along the internal gearing of the toothed ring and powers this ring. The volume of the displacement chamber between the gaps changes, and thereby allows the pumping medium to be transported.

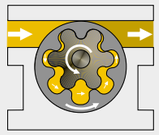

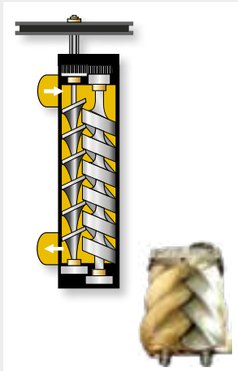

Screw pump

Screw pumps are able to provide continuous delivery of even viscous media without pulsation or turbulence. Their pump housing contains two or more rotors that rotate in opposite directions, with an external screw thread profile. As the threads of the screws engage, the fluid is transported. Depending on the thread pitch, very high pressures can be achieved. Screw pumps run very smoothly, which is why they are often used in lifts and as fuel pumps in oil burners.

HM 365.21
Screw pump

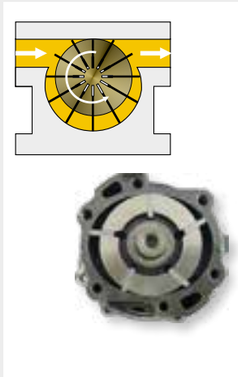

Vane pump

Vane pumps are also known as rotary vane pumps. They can be used for both liquid and gaseous media. In some vane pumps, the displacement volume is adjustable. These pumps consist of a housing, in which an eccentrically installed cylinder rotates (rotor). Rotary vanes are spring-mounted to radial guides inside the rotor. During operation, the spring-force ensures that the rotary vanes run along the inner wall of the housing and an enclosed space is formed between them. The pumping medium is transported between the rotary vanes and the housing wall.

HM 365.23
Vane pump

Sectional models and assembly training

To complete the oil pump training, GUNT offers **sectional models and assembly and maintenance training** for different positive displacement pumps: Please refer to catalogue 4 for more information on these devices.

HM 700.22 Cutaway model: gear pump

MT 186 Assembly & maintenance exercise: gear pump

HM 365.20
Oil pump supply unit

Description

- **closed oil circuit for supplying the oil pumps**
- **GUNT software for data recording and visualisation**
- **part of the GUNT-FEMLine**

Oil pumps are driven machines. Depending on the viscosity of the oil they work either according to the positive displacement principle for for high viscosity oils, or as rotodynamic pumps for low viscosity oils. Oil pumps are used to deliver oil required in machines or plants for the purpose of lubrication or cooling. Another area of application is the use of oil to transfer energy in the field of hydraulics.

The supply unit HM 365.20 provides the working medium oil for several oil pumps (HM 365.21 to HM 365.24). The pumps are powered by the drive unit HM 365.

The trainer includes a closed oil circuit with an internal oil tank. The individual pumps are placed on the work surface and connected via hoses. To power the pump, it is connected to the drive unit HM 365 with a V-belt. The supply unit is equipped with a closed-circuit air/oil cooling system that cools the oil.

The flow rate is measured with an oval wheel flow meter. A temperature sensor records the temperature in the piping system. The trainer has pressure sensors to measure the inlet and outlet pressures. The measured values are read from digital displays on the supply unit and can be transmitted simultaneously via USB directly to a PC, where they can be analysed using the included software.

Learning objectives/experiments

- in combination with HM 365 and a pump of the series HM 365.21 – HM 365.24
  - recording of pump characteristics
  - determination of the power requirement of the pump
  - determination of the hydraulic power of the pump
  - determination of the pump efficiency
  - determination of the system characteristics and the operating point of the pump

HM 365.20
Oil pump supply unit

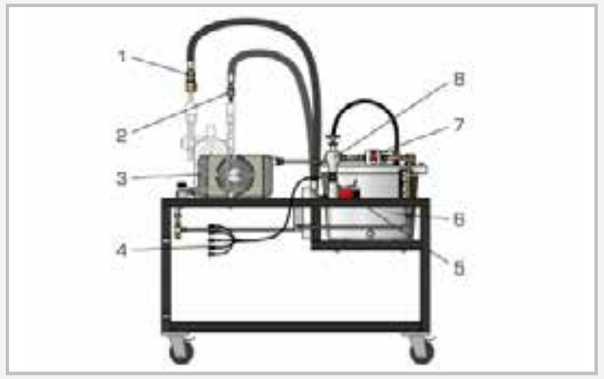

1 inlet, 2 outlet, 3 closed-circuit cooling system (air/oil), 4 connections for display unit, 5 pressure sensor, 6 oil tank, 7 oval wheel flow meter, 8 adjustable pressure valve

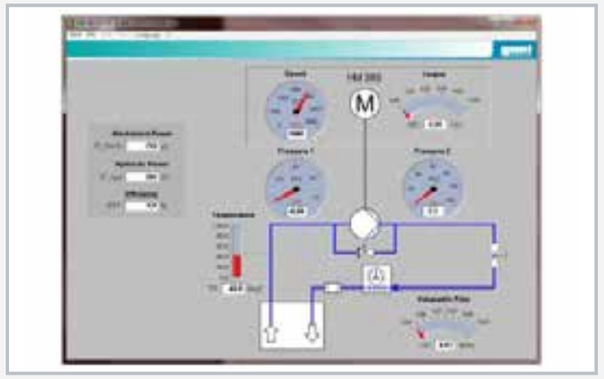

GUNT software screenshot: process schematic

Functional experimental setup: drive unit HM 365 (left), HM 365.20 with pump under investigation (right)

Specification

[1] supply unit for operation of different oil pumps HM 365.21 to HM 365.24
[2] closed oil circuit
[3] connection of pumps via hydraulic hoses with quick-release couplings
[4] pressure sensors at the inlet and outlet included in the scope of delivery of the pumps
[5] measurement of the oil temperature in the pipeline system with PT100
[6] closed-circuit cooling via air/oil heat exchanger
[7] flow measurement with oval wheel flow meter
[8] digital display of flow, pressure and temperature
[9] GUNT software for data acquisition via USB under Windows 7, 8.1, 10

Technical data

Oil container: 27L
Oil: HLP-ISO 32
Oil cooling 2...3kW

Measuring ranges
pressure (inlet): ±1bar
pressure (outlet): 0...120bar
temperature: 0...1000°C
flow rate: 0...10L/min

230V, 50Hz, 1 phase
230V, 60Hz, 1 phase
120V, 60Hz, 1 phase
LxWxH: 1200x850x1300mm
Weight: approx. 80kg

Required for operation

PC with Windows recommended

Scope of delivery

1 supply unit
1 display unit
1 CD with GUNT software + USB cable
2 hoses with quick-release couplings
1 set of instructional material

HM 365.21
Screw pump

Learning objectives/experiments

- in combination with HM 365 and HM 365.20
  - recording of pump and system characteristics, operating point
  - power requirement, hydraulic power, pump efficiency

Specification

[1] investigation of a screw pump
[2] operation with HM 365.20 Oil Pump Supply Unit
[3] powered by HM 365 Universal Drive and Brake Unit
[4] Safety valve protects against overpressure in the system
[5] display of temperature, pressures and flow on the display unit of HM 365.20

Technical data

Screw pump
- flow rate per rotation: 3,1cm^3
- max. pressure: 40bar
- safety valve: 40bar
- permissible inlet pressure: -0,7...3bar
- max. speed: 3000min^{-1}

LxWxH: 380x250x330mm
Weight: approx. 12kg

Scope of delivery

1 screw pump

Description

- **investigation of the pumping behaviour of a screw pump**
- **part of the GUNT-FEMLine**

Screw pumps are positive displacement pumps. They are able to provide continuous delivery of even viscous media without pulsation or turbulence. Their pump housing contains two or more rotors that rotate in opposite directions with an external screw thread profile. As the threads of the screws engage, the fluid is transported. Depending on the thread pitch, very high pressures can be achieved. Screw pumps run very smoothly, which is why they are often used in lifts and as fuel pumps in oil burners.

HM 365.21 is a screw pump that is delivered ready for installation, mounted on a plate. The pump is installed in the supply unit HM 365.20 with just a few simple steps and connected via hydraulic hoses. A safety valve protects the pump against positive pressure. If the pressure becomes too high, a bypass is opened and the pressure is released to the low pressure side. For power supply, the pump is connected to the drive unit HM 365 with a V-belt.

The pressure, temperature, and flow sensors are located in the closed oil circuit of supply unit HM 365.20. The measured values are read from digital displays on the supply unit and can be transmitted simultaneously via USB directly to a PC, where they can be analysed using the included software.

HM 365.22
External gear pump

Learning objectives/experiments

- in combination with HM 365 and HM 365.20
  - recording of pump and system characteristics, operating point
  - power requirement, hydraulic power, pump efficiency

Specification

[1] investigation of an external gear pump
[2] operation with HM 365.20 Oil Pump Supply Unit
[3] powered by HM 365 Universal Drive and Brake Unit
[4] safety valve protects against overpressure in the system
[5] display of temperature, pressures and flow rate on the display unit of HM 365.20

Technical data

External gear pump
- flow rate per rotation: 2cm^3
- max. pressure: 210bar
- safety valve 110bar
- nominal speed: 3000min^{-1}

LxWxH: 460x250x280mm
Weight: approx. ca. 15kg

Scope of delivery

1 external gear pump

Description

- **investigation of the pumping behaviour of an external gear pump**
- **part of the GUNT-FEMLine**

Gear pumps are often used as oil pumps in motor vehicles. In an external gear pump, two gears rotate in opposite directions in a housing. The pumping medium is transported between the gears and the housing.

HM 365.22 is an external gear pump that is delivered ready for installation, mounted on a plate. The pump is installed in the supply unit HM 365.20 with just a few simple steps and connected via hydraulic hoses. A safety valve protects the pump against positive pressure. If the pressure becomes too high, a bypass is opened and the pressure is released to the low pressure side. For power supply, the pump is connected to the drive unit HM 365 with a V-belt.

The pressure, temperature, and flow sensors are located in the closed oil circuit of supply unit HM 365.20. The measured values are read from digital displays on the supply unit and can be transmitted simultaneously via USB directly to a PC, where they can be analysed using the included software.

HM 365.23
Vane pump

Learning objectives/experiments

- in combination with HM 365 and HM 365.20
  - recording of pump characteristics, system characteristics and operating point
  - power requirement, hydraulic power, pump efficiency

Specification

[1] investigation of a vane pump
[2] operation with HM 365.20 Oil Pump Supply Unit
[3] powered by HM 365 Universal Drive and Brake Unit
[4] safety valve protects against overpressure in the system
[5] display of temperature, pressures and flow on the display unit of HM 365.20

Technical data

Gear pump
- max. displacement volume: 10cm^3
- max. pressure: 100bar
- safety valve: 110bar
- nominal speed: 900...1500min^{-1}
- transmission ratio: 1:2

LxWxH: 450x300x420mm
Weight: approx. 15kg

Scope of delivery

1 vane pump

Description

- **investigation of the pumping behaviour of a vane pump**
- **part of the GUNT-FEMLine**

Vane pumps are designed with either constant displacement volumes or adjustable displacement volumes. These pumps consist of a housing, in which an eccentrically installed cylinder rotates (rotor). Rotary vanes are spring-mounted to radial guides inside the rotor. During operation, the spring-force ensures that the rotary vanes run along the inner wall of the housing and an enclosed space is formed between them. The pumping medium is transported between the rotary vanes and the housing wall.

HM 365.23 is a vane pump with adjustable displacement volume that is delivered ready for installation, mounted on a plate.

The pump is installed in the supply unit HM 365.20 with just a few simple steps and connected via hydraulic hoses. A safety valve protects the pump against positive pressure. If the pressure becomes too high, a bypass is opened and the pressure is released to the low pressure side. For power supply, the pump is connected to the drive unit HM 365 with a V-belt.

The pressure, temperature, and flow sensors are located in the closed oil circuit of supply unit HM 365.20. The measured values are read from digital displays on the supply unit and can be transmitted simultaneously via USB directly to a PC, where they can be analysed using the included software.

HM 365.24
Internal gear pump

Learning objectives/experiments

- in combination with HM 365 and HM 365.20
  - recording of pump characteristics, system characteristics and operating point
  - power requirement, hydraulic power, pump efficiency

Specification

[1] investigation of an internal gear pump
[2] operation with HM 365.20 Oil Pump Supply Unit
[3] powered by HM 365 Universal Drive and Brake Unit
[4] safety valve protects against overpressure in the system
[5] display of temperature, pressures and flow rate on the display unit of HM 365.20

Technical data

Internal gear pump
- flow rate per rotation: 1,7cm^3
- max. pressure: 180bar
- safety valve: 110bar
- nominal speed: 600...3000min^{-1}

LxWxH: 450x250x310mm
Weight: approx. 15kg

Scope of delivery

1 internal gear pump

Description

- **investigation of the pumping behaviour of an internal gear pump**
- **part of the GUNT-FEMLine**

Internal gear pumps, or crescent pumps, are characterised by their low pulsation, high efficiency, low level of noise, and high operating pressures. An internal gear drives an external toothed ring. Since the driving gear is mounted on an eccentric bearing, clearances result in the gaps between the gear and ring. These clearances form the delivery volume. A crescent-shaped seal between the gear and the ring forms the enclosed volume that is necessary to reach the required pressure.

HM 365.24 is an internal gear pump that is delivered ready for installation, mounted on a plate. The pump is installed in the supply unit HM 365.20 with just a few simple steps and connected via hydraulic hoses. A safety valve protects the pump against positive pressure. If the pressure is too high, an internal bypass is opened and the pressure is released to the low pressure side. For power supply, the pump is connected to the drive unit HM 365 with a V-belt.

The pressure, temperature, and flow sensors are located in the closed oil circuit of supply unit HM 365.20. The measured values are read from digital displays on the supply unit and can be transmitted simultaneously via USB directly to a PC, where they can be analysed using the included software.

Basic knowledge

Fans

Fundamental principles of fans

Fans are turbomachines that are used to convey gaseous fluids such as air. A characteristic of fans is the pressure ratio **Π**, which indicates the ratio of the absolute final pressure to the absolute intake pressure. Fans are different from compressors because of their low pressure ratio of max. 2,5. At very low pressures up to about 1,1 they are also known as ventilators.

In a fan the energy is transferred to the fluid via aerodynamic flow forces. In this process the fluid is accelerated by the fan's rotor. Therefore, the rotor of the fan has to move with high velocity and thus a high rotational speed. In this case, it can be said that the higher the pressure ratio, the higher the peripheral speed and rotational speed. The peripheral speed ranges from 15 m/s in small domestic ventilators to more than 600 m/s and speeds of more than 150,000 min^{-1} in turbochargers. While the fluid at low pressures and velocities can still be regarded as incompressible, at higher pressures it must be considered compressible.

Velocities on the cascade using the example of an axial fan

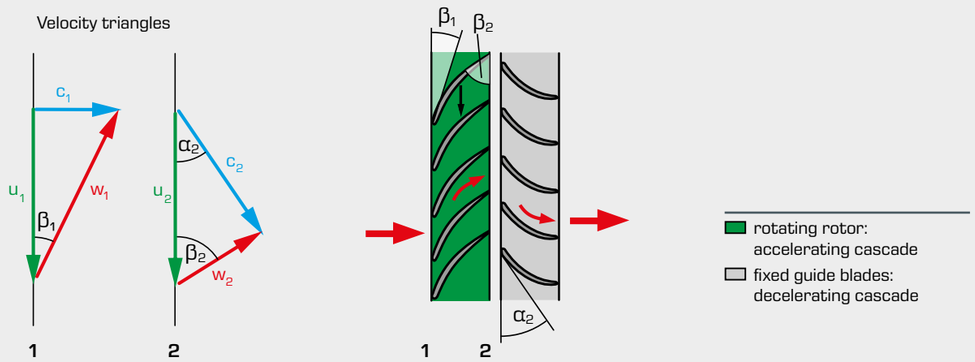

c absolute velocity of the fluid, **w** relative velocity of the fluid, **u** peripheral speed of the rotor;
1 rotor inlet, **2** rotor outlet

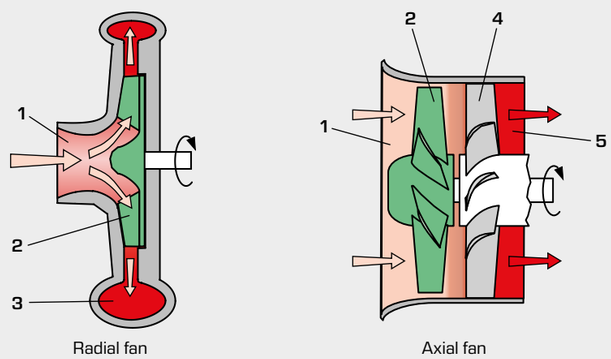

Types

As with other turbomachines, a distinction is made between radial and axial fans depending on the direction of flow.

1 inlet, **2** rotor, **3** spiral housing, **4** guide blades, **5** outlet

Characteristics of fans

A fan is characterised by the specific speed **σ**. It is formed from the speed **n**, volumetric flow rate **Q** and specific hydraulic energy **Y**.

The ideal efficiency of a fan is achieved at a specific speed of **σ** = 0,3 – 0,6.

The specific hydraulic energy **Y** is the difference of the working capability of the fluid between the inlet and outlet of the turbomachine. It is calculated from the product of the head **H** and the gravitational acceleration **g**.

$$\sigma = n \cdot \frac{2 \cdot \sqrt{\Pi} \cdot \sqrt{Q}}{(2 \cdot Y)^{3/4}}$$

Fan rotor shapes

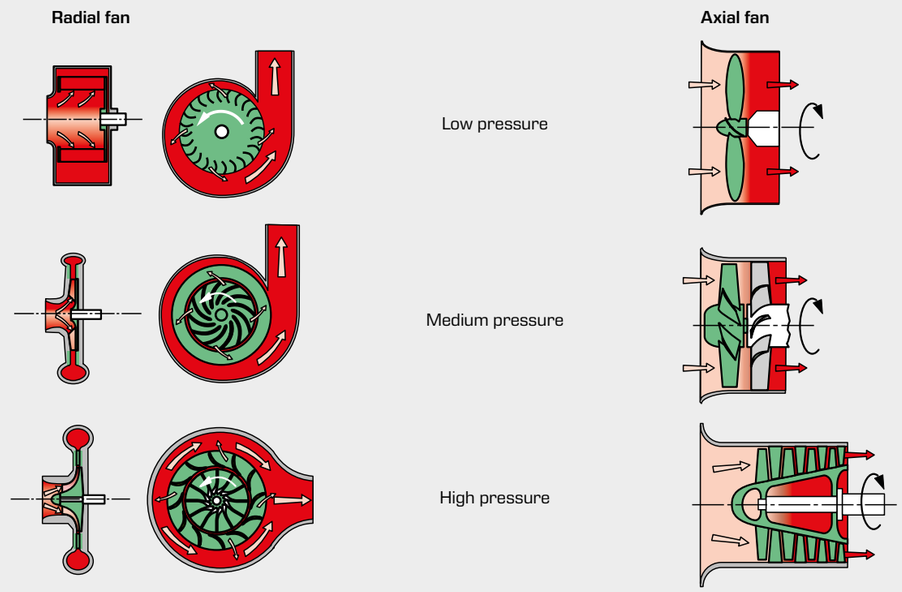

Operating behaviour

The diagram shows the characteristic field of a high-pressure fan. The pressure ratio p_2 / p_1 is plotted against the mass flow rate for different speeds n_1 to n_8 in red. Green lines show the same efficiency η_1 to η_3.

The operating range is restricted at low mass flows via the surge line (grey region). At small mass flows, the flow in the rotor becomes unstable, resulting in flow separation and partial return flows. In axial compressors in particular, this area should be avoided since the blades are placed under high stress.

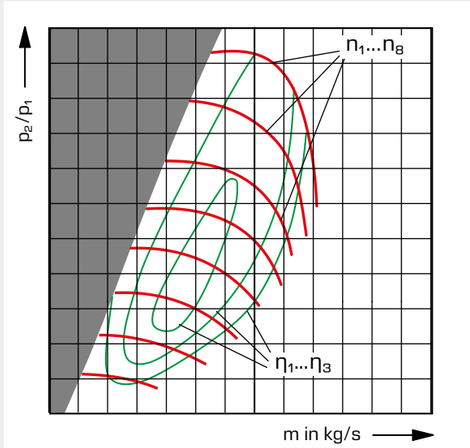

HM 282
Experiments with an axial fan

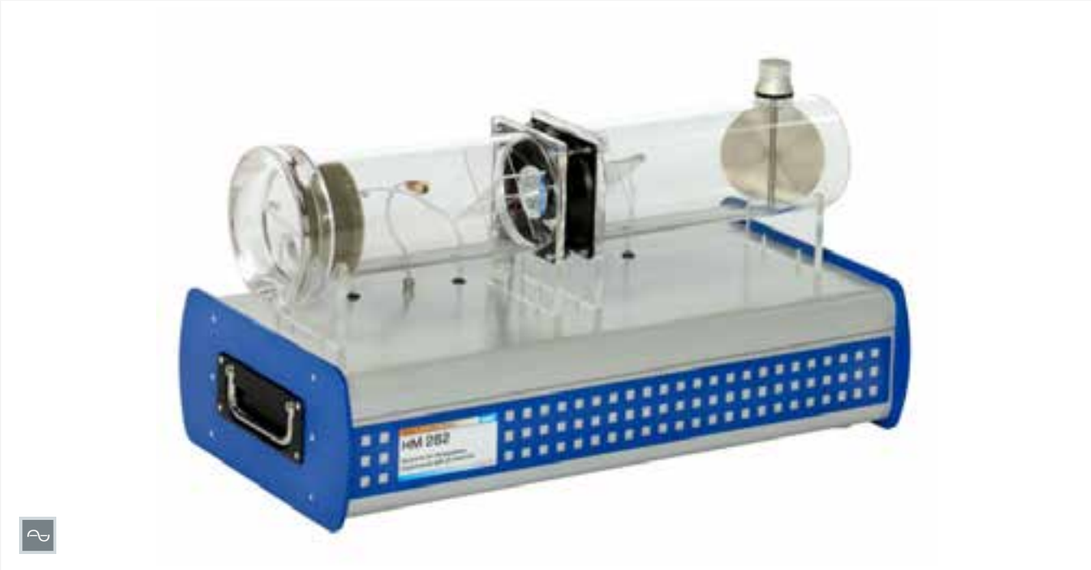

Description

- **illustrative model of an axial fan**
- **transparent delivery pipe and intake pipe**
- **GUNT software for data acquisition, visualisation and operation**
- **part of the GUNT-Labline fluid energy machines**

Axial fans are used to transport gases. The medium to be transported is drawn in axially to the drive shaft of the axial fan by the rotation of the rotor. The medium flows through the rotor and is discharged axially behind the rotor.

The experimental unit provides the basic experiments to get to know the operating behaviour and the important characteristic variables of axial fans.

HM 282 features an axial fan with variable speed via an integrated controller, an intake pipe and a delivery pipe. The transparent intake and delivery pipes are fitted with guide plates for flow guidance.

A flow straightener in the intake pipe serves to calm the air. This enables precise measurements even with heavily reduced operation. The air flow is adjusted by a throttle valve at the end of the delivery pipe.

The experimental unit is fitted with sensors for pressure and temperature. The flow rate is determinated via differential pressure measurement on the intake nozzle. The microprocessor-based measuring technique is well protected in the housing. The measured values are transmitted directly to a PC via USB where they can be analysed using the software included.

All the advantages of software-supported experiments with operation and evaluation are offered by the GUNT software and the microprocessor.

Learning objectives/experiments

- operating behaviour and characteristic variables of an axial fan
- recording the fan characteristic (differential pressure as a function of the flow rate)
- effect of the rotor speed on the pressure
- effect of the rotor speed on the flow rate
- stall
- determination of hydraulical power output and efficiencies

HM 282
Experiments with an axial fan

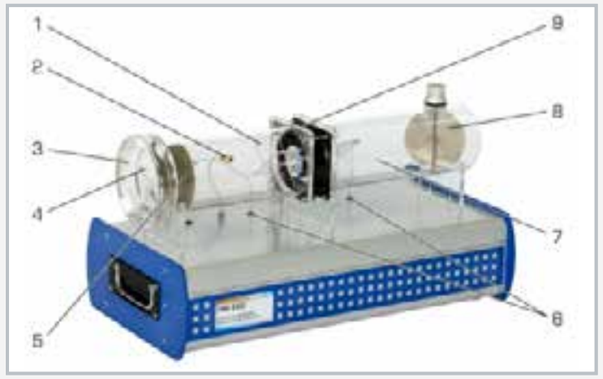

1 guide plates for flow guidance, 2 measuring point for temperature, 3 intake nozzle at intake pipe, 4 measuring point for pressure (to determine the flow rate), 5 flow straightener, 6 measuring points for pressure, 7 delivery pipe, 8 throttle valve, 9 axial fan

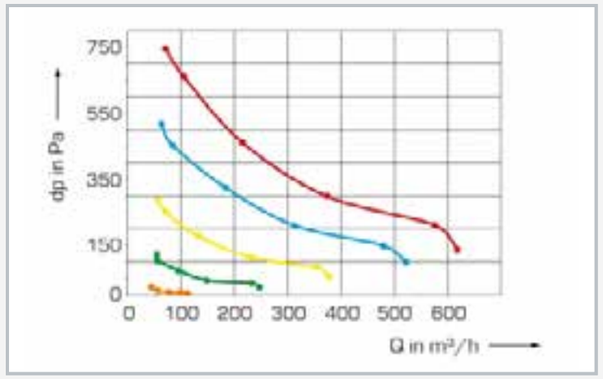

Characteristic curves for an axial fan: differential pressure dependent on the flow rate at different speeds; pd differential pressure, Q flow rate

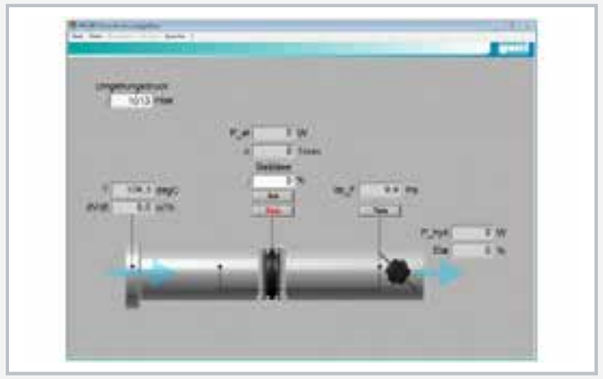

Operating interface of the powerful software

Specification

[1] functioning and operating behaviour of an axial fan
[2] axial fan with electronically commutated drive motor
[3] variable speed via integrated controller
[4] transparent intake and delivery pipes
[5] throttle valve to adjust the air flow in the delivery pipe
[6] determination of flow rate via intake nozzle
[7] display of differential pressure, flow rate, speed, electrical power consumption and hydraulical power output, temperature and efficiency
[8] due to integrated microprocessor-based instrumentation no additional devices with error-prone wiring are required
[9] display and evaluation of the measured values as well as operation of the unit via software
[10] GUNT software with control functions and data acquisition via USB under Windows 7, 8.1, 10

Technical data

Intake pipe
- inner diameter: 110mm
- length: 275mm

Delivery pipe
- inner diameter: 110mm
- length: 310mm

Axial fan
- power consumption: 90W
- nominal speed: 9500min^{-1}
- max. volumetric flow rate: approx. 600m^3/h
- max. pressure difference: approx. 700Pa

Measuring ranges
- differential pressure: 0...1800Pa
- flow rate: 0...1000m^3/h
- temperature: 0...100°C
- speed: 0...9999min^{-1}
- power consumption: 0...500W

230V, 50Hz, 1 phase
230V, 60Hz, 1 phase; 120V, 60Hz, 1 phase
UL/CSA optional
LxWxH: 670x340x370mm
Weight: approx. 15kg

Required for operation

PC with Windows

Scope of delivery

1 experimental unit
1 GUNT software CD + USB cable
1 set of instructional material

HM 215
Two-stage axial fan

Axial fans are often used in practice in building services engineering for air conditioning and ventilation systems. In order to increase the supply pressure axial fans can be connected in series. In this case they are known as two-stage fans.

With HM 215 GUNT offers experiments on a two-stage axial fan. In addition, the trainer allows the investigation of a fan in stand-alone operation. Theory and practice can be compared in a simple way.

The device is equipped with sensors for temperature and differential pressure. The flow rate is determined by differential pressure in the inlet nozzle.

Learning objectives

- determining the fan characteristic
- stand-alone or series configuration of axial fans
- determining the energy balance
- determining the pressure and velocity distribution on rotor and guide vane by means of a probe
- effect of rotating blade position

Measuring device with 3-hole probe for determining the differential pressure on rotor and guide vane

A carefully designed nozzle contour and a flow straightener at the air inlet ensure turbulence-free flow of the blades

The experimental unit is equipped with two high-power axial fans

Throttle valve at the end of the measuring section for adjusting the volumetric flow rate

Adjustable blade on the rotor hub

The angle of attack and exit angle, as well as the pressure of the air can be measured with an adjustable measuring probe along the blade radius. Adjusting the blades alters the angle of attack. The GUNT software simplifies measurements with the measuring device and enables the processing and visualisation of measured data.

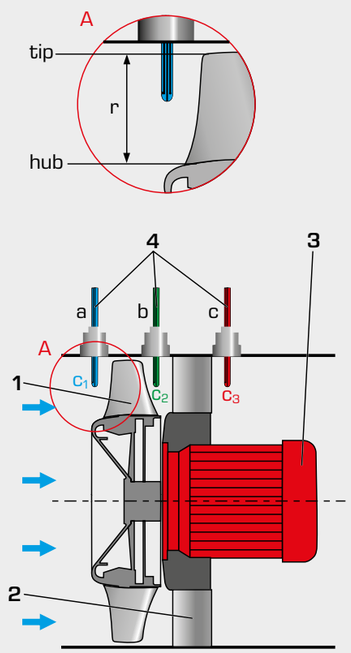

1 adjustable blade on the rotor hub, **2** guide vane, **3** motor, **4** measuring points a-c with 3-hole probe (radial adjustable);

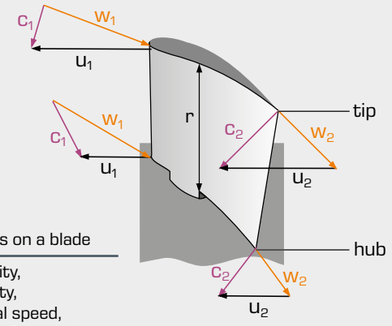

Velocity triangles on a blade

c absolute velocity,
w relative velocity,
u circumferential speed,
r radial position of the probe;

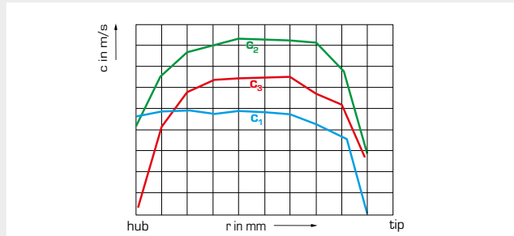

Velocity distribution

- pos. a upstream of rotor, c_1,
- pos. b downstream of rotor, c_2,
- pos. c downstream of guide vane, c_3

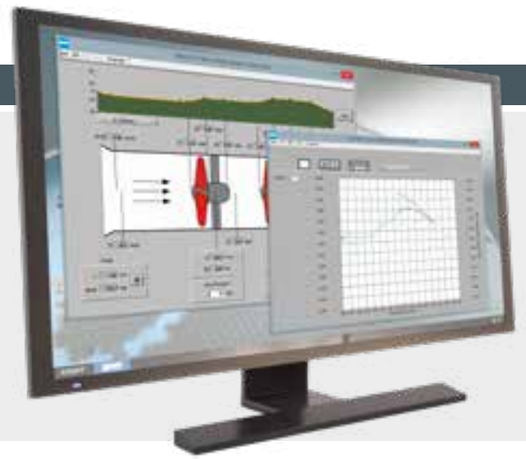

Software

The GUNT software clearly displays the measurements on the PC and allows easy analysis of the measuring results. For example, the pressure curve in the measuring section can be clearly shown for different operating states.

HM 215
Two-stage axial fan

Description

- **two axial fans in series configuration or in individual operation**
- **three-hole probe for determining pressure and velocity profile**

Axial fans are connected in series in plants to increase the pressure. In theory, connecting two fans in series doubles the pressure increase.

The HM 215 trainer allows the investigation of a two-stage axial fan. A measuring device is used to determine the pressure and velocity distribution.

The trainer includes a measuring section with two identical axial fans. The carefully designed nozzle contour and a flow straightener at the air inlet ensure a uniform velocity distribution with little turbulence in the measuring section. The rotors are equipped with individually adjustable blades to change the angle of attack. The fans are equipped with outlet guide vane systems. These guide mechanisms redirect the angular momentum of the outflow in the axial direction and allow an increase in pressure. A pipe bend may optionally be installed to rotate the flow at the outlet of the measuring section. One of the fans can be removed from the measuring section so that the remaining fan can be studied in individual operation.

In the measuring section there are measuring connections to detect the differential pressures and temperatures. The flow rate is measured via an inlet nozzle. The differential pressure and the angle of attack are detected radially at rotors and guide vane systems by means of the 3-hole probe. This enables the display of different pressure and velocity profiles. The measured values are read from digital displays and can at the same time be transmitted via USB directly to a PC where they can be analysed using the software included.

Learning objectives/experiments

- determining the fan characteristic
- series configuration or individual operation of axial fans
- determining the energy balance
- determining the radial pressure and velocity distribution on rotor and guide vane system by means of a probe
- effect of the blade position

HM 215
Two-stage axial fan

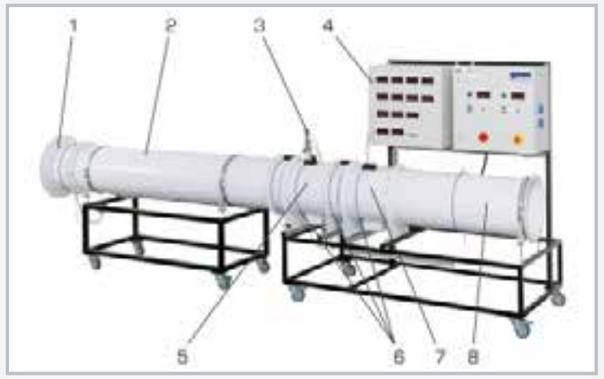

1 nozzle with flow straightener, 2 intake pipe, 3 measuring device, 4 switch box, 5 fan no. 1, 6 pressure measuring points, 7 fan no. 2, 8 throttle valve

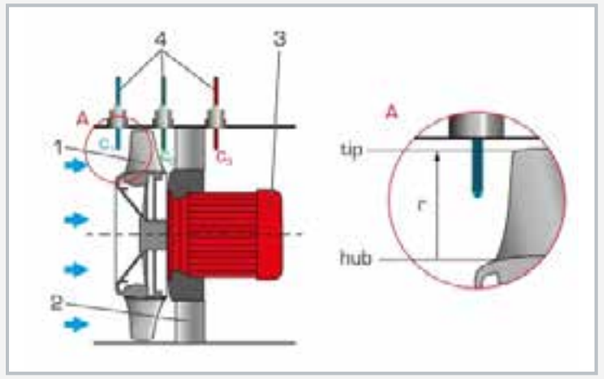

Fan with measuring device
1 adjustable blade on the rotor hub, 2 guide vane system, 3 motor, 4 measuring points with 3-probe hole; c_1 to c_3 absolute velocities, r radial position of the probe

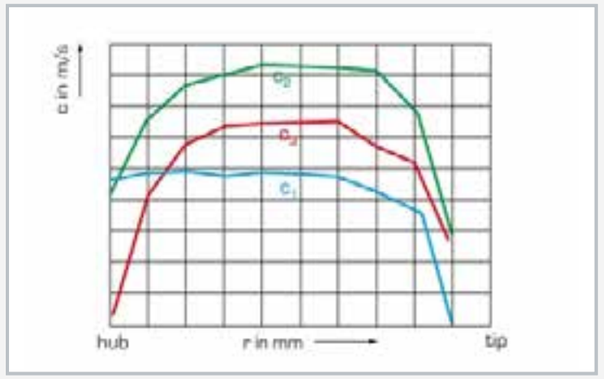

Velocity distribution along the blade in radial direction
blue: c_1 upstream of the rotor, green: c_2 downstream of the rotor, red: c_3 downstream of the guide vane system; v velocity, r radial position of the probe along the blade from hub to tip

Specification

[1] investigate two-stage axial fan
[2] 2 identical single-stage fans in series configuration or individual operation
[3] individually adjustable blades
[4] fans both with variable speed via frequency converter
[5] flow-optimised nozzle and flow straightener for smooth, low-turbulence flow
[6] air flow in the pipe section can be adjusted via throttle valve
[7] optional pipe bend at the outlet for flow deflection
[8] measuring device with three-hole probe for determining the differential pressure on rotor and guide vane system
[9] sensors for pressure and temperature upstream and downstream of each fan
[10] volumetric flow rate measured via inlet nozzle
[11] GUNT software for data acquisition via USB under Windows 7, 8.1, 10

Technical data

2 fans
- drive motor rated output: 3,45kW
- max. pressure difference: 798Pa
- speed: 0...2850min^{-1}
- blade angle adjustable up to 39°

Measuring section inner diameter: 400mm

Measuring ranges
- temperature: 0...100°C
- differential pressure: ±25mbar
- radial position of the probe: 100...200mm

400V, 50Hz, 3 phases
400V, 60Hz, 3 phases
LxWxH without pipe outlet: 4325x970x1800mm
Length with pipe outlet: 5225mm
Weight: approx. 250kg

Required for operation

PC with Windows recommended

Scope of delivery

1 trainer with 2 fans
1 pipe bend
1 measuring device
1 set of measuring hose with quick-release couplings
1 CD with GUNT software + USB cable
1 set of instructional material

HM 210
Characteristic variables of a radial fan

Learning objectives/experiments

- setup and principle of a radial fan
- plotting fan and system characteristics
- flow rate measurement methods based on the differential pressure method using:
  - iris diaphragm
  - Venturi nozzle
  - comparison of both measurement methods
- familiarisation with various differential pressure gauges
- determining efficiency

Description

- **investigation of a radial fan and determination of characteristic variables**
- **determination of flow rate via iris diaphragm or Venturi nozzle**
- **different liquid column manometers measure the differential pressure with varying accuracy**

Fans are key components of ventilation systems, providing ventilation, cooling, drying or pneumatic transport. For optimum design of such systems, it is important to know the characteristic variables of a fan.

HM 210 investigates a radial fan. This trainer determines the interdependencies between the head and flow rate as well as the influence of the fan speed on the head and flow rate.

The radial fan aspirates the air in axially from the surrounding environment. The high-speed rotating rotor accelerates the air outwards. The high velocity at the outlet from the rotor is partially converted into pressure energy in the spiral housing. The vertical pipe section is connected to the spiral housing. A Venturi nozzle to measure the flow rate and a throttle valve to adjust the flow rate are inserted into the pipe section. An iris diaphragm can optionally be used. Its variable cross-section enables simultaneous adjustment and determination of the flow rate. The effective pressures to calculate the flow rate are read from liquid column manometers. The head of the radial fan is likewise measured by liquid column manometers. U-tube manometer, single tube manometer and inclined tube manometer with graduated measuring ranges are available.

A frequency converter is used to adjust the fan speed. The speed, torque and electric power capacity are digitally displayed. This permits energy analyses, and enables the efficiency of the fan to be determined.

The system characteristic curve is determined by recording the characteristic variables at a constant throttle setting but at variable speed. The interaction of the fan and system at the operation point – the so-called system dimensioning – is investigated.

HM 210
Characteristic variables of a radial fan

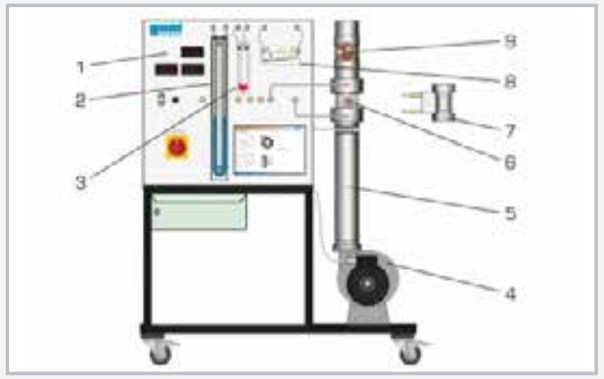

1 switch cabinet with display elements, 2 U-tube manometer, 3 single tube manometer, 4 radial fan with air intake, 5 pipe section, 6 iris diaphragm, 7 Venturi nozzle, 8 inclined tube manometer, 9 throttle valve

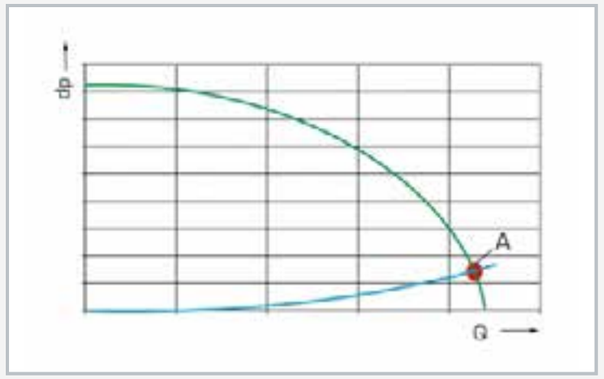

Green: fan characteristic; blue: system characteristic; A, red: system operation point

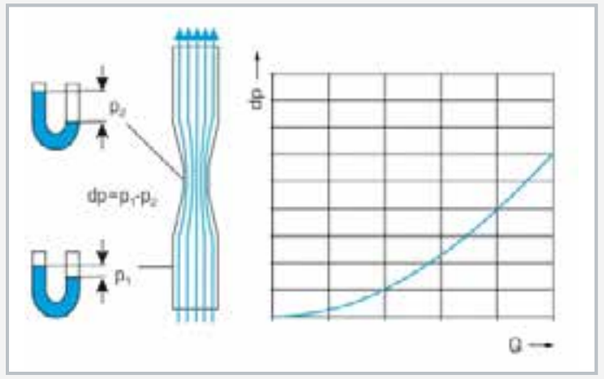

Air flow in the Venturi nozzle; p_1, p_2 pressure measuring points; graph: differential pressure dp as function of flow rate Q

Specification

[1] radial fan as turbomachine
[2] iris diaphragm or Venturi nozzle to determine flow rate via the differential pressure
[3] speed adjustment by frequency converter
[4] U-tube manometer, single tube manometer and inclined tube manometer measure the differential pressure
[5] air flow rate in pipe section adjustable by throttle valve or iris diaphragm
[6] speed, torque and electric power capacity digitally displayed

Technical data

Radial fan
- max. power consumption: 370W
- max. pressure difference: 860Pa
- max. volumetric flow rate: $4m^3/min$
- nominal speed: $3000min^{-1}$
- speed range: $1000...3000min^{-1}$

Iris diaphragm adjustable in 6 stages
- diameter: 40...70mm
- k=1,8....7,8

Venturi nozzle
- air inlet diameter: 100mm
- pipe neck diameter: 80mm
- k=7,32

Measuring ranges
- differential pressure:
  - 30...0...30mbar (U-tube manometer)
  - 0...15mbar (single tube manometer)
  - 0...50Pa (inclined tube manometer)

230V, 50Hz, 1 phase
230V, 60Hz, 1 phase; 230V, 60Hz, 3 phases
UL/CSA optional
LxWxH: 1300x720x1640mm
Weight: approx. 123kg

Scope of delivery

1 trainer
1 Venturi nozzle
1 iris diaphragm
1 set of accessories
1 set of instructional material

HM 280
Experiments with a radial fan

Learning objectives/experiments

- operating behaviour and characteristic variables of a radial fan
- recording the fan characteristic (pressure difference as a function of the flow rate)
- effect of the rotor speed on the pressure
- effect of the rotor speed on the flow rate
- effect of different blade shapes on the fan characteristic and efficiency
- determination of hydraulical power output and efficiencies

Description

- **2 interchangeable rotors**
- **transparent delivery pipe and intake pipe**
- **GUNT software for data acquisition, visualisation and operation**
- **part of the GUNT-Labline fluid energy machines**

Radial fans are used to transport gases with non-excessive pressure differences. The medium is drawn in axially to the drive shaft of the radial fan and is deflected by 90° by the rotation of the rotor and discharged radially.

The experimental unit provides the basic experiments to get to know the operating behaviour and the most important characteristic variables of radial fans.

HM 280 features a radial fan with variable speed via a frequency converter, an intake pipe and a delivery pipe. The transparent intake pipe is fitted with guide plates for flow guidance and with a flow straightener to calm the air. This enables precise measurements even with heavily reduced operation. The air flow is adjusted by a throttle valve at the end of the delivery pipe.

To demonstrate the effect of different blade shapes two rotors are included in the scope of delivery: one rotor with forward curved blades and one with backward curved blades. The rotors are easily interchangeable.

The experimental unit is fitted with sensors for pressure and temperature. The flow rate is determinated via differential pressure measurement on the intake nozzle. The microprocessor-based measuring technique is well protected in the housing. The measured values are transmitted directly to a PC via USB where they can be analysed using the software included.

All the advantages of software-supported experiments with operation and evaluation are offered by the GUNT software and the microprocessor.

HM 280
Experiments with a radial fan

1 measuring points for pressure, 2 measuring point for temperature, 3 inlet nozzle with measuring point for static pressure, 4 intake pipe, 5 guide plates, 6 radial fan with drive motor, 7 delivery pipe, 8 throttle valve

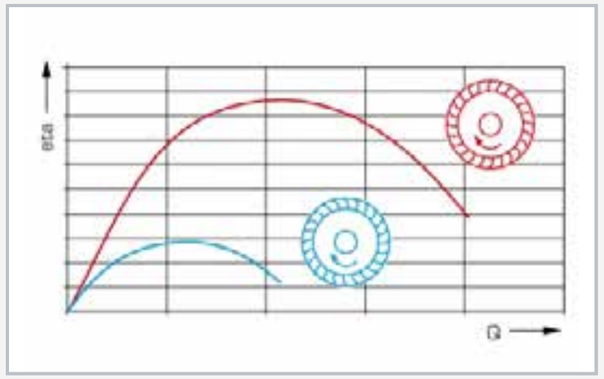

Efficiencies in comparison; red: rotor with forward curved blades, blue: rotor with backward curved blades; eta efficiency, Q débit

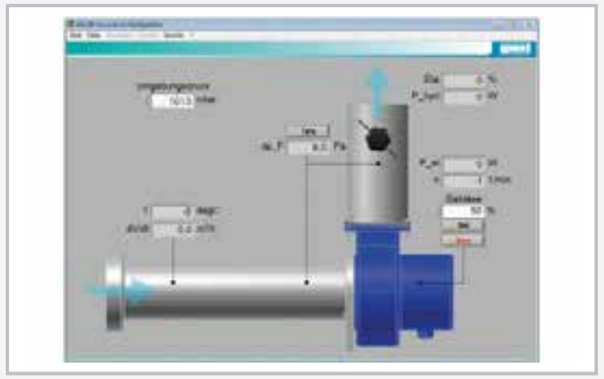

Operating interface of the powerful software

Specification

[1] functioning and operating behaviour of a radial fan
[2] radial fan with 3-phase AC motor
[3] variable speed via frequency converter
[4] transparent intake and delivery pipes
[5] throttle valve to adjust the air flow in the delivery pipe
[6] interchangeable rotors: 1 rotor with forward curved blades and 1 rotor with backward curved blades
[7] determination of flow rate via intake nozzle
[8] display of differential pressure, flow rate, speed, electrical power consumption and hydraulical power output, temperature and efficiency
[9] due to integrated microprocessor-based instrumentation no additional devices with error-prone wiring are required
[10] display and evaluation of the measured values as well as operation of the unit via software
[11] GUNT software with control functions and data acquisition via USB under Windows 7, 8.1, 10

Technical data

Intake pipe
- inner diameter: 90mm
- length: 430mm

Delivery pipe
- inner diameter: 100mm
- length: 530mm

Radial fan
- power consumption: 110W
- nominal speed: 2800min^{-1}
- max. volumetric flow rate: 480m^3/h
- max. pressure difference: 300Pa

Measuring ranges
- differential pressure: 0...1800Pa
- flow rate: 0...1000m^3/h
- temperature: 0...100°C
- speed: 0...3300min^{-1}
- electrical power consumption: 0...250W

230V, 50Hz, 1 phase
230V, 60Hz, 1 phase; 120V, 60Hz, 1 phase
UL/CSA optional
LxWxH: 670x340x940mm
Weight: approx. 20kg

Required for operation

PC with Windows

Scope of delivery

1 experimental unit
2 rotors
1 GUNT software CD + USB cable
1 set of instructional material

HM 292
Experiments with a radial compressor

Description

- **illustrative model of a radial compressor**
- **transparent delivery pipe and intake pipe**
- **GUNT software for data acquisition, visualisation and operation**
- **part of the GUNT-Labline fluid energy machines**

Radial compressors are used to compress gases. The medium is drawn in axially to the drive shaft by the rotation of the rotor and flows through the rotor rotating at high speed. By means of centrifugal force, the medium is accelerated towards the outer edge and is compressed in this manner.

The experimental unit provides the basic experiments to get to know the operating behaviour and the important characteristic variables of radial compressors.

HM 292 features a two-stage radial compressor with variable speed via a frequency converter, an intake pipe and a delivery pipe. The intake and delivery pipes are transparent. A protective plate placed in front of the inlet of the intake pipe prevents larger objects from being drawn in or the clogging of the intake opening. The air flow is adjusted by a throttle valve at the end of the delivery pipe.

The experimental unit is fitted with sensors for pressure, temperature and speed. The flow rate is determinated via differential pressure measurement on the intake nozzle.

The microprocessor-based measuring technique is well protected in the housing. All the advantages of software-supported experiments and evaluation are offered by the GUNT software and the microprocessor. The connection to a PC is made by USB.

Learning objectives/experiments

- operating behaviour and characteristic variables of a radial compressor
- recording of the compressor curve for both stages
- effect of the rotor speed on the pressure
- effect of the rotor speed on the flow rate
- distribution of stage pressure ratios
- effect of compression on the temperature increase
- determination of hydraulical power output and efficiencies

HM 292
Experiments with a radial compressor

1 air inlet with protecting plate, 2 two-stage radial compressor with drive motor, 3 delivery pipe, 4 throttle valve, 5 temperature sensor, 6 intake pipe, 7 pressure sensor

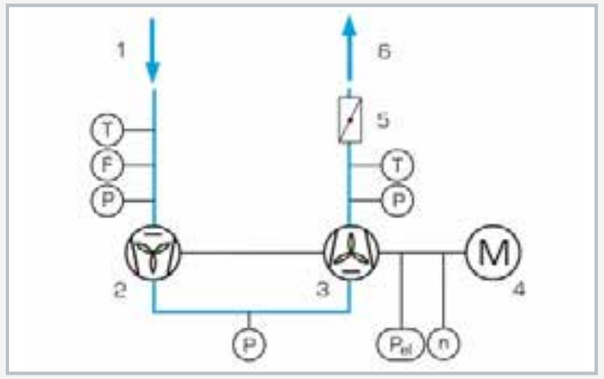

1 air inlet, 2 radial compressor stage 1, 3 radial compressor stage 2, 4 drive motor, 5 throttle valve, 6 air outlet;
T temperature, F flow rate, P pressure, P_{el} power consumption, n speed

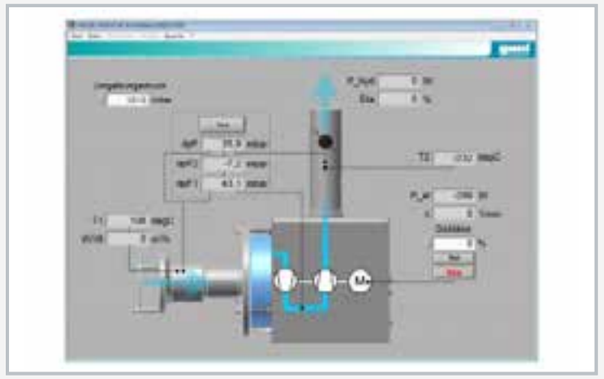

Operating interface of the powerful software

Specification

[1] functioning and operating behaviour of a radial compressor
[2] two-stage radial compressor with drive motor
[3] variable speed via frequency converter
[4] transparent intake and delivery pipes
[5] throttle valve for adjusting the air flow in the delivery pipe
[6] protecting plate at air inlet for undisturbed air flow
[7] determination of flow rate via intake nozzle
[8] display of differential pressures, flow rate, speed, electrical power consumption and hydraulical power output, temperatures and efficiency
[9] due to integrated microprocessor-based instrumentation no additional devices with error-prone wiring are required
[10] GUNT software with control functions and data acquisition via USB under Windows 7, 8.1, 10

Technical data

Intake pipe
- inner diameter: 44mm

Delivery pipe
- inner diameter: 34mm

Two-stage radial compressor
- power consumption: 1000W
- speed: 1000...16000min^{-1}
- max. volumetric flow rate: 180m^3/h
- max. pressure difference: 235mbar

Measuring ranges
- differential pressure (stage 1 / stage 2): 0...350mbar
- flow rate: 0...120m^3/h
- temperature: 2x 0...100°C
- speed (compressor): 0...21000min^{-1}
- electrical power consumption: 0...1000W

230V, 50Hz, 1 phase
230V, 60Hz, 1 phase; 120V, 60Hz, 1 phase
UL/CSA optional
LxWxH: 670x340x530mm
Weight: approx. 20kg

Required for operation

PC with Windows

Scope of delivery

1 experimental unit
1 GUNT software CD + USB cable
1 set of instructional material

ET 513
Single-stage piston compressor with drive unit HM 365

Part of the GUNT-FEMLine

- operating principle of a piston compressor
- measurement of volumetric flow rate and pressures
- power measurement
- determination of efficiency
- plotting of compressor characteristic
- determination of intake and volumetric efficiency

HM 365 Universal drive and brake unit

ET 513 Single-stage piston compressor

Piston compressors deliver compressible media such as gas or air.

Piston compressors are positive displacement machines. The piston (displacement element) forms a space with variable volume together with cylinder and cylinder cover. A crank mechanism generates the periodic reciprocating movement of the piston inside the cylinder. The self-acting valves in the cylinder cover control the inflow and the outflow of the delivered medium.

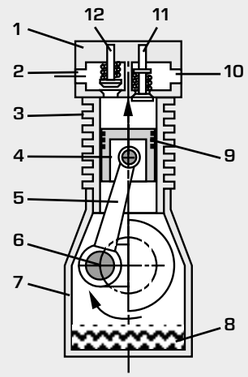

1 cylinder head,
2 air outlet,
3 cylinder with cooling fins,
4 piston,
5 connecting rod,
6 crank shaft,
7 crank case,
8 oil sump,
9 piston rings,
10 air intake,
11 intake valve,
12 discharge valve

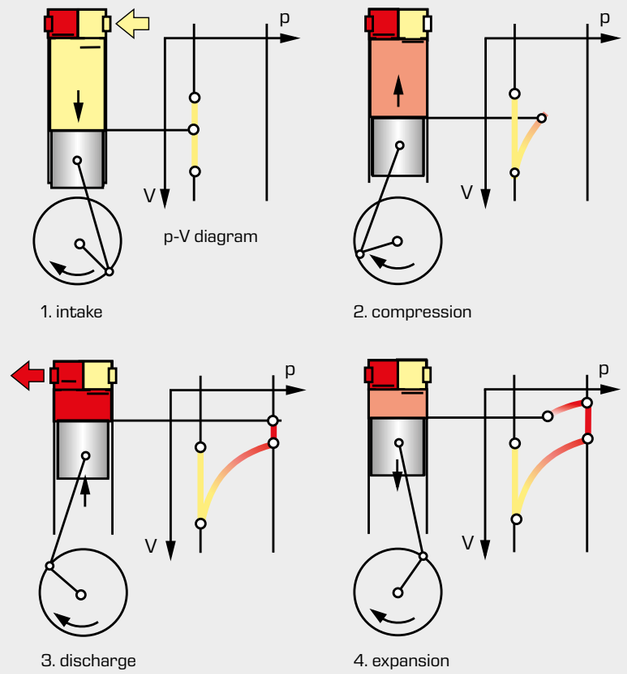

The process of delivery is divided into four steps

1. intake
The piston moves downwards and the delivery medium (air) is sucked into the cylinder via the opened intake valve.

2. compression
The piston moves upwards, the intake valve is closed and the pressure in the cylinder increases.

3. discharge
Once the pressure in the cylinder exceeds the pressure inside the outlet line, the discharge valve opens and the piston pushes the compressed medium into the outlet line.

4. expansion
The cylinder volume is not emptied completely into the outlet line. A small part remains inside the cylinder. This part expands during the downward movement of the piston until the pressure inside the intake line is reached. The first step (intake) follows.

The software enables display of measured values on a PC. Recording and saving of data history is possible.

With the help of spreadsheet programmes (e.g. MS Excel) saved data can be evaluated. The measured values are directly transmitted to the PC via USB.

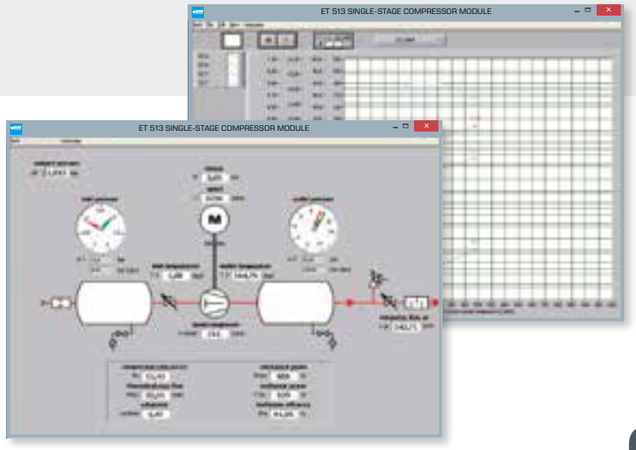

ET 513
Single-stage piston compressor

Learning objectives/experiments

- setup and operating behaviour of a compressed air generation system with single-stage piston compressor
- determination of the characteristic curve
- determination of the volumetric efficiency
- determination of the mechanical efficiency

Description

- **single-stage piston compressor**
- **part of the GUNT-FEMLine**
- **setup of a complete compressor unit in combination with the universal drive and brake unit HM 365**

The generation of compressed air for industrial and commercial purposes in areas where compressed air is used as a source of energy requires what are known as compressed air generation plants. A central part of these systems is the compressor. It is responsible for generating a pressure increase of the air by means of mechanical energy. Compressed air generation plants are used to power machines in the mining industry, for pneumatic control systems in assembly facilities or as tyre inflation units at petrol stations.

The single-stage piston compressor in ET 513 and the drive unit HM 365 together form a complete compressed air generation system.

The drive unit HM 365 powers the compressor by means of a V-belt. The speed of the compressor is set on HM 365. The air is sucked into the intake vessel, where it settles before it is compressed inside the compressor. The compressed air is then delivered to a pressure vessel and is available as a working medium. To set a steady flow operating mode, the compressed air can be discharged over a blow-off valve with a silencer. A pressure switch with a solenoid valve for limiting the pressure and a safety valve complete the system.

A measuring nozzle at the intake vessel is used to determine the suction volumetric flow rate. Sensors record the pressures and temperatures in front of and behind the compressor. The pressure is also displayed on manometers in the tanks. The measured values are read from digital displays and can be transmitted simultaneously via USB directly to a PC, where they can be analysed using the software included. The speed and torque measurement is integrated in HM 365.

ET 513
Single-stage piston compressor

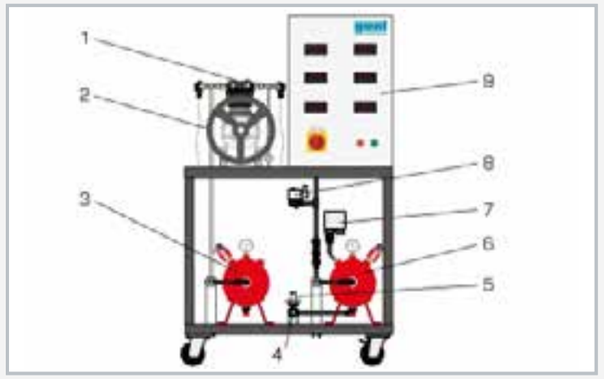

1 compressor, 2 V-belt pulley, 3 intake vessel, 4 blow-off valve with silencer, 5 safety valve, 6 pressure vessel, 7 pressure switch, 8 solenoid valve, 9 switch cabinet with digital displays

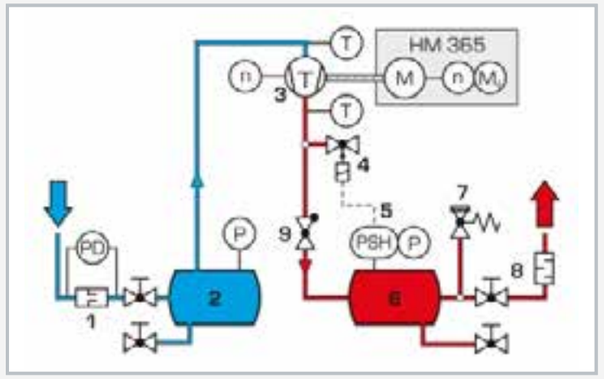

1 measuring nozzle, 2 intake vessel, 3 piston compressor, 4 solenoid valve, 5 pressure switch, 6 pressure vessel, 7 safety valve, 8 blow-off valve with silencer,9 non-return valve; P pressure, PD differential pressure, T temperature, n speed, M_d torque

The illustration shows a complete experimental setup with ET 513 and HM 365

Specification

[1] investigation of a driven machine for compressed air generation
[2] single-stage piston compressor with one cylinder
[3] drive and speed adjustment via HM 365
[4] intake vessel with measuring nozzle for determination of the suction volumetric flow rate
[5] intake vessel and pressure vessel, both with pressure sensor and additional manometer
[6] safety valve and pressure switch with solenoid valve for limiting the pressure
[7] blow-off valve with silencer for setting a steady flow operating mode
[8] pressure and temperature sensors in front of and behind the compressor
[9] digital display for air flow rate, temperatures, pressures, differential pressures and compressor speed
[10] GUNT software for data acquisition via USB under Windows 7, 8.1, 10

Technical data

Compressor, 1 cylinder, single-stage
- power consumption: 750W
- nominal speed: 980min^{-1}
- positive operating pressure: 8bar
- max. pressure: 10bar
- intake capacity: 150L/min at 8bar
- borehole: 65mm
- stroke: 46mm

Safety valve: 10bar
Pressure vessel
- 16bar
- volume: 20L

Intake vessel: 20L

Measuring ranges
- temperature: 1x 0...200°C / 1x 0...100°C
- pressure: 0...16bar / -1...1bar
- flow rate: 0...150L/min
- speed: 0...1000min^{-1}

230V, 50Hz, 1 phase
230V, 60Hz, 1 phase
120V, 60Hz, 1 phase
UL/CSA optional
LxWxH: 900x800x1510mm
Weight: approx. 130kg

Required for operation

PC with Windows recommended

Scope of delivery

trainer, 1 GUNT software CD + USB cable, 1 V-belt, 1 V-belt guard, 1 set of instructional material

HM 299 Comparison of positive displacement machines and turbomachines

HM 299 Comparison of positive displacement machines and turbomachines:
The illustration shows the trainer with two centrifugal pumps connected in parallel

	Turbomachines	Positive displacement machines	
		Rotating	Oscillating
Liquid Incompressible working medium water	Centrifugal pump	Impeller pump	Piston pump
Gaseous Compressible working medium air		Rotary vane compressor	Piston compressor

The HM 299 trainer is used to study and compare different positive displacement and turbomachines. It comes with two centrifugal pumps, an impeller pump, a piston pump and two different compressors. All driven machines are arranged on the compact trainer and can be placed in the measuring section easily and quickly. Guide rails enable accurate and simple installation of the devices without additional alignment of the drive. Silicone hoses are connected via quick-release couplings.

Ambient air is used as a compressible working medium, so a compressed air connection is not needed. Two generously sized stabilisation tanks for the compressed air ensure interference-free measurement.

The didactic concept of this compact trainer includes several learning units so that a comprehensive and effective course on driven machines is offered. The experiments can be carried out both by the lecturer as a demonstration in front of the students and by the students themselves in the form of practical laboratory experiments or project work. The simple conversion of the machines enables a variety of experiments in a short time in order to familiarise students with the operational behaviour of positive-displacement and turbomachines.

The experiments are supported by the GUNT data acquisition software.

The comprehensive instructional materials include a detailed introduction to the subject.

GUNT software for data acquisition

The GUNT software included in the scope of delivery displays the measurement results and assists in the evaluation of the experiments.

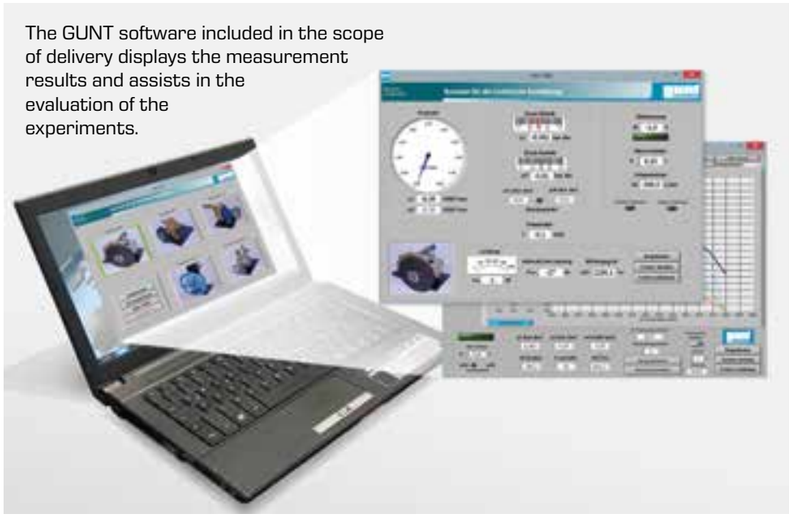

Learning objectives / experiments

- familiarisation with the function and distinctive features of positive displacement machines and turbomachines
- identifying characteristic data
- recording pump, compressor and system characteristics
- representing operating points

HM 299
Comparison of positive displacement machines and turbomachines

The illustration shows a similar unit.

Description

- **investigation of different driven machines: pumps and compressors**
- **experiments with liquid or gaseous media**

Driven machines release absorbed mechanical work to a liquid or gaseous medium. They are divided into positive displacement machines and turbomachine according to their function. For large volumetric flow rates the benefits of turbomachines are predominant, such as centrifugal pumps; for small volumetric flow rates piston engines are more likely to be used.

The HM 299 trainer allows the comparison of different machines for liquid and gaseous media. One turbomachine and four different positive displacement machines, two with rotating pistons and two with oscillating pistons, are supplied. Software for data acquisition and visualisation makes the experiments especially clear and enables fast execution of experiments with reliable results.

HM 299 includes a drive motor with speed adjustment, belt drive and protective hood, two pressure vessels for experiments with compressors and two water tanks for experiments with pumps. Each machine is mounted on a plate and can easily be placed in the trainer. The machines are driven by a belt drive. The pumps are connected to a closed water circuit via hoses with quick-release couplings. Sensors measure the pressures at inlet and outlet, temperature, engine speed and engine output. The respective flow rate is measured indirectly via fill level (water) or Venturi nozzle (air).

The measured values are read from digital displays and can at the same time be transmitted via USB directly to a PC where they can be analysed using the software included.

Learning objectives/experiments

- different pump and compressor types
- identifying characteristic data
- recording pump, compressor and system characteristics
- representation of operating points in series and parallel configuration of centrifugal pumps
- comparison of the different delivery properties

HM 299
Comparison of positive displacement machines and turbomachines

1 measuring tank, 2 displays and controls, 3 stabilisation and pressure vessel, 4 supply tank, 5 pumps and compressors, 6 drive motor

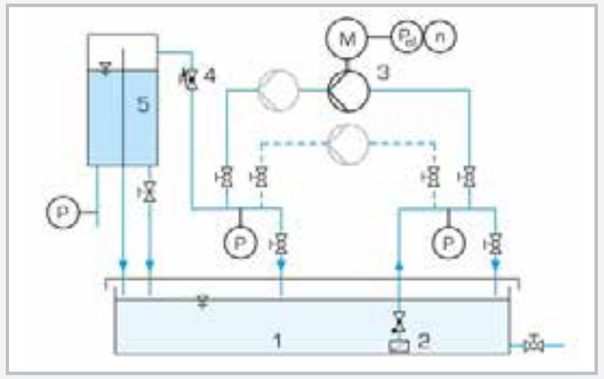

Experiments (centrifugal pumps): 1 supply tank, 2 strainer, 3 pump with drive motor, 4 valve for adjusting the flow rate, 5 measuring tank; P pressure, n speed, P_{el} power

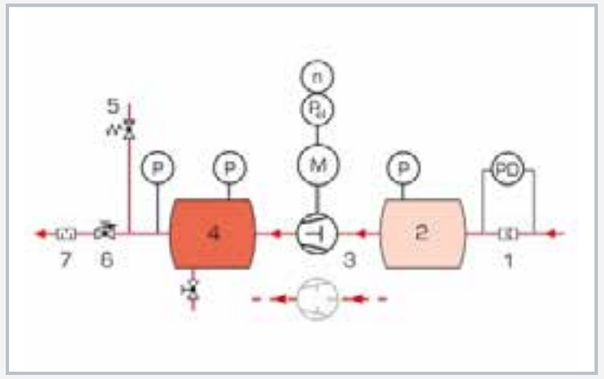

Experiments (compressors): 1 Venturi nozzle for flow measurement, 2 stabilisation tank, 3 compressor with drive motor, 4 pressure vessel, 5 safety valve, 6 valve for adjusting the flow rate, 7 sound damper; P pressure, PD differential pressure, P_{el} power, n speed

Specification

[1] comparison of driven machines for liquid and gaseous media
[2] closed water circuit
[3] 2 compressors: piston compressor and rotary vane compressor
[4] 4 pumps: piston pump, impeller pump, 2 centrifugal pumps
[5] drive motor with variable speed
[6] flow determined by level (water) or Venturi tube (air)
[7] digital displays for pressure, differential pressure, temperature, speed and drive power
[8] GUNT software for data acquisition via USB under Windows 7, 8.1, 10

Technical data

Piston compressor
- max. volumetric flow rate: 115L/min
- max. pressure difference: 10bar

Rotary vane compressor
- max. volumetric flow rate: 90L/min
- max. pressure difference: 0...7bar
- safety valve: 0,8bar

2 centrifugal pumps
- max. flow rate: 60L/min, max. head: 18m

Piston pump
- max. flow rate: 14,6L/min
- system pressure is limited to max. 6bar

Impeller pump
- max. flow rate: 25L/min, max. pressure: 1,5bar

Drive motor, 4-pole
- max. power: 0,75kW
- nominal speed: 1370min^{-1}

2 pressure vessels: 10L, max. 10bar
2 water tanks: 60L, 10L

Measuring ranges
- speed: 0...2500min^{-1}
- power consumption: 0...1375W
- temperature: 0...200°C
- pressure: 1x 0...2bar; 1x 0...6bar; 1x 0...10bar
- differential pressure: 0...10mbar

230V, 50Hz, 1 phase
230V, 60Hz, 1 phase; 120V, 60Hz, 1 phase
UL/CSA optional
LxWxH: 2100x650x1550mm
Weight: approx. 205kg

Required for operation

PC with Windows recommended

Scope of delivery

1 trainer
2x compressor
4x pump
1 set of accessories
1 GUNT software CD + USB cable
1 set of instructional material

4 Power plants and applied cyclic processes

Basic knowledge Cyclic processes	264
Overview GUNT steam power plants	268
ET 810 Steam power plant with steam engine	270
ET 830 Steam power plant, 1,5kW	272
Overview ET 850 + ET 851 Laboratory scale steam power plant	274
ET 850 Steam generator	276
ET 851 Axial steam turbine	278
Overview ET 813 Steam power plant with two-cylinder steam engine	280
ET 813 Two-cylinder steam engine	282
ET 813.01 Electrical steam generator	284
Basic knowledge Gas turbines	286
ET 794 Gas turbine with power turbine	288
ET 796 Gas turbine jet engine	290
Basic knowledge Main elements of a compression refrigeration system	292
Basic knowledge Refrigeration cycle	294
Overview ET 165 Compression refrigeration system with drive unit HM 365	296
ET 165 Refrigeration system with open compressor	298
ET 430 Refrigeration system with two-stage compression	300
ET 352 Vapour jet compressor in refrigeration	302

Basic knowledge

Cyclic processes

Technology uses **cyclic thermodynamic processes** to describe the conversion of thermal energy to mechanical energy and vice versa.

During this process a medium undergoes periodically different **changes of state**, such as compression and expansion, evaporation and condensation, or heating and cooling over a period of time. In a cyclic process, the medium, after having undergone the different changes of state, goes back to its original state and can thus be reused repeatedly.

Suitable media are substances that remain in a permanent gaseous state during the cyclic process, such as air or helium, or substances that change their aggregate state during the process (phase change), like water, ammonia, fluorocarbons, or CO_2.

When a **phase change** occurs, more energy is converted than during simple heating or cooling. This means that phase change processes involve a higher energy density and require lower differences in temperature.

Cyclic processes can be used in driving or driven machines. Driving machines convert thermal energy to mechanical energy, such as in steam power plants. Driven machines convert the supplied mechanical energy into thermal energy, like in a compression refrigeration system.

Representation of cyclic processes in state diagrams

A cyclic thermodynamic process can be illustrated clearly by what are known as state diagrams. The most commonly used state diagrams are:

- **p-v diagram:** pressure **p** against specific volume **v**, suitable for representing mechanical power. It is often used for reciprocating compressors and internal combustion engines with a purely gaseous working medium. Here, cyclic processes can be observed quite well because there is a fixed relationship between volume change and time. The enclosed area is a measure for the mechanical work performed, also known as useful work.
- **h-s diagram:** enthalpy **h** against entropy **s**, for representation of steam turbine processes. It is used for water steam and is well suited as a tool for designing steam turbines.
- **log p-h diagram:** logarithmic representation of the pressure **p** against the specific enthalpy **h**, particularly well suited for cooling processes in refrigeration engineering, as heat fluxes can be read from the diagram directly as horizontal lines. For the vertical pressure scale, a logarithmic division is used, as this is a good way to represent phase limit curves.
- **T-s diagram:** a plot of temperature **T** against entropy **s**, used for the representation of the thermodynamic conditions. The direction of the cyclic process indicates the type of system, driving or driven machine. If the cycle goes **clockwise**, the system is a driving machine, and if it goes **counter-clockwise**, it is a driven machine. In the clockwise direction, heat is absorbed at a high temperature and released at a low temperature. In the counter-clockwise direction, heat is absorbed at a low temperature and released at a high temperature. If the system is operated in the counter-clockwise direction, it is thus suitable as a heat pump or refrigeration machine. As in the p-v diagram, the enclosed area is a measure of the useful work performed.

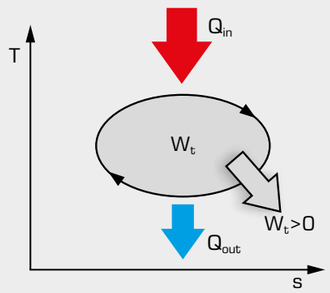

Clockwise direction: driving machine

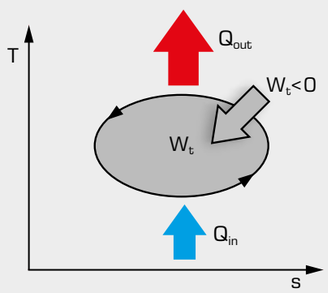

Counter-clockwise direction: driven machine

W_t useful work, **Q** thermal energy, **T** temperature, **s** entropy

Examples of cyclic thermodynamic processes

Type	Driving or driven machine	Working medium	Aggregate state
Steam power plant	driving	water	liquid/gaseous
Internal combustion engine	driving	air/combustion gas	gaseous
Gas turbine	driving	air/combustion gas	gaseous
Stirling engine	driving	air, helium	gaseous
ORC power plant (Organic Rankine Cycle)	driving	fluorocarbons, hydrocarbons	liquid/gaseous
Refrigeration machine	driven	fluorocarbons, hydrocarbons, ammonia, etc.	liquid/gaseous
Stirling refrigeration system	driven	air, helium	gaseous

The following section presents some technically relevant cyclic processes with their diagrams.

The Carnot process

In the T-s diagram, the Carnot process forms a rectangle. The area of the rectangle is a measure of the useful work W_t. The area between the temperature zero and the maximum process temperature is a measure of the required thermal energy **Q**. This means that the following efficiency **η** results are derived for the Carnot process:

$$\eta = \frac{W_t}{Q} = \frac{T_{max} - T_{min}}{T_{max}}$$

The maximum efficiency of a cyclic thermodynamic process thus only depends on the absolute maximum and minimum temperatures, T_{max} and T_{min}. This means that the Carnot process allows statements regarding the quality of any technical cyclic process. Furthermore, it is clear that every thermodynamic process requires a difference in temperatures to perform work. The efficiency of the Carnot process is the highest theoretically possible efficiency of a cyclic process.

The changes of state that are necessary for the Carnot process, like isothermal and isentropic compression and/or expansion, are difficult to realise technically. Despite its high efficiency, this process is therefore of theoretical interest only.

The p-v diagram on the right shows another crucial disadvantage of the Carnot process. Despite large differences in pressure and volume, the surface area of the diagram, and thus the mechanical work performed, is very small. When the Carnot process is applied, this translates to a large and heavy machine with a small output.

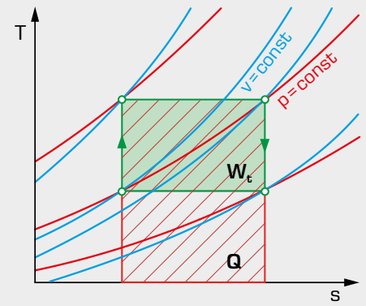

Carnot process in T-s diagram

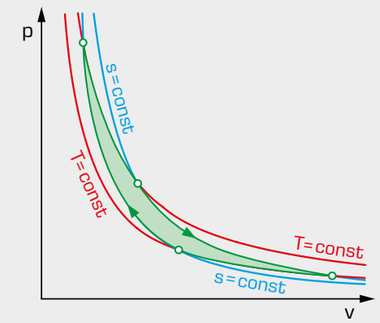

Carnot process in p-v diagram

W_t useful work, **Q** thermal energy, **T** temperature, **p** pressure, **v** specific volume, **s** entropy

Basic knowledge

Cyclic processes

Steam power plant

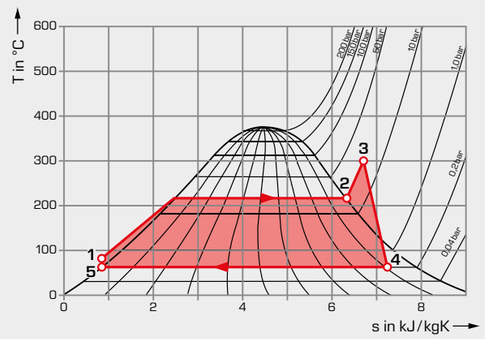

T-s diagram of a steam power plant

The above T-s diagram represents the Rankine cycle of a steam power plant. The working medium is water or water steam.

1 – 2 the water is **isobarically** heated and evaporated in a steam boiler at a pressure of 22 bar
2 – 3 **isobaric** superheating of the steam to 300°C
3 – 4 **polytropic** expansion of the steam in the steam turbine to a pressure of 0,2 bar; mechanical energy is released in the process
Point 4 wet steam area: the wet steam content is now only 90 %
4 – 5 condensation of the steam
5 – 1 increase of the pressure to boiler pressure via the condensate and feed water pump, the cyclic process is complete

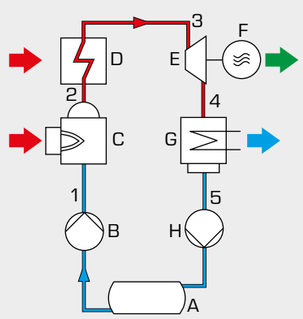

Process schematic for a steam power plant

A feed water tank, **B** feed water pump, **C** steam boiler, **D** superheater, **E** steam turbine, **F** generator, **G** condenser, **H** condensate pump;

thermal energy, low temperature,
thermal energy, high temperature,
mechanical/electrical energy

Gas turbine power plant

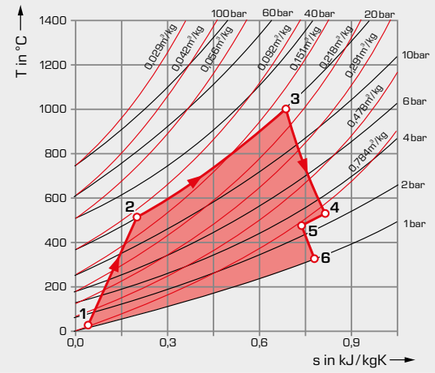

T-s diagram of a gas turbine power plant

The T-s diagram represents a gas turbine process with two-stage expansion in a double shaft system.

1 – 2 **polytropic** compression of air to a pressure of 20 bar; the air has a temperature of 500°C at the outlet of the compressor
2 – 3 **isobaric** heating of air to the inlet temperature of 1000°C of the high-pressure turbine via injection and combustion of fuel
3 – 4 **polytropic** expansion in the high-pressure turbine that drives the compressor
Point 5 in the transition to the power turbine the gas **isobarically** cools down slightly
5 – 6 second expansion in the power turbine: the exhaust gas exhausts and is not returned to the process again, which is why the process is known as an open gas turbine process; the process heat is released into the surroundings

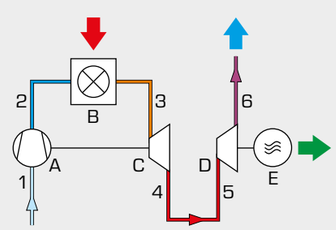

Process schematic for a gas turbine power plant

A compressor, **B** combustion chamber, **C** high-pressure turbine, **D** power turbine, **E** generator;

thermal energy, low temperature,
thermal energy, high temperature,
exhaust gas, mechanical / electrical energy

Internal combustion engine

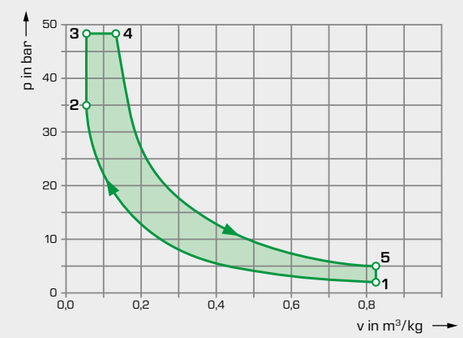

p-v diagram of an internal combustion engine

The p-v diagram shows the Seiliger process of an internal combustion engine. In the case of the internal combustion engine, all changes of state take place in the same space: the cylinder. The changes of state occur one after the other.

1 – 2 **polytropic** gas compression
Point 2 ignition with subsequent fuel combustion

idealised division of the combustion process into:
2 – 3 **isochoric** proportion of the combustion process
3 – 4 **isobaric** proportion of the combustion process

4 – 5 polytropic **(isentropic)** expansion, in this phase the usefull work results
5 – 1 **isochoric** decompression and exchange of working medium

In the case of a 2-stroke engine this takes place without an additional stroke, in a 4-stroke engine the exhaust and intake stroke follows. The Seiliger process, similar to the gas turbine process, is an open cyclic process.

The Seiliger process is a comparative or ideal process that is based on the assumption of a perfect engine. The indicator diagram represents the actual work process.

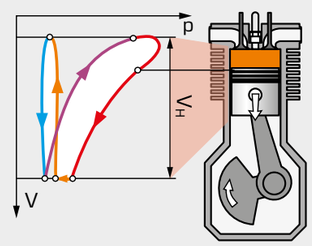

Indicator diagram of a 4-stroke engine

p pressure, **V** volume, **V_H** displaced volume;
intake, compression, power, exhaust

Refrigeration plant

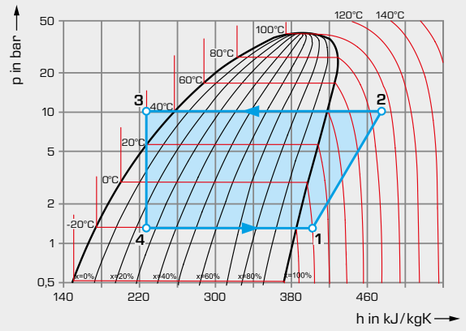

log p-h diagram of a refrigeration plant

This log p-h diagram displays a refrigeration cycle. Working medium is the fluorohydrocarbon refrigerant R134a.

1 – 2 **polytropic** compression
2 – 3 **isobaric** cooling and condensation with heat dissipation
3 – 4 **isenthalpic** expansion to evaporation pressure
4 – 1 **isobaric** evaporation with heat absorption

After being superheated to a certain degree the refrigerant vapour is once again sucked in and compressed by the compressor at point 1. The cyclic process ends.

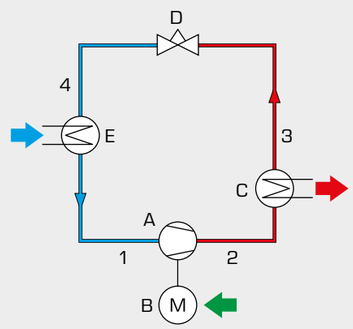

Process schematic of a refrigeration plant

A compressor, **B** drive motor, **C** condenser, **D** expansion valve, **E** evaporator;
thermal energy, low temperature,
thermal energy, high temperature,
mechanical / electrical energy

GUNT steam power plants

Steam power plants play a key role in supplying electrical energy. This is why the Rankine steam cycle is still one of the most important industrially used cyclic processes today. Thanks to optimised processes, the efficiency of electrical energy generation has improved continuously over the past years. Today, a total efficiency of almost 45% has been achieved. The steam cycle process therefore plays an important role in the training of future engineers. GUNT steam power plants for laboratory and experimental applications offer a practical approach to teaching this important subject area in technical fields of study. They are particularly well suited for investigating and understanding the behaviour of steam power plants under different operating conditions. The plants are built with real, industrial components, and can also be used to teach aspects such as maintenance, repair, measurement technology, and control engineering.

ET 810
Steam power plant
with steam engine
(5 W)

ET 813 Two-cylinder steam engine (500W)
together with HM 365 Universal drive and brake unit and
ET 813.01 Electrical steam generator

ET 850 Steam
generator and
ET 851 Axial
steam turbine
(50W)

GUNT offers a wide range of steam power plants

The GUNT steam power plant product range encompasses everything from simple demonstration facilities with a power output of just a few watts, to modular systems in the medium power range, and a complex steam power plant with a process control system and an output power of 20 kW (ET 805).

Due to the size and complexity of ET 805, many aspects of its operating behaviour correspond to those of real large-scale plants, allowing for hands-on training. ET 805 consists of three separate modules and a control station.

ET 805 Steam power plant 20 kW
with process control system

Module D
control station

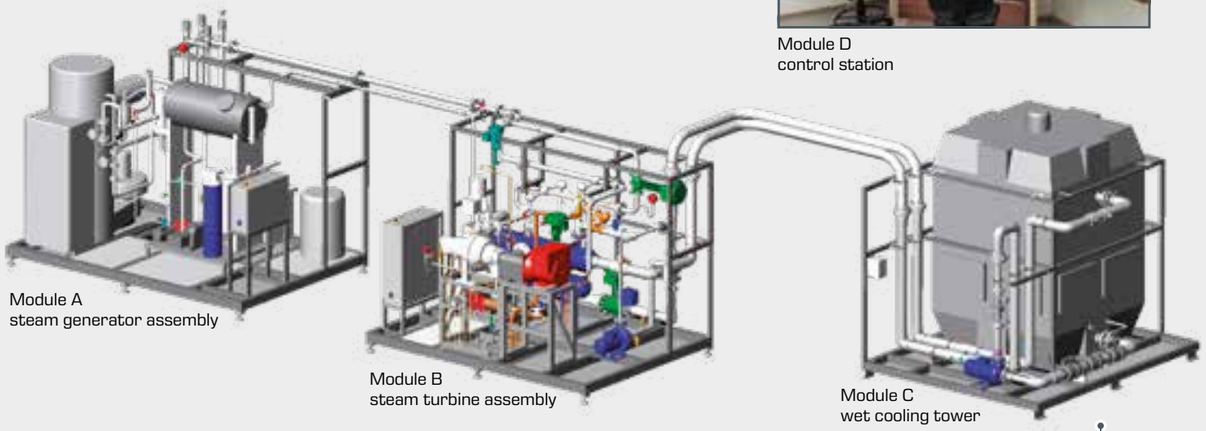

Module A
steam generator assembly

Module B
steam turbine assembly

Module C
wet cooling tower

ET 830
Steam power plant, 1,5 kW

or

ET 833
Steam power plant 1,5 kW
with process control system

5 W | 50 W | 500 W | 1.500 W | 20.000 W

ET 810
Steam power plant with steam engine

Description

- **functional model of a steam power plant**
- **demonstrates the function of a steam engine**

In a steam engine, thermodynamic energy in the form of vapour pressure from steam generators is converted into mechanical energy. This can be used further downstream in the process to generate electricity or to power machinery and vehicles.

A steam power plant consists of a heat source for generating steam, a turbine or steam engine with a generator, and a cooling device for condensing the exhaust steam.

The ET 810 trainer contains the main components of a steam power plant: a gas-fired steam boiler, a single-cylinder piston steam engine with a generator, a condenser, a feed water tank, and a feed water pump.

The steam boiler generates water steam and supplies it to the piston steam engine. A piston and a crank mechanism convert the energy from the steam into mechanical energy.

A generator in the form of a DC motor generates electricity from the mechanical power. Four light bulbs are used as consumers of the resulting electrical energy. The exhaust steam is condensed in a water-cooled condenser.

Safe operation is ensured by safety devices that monitor the boiler temperature and a safety valve.

Sensors record the temperature, pressure, and flow rate at all relevant points. The measured values can be read on displays. Current and voltage from the generator are measured and displayed in the experimental unit.

Learning objectives/experiments

- demonstration of the function of a steam engine
- familiarisation with the components of a steam power plant and how they interact
- recording the vapour pressure curve
- effect of re-evaporation and backfeed of cold water
- determining fuel consumption, the amount of steam generated, the boiler efficiency, and the capacity of the condenser

ET 810
Steam power plant with steam engine

1 process schematic with displays and controls, 2 steam boiler, 3 feedwater tank, 4 burner, 5 boiler water level indicator, 6 generator, 7 condenser, 8 steam engine

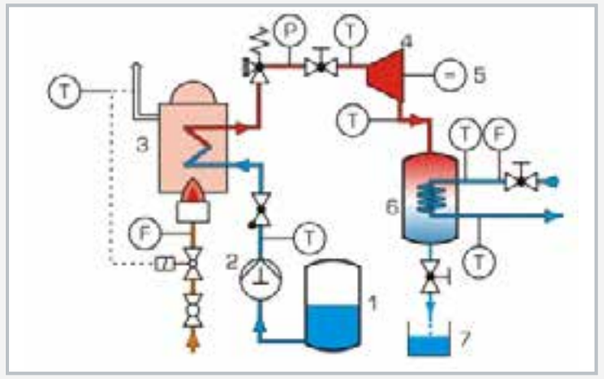

1 feedwater tank, 2 feedwater pump, 3 steam boiler, 4 steam engine, 5 generator, 6 condenser, 7 condensate tank; T temperature, P pressure, F flow rate; orange: gas, red: steam, blue: water

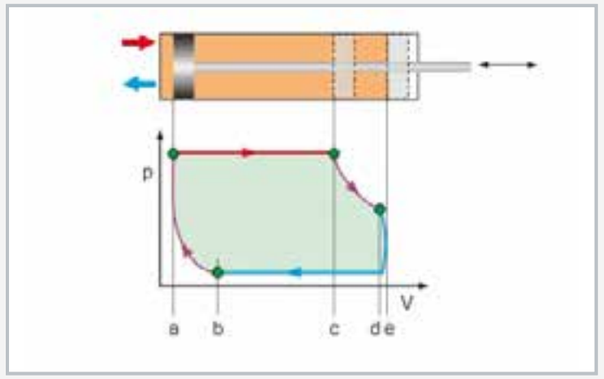

p,V diagram: p pressure, V volume; a top dead centre and inlet opens, c inlet closes, d outlet opens, b outlet closes; red: inlet, blue: outlet, green: work done, purple: compression and expansion

Specification

[1] demonstration of a steam power plant with single-cylinder piston steam engine
[2] gas-fired boiler for steam generation
[3] water-cooled condenser
[4] DC generator
[5] light bulbs as consumers
[6] sensor and display for temperature, pressure, flow rate, voltage and current
[7] safety valve and temperature monitoring for safe operation

Technical data

Steam engine
- power: max. 5W
- speed: max. 1200min^{-1}
- cylinder: Ø 20mm

Generator
- DC motor: max. 3,18W at 6000min^{-1}

Gas-fired boiler
- safety valve: 4bar
- gas connection 3/8"L (propane or butane)

Measuring ranges
- temperature: 8x -20...200°C
- pressure: 0...6bar
- flow rate:
  - 0...110L/h (gas)
  - 15...105L/h (water)
- voltage: 0...10VDC
- current: 0...250mA

230V, 50Hz, 1 phase
230V, 60Hz, 1 phase
120V, 60Hz, 1 phase
UL/CSA optional
LxWxH: 1700x810x1440mm
Weight: approx. 110kg

Required for operation

water connection, drain, gas supply 3/8"L (propane gas or butane gas)

Scope of delivery

1 trainer
1 set of hoses
1 oil (100mL)
1 set of accessories
1 set of instructional material

ET 830
Steam power plant, 1,5kW

Description

- **complete laboratory-sized steam power plant**
- **closed steam-water circuit**
- **plant monitored and controlled with PLC**

In steam power plants, thermal energy is first converted into mechanical energy and then into electrical energy. A steam power plant essentially consists of a heat source for generating steam, a turbine with load, and a cooling mechanism for condensing the steam.

ET 830 has been designed specifically for engineering education in the field of power plant technology, and driving and driven machines. It offers a wide range of experiments to learn about the operational processes in a steam power plant.

An oil-fired once-through steam boiler produces wet steam that is turned into superheated steam by means of a superheater. The boiler's short heat-up time means rapid steam generation is possible. Load is applied to the turbine with a generator. The turbine output is determined by speed and torque.

Downstream of the turbine, the steam is condensed and returned to the boiler. The feedwater circuit is fitted with a complete water treatment system, which consists of a regenerable ion exchanger and chemical dosing. Sensors record the temperature, pressure, speed, and flow rate at all relevant points. The measured values can be read on digital displays. At the same time, the measured values can also be transmitted directly to a PC via USB. The data acquisition software is included. The control panel includes a clear process schematic of the plant. The system is monitored and controlled by a programmable logic controller (PLC).

The experimental plant is built in accordance with statutory safety regulations and includes the mandatory safety facilities. The steam generator is type tested and does not require specific permissions.

The plant can optionally be operated with the cooling tower ET 830.01 or ET 830.02 to supply cooling water.

Learning objectives/experiments

- steam power plant and its components
- start-up, operation and shut down of a steam power plant
- closed steam-water circuit with feedwater treatment
- among others, determining:
  - boiler efficiency
  - mechanical/thermal efficiency of the turbine
  - condenser efficiency
  - specific fuel consumption of the plant

ET 830
Steam power plant, 1,5kW

1 superheater, 2 burner, 3 boiler, 4 condenser, 5 condensate pump, 6 turbine, 7 displays and controls, 8 feedwater tank with feedwater treatment

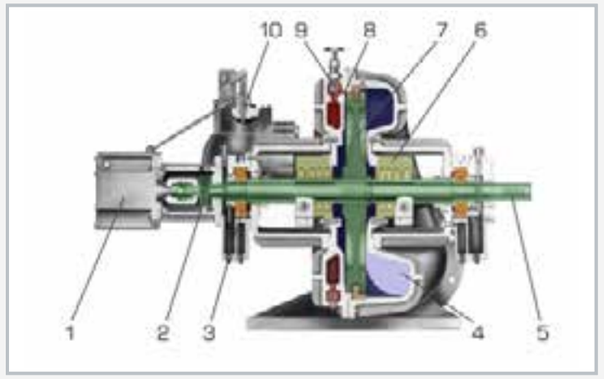

Sectional representation of the steam turbine used: 1 speed regulator, 2 tripping function, 3 bearing, 4 exhaust nozzle, 5 shaft, 6 shaft seal, 7 Curtis wheel, 8 nozzle, 9 nozzle valve, 10 control valve

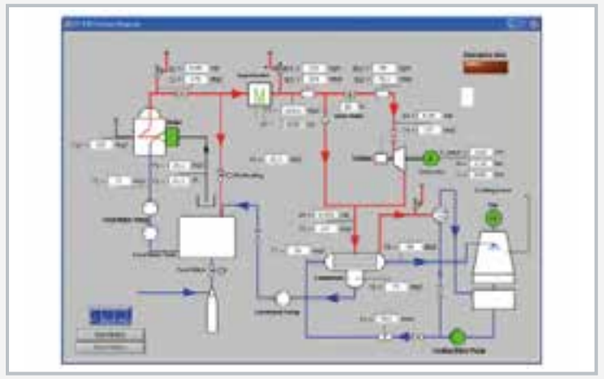

Software screenshot: process schematic

Specification

[1] laboratory-sized steam power plant
[2] oil-fired steam generator with electric superheater
[3] single-stage axial turbine with Curtis wheel, vacuum or exhaust operation
[4] DC generator as turbine load
[5] water-cooled condenser
[6] feedwater treatment
[7] GUNT software for data acquisition via USB under Windows 7, 8.1, 10
[8] plant monitored and controlled with integrated PLC
[9] cooling water connection 10m³/h or cooling tower ET 830.01/ET 830.02 required

Technical data

Steam generator
- steam output: 200kg/h at 11bar
- max. fuel consumption: 12L/h
- heat-up time: 8min
- max. pressure: 13bar

Superheater
- power: 7kW

Single-stage axial turbine with Curtis wheel and hydraulic speed regulator
- power: max. 1,5kW at 3000min^{-1}

Water-cooled condenser
- cooling capacity: 98kW
- transfer surface: 2,5m²

Measuring ranges
- temperature: 9x 0...400°C, 2x 0...100°C
- flow rate: 0...167L/min (cooling water)
- pressure: 3x 0...16bar, 1x ±1bar
- torque: 0...20Nm
- speed: 0...4000min^{-1}

400V, 50Hz, 3 phases
400V, 60Hz, 3 phases, 230V, 60Hz, 3 phases
UL/CSA optional
LxWxH: 3500x2000x2450mm
Weight: approx. 1950kg

Required for operation

cooling water 10m³/h, drain or ET 830.01/ET 830.02
compressed air connection: 4,5bar, 150L/h
ventilation, exhaust gas routing
PC with Windows recommended

Scope of delivery

1 experimental plant
1 GUNT software CD + USB cable
1 set of instructional material including detailed operating manual

ET 850 + ET 851
Laboratory scale steam power plant

When combined, the ET 850 Steam generator and the ET 851 Axial steam turbine from GUNT represent a real laboratory-sized steam power plant.

This plant has all the important components of a real large-scale plant: A once-through water-tube boiler with superheater, a condenser with water jet pump for vacuum operation, a feed water tank, pumps for condensate and feed water, a steam turbine with dynamometer, shaft sealing with labyrinth and sealing steam.

ET 850 Steam generator

1 steam boiler, **2** water separator, **3** superheater, **4,10** condenser, **5** water jet pump, **6** condensate pump, **7** feed water tank, **8** feed water pump, **9** turbine,

ET 851 Axial steam turbine

11 brake; **F** flow, **P** pressure, **PD** differential pressure, **Q** exhaust gas analysis, **S** speed, **T** temperature, **M** torque

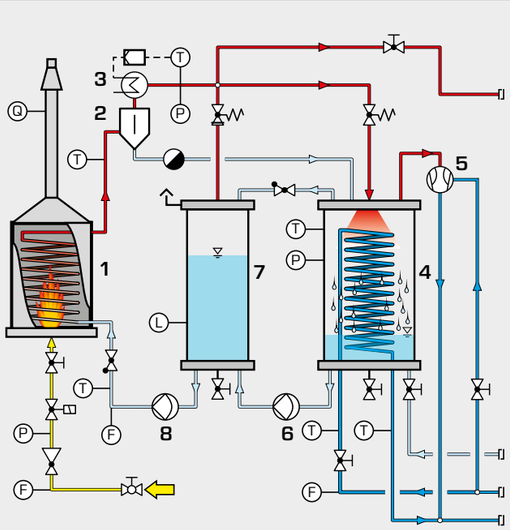

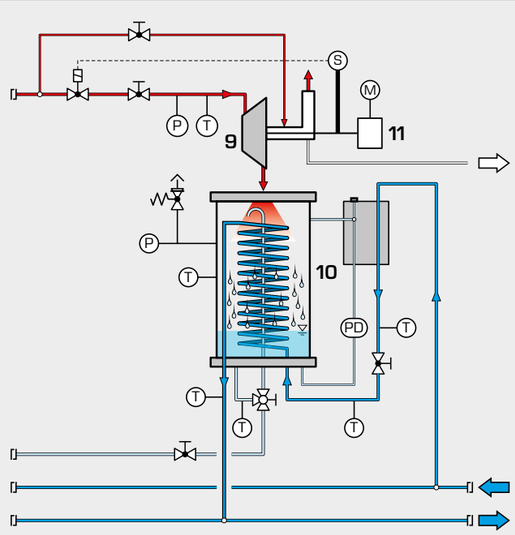

The operating behaviour is very similar to that of a real plant. Students can observe and practice the careful adjustment of the steam generator, turbine, condenser and superheater. The data acquisition software evaluates the results efficiently and accurately, and provides a quick overview.

- once-through water-tube steam boiler design assures highest safety
- quick steam generation due to small water capacity
- electrical superheater enables adjustable superheating of steam
- clean and odourless combustion due to heating with propane or natural gas
- water-cooled condenser evacuated by water jet pump enables operation without steam turbine ET 851 as well

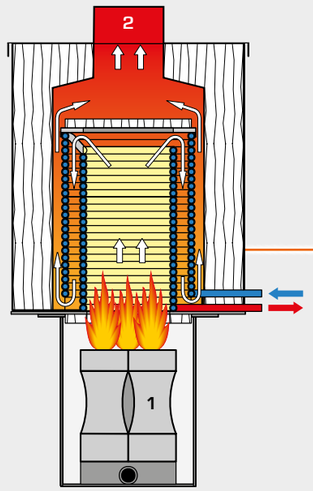

Sectional view of the ET 850 Steam generator

1 burner, **2** exhaust gas, ⬆ direction of flow of the heated air along the heat exchanger

ET 850 Steam generator

ET 851 Axial steam turbine

- single-stage axial flow impulse turbine
- vertical shaft mounted on ball bearings
- contactless labyrinth gland with sealing steam enables vacuum operation
- transparent, water-cooled condenser
- wearless eddy current brake with permanent magnet
- safety cut-off in case of overspeed via trip valve
- steam flow rate determined via condensate level

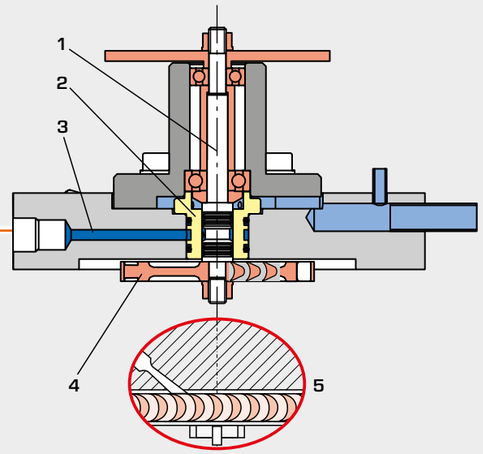

1 shaft, **2** labyrinth unit, **3** steam inlet, **4** rotor, **5** sectional view of nozzle and blades

ET 850
Steam generator

Learning objectives/experiments

- specific characteristic values of a steam boiler
- efficiency of a steam generator
- analysis of the exhaust gases
- influence of different burner settings
- saturation temperature and pressure of the steam
- steam enthalpy
- determination of the heat flux density and the overall heat transfer coefficient

Description

- **laboratory-scale steam generator for wet or overheated steam**
- **characteristic values of a steam boiler**
- **various safety and monitoring devices**
- **setting up a complete steam power plant in conjunction with the ET 851 steam turbine**

A steam generator generates steam which will later be used in drives for steam turbines or for heating. Steam generators and steam consumers together form a steam power plant. Steam power plants work according to the Rankine cycle which is still one of the most important industrially used cyclic processes. Steam power plants are mainly used for electrical power generation.

The ET 850 steam generator and the ET 851 axial steam turbine together form a complete laboratory-scale steam power plant.

The ET 850 trainer serves to familiarise students with the components and principle of operation of a steam generator and enables them to examine the characteristic values of the system.

If the steam generator is operated without the steam turbine, the generated steam is directly liquefied in a condenser and fed back into the evaporation circuit via condensate and feed water pump. A water jet pump evacuates air from the condenser and generates negative pressure. The steam boiler is a once-through boiler with small water content and a short heat-up time.

As all components are clearly arranged on the front panel, the cyclic process can be easily monitored and understood. Sensors record the temperature, pressure and flow rate at all relevant points. The measured values can be read on digital displays. At the same time, the measured values can also be transmitted directly to a PC via USB. The data acquisition software is included.

The steam generator has been constructed according to the Pressure Equipment Directive, it has been pressure-tested and is equipped with all legally required safety devices.

ET 850
Steam generator

1 chimney for exhaust gas, 2 steam boiler, 3 burner, 4 feed water pump, 5 condensate pump, 6 process schematic, 7 condenser, 8 displays and controls, 9 pressure switch, 10 feed water tank

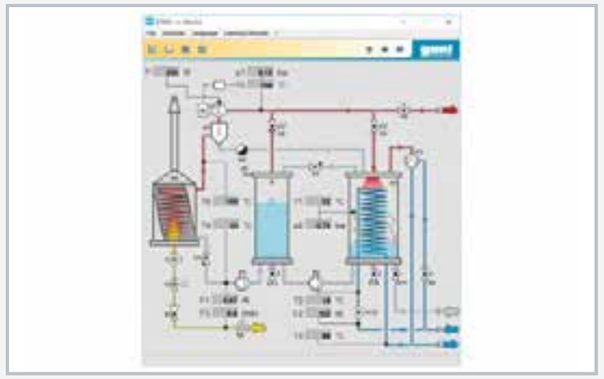

Software screenshot: process schematic

Left: ET 850 steam generator; right: ET 851 axial steam turbine; set up ready for operation, together they form a steam power plant

Specification

[1] steam generator with gas-powered heater
[2] ET 851 steam turbine can be connected to operate a steam power plant
[3] condenser as a thick-walled glass cylinder with water-cooled tube coil and water jet pump for air extraction
[4] closed-circuit feed water supply
[5] sensor for temperature, pressure, flow rate
[6] safety facilities in accordance with the Pressure Equipment Directive for safe operation
[7] exhaust gas analysis with exhaust gas analyser
[8] GUNT software for data acquisition via USB under Windows 7, 8.1, 10

Technical data

Burner
- heating power: 6kW

Steam generator
- once-through boiler
- operating pressure: 8bar, max. pressure: 10bar
- max. steam temperature: 250°C
- max. steam output: 8kg/h
- power of superheater: 750W

Measuring ranges
- temperature: 0...400°C
- pressure:
  - 0...1,6bar abs. (condenser)
  - 0...16bar (live steam)
- flow rate:
  - 0...14L/min (propane gas)
  - 0...720L/h (cooling water)
  - 0...15L/h (feed water)

230V, 50Hz, 1 phase
230V, 60Hz, 1 phase, 120V, 60Hz, 1 phase
UL/CSA optional
LxWxH: 1830x790x1770mm (without chimney)
Weight: approx. 280kg

Required for operation

gas supply (propane gas): 700g/h, 50mbar
water connection: 720L/h, 2bar, drain
ventilation, exhaust gas routing
PC with Windows recommended

Scope of delivery

1 trainer
1 GUNT software CD + USB cable
1 exhaust gas analyser
1 packing unit of distilled water (20L)
1 set of tools
1 set of instructional material

ET 851
Axial steam turbine

Description

- **laboratory-scale axial single-stage steam turbine**
- **variety of safety and monitoring equipment**
- **design of a complete steam power plant together with the ET 850 steam generator**

Steam turbines are turbomachines. In practice, steam turbines are mainly used in power plants to generate electricity. A distinction is made between turbines depending on the flow direction and state of the steam, the working process, and steam supply and discharge.

The ET 851 experimental unit is a single-stage axial impulse turbine with a vertical axis. The steam required is generated by the steam generator ET 850. The turbine can be operated with saturated steam or superheated steam. The steam is expanded in the turbine and condensed via the water-cooled condenser. Load is applied to the turbine via an eddy current brake. The turbine has a non-contact labyrinth seal on the shaft with a sealing steam circuit. The turbine is fitted with various safety devices in order to prevent damage such as by excessively high speed or pressure in the system.

Sensors record the temperature, pressure, and flow rate at all relevant points. Turbine speed and torque are measured electronically at the eddy current brake. The measured values can be read on digital displays. At the same time, the measured values can also be transmitted directly to a PC via USB. The data acquisition software is included.

The ET 851 axial steam turbine, together with the ET 850 steam generator, forms a complete laboratory-scale steam power plant.

Learning objectives/experiments

- principle of operation of a steam turbine:
  - steam consumption of the turbine
  - turbine output at different settings
  - investigation of the losses occurring in different turbine components
  - power and torque curve
  - overall efficiency compared to the theoretical efficiency

ET 851
Axial steam turbine

1 displays and controls, 2 valve for sealing steam, 3 steam connection, 4 valve for steam inlet, 5 process schematic, 6 water connections, 7 pressure sensor for condensate measurement, 8 condenser with coil, 9 cooling water flow rate sensor, 10 turbine, 11 eddy current brake, 12 pressure sensor

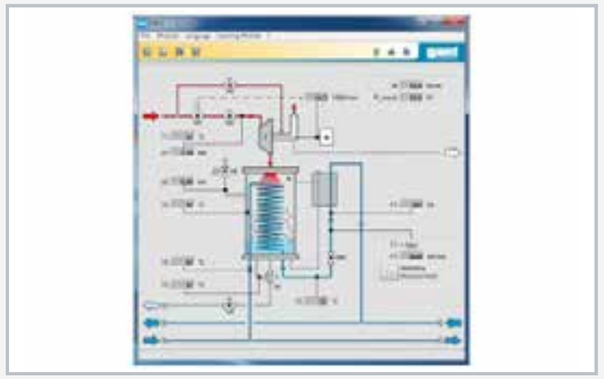

Software screenshot: process schematic

Left: ET 850 steam generator and right: ET 851 axial steam turbine; assembled ready for operation, together both units form a complete steam power plant

Specification

[1] single-stage axial impulse turbine, mounted in corrosion-resistant, sealed ball bearings
[2] load on the turbine by eddy current brake
[3] condenser with water-cooled coiled tube
[4] steam supply from ET 850 steam generator
[5] various safety devices for safe operation
[6] sensors and digital indicator for speed, temperature, pressure and flow rate
[7] GUNT software for data acquisition via USB under Windows 7, 8.1, 10

Technical data

Single-stage axial impulse turbine
- rotor inner diameter: 54mm
- max. speed: 40000min^{-1}
- max. inlet pressure: 9bar abs.
- max. outlet pressure: 1bar abs.
- nominal power output: 50W

Measuring ranges
- pressure:
  - 0...16bar (steam)
  - 0...1,6bar (condenser)
- differential pressure: 0...50mbar
- flow rate: 0...720L/h (cooling water)
- speed: 0...50000min^{-1}
- torque: 0...70Nmm
- temperature: 0...400°C

230V, 50Hz, 1 phase
230V, 60Hz, 1 phase
120V, 60Hz, 1 phase
UL/CSA optional
LxWxH: 1530x790x1770mm
Weight: approx. 180kg

Required for operation

water connection: 350L/h, drain
PC with Windows recommended

Scope of delivery

1 trainer
1 GUNT software CD + USB cable
1 set of instructional material

ET 813
Steam power plant with two-cylinder steam engine

The experimental plant, consisting of a two-cylinder steam engine ET 813, the electrical steam generator ET 813.01 and the universal drive and brake unit HM 365, illustrates the typical cyclic process of a steam power plant. The clear layout and comprehensive instrumentation allow you to observe and understand all functions.

- part of the GUNT-FEMLine
- operating principle of a piston steam engine
- cyclic process of a steam power plant
- power measurement
- energy balances
- determination of efficiency
- electrical steam generator: quick start-up, fully automatic, reliable, no exhaust gases, no fuel necessary
- no special authorisation needed (in EC countries)

HM 365 Universal drive and brake unit

ET 813 Two-cylinder steam engine

ET 813.01 Electrical steam generator

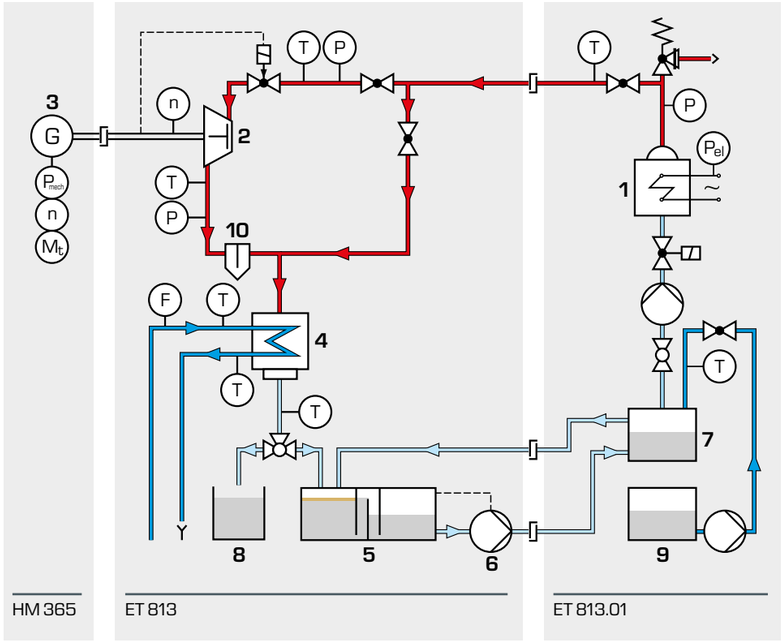

Steam is generated in the electric steam generator **1** and fed to turbine **2** via pipes. The turbine is loaded via the brake unit **3**. The exhaust steam from the steam engine then enters the water-cooled condenser **4**. The condensate is carried to the cascade tank **5**, where lubricating oil is separated from the steam engine. From here, pump **6** pumps the condensate into the feedwater tank **7** and the circuit is closed.

1 steam generator, **2** turbine,
3 brake unit, **4** condenser,
5 cascade tank, **6** pump,
7 feedwater tank,
8 condensate measuring tank,
9 fresh water tank,
10 oil separator;
steam,
cold water / fresh water,
feedwater

A single action two-cylinder steam engine with enclosed crank drive is the core element. Because of its enclosed design this kind of steam engine is called a steam motor.

A piston slide valve inside the cylinder cover controls the flow of steam. The crankshaft moves the piston slide valve via a small crank and a bell crank lever.

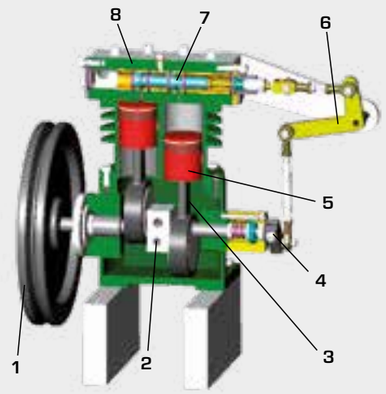

Steam engine

1 flywheel, **2** crankshaft, **3** connecting rod,
4 drive crank to operate the slide valve, **5** piston with piston rings,
6 bell crank lever, **7** piston slide valve, **8** cylinder cover

Software for data acquisition

The software enables display of measured values on a PC. Recording and saving of data history is possible.

With the help of spreadsheet programmes (e.g. MS Excel) saved data can be evaluated. The measured values are directly transmitted to the PC via USB.

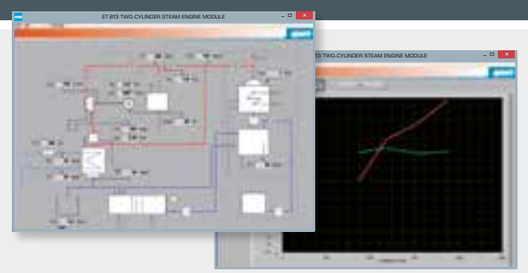

ET 813
Two-cylinder steam engine

The illustration shows a similar unit.

Learning objectives/experiments

- together with HM 365 and ET 813.01
  - determining the amount of steam generated, the mechanical power and the power consumption
  - calculating the overall efficiency
  - determining the heat dissipated in the condenser
  - recording the vapour pressure curve
  - effective output
  - specific steam consumption by the steam engine
  - thermal capacity of the boiler

Description

- **functioning of a two-cylinder piston steam engine**
- **energy balance of the steam power plant**
- **design of a complete steam power plant together with steam generator ET 813.01 and universal drive and brake unit HM 365**
- **part of the GUNT-FEMLine**

In a steam power plant, thermal energy is converted into mechanical energy, and ultimately into electrical energy. A steam power plant consists of a heat source for generating steam, a turbine or steam engine with generator, and a cooling device for condensing. The steam engine is used to convert thermal energy into mechanical energy.

The ET 813 steam engine, together with the brake unit HM 365 as a consumer of the electrical energy and the steam generator ET 813.01, forms a complete steam power plant.

The trainer includes a steam engine, a condenser and a condensate tank, and comprehensive instrumentation.

The steam engine is a sealed two-cylinder steam engine with 180° crank offset and single-acting plunger. It can be used to show the operating properties and functioning of a piston steam engine. Since the exhaust steam in piston steam engines contains entrained lubricating oil, an oil separator and a cascade tank ensure the condensate is cleaned as necessary, so that clean water can be fed back into the feedwater tank of the steam generator ET 813.01.

Sensors record the temperature, pressure, speed, and flow rate at all relevant points. The measured values can be read on digital displays. At the same time, the measured values can also be transmitted directly to a PC via USB. The data acquisition software is included.

ET 813
Two-cylinder steam engine

1 steam engine, 2 belt drive to HM 365, 3 condenser, 4 condensate tank, 5 condensate measuring tank, 6 sensor for cooling water flow rate, 7 displays and controls, 8 live steam supply from ET 813.01

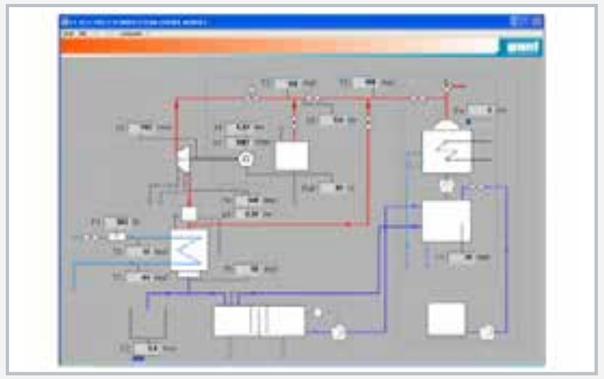

Software screenshot: process schematic

Experimental setup ready for operation: left: brake unit HM 365, centre: two-cylinder steam engine ET 813, right: steam generator ET 813.01

Specification

[1] two-cylinder piston steam engine
[2] atmospheric capacitor
[3] condensate tank as cascade tank with condensate pump
[4] steam engine loaded via brake unit HM 365
[5] sensor and display for temperature, pressure, flow rate, and speed
[6] determination of amount of steam via condensate
[7] steam supplied by steam generator ET 813.01
[8] GUNT software for data acquisition via USB under Windows 7, 8.1, 10

Technical data

Two-cylinder piston steam engine
- speed: max. 1000min^{-1}
- max. continuous power: 500W
- 2 cylinders
  - bore: 50mm
  - stroke: 40mm

Condensate pump
- power consumption: max. 60W
- max. flow rate: 2,9m^3/h
- max. head: 4m

Condenser
- transfer surface: 3800cm^2

Measuring ranges
- temperature: 7x 0...400°C
- pressure: 0...10bar / 0...1,6bar
- speed: 0...1200min^{-1}
- flow rate: 100...1000L/h (cooling water)

230V, 50Hz, 1 phase
230V, 60Hz, 1 phase; 120V, 60Hz, 1 phase
UL/CSA optional
LxWxH: 950x800x1750mm
Weight: approx. 200kg

Required for operation

water connection, drain, steam (8kg/h, 7bar)
PC with Windows recommended

Scope of delivery

1 trainer
3 measuring cups
1 stopwatch
1 set of accessories
1 GUNT software CD + USB cable
1 set of instructional material

ET 813.01
Electrical steam generator

Specification

[1] steam generator to supply ET 813
[2] electric heater
[3] extensive safety equipment
[4] feedwater: distilled or demineralised

Technical data

Heater
- heating power: 30kW

Steam generator
- pressure vessel volume: 53,5L
- steam output: 40kg/h
- operating pressure: 7bar at 170°C
- max. pressure: 8,5bar

Measuring ranges
- pressure: 0...10bar

400V, 50Hz, 3 phases
230V, 60Hz, 3 phases
LxWxH: 780x730x1760mm
Weight: approx. 240kg

Required for operation

drain

Scope of delivery

1 steam generator
1 set of hoses
1 manual

Description

- **electrically heated steam generator**
- **short heat-up time**
- **fully automatic operation**

The ET 813.01 electrically heated steam generator is intended to supply the ET 813 steam engine with saturated steam. The ET steam generator 813.01, in conjunction with the ET 813 steam engine and the HM 365 universal drive and brake unit, forms a complete steam power plant. The condensate is cleaned by the ET 813 trainer and fed back into the steam generator's feed tank, thereby creating a closed water circuit. The feedwater reservoir can be increased from an additional tank by using a submersible pump as required. The additional water must be distilled or demineralized. A flue gas discharge is not required since the heating is done electrically.

The steam generator is type tested and does not require specific permissions. The function is fully automatic. The short heat-up time until steam is produced allows elaborate experiments to be conducted in short periods of time. Extensive safety equipment ensures safe operation.

Basic knowledge

Gas turbines

Thermodynamic principle

The gas turbine works as an open cyclic process. Typical for an open cycle: the working medium is taken from the environment and fed back to it after the process is complete. The cyclic process of a gas turbine can be described by the following idealized changes of state:

- **adiabatic compression** of the cold gas with compressor **(A)** from ambient pressure p_1 to pressure p_2, associated with temperature rising from T_1 to T_2.
- **isobaric heating** of gas from T_2 to T_3 because of heat input. Heat input by burning fuel with oxygen from the air in combustion chamber **(B)**.
- **adiabatic expansion** of hot gas in a turbine **(C)** from pressure p_2 to p_1, associated with temperature decreasing from T_3 to T_4.

One part of the mechanical power generated by the turbine is used for driving the compressor. The rest is available as effective power for driving a generator **(D)** etc.

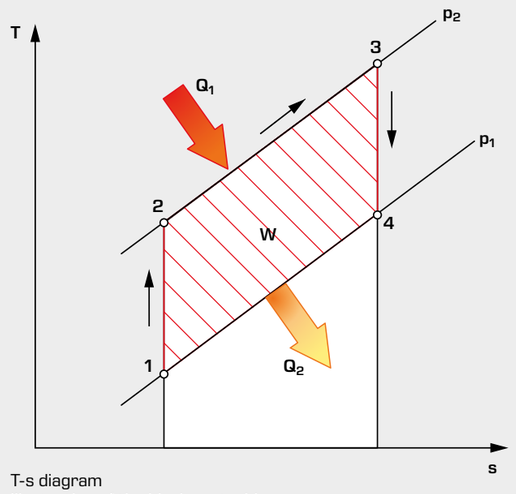

T-s diagram
Illustration of the ideal gas turbine process

Q_1 heat input, **Q_2** heat output, **W** useful work,
T temperature, **s** entropy;
1 - 2 compression, **2 - 3** heating, **3 - 4** expansion

Fields of application

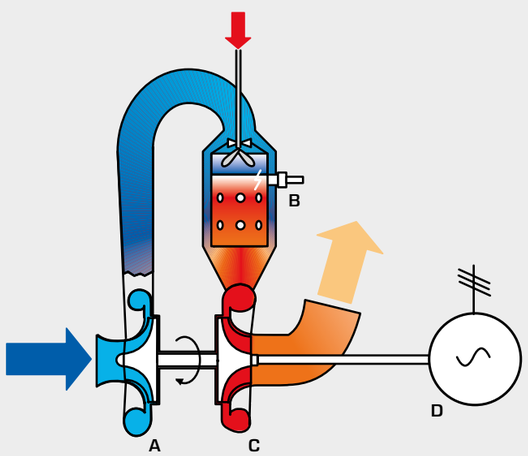

Schematic of a simple gas turbine system

A compressor, **B** combustion chamber,
C turbine, **D** generator;
arrows: **blue** air, **red** fuel, **orange** exhaust

Gas turbines are used when high power and lightweight are required:

- driving aircraft with propeller or jet engine
- driving fast ships, locomotives, or heavy motor vehicles
- driving generators in power plants
- driving compressors and pumps in the petroleum and natural gas industries

Quick starting is another advantage of gas turbines. They run up quickly to full load and therefore are often used as backup drives and for peak loads. In comparison with diesel engines, higher fuel consumption is a disadvantage.

Principle of a two-shaft gas turbine

A two-shaft gas turbine consists of two independent turbines. The first turbine (the high-pressure turbine) is coupled tightly to the compressor and drives the compressor. The second turbine (the power turbine) is not mechanically coupled with the high-pressure turbine, and generates the effective power of the system. A vehicle, a propeller, or a generator can be driven.

The advantage of the two-shaft gas turbine is that compressor and high-pressure turbine are driven at optimal speed for the respective power. Speed or torque at the power turbine can be adapted and optimised to the respective drive function. Vehicles require a variable speed, whereas a synchronous generator needs a constant speed.

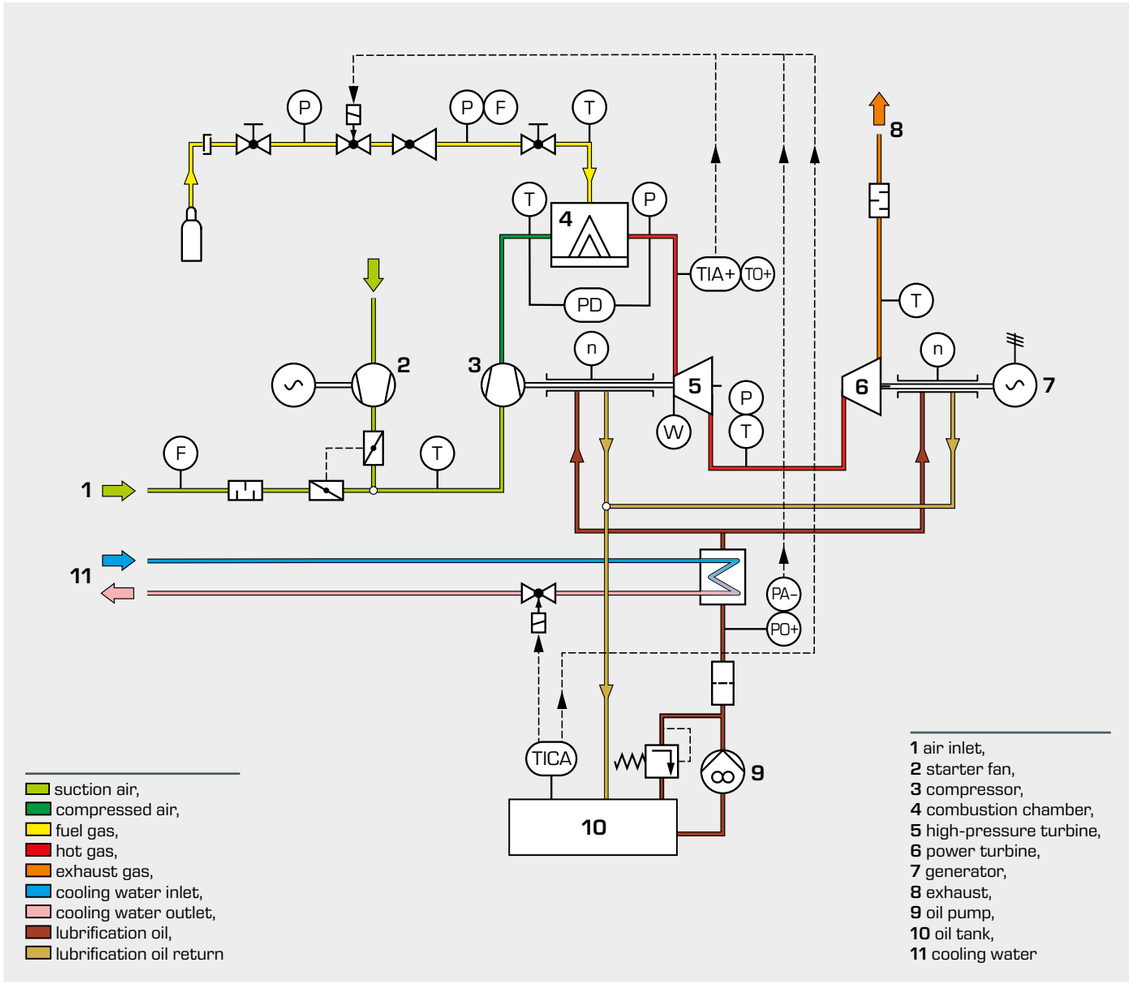

Process schematic of two-shaft gas turbine ET 794 with independent power turbine and generator

The turbine is operated with combustion gas. An electrically driven auxiliary compressor (starter fan) starts the turbine. At a certain minimum speed, fuel gas is fed into the combustion chamber and is electrically ignited. After reaching idle speed, the auxiliary compressor is turned off and the turbine runs on its own.

An oil circuit with a thermostatically controlled oil-to-water cooler, pump, and filter lubricates and cools the turbine bearings.

The turbine shuts down if the oil temperature is too high or the oil pressure is too low.

ET 794
Gas turbine with power turbine

Learning objectives/experiments

- determining the shaft power
- determining specific fuel consumption
- recording the characteristics of the power turbine
- determining the system efficiency

Description

- **simple model of a gas turbine**
- **two-shaft arrangement with high-pressure turbine and power turbine**
- **display and control panel with illustrative process schematic**
- **propane gas as fuel**

Gas turbines with free-running power turbines are used primarily as drive systems for widely varying power requirements in power plants and on board ships, locomotives, and motor vehicles.

The ET 794 trainer investigates the behaviour during operation of a system with two independent turbines in a two-shaft arrangement. One turbine (the high-pressure turbine) drives the compressor and the other turbine (the power turbine) supplies the effective power. Changes in power output in the power turbine have no influence on the compressor, which is able to keep running at optimum speed at the best efficiency point.

The trainer includes the following components: compressor, tubular combustion chamber and high-pressure turbine; fuel system; starter and ignition system; lubrication system; power turbine; generator; and measuring and control equipment.

The complete unit is called gas turbine. The gas turbine works as an open cyclic process, with the ambient air being drawn out and fed back in. The high-pressure turbine together with the compressor and the combustion chamber are called gas generator as they produce the required gas for the power turbine. To do so, the ambient air drawn in is brought to a higher pressure in the single-stage radial compressor. When the air enters the combustion chamber, only part of it is used for combustion. This air is decelerated with the aid of a turbulence generator such that the added fuel is able to burn with a stable flame. The greater portion of the air is used to cool the combustion chamber components, and is mixed into the combustion gases at the end of the combustion chamber. This reduces the gas temperature to the permissible inlet temperature of the high-pressure turbine.

The gas flows out of the combustion chamber into the single-stage radial high-pressure turbine and discharges a portion of its energy to the turbine. This energy drives the compressor.

In the power turbine, the gas discharges the remaining portion of its energy, which is converted into mechanical energy and drives a generator. The electrical energy generated is dissipated using braking resistors. The gas turbine is started with the aid of a start-up fan.

The speed, temperatures, and pressures and the mass flow rates of the air and fuel are recorded and displayed using sensors. Typical characteristic variables are determined.

ET 794
Gas turbine with power turbine

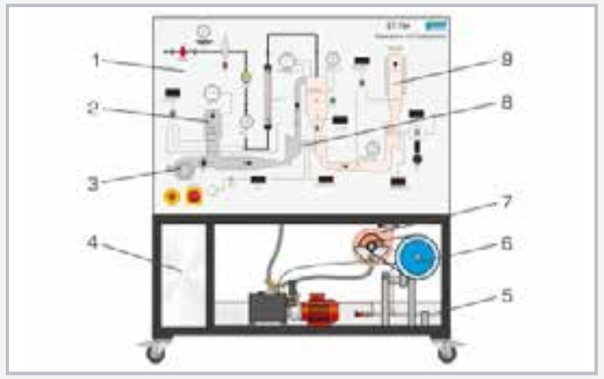

1 process schematic with displays and controls, 2 air intake with silencer, 3 start-up blower, 4 switch cabinet, 5 cooling water connection, 6 generator, 7 power turbine, 8 gas generator (compressor, combustion chamber, high-pressure turbine), 9 exhaust silencer

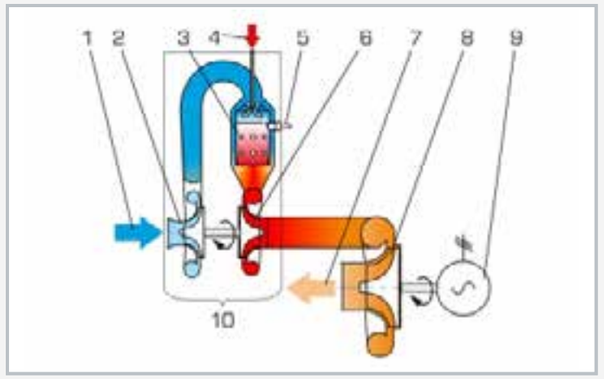

Function schematic of the system: 1 cold air, 2 compressor, 3 tubular combustion chamber, 4 fuel, 5 spark plug, 6 high-pressure turbine, 7 exhaust gas, 8 power turbine, 9 generator, 10 gas generator

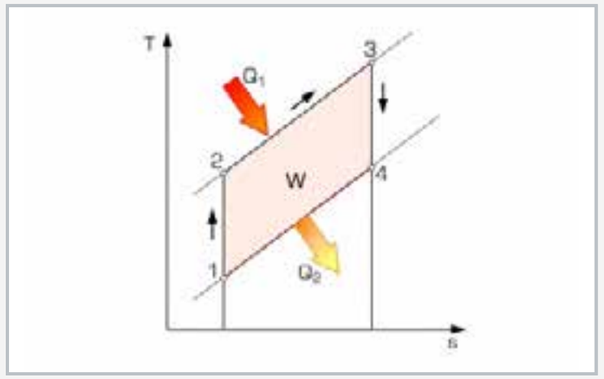

T-s diagram of open gas turbine process: 1 – 2 compression, 2 – 3 heat addition, 3 – 4 expansion; Q_1 heat input, Q_2 heat output, W useful work

Specification

[1] experiments relating to the function and behaviour during operating of a gas turbine in a two-shaft arrangement
[2] operation with power turbine and generator
[3] asynchronous motor with frequency converter as generator
[4] start-up fan to start the high-pressure turbine
[5] conversion of generated electrical energy into heat using four 600W braking resistors
[6] effective silencing at intake and exhaust for laboratory operation
[7] sensors record all relevant data visualised on displays in the process schematic

Technical data

Gas generator (compressor and high-pressure turbine)
- speed range: 60000...125000min^{-1}
- max. pressure ratio: 1:2.0
- max. mass flow rate (air): 0,115kg/sec
- max. fuel consumption: 120g/min

Power turbine
- speed range: 10000...40000min^{-1}
- mechanical power: 0...1,5kW
- electrical power: 0...1kW
- sound level at 1m distance: max. 80dB(A)
- temperature exhaust gas: 700°C

Measuring ranges
- temperature: 5x 0...180°C / 2x 0...1200°C
- speed: 0...199.999min^{-1}
- electric power: 0...1999W
- air inlet velocity: 0...28m/s
- fuel mass flow rate: 1,5...10,5kg/h
- fuel supply pressure: 0...25bar
- fuel nozzle pressure: 0...4bar
- combustion chamber pressure loss: 0...20mbar
- high-pressure turbine inlet pressure: 0...2,5bar
- power turbine inlet pressure: 0...250mbar

400V, 50Hz, 3 phases
400V, 60Hz, 3 phases
230V, 60Hz, 3 phases
LxWxH: 1500x670x1800mm
Weight: approx. 310kg

Required for operation

cooling water: 200L/h, propane gas: 4...15bar
ventilation 500m^3/h, exhaust gas routing

Scope of delivery

1 trainer
1 set of instructional material

ET 796
Gas turbine jet engine

The illustration shows the jet engine without the protective grating.

Description

- **gas turbine, operated as jet engine**
- **open gas turbine process**
- **GUNT software for data acquisition**

Jet engines are gas turbines which generate thrust. Jet engines are used on aircraft for propulsion due to their low weight and high performance.

The ET 796 trainer investigates the behaviour during operation of a jet engine.

ET 796 includes the following components: jet engine (with compressor, annular combustion chamber, turbine, and propelling nozzle), fuel system, starter and ignition system, and measurement and control equipment. The gas turbine works as an open cyclic process, with the ambient air being drawn out and fed back in.

In the jet engine, the ambient air drawn in is first brought to a higher pressure in the single-stage radial compressor. In the downstream combustion chamber, fuel is added to the compressed air and the resulting mixture is ignited. The temperature and flow velocity of the gas increase.

The gas flows out of the combustion chamber into the single-stage axial turbine and discharges a portion of its energy to the turbine. This turbine drives the compressor. In the propelling nozzle, the partially expanded and cooled gas expands to ambient atmospheric pressure and the gas accelerates to almost the speed of sound. The high-speed gas outflow generates the thrust. In order to reduce the outlet temperature, the exhaust gas stream is mixed with the ambient air in a mixing pipe. The gas turbine is started fully automatically with the aid of an electric starter.

The annular combustion chamber is between the compressor and the turbine. With optimum fuel utilisation, low pressure loss, and good ignition properties, the ring shape of this combustion chamber is typical of the design used in jet engines. The movable turbine platform, with a force sensor, enables measurement of the thrust.

The speed, temperatures, and mass flow rates of the air and fuel are recorded using sensors. The measured values can be read on digital displays. At the same time, the measured values can also be transmitted directly to a PC via USB. The data acquisition software is included.

Learning objectives/experiments

- behaviour during operation of a jet engine including start-up procedure
- determination of the specific thrust
- determination of the specific fuel consumption
- determination of lambda (fuel-air ratio)

ET 796
Gas turbine jet engine

1 mixing pipe, 2 jet engine, 3 turbine platform, 4 force sensor for thrust measurement, 5 fuel tank, 6 gas turbine controls, 7 switch cabinet

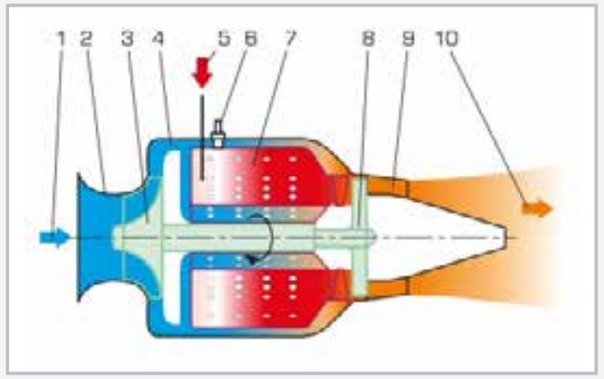

Process schematic: open gas turbine process
1 cold air, 2 housing, 3 compressor, 4 diffuser, 5 fuel, 6 spark plug, 7 annular combustion chamber, 8 turbine, 9 propelling nozzle, 10 exhaust gas

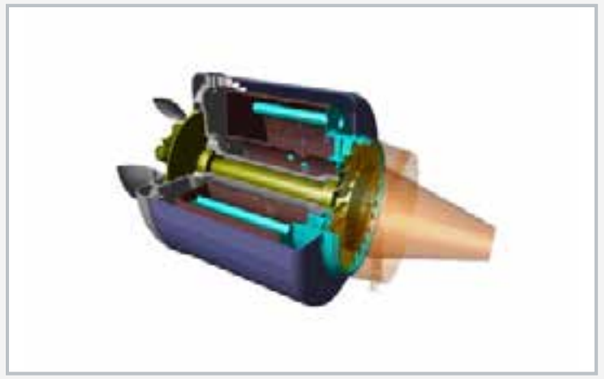

Model of a jet engine

Specification

[1] experiments relating to the function and behaviour during operation of a jet engine
[2] gas turbine with radial compressor and axial turbine as jet engine
[3] single-shaft engine
[4] protective grating for the jet engine
[5] turbine mounted on moving base with force sensor for thrust measurement
[6] electric starter for fully automatic start-up
[7] additional remote control for display and control of the jet engine
[8] GUNT software for data acquisition via USB under Windows 7, 8.1, 10

Technical data

Jet engine
- max. thrust: 82N at 117000min^{-1}
- speed range 35000...117000min^{-1}
- fuel consumption: max. 22L/h (full load)
- exhaust gas temperature: 610°C
- sound level at 1m distance: max. 130dB(A)

Fuel: kerosene or petroleum + turbine oil
Starting system: electric starter
1 tank for fuel: 5L

Measuring ranges
- differential pressure: 0...150mbar
- pressure: 0...2,5bar (combustion chamber)
- temperature: 2x 0...1200°C / 1x 0...400°C
- speed: 0...120000min^{-1}
- consumption: 0...25L/h (fuel)
- force: 0...+/-200N

230V, 50Hz, 1 phase
230V, 60Hz, 1 phase
120V, 60Hz, 1 phase
UL/CSA optional
LxWxH: 1230x800x1330mm
Weight: approx. 112kg

Required for operation

ventilation 1000m^3/h, exhaust gas routing required
PC with Windows recommended

Scope of delivery

1 trainer
1 turbine oil (250mL)
1 GUNT software CD + USB cable
1 set of instructional material
1 manufacturer's instruction manual (turbine)

Basic knowledge

Main elements of a compression refrigeration system

In a compression refrigeration system, heat is transported from one location to another due to a temperature difference. The principle of heat transport in a compression refrigeration system can be described using the example of the basic function of the four main components.

The **expansion valve** is located between the condenser and the evaporator. Its task is to expand the pressurised refrigerant. The expansion to a low pressure is necessary so that the refrigerant can evaporate again at low temperatures. A portion of the refrigerant evaporates due to the pressure reduction at the expansion valve, which results in a drop in temperature. In addition, the superheating of the refrigerant in the evaporator can be achieved by using the expansion valve. The superheating ensures complete evaporation of the refrigerant.

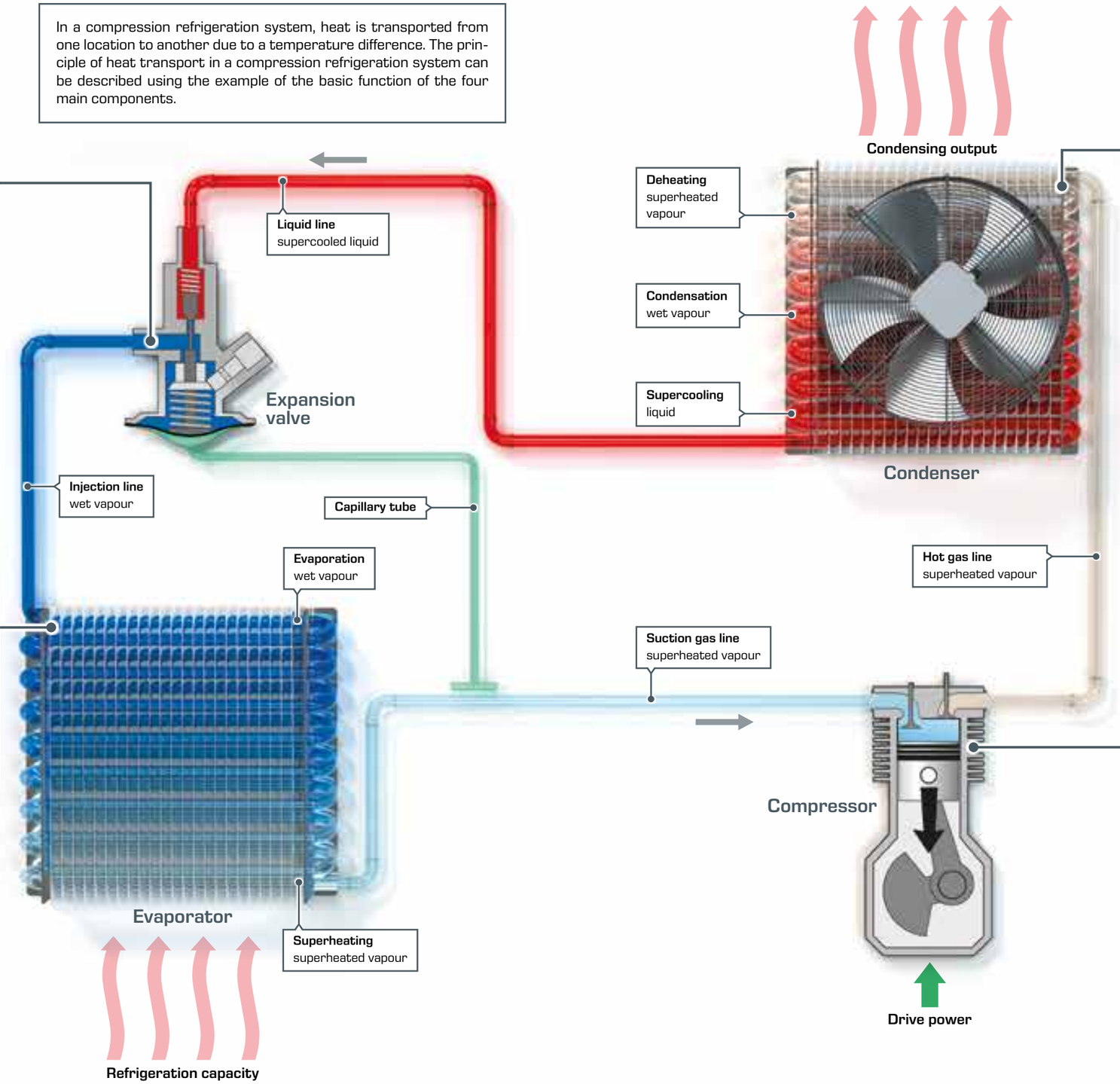

In the **condenser**, the heat is released from the refrigerant and transferred to the environment. The refrigerant vapour condenses due to heat dissipation. The refrigerant vapour must have a higher temperature than the environment. This required condensing temperature is directly proportional to the pressure generated by the compressor. Condensation takes place at constant high pressure.

In the **evaporator**, heat is extracted from the environment or a fluid and transferred to the refrigerant. The refrigerant evaporates during this process. In this case, the useful side is located in a refrigeration plant. The temperature of the refrigerant remains constant despite heat absorption. The absorbed energy is used for the phase change. In order for evaporation to be able to take place, the temperature of the liquid refrigerant must be lower than the fluid being cooled. This required evaporation temperature is directly proportional to the pressure which is specifically achieved by the suction effect of the compressor and the contraction of the expansion valve.

The **compressor** is the drive unit of a compression refrigeration system. It extracts the gaseous refrigerant from the evaporator, increases the pressure of the refrigerant vapour and conveys the gaseous refrigerant into the condenser. The compressor must raise the pressure of the refrigerant vapour to a sufficiently high pressure level so that the refrigerant can condense in the condenser by releasing heat.

Basic knowledge

Refrigeration cycle

The refrigeration cycle can be described by a sequence of state changes of a refrigerant. This sequence runs periodically and always achieves the initial state (cyclic process). In refrigeration, the state variables such as pressure, temperature and density are important as is the dependence of these state variables on each other.

The thermodynamic processes in the refrigeration cycle are complex. Calculation using formulae and tables requires a considerable amount of effort due to the three different states of the refrigerant from liquid, boiling and gaseous. Therefore, for reasons of simplification, the log p-h diagram was introduced.

Using a log p-h diagram, the various state variables can be represented graphically according to their dependencies. The thermodynamic state variables can be read directly at each state point and are available for further calculations. Heat quantities, technical work or pressure differences of a change of state are shown as measurable lines. Using the log p-h diagram greatly simplifies thermodynamic calculations and is essential for understanding how refrigeration plants work.

On the basis of this knowledge, our software for refrigeration equipment displays the respective log p-h diagram in real time. Changes to operating parameters can be read directly in the diagram and allow a valuable insight into the formation of the thermodynamic states, which otherwise can only be appreciated statically.

In general, a log p-h diagram shows the aggregate state of a substance, depending on pressure and heat. For refrigeration, the diagram is reduced to the relevant regions of **liquid** and **gaseous** as well as their **mixed form**.

The vertical axis shows the logarithmic pressure and the horizontal axis shows the specific enthalpy with linear scaling. Accordingly, the isobars are horizontal and the isenthalps are vertical. The logarithmic scaling makes it possible to represent processes with large pressure differences.

The saturated vapour curve and the boiling point curve meet at the critical point **K**.

The log p-h diagram shows the thermodynamic state variables in the respective phase.

- pressure **p**
- specific enthalpy **h**
- temperature **T**
- specific volume **v**
- specific entropy **s**
- gas content **x**

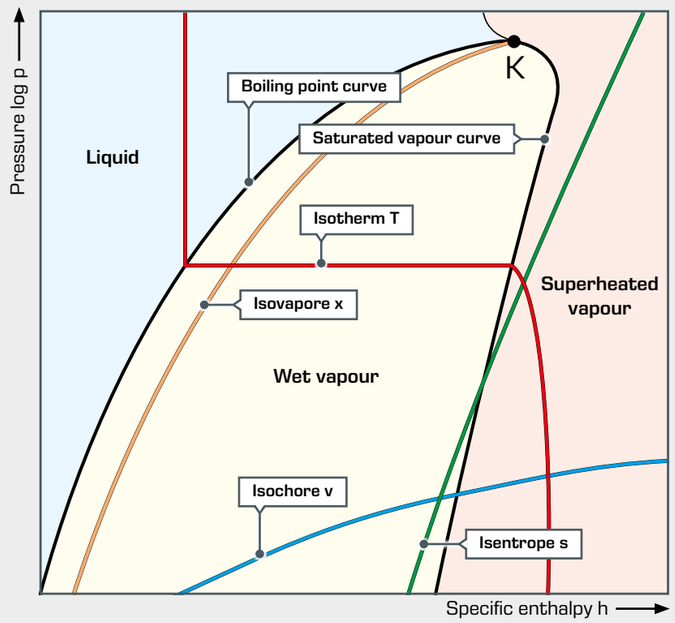

The refrigeration cycle in the log p-h diagram

The distinctive feature of the refrigeration cycle is that it runs counter-clockwise, i.e. opposite to the joule or steam cycle. A change of state occurs when the refrigerant flows through one of the four main components of the refrigeration plant. The actual refrigeration cycle consists of the following changes of state:

1 – 2	polytropic compression to the condensing pressure (for comparison 1 – 2' isentropic compression)
2 – 2''	isobaric cooling, deheating of the superheated vapour
2'' – 3'	isobaric condensation
3' – 3	isobaric cooling, supercooling of the liquid
3 – 4	isenthalpic expansion to the evaporation pressure
4 – 1'	isobaric evaporation
1' – 1	isobaric heating, superheating of the vapour

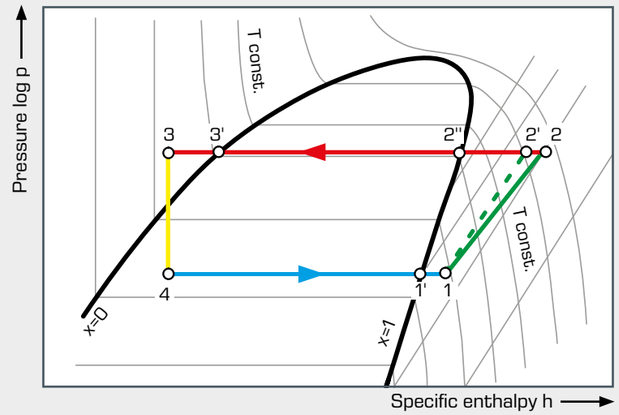

Refrigeration cycle in the log p-h diagram

compressor, condenser, expansion valve, evaporator

In addition, pressure losses also occur in the actual refrigeration cycle, so that evaporation and condensation do not take place exactly horizontally (isobarically).

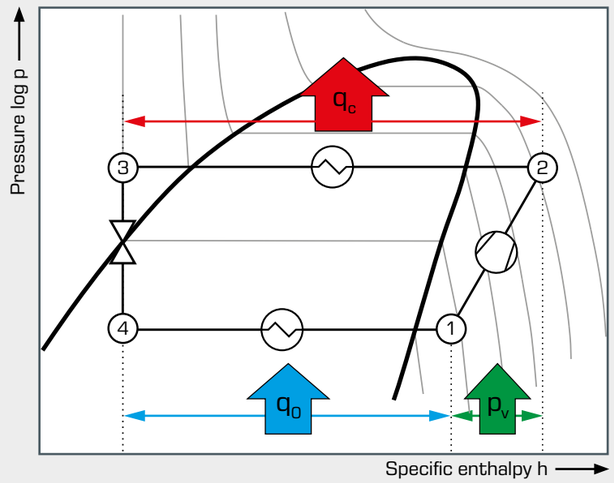

The **specific amounts of energy** that can be absorbed and released to reach the state points are marked as lines in the log p-h diagram. The specific enthalpy **h** can be read for each separate state point directly from the log p-h diagram.

If the mass flow rate of the refrigerant is known, the associated **thermal output** can be calculated by means of the specific enthalpy at the respective state point.

- the line $h_1 - h_4 = q_0$ corresponds to the cooling and results in the **refrigeration capacity** by multiplication with the the mass flow rate.
- the line $h_2 - h_1 = p_v$ corresponds to the technical work of the compressor, which is actually transferred to the refrigerant.
- the line $h_2 - h_3 = q_c$ corresponds to the emitted heat and results in the **condenser capacity** by multiplication with the the mass flow rate. It is the waste heat from a refrigeration plant.

ET 165
Compression refrigeration system with drive unit HM 365

Part of the GUNT-FEMLine

- principle of function of a compression refrigeration system
- open compressor with variable speed
- measuring the mechanical drive power
- determination of the compressor efficiency
- effect of the compressor flow rate on the refrigeration circuit
- drive via the universal drive and brake unit HM 365

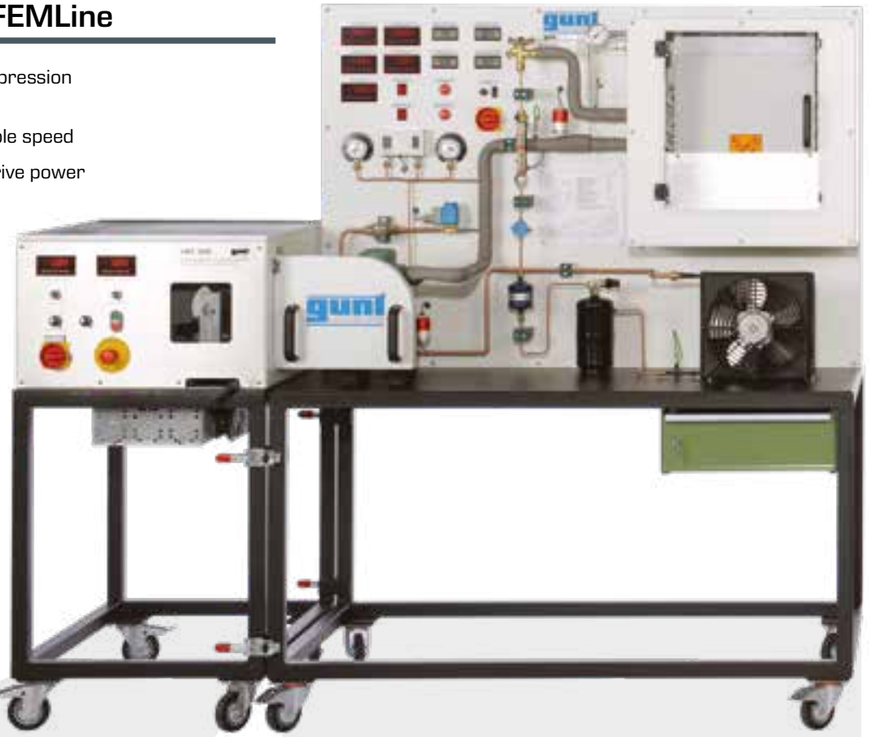

HM 365 Universal drive and brake unit

ET 165 Refrigeration system with open compressor

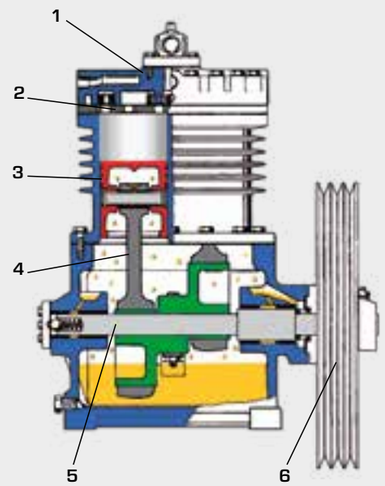

Cross-section through an open compressor:

1 cylinder cover, **2** valve plate, **3** piston, **4** piston rod, **5** excenter shaft, **6** pulley

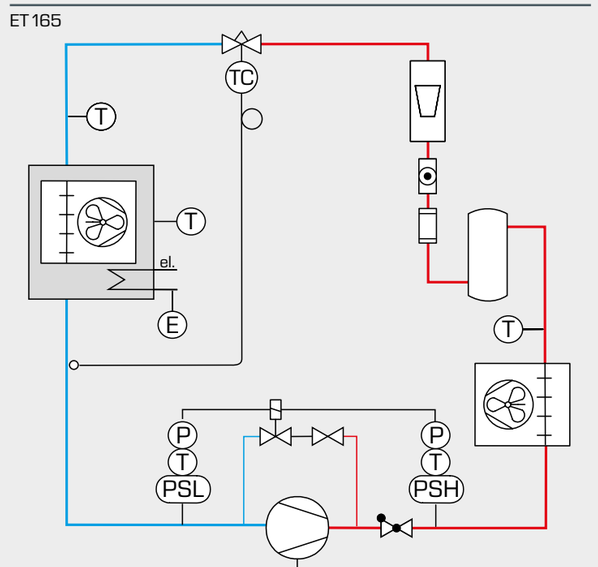

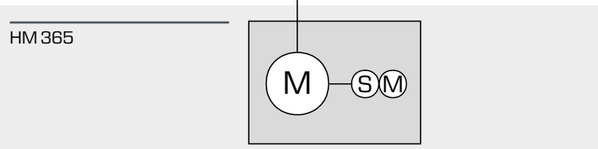

The open compressor of ET 165 is, unlike the hermetic compressor, driven via an external electric motor. Open compressors are used in commercial cooling for medium to high capacities. An advantage is that the flow rate can be easily adjusted via the drive speed. This is done via a speed-controlled electric motor or via different transmissions of the belt drive.

The refrigeration circuit of ET 165 consists of an open compressor, an air-cooled condenser, an expansion valve and an evaporator in a refrigeration chamber. To represent a cooling load, the refrigeration chamber can be heated electrically. Pressure switches protect the compressor against too high or too low pressures by opening a bypass to the compressor.

The drive speed of the compressor is adjustable. This examines the effect of different delivery capacities on the refrigeration system. By measuring the drive speed and drive torque the compressor can be thoroughly examined, e.g. determining the efficiency.

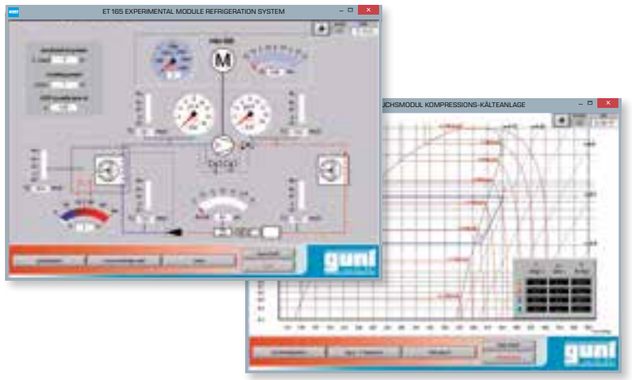

The software enables the clear representation of the measuring data on the PC. Time graphs can be recorded and stored. A very useful property is the display of the cyclic process in the log p-h diagram. Using a spreadsheet program (e.g. MS Excel) the stored data can be analysed. The measured data are transferred to the PC via a USB interface.

ET 165
Refrigeration system with open compressor

Description

- **capacity measurement at the open compressor with variable speed**
- **refrigeration chamber with adjustable cooling load**
- **part of the GUNT-FEMLine**

ET 165 enables basic experiments in the field of refrigeration. The trainer includes a closed refrigeration circuit with open compressor, a condenser with fan, a thermostatic expansion valve and an evaporator in a refrigeration chamber with transparent door. A fan in the refrigeration chamber ensures an even temperature distribution. A cooling load is simulated by an adjustable heater in the refrigeration chamber. The drive unit HM 365 drives the compressor via a V-belt. The compressor speed is set at the HM 365. The circuit is equipped with a combined pressure switch for the delivery and intake side of the compressor.

All relevant measured values are recorded by sensors. Digital displays indicate the measured values. The simultaneous transmission of the measured values to a data recording software enables convenient analysis and the representation of the process in the log p-h diagram. The software also displays the important characteristics variables of the process, such as the refrigeration capacity and the coefficient of performance.

Learning objectives/experiments

- fundamentals of refrigeration
- design and components of a refrigeration system
  - open compressor with drive
  - condenser
  - evaporator
  - thermostatic expansion valve
  - pressure switch
- determination of important characteristic variables
  - coefficient of performance
  - compressor capacity
  - refrigeration capacity
  - compression ratio
  - volumetric efficiency
- representation of the thermodynamic cycle in the log p-h diagram
- determination of the compressor efficiency
- effect of the compressor flow rate on the refrigeration circuit

ET 165
Refrigeration system with open compressor

1 expansion valve, 2 displays and controls, 3 pressure switch, 4 flow meter, 5 compressor, 6 condenser, 7 receiver, 8 refrigeration chamber

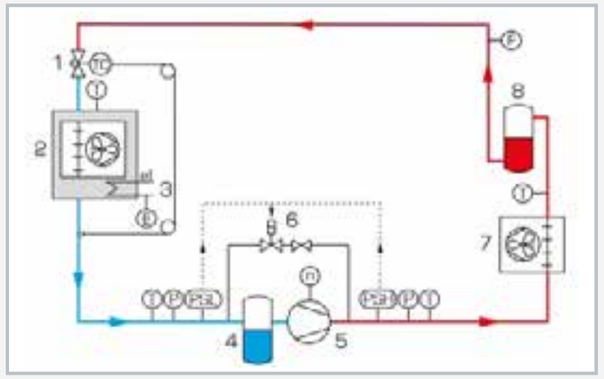

1 expansion valve, 2 refrigeration chamber, 3 heater, 4 suction line receiver, 5 compressor with connection to the HM 365, 6 solenoid valve, 7 condenser, 8 receiver; T temperature, P pressure, PSL, PSH pressure switch, F flow rate, n speed, E electric power; blue: low pressure, red: high pressure

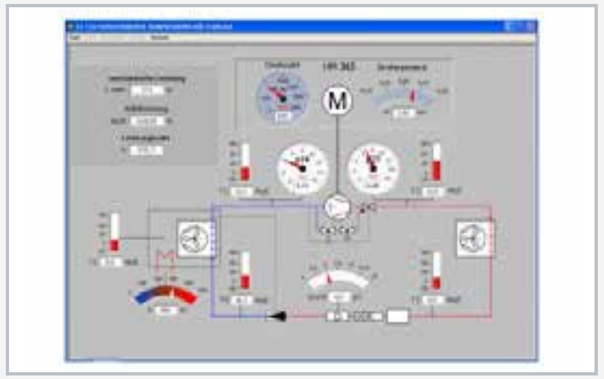

Software screenshot: process schematic

Specification

[1] investigation of a refrigeration circuit with speed-controlled compressor
[2] refrigeration circuit with open compressor, condenser, thermostatic expansion valve and evaporator in refrigeration chamber
[3] cooling load in the refrigeration chamber adjustable via heater
[4] drive and speed adjustment of the open compressor via HM 365
[5] condenser and evaporator with fan
[6] pressure switch to protect the compressor
[7] digital displays for pressure, temperature, flow rate, power and speed
[8] GUNT software for data acquisition via USB under Windows 7, 8.1, 10
[9] refrigerant R134a, CFC-free

Technical data

Open compressor
- refrigeration capacity: approx. 845W (at speed: 975min^{-1} and -10/40°C)
- speed: 500...1000min^{-1}

Condenser with fan transfer area: 2,5m^2
- capacity: approx. 1935W at 25°C air temperature (ambient) / Δt=15°C

Evaporator
- transfer area: 3,62m^2
- capacity: 460W at 3°C air temperature (chamber) / Δt=13°C

Heater power: 500W

Measuring ranges
- temperature: 4x -5...105°C, 1x -50...250°C
- pressure: -1...15bar, -1...24bar
- speed: 1x 0...1000min^{-1}
- flow rate: R134a: 1x 2...15g/s
- power: 1x 0...500W

230V, 50Hz, 1 phase
230V, 60Hz, 1 phase
120V, 60Hz, 1 phase
UL/CSA optional
LxWxH: 1470x800x1850mm
Weight: approx. 185kg

Required for operation

PC with Windows recommended

Scope of delivery

1 trainer
1 V-belt
1 GUNT software CD + USB cable
1 set of instructional material

ET 430
Refrigeration system with two-stage compression

Description

- **compression refrigeration system with two-stage compression to achieve particularly low temperatures**
- **injection intercooling**
- **heat exchanger for additional refrigerant supercooling**
- **real-time representation of the process in the log p-h diagram of the software**

Refrigeration systems with two-stage compression are used for the generation of particularly low temperatures. At very low temperatures large pressure differences are required between the evaporator and condenser. In a compressor the volumetric efficiency drops significantly at high pressure ratios.

Therefore, two compressors are connected in series, with each compressor only having a relatively low pressure ratio. This makes a more favourable dimensioning of the low pressure stage compressor possible. Due to the large specific volume it requires a larger capacity at lower drive power.

In addition, intercooling between the low pressure compressor (LP) and the high pressure compressor (HP) reduces the outlet temperature of the HP compressor to harmless values and improves the efficiency of the compression.

The trainer ET 430 uses injection intercooling. A small amount of liquid refrigerant is injected from the receiver into the outlet line of the LP compressor. The liquid refrigerant evaporates and thus cools the intake gas for the HP compressor. Via an add-on heat exchanger in the injection cooler the supercooling of the liquid refrigerant can be increased upstream of the expansion valve. This allows for an increase in the evaporator capacity.

Valves allow for the injection intercooling or the heat exchanger for refrigerant supercooling to be switched off. This can demonstrate their effect on the system.

All relevant measured values are recorded by sensors and displayed. The simultaneous transmission of the measurements to the GUNT software enables analysis and the representation of the process in the log p-h diagram in real time. Additionally, two flow meters indicate the total volumetric flow rate and the volumetric flow rate in the intercooling.

Learning objectives/experiments

- design and function of a refrigeration system with two-stage compression and injection intercooling
- effect of the inlet temperature at the HP compressor on the efficiency of the compression
  - with intercooling
  - without intercooling
- effect of the additional refrigerant intercooling
- distribution of the compressor pressure ratios
- represent and understand the refrigeration cycle process in the log p-h diagram

ET 430
Refrigeration system with two-stage compression

1 expansion valve, 2 refrigeration chamber, 3 displays and controls, 4 pressure switch, 5 injection valve, 6 injection cooler, 7 LP compressor, 8 HP compressor, 9 receiver, 10 flow meter, 11 heat exchanger, 12 condenser

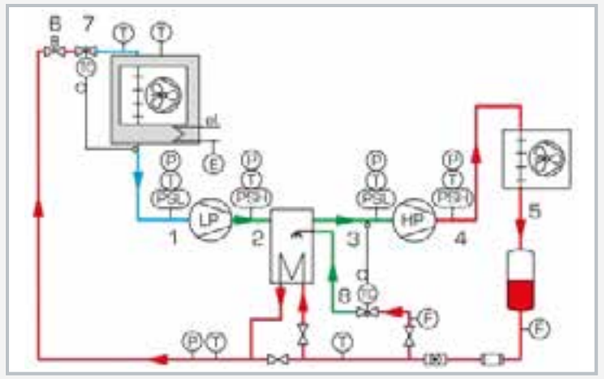

1-2 LP compression, 2-3 intercooling, 3-4 HP compression, 4-5 condensation, 5-6 supercooling, 6-7 expansion, 7-1 evaporation;
T temperature, P pressure, E electrical power, F flow rate, PSL, PSH pressure switch

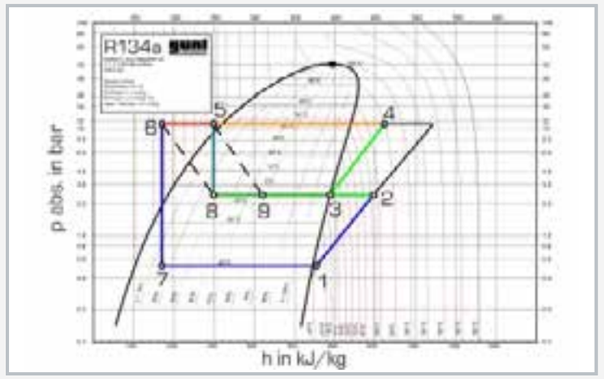

log p-h diagram of a two-stage refrigeration system with injection intercooling (for process steps see process schematic)

Specification

[1] refrigeration system with two-stage compression
[2] hermetic low and high pressure compressors
[3] adjustable intercooling via refrigerant injection
[4] heat exchange for additional supercooling of the liquid refrigerant
[5] closed refrigeration chamber contains evaporator with fan and adjustable electric heater as cooling load
[6] digital display for temperatures, drive power of the compressors and cooling load power
[7] real-time representation of the process in the log p-h diagram of the software
[8] GUNT software for data acquisition via USB under Windows 7, 8.1, 10
[9] refrigerant R404a, CFC-free

Technical data

Low pressure compressor (LP)
- displaced volume: 25,93cm^3
- power consumption: 550W
- refrigeration capacity: 1744W at -10/32°C

High pressure compressor (HP)
- displaced volume: 8,86cm^3
- power consumption: aprrox. 275W
- refrigeration capacity: 583W at -10/32°C

Measuring ranges
- flow rate: 1x 2...29L/h, 1x 4...40L/h
- pressure: 1x -1...15bar, 2x -1...24bar
- temperature: 8x -75...125°C
- power:
  - 1x 0...562W (heater)
  - 1x 0...750W (LP compressor)
  - 1x 0...2250W (HP compressor)

230V, 50Hz, 1 phase
230V, 60Hz, 1 phase
230V, 60Hz, 3 phases
UL/CSA optional
LxWxH: 1900x790x1900mm
Weight: approx. 283kg

Required for operation

PC with Windows recommended

Scope of delivery

1 trainer
1 GUNT software CD + USB cable
1 set of instructional material

ET 352
Vapour jet compressor in refrigeration

Learning objectives/experiments

- understanding compression refrigeration systems based on the vapour jet method
- clockwise and anticlockwise Rankine cycle
- energy balances
- calculation of the coefficient of performance of the refrigeration circuit
- thermodynamic cycle in the log p-h diagram
- operating behaviour under load
- solar thermal vapour jet refrigeration

Description

- **refrigeration system with vapour jet compressor**
- **cold production using heat**
- **transparent condenser and evaporator**
- **together with ET 352.01 and HL 313: using solar heat as drive energy for the vapour jet compressor**

Unlike standard compression refrigeration systems, vapour jet refrigeration machines do not have a mechanical but a vapour jet compressor. This makes it possible to use different heat sources for cold production. Such sources could e.g. be solar energy or process waste heat.

The system includes two refrigerant circuits: one circuit is used for cold production (refrigeration cycle), the other circuit is used for the generation of motive vapour (vapour cycle).

The vapour jet compressor compresses the refrigerant vapour and transports it to the condenser. A transparent tank with a water-cooled pipe coil serves as condenser.

In the refrigeration cycle some of the condensed refrigerant flows into the evaporator connected to the intake side of the vapour jet compressor. The evaporator is a so-called flooded evaporator where a float valve keeps the filling level constant. The refrigerant absorbs the ambient heat or the heat from the heater and evaporates. The refrigerant vapour is aspirated by the vapour jet compressor and compressed again.

In the vapour cycle a pump transports the other part of the condensate into a vapour generator. An electrically heated tank with water jacket evaporates the refrigerant. The generated refrigerant vapour drives the vapour jet compressor. Alternatively to the electric heater, solar heat can be used as drive energy by using ET 352.01 and the solar thermal collector HL 313.

Relevant measured values are recorded by sensors, displayed and can be processed onto a PC. The heater power at the evaporator is adjustable. The cooling water flow rate at the condenser is adjusted using a valve.

ET 352
Vapour jet compressor in refrigeration

1 manometer, 2 pressure switch, 3 displays and controls, 4 vapour generator, 5 evaporator, 6 pump, 7 cooling water connections, 8 flow meter, 9 condenser, 10 vapour jet compressor

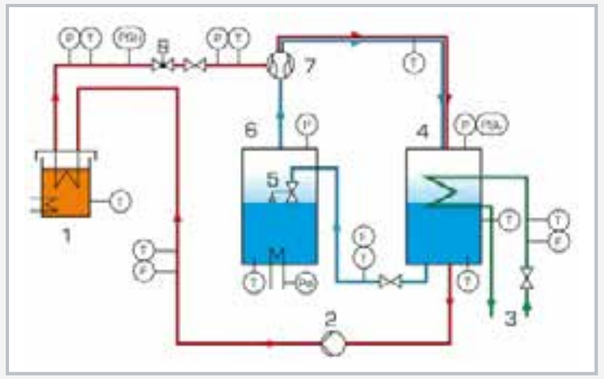

1 vapour generator, 2 pump, 3 cooling water connections, 4 condenser, 5 float valve, 6 evaporator, 7 vapour jet compressor; T temperature, P pressure, PSL, PSH pressure switch, F flow rate, P_{el} power; red: vapour cycle, blue: refrigeration cycle, green: cooling water

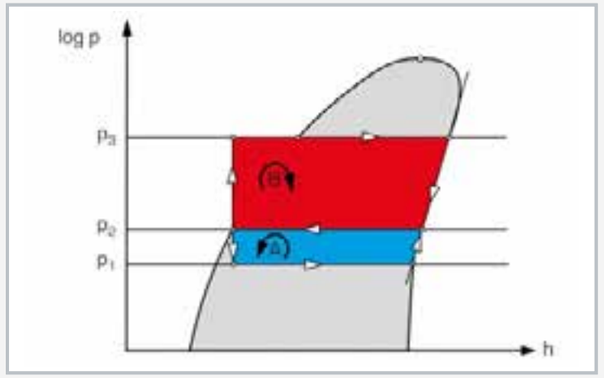

log p-h diagram: A refrigeration cycle, B vapour cycle, p_1 pressure in the evaporator, p_2 pressure in the condenser, p_3 pressure in the vapour generator

Specification

[1] investigation of a vapour jet compressor
[2] refrigeration circuit with condenser, evaporator and vapour jet compressor for refrigerant
[3] vapour circuit with pump and vapour generator for operating the vapour jet compressor
[4] transparent tank with water-cooled pipe coil as condenser
[5] transparent tank with adjustable heater as evaporator
[6] flooded evaporator with float valve as expansion element
[7] vapour generator with heated water jacket (electrically or solar thermally using ET 352.01, HL 313)
[8] refrigerant Solkatherm SES36, CFC-free
[9] GUNT software for data acquisition via USB under Windows 7, 8.1, 10

Technical data

Vapour jet compressor
- d_{min} convergent-divergent nozzle: approx. 1,7mm
- d_{min} mixing jet: approx. 7mm

Condenser
- tank: approx. 3,5L
- pipe coil area: approx. 0,17m²

Evaporator
- tank: approx. 3,5L
- heater power: 4x 125W

Vapour generator
- refrigerant tank: approx. 0,75L
- water jacket: approx. 9L
- heater power: 2kW

Pump
- max. flow rate: approx. 1,7L/min
- max. head: approx. 70mWS

Measuring ranges
- temperature: 12x -20...100°C
- pressure: 2x 0...10bar; 2x -1...9bar
- flow rate: 3x 0...1,5L/min
- power: 1x 0...750W, 1x 0...3kW

230V, 50Hz, 1 phase
230V, 60Hz, 1 phase, 230V, 60Hz, 3 phases
UL/CSA optional
LxWxH: 1460x790x1890mm
Weight: approx. 225kg

Required for operation

water connection, drain, PC with Windows recommended

Scope of delivery

1 trainer
1 set of accessories
1 refrigerant (Solkatherm SES36, 4kg)
1 GUNT software CD + USB cable
1 set of instructional material

5

Equipment series

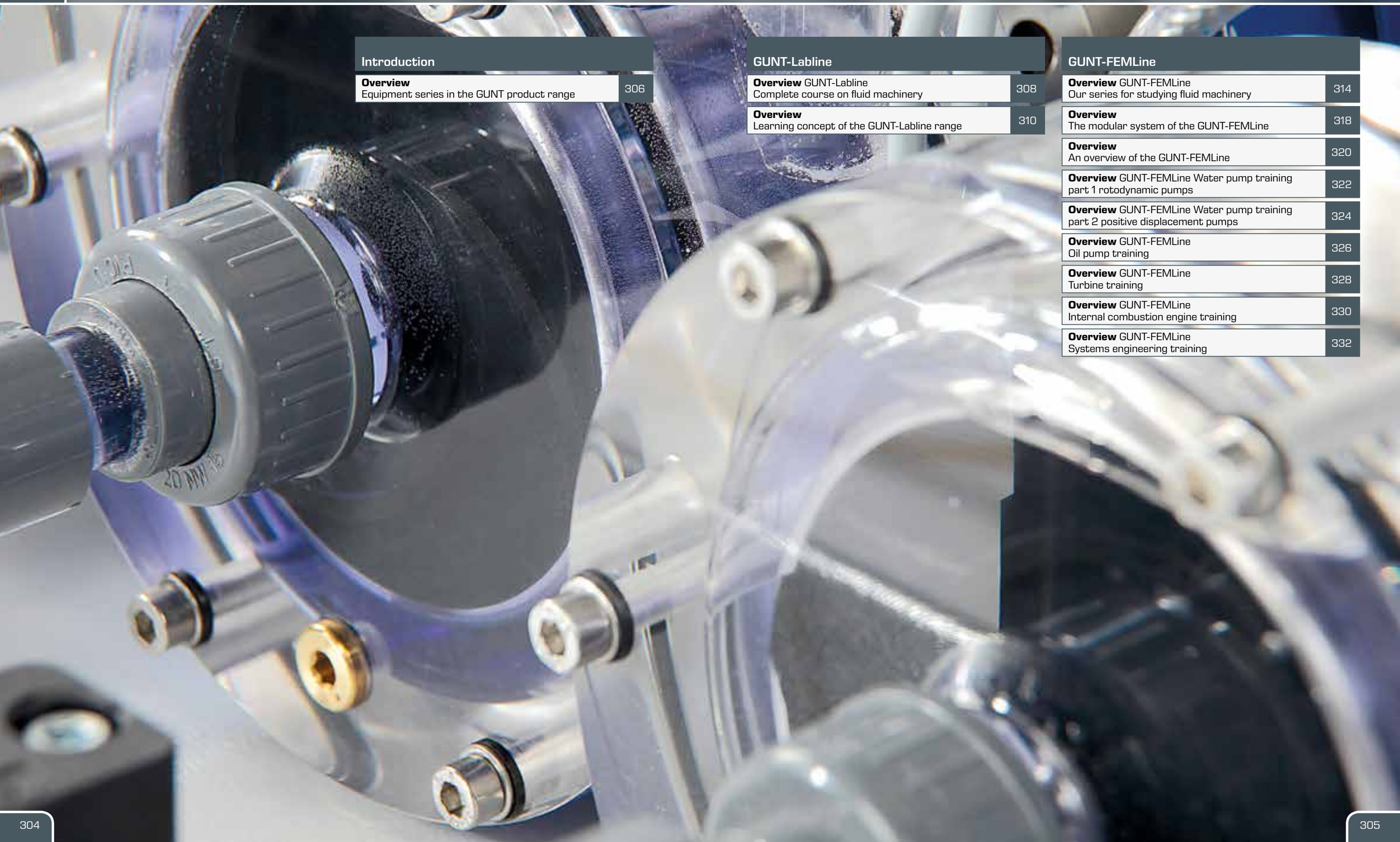

Introduction

Overview
Equipment series in the GUNT product range 306

GUNT-Labline

Overview GUNT-Labline
Complete course on fluid machinery 308

Overview
Learning concept of the GUNT-Labline range 310

GUNT-FEMLine

Overview GUNT-FEMLine
Our series for studying fluid machinery 314

Overview
The modular system of the GUNT-FEMLine 318

Overview
An overview of the GUNT-FEMLine 320

Overview GUNT-FEMLine Water pump training
part 1 rotodynamic pumps 322

Overview GUNT-FEMLine Water pump training
part 2 positive displacement pumps 324

Overview GUNT-FEMLine
Oil pump training 326

Overview GUNT-FEMLine
Turbine training 328

Overview GUNT-FEMLine
Internal combustion engine training 330

Overview GUNT-FEMLine
Systems engineering training 332

Equipment series in the GUNT product range

In the previous chapters we outlined the fundamentals and practical applications of **fluid machinery**. The final chapter of the catalogue, chapter 5, provides an overview of the available equipment series from the fluid machinery product range.

Catalogue 4a

Chapter 1 Fundamentals and introduction

Fluid mechanics	Thermodynamics	Machine dynamics

Application and practical aspects

Chapter 2	Chapter 3	Chapter 4
Driving machines	Driven machines	Power plants and applied cyclic processes

Chapter 5 Equipment series

Labline

A Labline example:
HM 280 Experiments with a radial Fan

FEMLine

Base module HM 365 Universal drive and brake unit (left)
HM 365.10 Supply unit for water pumps (right side, with pump)

GUNT developed equipment series with two goals in mind:

- on one hand a series covers an entire subject area
- on the other hand detailed knowledge of individual requirements and aspects of the subject area can be conveyed

How do the GUNT equipment series achieve this goal?

- definition of one subject area per series
- emphasis on different questions of the subject area
- development of experimental units corresponding to the subject area
- the different devices of a series are all thematically related to each other

Therefore each device

- is dedicated to a specific topic and a related set of questions
- forms a self-contained unit

Advantages of series:

- detailed understanding and knowledge of a subject area
- experimental results of different devices can be directly compared
- regardless of spatial requirements, operation of the device is secured by means of a self-contained system
- any of the experimental units that are part of the series can be selected and combined as you please
- as your laboratory grows, you can continue to add other devices to complement the series

Labline and FEMLine
Why does the GUNT programme include TWO series on the subject area of fluid machinery?
The concepts of the two series are very different:

Labline

- small, easy to handle experimental units
- easy transportation
- transparent housings
- the same device can be used both for to give demonstrations in the lecture hall or the classroom and to perform experiments in the lab
- the experimental units are compact and inexpensive, allowing you to furnish your lab with more experimental workstations

FEMLine

- the FEMLine experimental units are much larger
- high level of practical relevance through use of real fluid machinery
- very versatile range of experiments
- the comprehensive and in-depth range of experiments using industrial components completely covers an individual subject area

Labline turbines

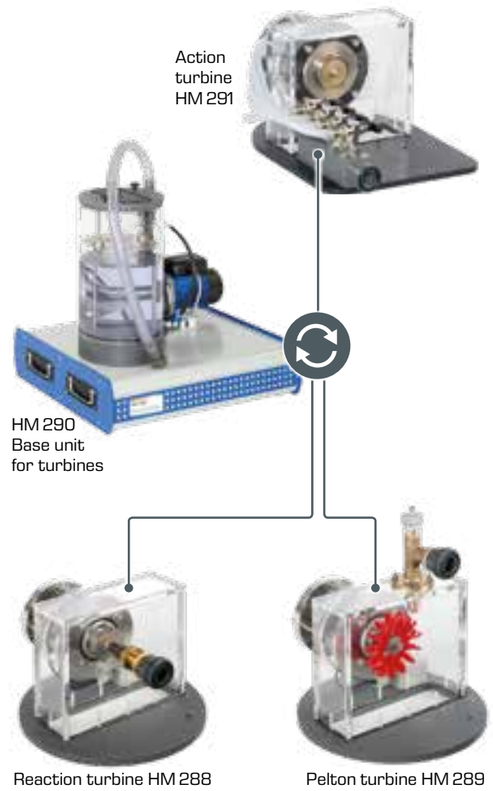

FEMLine turbines

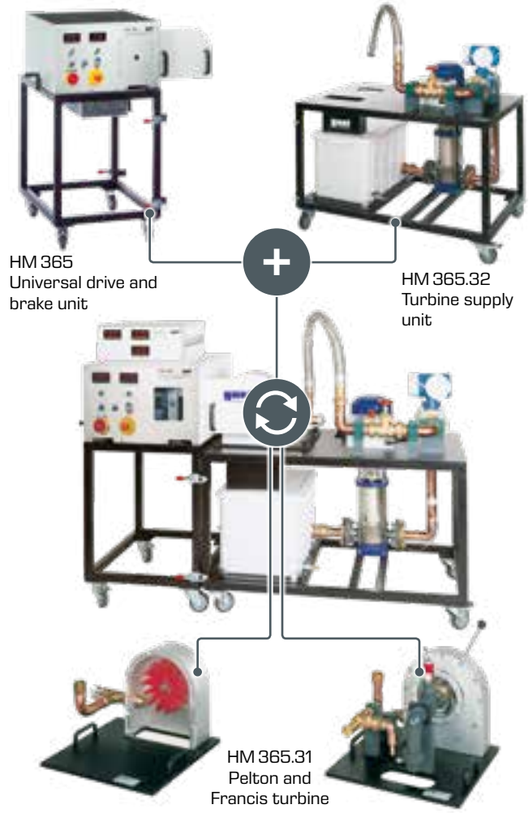

Options for combining the base unit with different experimental units

GUNT-Labline
Complete course on fluid machinery

The GUNT-Labline "Fluid Energy Machines" allows an easy introduction to a complex subject. The experimental units offer basic experiments to familiarise students with the function, the operating behaviour and the most important characteristics of positive displacement and turbomachines. Transparent housings allow observation during operation. The GUNT-Labline comes with microprocessor-based metrology and a device-specific GUNT software for control and data acquisition via USB.

Advantages of the device conception:

- the compact design enables mobile use of the experimental units
- easy transport thanks to handles on the tabletop devices and rollers on the frame
- the same device can be used for demonstration purposes in the lecture hall or the classroom or to conduct experiments in the laboratory
- only a power connection is required for operation of the equipment
- no external water supply required thanks to closed water circuits
- despite complex metrology and software analysis, the devices do not require any complicated wiring: a USB connection to the computer is sufficient
- transparent housing and clear arrangement provide an excellent insight on the functions of the components and on the procedures for operation of the equipment
- damage caused by incorrect operation is very rare thanks to the way in which the devices are designed
- the compact size of the experimental units and the low price make it easy to fit out a classroom or laboratory with a larger number of experiment workstations

Ideas in the didactic concept:

- a self-contained course on the topic of fluid energy machines
- the experimental units of one sub-field complement each other in terms of learning objectives
- each experimental unit forms a self-contained learning unit
- effective learning in small groups (2-3 people)
- the direct proximity to the experimental unit encourages inquisitive exploration of the technology
- development of characteristic properties of various types of machines
- comparison and evaluation of different types of machines

In addition, the common fundamentals of the experimental techniques can be practised, for example:

- selecting the chart axes
- selecting the increment when varying parameters
- waiting for the steady state
- averaging over time with fluctuating readings, etc.

Experiments for different fans and a radial compressor

HM 280
Experiments with a radial fan

HM 282
Experiments with an axial fan

HM 292
Experiments with a radial compressor

Experiments for different water turbines

HM 289
Experiments with a Pelton turbine

HM 291
Experiments with an action turbine

HM 287
Experiments with an axial turbine

HM 288
Experiments with a reaction turbine

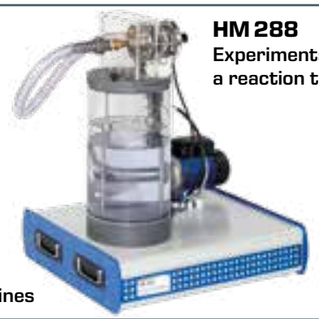

HM 290
Base unit for turbines

Experiments for centrifugal and positive displacement pumps

HM 283
Experiments with a centrifugal pump

HM 285
Experiments with a piston pump

HM 284
Series and parallel connected pumps

HM 286
Experiments with a gear pump

Learning concept of the GUNT-Labline range

Advantages of the learning concept

In order to enable optimal teaching in the demanding field of fluid energy machines, we have developed a learning concept that perfectly combines the various advantages of mechanical models, device-specific software and the instructional material.

Simple and clear mechanical models of the machines are connected to the PC via USB. Operation, measurement, display and analysis of measurement data are all carried out on the PC. To this end, the electronic data acquisition and control components are fully integrated into the models. The PC is therefore an integral part of the system. We call this the Hardware-Software Integration approach, or HSI for short.

The experimental units represent self-contained learning units, complementing the experimental units from a sub-field in terms of the learning objectives. During the experiments, importance is placed on the development of characteristic properties of the various types of machine. This allows the students to perform an evaluative comparison of the machine types and to assimilate criteria for later work in practice. The advantages and disadvantages of different types of machines can be demonstrated and discussed.

Mechanical model

Housing, pipes and tanks are transparent and provide a view of the key components and flow processes during operation (vortex, air bubbles, cavitation). Operating and flow noise and vibrations produce a realistic impression.

All this makes the function and processes in a machine understandable and guarantees a sustainable learning experience.

Water jet in the reaction turbine HM 288

Instructional material in paper form

A fundamental section with the relevant theory and model-based experiment instructions allow an intensive preparation for the experiment. Sample experiment results allow a qualified assessment of the students' own results.

Our didactic materials offer excellent support when preparing lessons, when conducting the experiments and when reviewing the experiment.

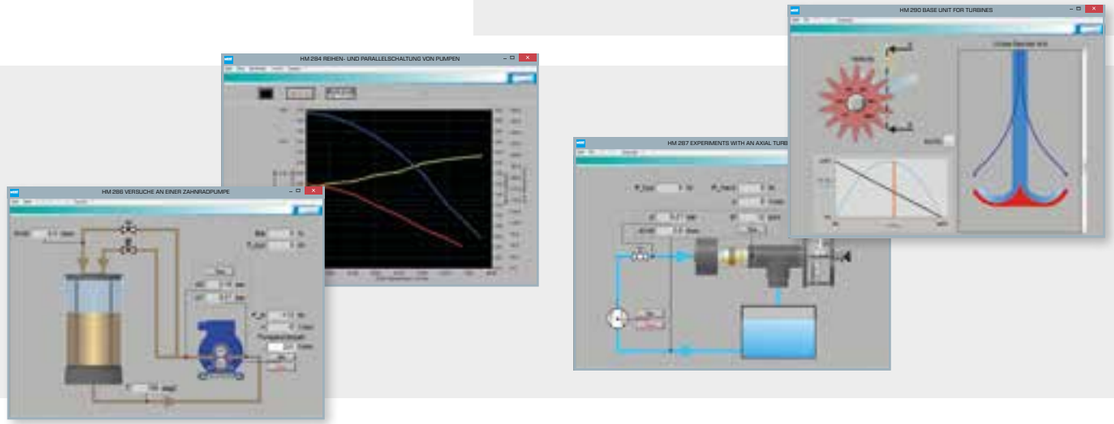

Device-specific GUNT software

The software forms a bridge between the mechanical model and the instructional material in paper form.

The software reflects the behaviour of the machine in specific measurements. The machine's behaviour can be studied and discussed in form of characteristic curves. Through simulation, the software provides the ability to visualise flow processes that cannot be seen and to show them in slow motion.

In particular the energy conversion between a mechanical component and a fluid in a fluid energy machine is easily understood.

Learning concept of the GUNT-Labline range

A wide range of experiments with a variety of options

Device-specific GUNT software, together with the microprocessor, provides software-based experiment execution and assessment

- record typical characteristic curves
- measurement of the mechanical, electrical and hydraulic power as well as power consumption
- determine the efficiency
- effect of speed on pressure and flow rate
- advantages and disadvantages of various fluid energy machines
- how the impeller shape affects the characteristic and efficiency
- occurrence of cavitation
- function of an air vessel

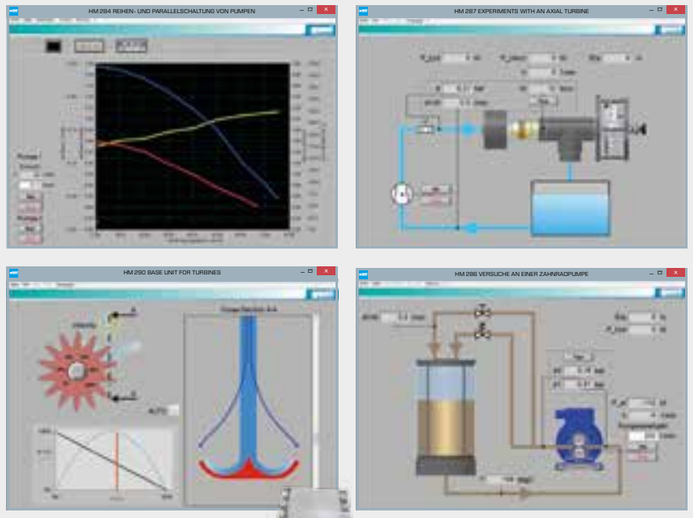

Overview of the topics

Fans, compressors

- typical dependence of pressure on speed
- typical dependence of flow rate on speed
- hydraulic power output and efficiency

HM 280
Experiments with a radial fan

- characteristic of a radial fan
- effect of the impeller shape

HM 282
Experiments with an axial fan

- characteristic of an axial fan
- stall

HM 292
Experiments with a radial compressor

- characteristic of a 2-stage radial compressor
- stage pressure ratio
- temperature increase

Pumps

- powers and efficiency

HM 283
Experiments with a centrifugal pump

- typical dependence of pressure and flow rate on the speed
- characteristic of a centrifugal pump
- effect of direction of rotation
- cavitation

HM 284
Series and parallel connected pumps

- individual and overall characteristics
- advantages and disadvantages of series and parallel connections
- efficiency considerations and areas of application

HM 285
Experiments with a piston pump

- typical characteristic of a displacement pump
- cyclical pump process over time
- p,V diagram and internal power
- pulsation and air vessel
- mechanical drive power

HM 286
Experiments with a gear pump

- typical dependence of pressure and flow rate on the speed
- pressure limitation
- characteristic of a displacement pump

Turbines

- torque/speed characteristic curve
- hydraulic input power, mechanical output power
- efficiency

HM 287
Experiments with an axial turbine

- power regulation

HM 288
Experiments with a reaction turbine

- partial load behaviour

HM 289
Experiments with a Pelton turbine

- partial load behaviour with needle adjustment compared to a throttle control

HM 291
Experiments with an action turbine

- partial load behaviour with regulation via number of nozzles compared to a throttle control

GUNT-FEMLine
Our series for studying fluid machinery

In the GUNT product range, FEM stands for the German term "**F**luid **E**nergie **M**aschinen", which means fluid machinery. The term "line" refers to a GUNT equipment series. The GUNT-FEMLine equipment series was designed specifically to represent the great diversity of fluid energy machines. The series offers a variety of options to learn about and gain an in-depth understanding of this complex subject matter.

To ensure a high level of practical orientation of the devices, the GUNT-FEMLine was developed with industrial components. This allows students to practice on examples from industrial applications that they will also encounter in their future workplaces.

Examples from industry

Pump system

Oil pumps, for example, are used in internal combustion engines for engine lubrication

Internal combustion engines in everyday life

Devices from the GUNT-FEMLine

Centrifugal pumps

Positive displacement pumps

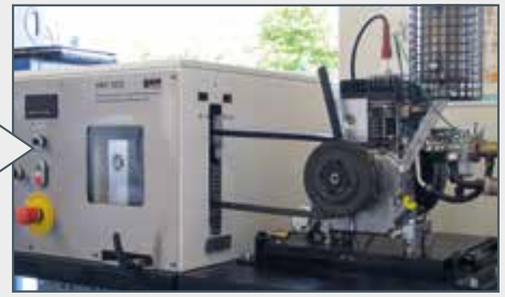
Internal combustion engines

Examples from industry

The rotor of a Francis turbine prior to installation

The Three Gorges Dam in China on the Yangtze River uses Voith Siemens Hydro Power Generation turbines.

Industrial refrigerating plant

Industrial compressed air generation plant

Blohm + Voss steam turbine

Devices from the GUNT-FEMLine

Francis turbine

Refrigeration system with open compressor

Single-stage piston compressor

Steam power plant with 2-cylinder steam engine and electrical steam generator

GUNT-FEMLine
Our series for studying fluid machinery

What are the benefits of a GUNT training course?

GUNT training courses are an important component of the education of engineers, because they convey essential practical knowledge.

What are the requirements for future engineers in both industry and research?

How do GUNT training courses prepare students for their future working lives?

Theory
includes sectional views and design drawings to familiarise students with the details of the machines

Practice
with practical experiments, measurements and test results

Evaluation
of test results, for example with GUNT software

Practical application
in the professional world

e.g. on engine test stands in the automotive industry

Advantages of the GUNT-FEMLine

Modularity

- exchangeable modules with a different thematic focus
- multiple combinations possible
- ONE base module can be used for all training courses

Flexibility

- flexibility due to the modular system
- adaptable to any curriculum thanks to the flexible layout options
- flexible upgrade: add additional accessories or training courses to the series one by one

Mobility

- all FEMLine trainers are built on wheels and can be moved around without effort
- accessories are easily connected to the base module with quick-release fasteners
- quick and easy exchange of accessories
- most trainers are equipped with a closed water and/or oil circuit and can be used regardless of conditions at the lab

Size

- the series covers a wide range of industrial driving and driven machines
- every fluid energy machine in this series offers a broad spectrum of experiments
- despite the size and capacity of the fluid machinery in this series, the trainers are easy to handle, set up, and store

Deepening of knowledge

- in-depth knowledge and comprehensive understanding of the complex subject area of fluid machinery
- clearly structured courses with a logical educational concept
- comprehensive range of experiments on every fluid energy machine

Practical relevance

- consistent use of industrial components
- the laboratory experiments are realistic and based on practical experimentation

Software support

- every experimental unit is equipped with a device-specific software from GUNT
- convenient evaluation of experiments with the software

The modular system of the GUNT-FEMLine

The GUNT-FEMLine equipment series offers fluid energy machines from all common machine classifications: driving and driven machines, turbomachines and positive displacement machines, and thermal and hydraulic machines. This variety is possible thanks to the modular design of the series: The GUNT-FEMLine consists of all kinds of different modules that can be combined flexibly.

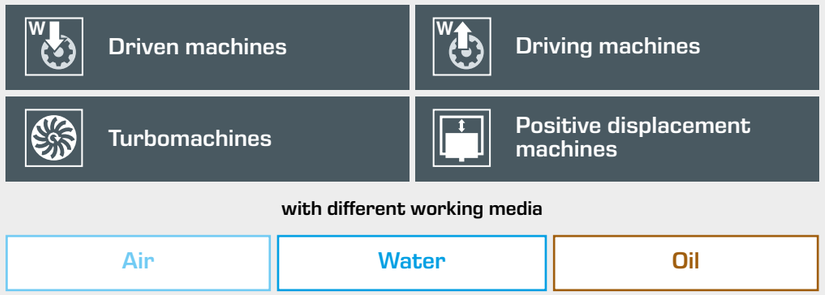

You have the choice! You are welcome to put together **your own training course – perfectly suited to your curriculum!** Take advantage of the modular design of this equipment series! If you need help realising your ideas and putting together your training courses, our development team will be happy to support you. Below, we have compiled a few suggestions on how the modules could be combined.

Driven machines

centrifugal pumps	**HM 365.11 to .14**
positive displacement pumps	**HM 365.16 to .18** **HM 365.21 to .24**
axial-flow pump	**HM 365.45**
compressor (refrigeration system)	**ET 165**
compressor (air)	**ET 513**

Driving machines

internal combustion engines	**CT 150 to CT 153**
Pelton and Francis turbine	**HM 365.31**
steam engine	**ET 813**

Turbomachines

centrifugal pumps	**HM 365.11 to .14**
axial-flow pump	**HM 365.45**
Pelton and Francis turbine	**HM 365.31**

Positive displacement machines

positive displacement pumps	**HM 365.16 to .18** **HM 365.21 to .24**
internal combustion engines	**CT 150 to CT 153**
compressor (refrigeration system)	**ET 165**
compressor (air)	**ET 513**
steam engine	**ET 813**

Cyclic processes

refrigeration system	**ET 165**
steam power plant	**ET 813**

Thermal fluid energy machines

Working medium: compressible fluids

internal combustion engines	**CT 150 to CT 153**
refrigeration system	**ET 165**
single-stage piston compressor	**ET 513**
steam power plant	**ET 813**

Hydraulic fluid energy machines

Working medium: incompressible fluids

water pumps	**HM 365.11 to .19**
oil pumps	**HM 365.21 to .24**
axial-flow pump	**HM 365.45**
Pelton and Francis turbine	**HM 365.31**

GUNT places this at your disposal:

Based on the function and mode of operation of fluid machinery, GUNT has compiled the following training courses.

Each course covers a broad range of experiments on selected topics. The fluid energy machines that form part of a training course are selected in such a way that the learning objectives build upon each other. Within a training course, students can compare different types of fluid energy machines with the same mode of action or operation. The consistent use of industrial components underscores the high level of practical relevance and increases the recognition factor for students as they start they careers later on.

The following pages contain a detailed description of the training courses.

Water pumps

HM 365.10 plus HM 365.11 to HM 365.19, HM 365.45

- comparison of different rotodynamic pumps and positive displacement pumps
- application, interaction and switching of different pumps

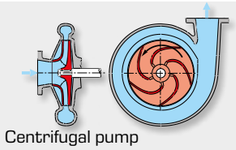

Centrifugal pump

Oil pumps

HM 365.20 plus HM 365.21 to HM 365.24

- introduction to and comparison of different types of oil pumps
- delivery mechanisms for viscous fluids

Screw pump

Turbines

HM 365.32 plus HM 365.31

- introduction to different types of turbines
- comparison of a Pelton and Francis Turbine

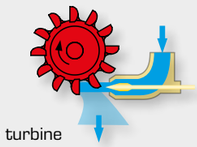

Pelton turbine

Internal combustion engines

CT 159 plus CT 151 to CT 153
Introduction to and comparison of different single cylinder engines:

- petrol and diesel engines
- 4-stroke and 2-stroke engines

Example of a 4-stroke engine, exhaust phase

Systems engineering

ET 165, ET 513, ET 813
Introduction to different systems:

- refrigerating plant
- compressed air generation plant
- steam power plant

Refrigerating plant

An overview of the GUNT-FEMLine

Water pump training

Complete trainer

The axial-flow pump HM 365.45 does not require an additional supply unit

Fluid energy machine

HM 365.11
Centrifugal pump, standard design

HM 365.12
Centrifugal pump, self-priming

HM 365.13
Centrifugal pump, multistage

HM 365.14
Centrifugal pumps, series and parallel connected

HM 365.45
Axial-flow pump

HM 365.15
Side channel pump

HM 365.16
Lobe pump

HM 365.17
Reciprocating piston pump

HM 365.18
Gear pump

HM 365.19
Vane pump

Oil pump training

Complete trainer

Fluid energy machine

HM 365.21
Screw pump

HM 365.22
External gear pump

HM 365.23
Vane pump

HM 365.24
Internal gear pump

Turbine training

Fluid energy machine

HM 365.31 Pelton and Francis turbine

Complete trainer

Engine training

Fluid energy machine

CT 150 Four-stroke petrol engine

CT 151
Four-stroke diesel engine

CT 152 Four-stroke petrol engine with variable compression

CT 153
Two-stroke petrol engine

Complete trainer

Plants and systems training

Fluid energy machine

ET 813.01
Electrical steam generator

ET 813
Two-cylinder steam engine

ET 513
Single-stage piston compressor

ET 165 Refrigeration system with open compressor

Complete trainer

GUNT-FEMLine
Water pump training part 1 rotodynamic pumps

Water pumps are driven machines. They can be designed as positive displacement pumps or rotodynamic pumps. The selection of the correct pump type is crucial when designing industrial systems or installing a pump. This is why it is important that future engineers understand the characteristics of pumps and interpret diagrams to be able to distinguish between the different types of pumps.

1st part | Rotodynamic pumps as water pumps:

The centrifugal pump is the most common water pump. It belongs to the group of rotodynamic pumps. The water pump training from GUNT offers four different types of centrifugal pumps, based on which students can learn about the mode operation and the differences of these types:

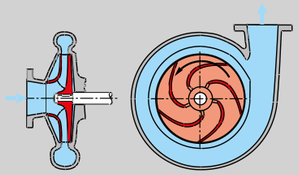

Standard design centrifugal pump

Standard pumps are pumps that are designed in accordance with international standards. The standard defines rating schemes and key dimensions so that standard pumps from different manufacturers can be exchanged without replacing the piping and ground plate.

HM 365.11
Centrifugal pump, standard design

Centrifugal self-priming pump

Self-priming pumps are able to suck in and transport air and water. In contrast to a simple centrifugal pump, they can also be started if there is air in the intake line. This is possible because of an additional side-channel suction stage that removes the air from the intake line and creates the negative pressure that is needed to suck in the fluid.

HM 365.12
Centrifugal pump, self-priming

4-stage centrifugal pump

In centrifugal pumps with multiple stages, several impellers are arranged in series. This allows the pump to overcome large differences in head.

HM 365.13
Centrifugal pump, multistage

Different circuit configurations for centrifugal pumps

In complex systems, pumps can be connected in series or in parallel. In series operation the head is the sum of the individual heads; in parallel operation the flow rates of the individual pumps are combined.

HM 365.14
Centrifugal pumps,
series and parallel connected

Side channel pump

Side channel pumps form a category between positive displacement pumps and rotodynamic pumps. During the suction phase the side channel pump operates according to the positive displacement principle. As soon as the suction process is over, the side channel pump starts working like a centrifugal pump. The centrifugal force of the rotating impeller separates the fluid and gas. Side channel pumps are therefore self-priming pumps.

HM 365.15
Side channel pump

Axial-flow pump

Axial-flow pumps are also known as propeller pumps. Axial-flow pumps come with fixed blades and with variable blades. The flow passes through the impeller in axial direction. In axial-flow pumps, the pressure is not built up by the effect of centrifugal force but, like the aerodynamic principle, by the propeller blade. Propeller pumps are not self-priming pumps. They are used when high flow rates and a small head are needed. The typical areas of application for propeller pumps are drainage systems, wastewater treatment plants and cooling water supply systems.

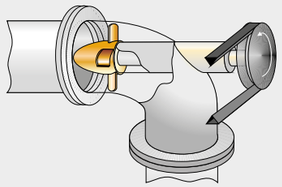

HM 365.45
Axial-flow pump

Sectional models and assembly training

HM 700.17 Cutaway model: centrifugal pump

To complete the water pump training, GUNT offers **sectional models and assembly and maintenance training** for different pumps. Please refer to catalogue 4 for more information on these devices.

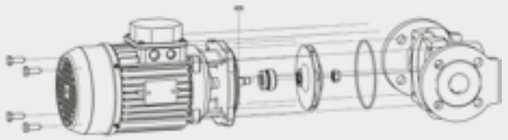

MT 185 Assembly & maintenance exercise: in-line centrifugal pump exploded drawing of an inline centrifugal pump

MT 181 Assembly & maintenance exercise: multistage centrifugal pump

GUNT-FEMLine
Water pump training part 2 positive displacement pumps

The HM 365.10 Supply unit for water pumps from GUNT is a trainer for studying the properties of different water pumps under realistic operating conditions. Some of the pumps are powerful industrial pumps. Combined with the drive unit HM 365 and the different pump units, the supply unit HM 365.10 is an ideal pump trainer.

HM 365.10
Supply unit for water pumps

2nd part | Positive displacement pumps as water pumps:

Lobe pump

In a lobe pump two non-contact pistons rotate in two cylindrical chambers. With each revolution, they deliver the same volume. Lobe pumps are used for delivering highly viscous and highly abrasive media.

HM 365.16 Lobe pump

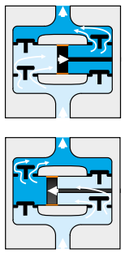

Reciprocating piston pump

The most simple type of reciprocating piston pump consists of a piston moving in a cylinder with one inlet and one outlet valve. Depending on the internal cylinder pressure, the valves open the inlet and outlet to the stroke chamber.

HM 365.17 Reciprocating piston pump

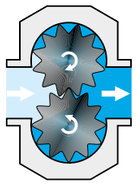

Gear pump

Essentially, gear pumps consist of three components: a housing with an inlet and outlet for the fluid and two gears, one of which powers the other one. Gear pumps differ depending on their internal design. The most common gear pump, the external gear pump, is used here as an example.

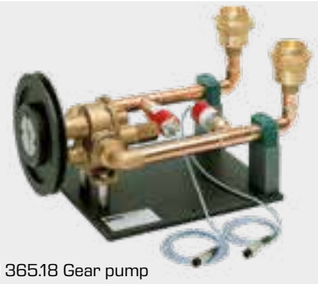

HM 365.18 Gear pump

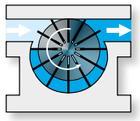

Vane pump

Vane pumps are also known as rotary vane pumps. They can be used for both liquid and gaseous media. There are vane pumps with constant displacement volumes and with adjustable displacement volumes. The pump consists of a housing, in which an eccentric cylindrical rotor rotates. Rotary vanes are spring-mounted to radial guides inside the rotor. During operation, the spring-force ensures that the rotary vanes run along the inner wall of the housing and an enclosed space is formed between them. The pumping medium is transported between the rotary vanes and the housing wall.

HM 365.19 Vane pump

Sectional models and assembly training

HM 700.20 Cutaway model: piston pump

To complete the water pump training, GUNT offers **sectional models and assembly and maintenance training** for different positive displacement pumps: Please refer to catalogue 4 for more information on these devices.

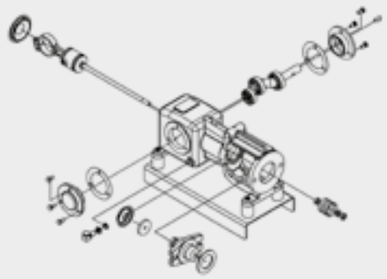

Exploded drawing of the piston pump

MT 184 Assembly & maintenance exercise: piston pump

GUNT-FEMLine
Oil pump training

Oil pumps are driven machines. The selection of the correct oil pump mainly depends on the viscosity or, its inverse, the fluidity of the oil. In refineries centrifugal pumps are used to deliver large volumes of thin or low viscosity oils, such as petroleum. Oils with a higher viscosity are transported with positive displacement pumps. Moreover, oil pumps are used to perform mechanical work and for lubrication and cooling purposes. In hydraulic systems, oil is used to transmit forces. The pumps that are needed for this purpose must be able to achieve high pressures in order to generate large lifting or forming forces. They are, for example, used in lifting platforms or metal presses.

This training course deals with oil pumps that transport oil with the help of enclosed volumes according to the positive displacement principle. Depending on requirements and demand, different oil pump designs are used. The most commonly used oil pumps are **gear pumps**. Essentially, gear pumps consist of the following components: a housing with an inlet and outlet for the oil and two gears, one of which powers the other one. Depending on their internal design, gear pumps are categorised as follows:

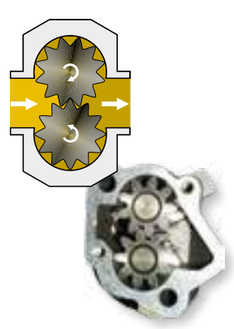

External gear pump

In an external gear pump, two gears rotate in opposite directions in a housing. The pumping medium is transported between the gears and the housing. Due to their simple, robust setup these pumps are relatively cost-efficient. External gear pumps are very common in the automobile industry.

HM 365.22
External gear pump

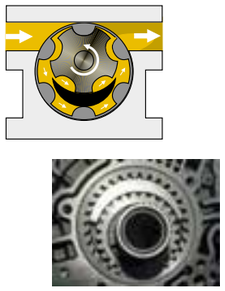

Internal gear pump

Internal gear pumps are also known as crescent pumps. They are characterised by their low pulsation, high efficiency, low level of noise and medium-high operating pressures. An internal gear drives an external toothed ring. Since the driving gear is mounted on an eccentric bearing, clearances result in the gaps between the gear and the toothed ring. These clearances form the delivery volume. A crescent-shaped seal between the gear and the ring forms the enclosed volume that is necessary to reach the required pressure.

HM 365.24
Internal gear pump

Toothed ring pump

Toothed ring pumps are also known as Eaton pumps or gerotor pumps. The internal gear runs eccentrically along the internal gearing of the toothed ring and powers this ring. The volume of the displacement chamber between the gaps changes, and thereby allows the pumping medium to be transported.

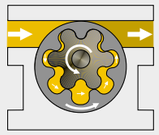

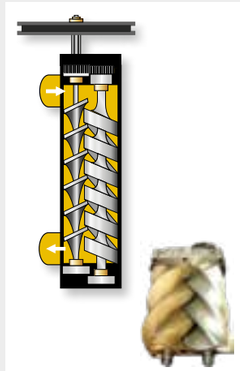

Screw pump

Screw pumps are able to provide continuous delivery of even viscous media without pulsation or turbulence. Their pump housing contains two or more rotors that rotate in opposite directions, with an external screw thread profile. As the threads of the screws engage, the fluid is transported. Depending on the thread pitch, very high pressures can be achieved. Screw pumps run very smoothly, which is why they are often used in lifts and as fuel pumps in oil burners.

HM 365.21
Screw pump

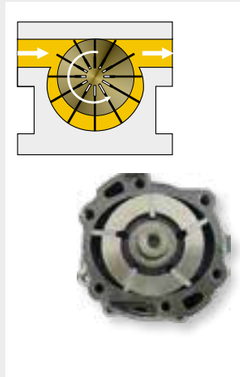

Vane pump

Vane pumps are also known as rotary vane pumps. They can be used for both liquid and gaseous media. In some vane pumps, the displacement volume is adjustable. These pumps consist of a housing, in which an eccentrically installed cylinder rotates (rotor). Rotary vanes are spring-mounted to radial guides inside the rotor. During operation, the spring-force ensures that the rotary vanes run along the inner wall of the housing and an enclosed space is formed between them. The pumping medium is transported between the rotary vanes and the housing wall.

HM 365.23
Vane pump

Sectional models and assembly training

HM 700.22 Cutaway model: gear pump

To complete the oil pump training, GUNT offers **sectional models and assembly and maintenance training** for different positive displacement pumps: Please refer to catalogue 4 for more information on these devices.

MT 186 Assembly & maintenance exercise: gear pump

GUNT-FEMLine
Turbine training

Turbines are driving machines. They convert the internal energy of a fluid into mechanical energy. Depending on where the energy conversion takes place, we distinguish between action turbines and reaction turbines.

Turbines are used in power plants to generate electrical power through connected generators, and in power units to generate thrust.

The complete trainer consists of three components:

1 HM 365 Universal drive and brake unit

2 HM 365.31 Pelton and Francis turbine

3 HM 365.32 Turbine supply unit

HM 365 is in generator mode and slows down the turbine with a V-belt. The generator converts the resulting power into electrical power.

On the work surface of the Turbine Supply Unit HM 365.32, one of the turbines HM 365.31 is placed and connected via hoses. The closed water circuit means that the trainer is mobile and can be used independently from the water system. The flow rate and/or the pressure can be adjusted by means of a flow control valve.

The GUNT-FEMLine turbine training introduces participants to an action turbine and a reaction turbine. The action turbine is a Pelton turbine, and the reaction turbine is a Francis turbine. The course explores and compares the different principles of operation of these turbines.

Assembly of a Pelton turbine at the Walchensee power plant in Germany (Voith Siemens Hydro Power)

Francis turbine, deinstalled

For more information on this training course please refer to the data sheets for the corresponding devices in chapter 2.

Turbine training: comparison of the principles of operation

Action turbine (Pelton turbine)

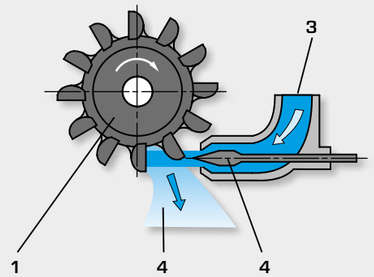

1 rotor,
2 distributor,
3 water inlet,
4 water outlet

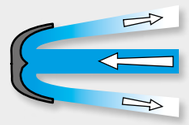

The water jet changes direction in the blade without changing velocity

In a Pelton turbine, the conversion of the pressure energy of water into kinetic energy takes place completely at the distributor. Since the entire pressure difference is reduced exclusively in the nozzle, the pressure in the rotor remains constant. The turbine power is controlled by adjusting the nozzle cross-section.

HM 365.31 Pelton and Francis turbine

Reaction turbine (Francis turbine)

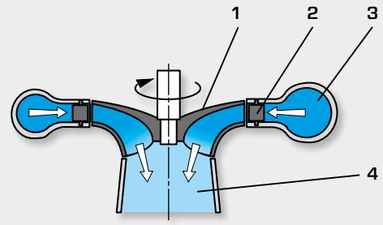

The flow cross sections change.
Acceleration of the water jet in the guide vane and the blade

In a Francis turbine, the conversion of the pressure energy into kinetic energy takes place inside the distributor and the rotor. The pressure at the rotor inlet is higher than the pressure at the rotor outlet. The turbine power is controlled by adjusting the guide vanes.

GUNT-FEMLine
Internal combustion engine training

Internal combustion engines are thermal driving machines. Internal combustion engines are used to power railway and motor vehicles, aircraft or watercraft and stationary machinery.

The GUNT-FEMLine offers four different internal combustion engines in a capacity range up to 2,2 kW: 4-stroke diesel and petrol engines with variable compression, and a 2-stroke petrol engine. The engines are supplied with fuel and air via a modular test stand, CT 159. The exhaust fumes are discharged to the outside via hoses. The engines are connected to the HM 365 Universal Drive and Brake Unit with a V-belt. HM 365 is first used to start the engines. While the engines are running, HM 365 is operated in generator mode, thus braking the engines.

The engines can be examined under full load or under partial load conditions. The characteristic diagram is determined with variable load and speed. The interaction of the brake and engine can also be examined in this context.

The **electronic indicating system** is a good way to gain an in-depth understanding of how an engine works. Special pressure sensors record the pressure in the cylinder chamber. These data provide important information on the combustion process in the engine. In industrial applications, indicating systems are used to optimise the combustion process. The data are used to create the indicator diagram.

The indicating system helps identify the individual strokes of the engine. The process of ignition or an ignition attempt, and the gas exchange can be examined. Cranking without ignition can be simulated while examining the processes inside the cylinder chamber. The idling behaviour of diesel and petrol engines can be compared. The indicating system can be used to carry out a thermodynamic analysis of the engine.

Modern GUNT software for Windows with comprehensive visualisation functions:

- process schematic for all engines with real-time display of all measured and calculated variables
- display of up to four characteristics at the same time
- representation of characteristics: select any assignment for the axes of the diagram
- storage of measuring data
- selection between four preset languages
- easy connection to a PC via USB

HM 365 + CT 159 + test engine (CT 150 – CT 153)
including PC data recording

- characteristics for full and partial load
- determination of friction loss in the engine
- comparison of diesel and petrol engines
- comparison of 2-stroke and 4-stroke engines
- 4-stroke petrol engine with variable compression

Extended range of experiments with

- exhaust gas analysis with CT 159.02

and / or

- electronic indication with PC-based data acquisition with CT 159.01 + engine-specific pressure sensor with TDC sensor (CT 159.03, CT 159.04 or CT 159.05)
- p-V diagram
- p-t diagram
- pressure curve during gas exchange
- determination of the indicated performance
- determination of mechanical efficiency

CT 150 Four-stroke petrol engine

Air-cooled, single-cylinder, 4-stroke petrol engine with external carburation

CT 159.03
Pressure sensor and TDC sensor

CT 151 Four-stroke diesel engine

Air-cooled, single-cylinder, 4-stroke diesel engine with direct injection

CT 159.04
Pressure sensor and TDC sensor

CT 152 Four-stroke petrol engine with variable compression

Air-cooled, single-cylinder, 4-stroke petrol engine:

- variable compression ratios that can be set by changing the combustion chamber geometry
- adjustable ignition point and variable carburettor jet

CT 159.03
Pressure sensor and TDC sensor

CT 153 Two-stroke petrol engine

Air-cooled, single-cylinder, 2-stroke petrol engine with diaphragm carburettor

CT 159.05
Pressure sensor and TDC sensor

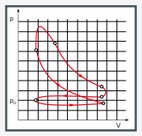

CT 159.01 Electronic engine indicating system

Pressure measurement in the cylinder chamber of an internal combustion engine

CT 159.02 Exhaust gas analysing unit

Measurement of the composition of exhaust gases (CO, CO_2, HC, O_2), the fuel / air ratio λ and the oil temperature of the engine.

GUNT-FEMLine
Systems engineering training

A system or plant consists of several coordinated technical components, e.g. machines, instruments, valves and fittings, and connection elements. The combination of the components must fulfil a clearly defined task. The components are related based on functional, control engineering, or safety engineering aspects.
During the development of a system design these components must be coordinated. Possible interdependencies between the components must be taken into account in order to achieve a functional overall system.

The systems engineering training presents three systems with completely different tasks: a **compression refrigeration system**, a **compressed air generation system**, and a **steam power plant**. All of these systems require the base module HM 365.

The experimental plants simulate real laboratory-sized plants. This allows a broad spectrum of experiments with reproducible results and a teaching style that is as close to reality as possible.

Every device of the GUNT-FEMLine comes with GUNT software that is specially designed for the requirements of the trainer. A USB interface transfers the measurement data to the PC. Using the software the measurement data can be clearly displayed on the PC. Time dependencies can be recorded and stored.

For more information on this training course please refer to the data sheets for the corresponding devices in chapters 3 and 4.

Compression refrigeration system: ET 165 Refrigeration system with open compressor

- principle of function of a compression refrigeration system
- open compressor with variable speed
- measuring the mechanical drive power
- determination of the compressor efficiency
- effect of the compressor flow rate on the refrigeration circuit

HM 365 Universal drive and brake unit

ET 165 Refrigeration system with open compressor

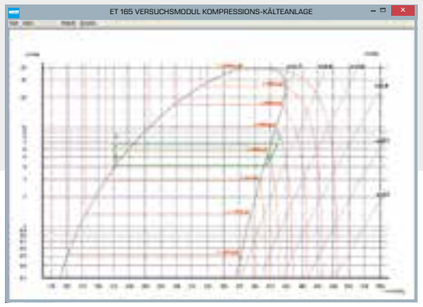

Output via the software:
representation of the cyclic thermodynamic process in the log p-h diagram

Industrial compressed air generation plant: ET 513 Single-stage piston compressor

- operating principle of a piston compressor
- measurement of volumetric flow rate and pressures
- power measurement
- determination of efficiency
- plotting of compressor characteristic
- determination of intake flow and volumetric efficiency

HM 365 Universal drive and brake unit

ET 513 Single-stage piston compressor

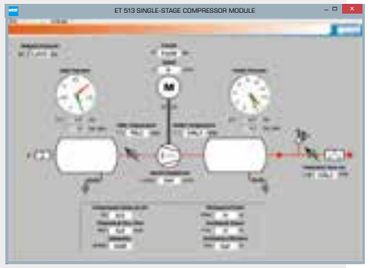

The software displays:
- pressures
- air flow rate
- compressor speed
- temperatures
- volumetric efficiency and isothermal efficiency

Steam power plant: ET 813 Steam engine and ET 813.01 Steam generator

- operating principle of a piston steam engine
- cyclic process of a steam power plant
- power measurement
- energy balances
- determination of efficiency
- electrical steam generator: quick start-up, fully automatic, reliable, no exhaust gases, no fuel necessary
- no special authorisation needed (in EC countries)

HM 365 Universal drive and brake unit

ET 813 Two-cylinder steam engine

ET 813.01 Electrical steam generator

The following data are represented:
- temperatures
- pressure and pressure differences
- steam engine speed
- mechanical and electrical power

The complete GUNT programme – equipment for engineering education

1 Engineering mechanics and engineering design

- statics
- strength of materials
- dynamics
- machine dynamics
- engineering design
- materials testing

2 Mechatronics

- engineering drawing
- cutaway models
- dimensional metrology
- fasteners and machine parts
- manufacturing engineering
- assembly projects
- maintenance
- machinery diagnosis
- automation and process control engineering

3 Thermal engineering

- fundamentals of thermodynamics
- thermodynamic applications in HVAC
- renewable energies
- thermal fluid energy machines
- refrigeration and air conditioning technology

4 Fluid mechanics

- steady flow
- transient flow
- flow around bodies
- fluid machinery
- components in piping systems and plant design
- hydraulic engineering

5 Process engineering

- mechanical process engineering
- thermal process engineering
- chemical process engineering
- biological process engineering
- water treatment

6 2E Energy & environment

Energy

- solar energy
- hydropower and ocean energy
- wind power
- biomass
- geothermal energy
- energy systems
- energy efficiency in building service engineering

Environment

- water
- air
- soil
- waste

Planning and consulting · Technical service
Commissioning and training

Index

Keyword	Code (page)
0...9	
3-hole probe	HM 215 (246) HM 405 (164/218)
A	
Action force, flowing fluid	HM 260 (22)
Action turbine	ET 796 (290) HM 150.19 (132) HM 270 (104) HM 289 (142) HM 291 (140) HM 365.31 (146) HM 450.01 (154)
Aerofoil	HM 226 (38)
Air flow rate	ET 513 (256)
Air flow, subsonic	HM 230 (26)
Air flow, transonic	HM 230 (26)
Areometer	HM 115 (14)
Axial flow fan	HM 215 (246) HM 282 (242)
Axial turbine	ET 796 (290) ET 830 (272) ET 851 (278) HM 287 (136)
Axial-flow pump	HM 365.45 (216)
Axial-flow turbomachine	ET 796 (290) ET 830 (272) ET 851 (278) HM 215 (246) HM 287 (136) HM 365.45 (216) HM 405 (164/218)
B	
Balancing	TM 180 (88)
Blade shape	HM 280 (250) HM 405 (164/218)
Boiler efficiency	ET 810 (270) ET 830 (272) ET 850 (276)
Boiling	WL 210 (74) WL 220 (76)
Boiling point, water	WL 204 (52)
Boyle-Mariotte's law	HM 115 (14) WL 102 (48)
Broad-crested weir	HM 241 (42)
Buoyancy force	HM 115 (14)
Buoyancy, bodies at rest	HM 115 (14)

Keyword	Code (page)
C	
Capillarity	HM 115 (14)
Carbon dioxide, measurement	CT 159.02 (173)
Carbon monoxide, measurement	CT 159.02 (173)
Cavitation	HM 283 (190) HM 380 (30) HM 405 (164/218) ST 250 (32)
Centre of pressure	HM 115 (14)
Centrifual governor	TM 632 (84)
Centrifugal pump	HM 150.04 (184) HM 283 (190) HM 284 (192) HM 290 (144) HM 299 (260) HM 300 (194) HM 332 (198) HM 362 (202) HM 365.13 (212) HM 380 (30) HM 405 (164/218) HM 450C (152/188)
Centrifugal pump, self-Priming	HM 362 (202) HM 365.11 (210) HM 365.12 (211) HM 365.15 (214)
Change of state, gases	WL 102 (48)
Change of state, isochoric	WL 102 (48)
Change of state, isothermal	WL 102 (48)
Characteristic, compressor	HM 292 (252) HM 299 (260)
Characteristic, fan	HM 210 (248) HM 215 (246) HM 280 (250) HM 282 (242)
Characteristic, turbine	HM 287 (136) HM 288 (138) HM 289 (142) HM 291 (140) HM 405 (164/218) HM 450.01 (154) HM 450.02 (156)
Choking effect	HM 260 (22) HM 261 (24)
Combustion chamber	ET 794 (288)
Communicating vessels	HM 115 (14)
Comparision of 2-stroke/4-stroke engines	CT 159 (170)
Comparision of action/reaction turbines	HM 365.31 (146)
Comparision of petrol/diesel engines	CT 159 (170)
Compressed air driven impulse turbine	HM 270 (104)
Compressed air driven reaction turbine	HM 272 (106)
Compressible fluids	HM 230 (26)
Compression, two-stage	ET 430 (300)
Compressor	ET 165 (296) ET 430 (300) ET 513 (256) ET 352 (302) HM 292 (252) HM 299 (260)
Compressor characteristic	ET 513 (256) HM 292 (252) HM 299 (260)
Compressor efficiency	HM 292 (252)
Compressor, radial	HM 292 (252)
Compressor, rotary vane	HM 299 (260)
Compressor, single-stage	ET 513 (256)
Condensation Process	WL 230 (78)
Condenser	ET 810 (270) ET 813 (282) ET 830 (272) ET 851 (278) WL 230 (78)
Continuity equation	HM 230 (26)
Contraction coefficient	HM 150.09 (20)
Contraction in cross-section	HM 112 (16) HM 122 (18) HM 241 (42)
Control (speed)	RT 050 (82) TM 632 (84)
Convection	WL 440 (54)
Convective heat transfer	WL 210 (74) WL 230 (78) WL 320 (72)
Convergent/divergent nozzle	HM 230 (26) HM 260 (22) HM 261 (24)
Cooling column	WL 320 (72)
Cooling tower	WL 320 (72)
Counterflow heat exchanger	WL 110 (60)
Crank mechanism	TM 180 (88)
Crescent pump	HM 365.24 (239)
Critical point, water	WL 204 (52)
Critical pressure ratio	HM 230 (26) HM 260 (22) HM 261 (24)
Critical speed	TM 620 (86)

Keyword	Code (page)
D	
de Laval nozzle	HM 230 (26) HM 261 (24)
Density of liquids	HM 115 (14)
Determining pipe friction factor	HM 112 (16) HM 122 (18)
Dipole, demonstration	HM 152 (34)
Displacement pump, oil	HM 286 (224) HM 365.21 (236) HM 365.22 (237) HM 365.23 (238) HM 365.24 (239)
Displacement pump, water	HM 285 (222) HM 299 (260) HM 362 (202) HM 365.16 (228) HM 365.17 (229) HM 365.18 (230)
Distribution of stage pressure ratios, compressor	HM 292 (252)
Dropwise condensation	WL 230 (78)
Dynamic imbalance	TM 180 (88)
E	
Eddy current brake	HM 287 (136) HM 288 (138) HM 289 (142) HM 291 (140) HM 421 (160)
Efficiency, compressor	HM 292 (252)
Efficiency, fan	HM 210 (248) HM 280 (250) HM 282 (242)
Efficiency, nozzle	HM 260 (22)
Efficiency, wind power plant	ET 210 (116) ET 220 (118)
Engine test stand	CT 159 (170)
Enlargement in cross-section	HM 112 (16) HM 122 (18) HM 241 (42)
Evaporation Process	WL 210 (74) WL 220 (76)
Exhaust gas analysis	CT 159.02 (173) ET 850 (276)
Exhaust gas temperature	CT 159 (170)
Experimental flume	HM 241 (42)
External gear pump	HM 365.18 (230) HM 365.22 (237)
F	
Fan characteristic	HM 210 (248) HM 215 (246) HM 280 (250) HM 282 (242)
Fan efficiency	HM 210 (248) HM 280 (250) HM 282 (242)
Feedwater treatment	ET 830 (272)
Film boiling	WL 210 (74) WL 220 (76)
Film condensation	WL 230 (78)
Flow around bodies	HM 133 (36) HM 152 (34) HM 226 (38)
Flow in an open channel	HM 241 (42)
Flow measurement, fundamentals	HM 122 (18)
Flow separation	HM 133 (36) HM 152 (34) HM 226 (38)
Flow straightener	HM 133 (36) HM 215 (246) HM 226 (38) HM 280 (250) HM 282 (242)
Flow through models	HM 133 (36) HM 152 (34) HM 226 (38)
Flow, two-dimensional	HM 133 (36) HM 152 (34)
Fluids, compressible	HM 230 (26)
Fog generator	HM 226 (38)
Four-stroke engine	CT 150 (174) CT 151 (175) CT 152 (176)
Francis turbine	HM 150.20 (134) HM 365.31 (146) HM 430C (158) HM 450.02 (156)
Free-jet turbine	HM 150.19 (132) HM 289 (142) HM 365.31 (146) HM 450.01 (154)
Fuel-air ratio	CT 150 (174) CT 151 (175) CT 152 (176) CT 153 (177) CT 159 (170) CT 159.02 (173) ET 796 (290)

Keyword	Code (page)
G	
Gas turbine system	ET 792 (110) ET 794 (288)
Gay-Lussac's law	WL 102 (48)
Gear pump	HM 286 (224) HM 365.18 (230)
Generator	ET 810 (270) ET 830 (272) HM 365 (206)
Ground pressure measurement	HM 115 (14)
Guide vane, turbine	HM 365.31 (146) HM 421 (160) HM 430C (158) HM 450.02 (156)
H	
Hartnell governor	TM 632 (84)
Head	HM 421 (160)
Heat conduction in solids	WL 372 (56)
Heat exchangers, power	WL 110 (60)
Hele-Shaw cell	HM 152 (34)
Horizontal flow	HM 150.09 (20)
h-s diagramm	ET 850 (276)
Humidity measurement of air	WL 320 (72)
h-x diagram	WL 320 (72)
Hydrocarbons, measurement	CT 159.02 (173)
Hydrogen bubbles, electrolytically generated	HM 133 (36)
Hydrostatic pressure	HM 115 (14)
I	
Imbalance	TM 180 (88)
Impact force	HM 260 (22)
Impeller pump	HM 299 (260)
Impeller, fan	HM 215 (246) HM 280 (250)
Impeller, pump	HM 283 (190) HM 405 (164/218)
Impulse turbine	ET 796 (290) HM 150.19 (132) HM 270 (104) HM 289 (142) HM 291 (140) HM 365.31 (146) HM 450.01 (154)
Impulse turbine, axial	HM 270 (104)
Impulse turbine, compressed air driven	HM 270 (104)
Intake air	CT 159 (170)
Internal combustion engine	CT 159 (170) CT 150 (174) CT 151 (175) CT 152 (176) CT 153 (177)
Internal gear pump	HM 365.24 (239)
Isochoric/isothermal change of state of gases	WL 102 (48)
J	
Jacketed heat exchanger	WL 110.04 (68)
Jet engine	ET 792 (110) ET 796 (290)

Index

Keyword	Code (page)
K	
Kaplan turbine	HM 421 (160)
Karman vortices	HM 133 (36)
Kinetic wind energy	ET 210 (116) ET 220 (118) ET 220.01 (120)
L	
Laminar flow	HM 133 (36) HM 152 (34)
Laplace equation	HM 152 (34)
Lobe pump	HM 365.16 (228)
M	
Marine energy	ET 270 (128)
Measurement method, pressure	HM 115 (14)
Measuring nozzle	HM 230 (26)
Mode of natural vibration	TM 620 (86)
N	
Needle nozzle, Pelton turbine	HM 150.19 (132) HM 289 (142) HM 450.01 (154)
Non-return valve	HM 112 (16)
Nozzle efficiency	HM 260 (22)
Nozzle flow	HM 260 (22)
Nozzle, convergent/divergent	HM 230 (26) HM 260 (22) HM 261 (24)
NPSH value	HM 365.11 (210) HM 365.12 (211) HM 365.13 (212)
Nucleate boiling	WL 220 (76)
O	
Oil pump	HM 365.21 (236) HM 365.22 (237) HM 365.23 (238) HM 365.24 (239)
Once-through steam boiler	ET 830 (272) ET 850 (276)
Open compressor	ET 165 (298) ET 351C (50)
Opening characteristic of shut-off valves and fittings	HM 112 (16) HM 122 (18)
Operating point	HM 210 (248) HM 299 (260) HM 300 (194) HM 365.10 (208) HM 365.20 (234)
Oscillating water column (OWC)	ET 270 (128)
Overall heat transfer coefficient	WL 110 (60)
OWC (Oscillating Water Column)	ET 270 (128)

Keyword	Code (page)
P	
Parallel flow	HM 152 (34)
Parallel flow heat exchanger	WL 110 (60)
Pascal's law	HM 115 (14)
Pelton turbine	HM 150.19 (132) HM 289 (142) HM 365.31 (146) HM 450.01 (154)
Petrol engine	CT 150 (174) CT 152 (176) CT 153 (177)
Petrol engine	CT 150 (174) CT 152 (176) CT 153 (177)
Piston compressor	HM 299 (260)
Piston pump	HM 285 (222) HM 299 (260) HM 362 (202) HM 365.16 (228) HM 365.17 (229)
Piston steam engine	ET 810 (270)
Plate heat exchanger	WL 110.02 (64)
Porter governor	TM 632 (84)
Potential flow	HM 152 (34)
Power coefficient	ET 210 (116) ET 220 (118)
Power station	ET 810 (270) ET 830 (272)
Power turbine	ET 792 (110) ET 794 (288)
Pressure measurement, fundamentals	HM 122 (18)
Pressure ratio, critical	HM 230 (26) HM 260 (22) HM 261 (24)
Pressure, hydrostatic	HM 115 (14)
Pressure, measurement method	HM 115 (14)
Proell governor	TM 632 (84)
Propeller pump	HM 365.45 (216)
Propelling nozzle	ET 792 (110)
Pulsation damping	HM 285 (222)
Pump test stand	HM 305 (196)
Pump, axial	HM 365.45 (216)
Pump, centrifugal	HM 150.04 (184) HM 283 (190) HM 284 (192) HM 290 (144) HM 299 (260) HM 300 (194) HM 332 (198) HM 362 (202) HM 365.13 (212) HM 380 (30) HM 405 (164/218) HM 450C (152/188)
Pump, gear	HM 286 (224) HM 365.18 (230) HM 365.22 (237) HM 365.24 (239)
Pump, lobe	HM 365.16 (228)
Pump, oil	HM 365.21 (236) HM 365.22 (237) HM 365.23 (238) HM 365.24 (239)
Pump, piston	HM 285 (222) HM 299 (260) HM 362 (202) HM 365.16 (228) HM 365.17 (229)
Pump, positive displacement	HM 285 (222) HM 286 (224) HM 299 (260) HM 362 (202) HM 365.21 (236) HM 365.22 (237) HM 365.23 (238) HM 365.24 (239)
Pump, propeller	HM 365.45 (216)
Pump, reciprocating piston	HM 365.17 (229)
Pump, rotary vane	HM 365.19 (231) HM 365.23 (238)
Pump, rotary vane	HM 365.19 (231) HM 365.23 (238)
Pump, rotary-type positive displacement	HM 286 (224)
Pump, screw	HM 365.21 (236)
Pump, series and parallel connected	HM 150.16 (186) HM 284 (192) HM 299 (260) HM 332 (198) HM 362 (202) HM 365.14 (213)
Pump, side channel	HM 362 (202) HM 365.15 (214)
Pumps connected in parallel	HM 150.16 (186) HM 284 (192) HM 299 (260) HM 332 (198) HM 362 (202) HM 365.14 (213)
Pumps connected in series	HM 150.16 (186) HM 284 (192) HM 299 (260) HM 332 (198) HM 362 (202) HM 365.14 (213)
Pumps, comparison	HM 299 (260) HM 362 (202)
p-V diagram	HM 285 (222)

Keyword	Code (page)
R	
Radial compressor	HM 292 (252)
Rankine half-bodies	HM 152 (34)
Reaction force, flowing fluid	HM 260 (22)
Reaction principle	HM 272 (106) HM 288 (138)
Reaction turbine	HM 150.20 (134) HM 272 (106) HM 287 (136) HM 288 (138) HM 421 (160) HM 430C (158) HM 450.02 (156)
Reaction turbine, compressed air driven	HM 272 (106)
Reaction turbine, radial	HM 272 (106)
Reciprocating engine	TM 180 (88)
Reciprocating piston pump	HM 365.17 (229)
Refrigeration chamber	ET 165 (298)
Residual oxygen content	CT 159 (170) CT 159.02 (173)
Resistance coefficient, pipe elements	HM 112 (16) HM 122 (18)
Resonance	TM 180 (88) TM 620 (86)
Rotary vane	HM 299 (260) HM 365.19 (231) HM 365.23 (238)
Rotary vane compressor	HM 299 (260)
Rotary vane pump	HM 365.19 (231) HM 365.23 (238)
Rotary-type positive displacement pump	HM 286 (224)
Rotating shaft	TM 620 (86)
Rotor	HM 288 (138) HM 289 (142) HM 291 (140) TM 620 (86)
Rotor, elastic	TM 620 (86)
Rotor, turbine	HM 270 (104) HM 272 (106) HM 287 (136) HM 288 (138) HM 289 (142) HM 291 (140) HM 405 (164/218) HM 450.01 (154) HM 450.02 (156)

Keyword	Code (page)
S	
Saturated vapour	ET 810 (270) ET 813.01 (284) WL 204 (52)
Screw pump	HM 365.21 (236)
Self-centring effec (bending vibrations)	TM 620 (86)
Self-priming centrifugal pump	HM 362 (202) HM 365.11 (210) HM 365.12 (211) HM 365.15 (214)
Sharp-crested weir	HM 241 (42)
Shell and tube heat exchanger	WL 110.03 (66)
Shock wave	HM 230 (26) HM 261 (24)
Shut-off valves and fittings	HM 112 (16)
Side channel pump	HM 362 (202) HM 365.15 (214)
Single-stage compressor	ET 513 (256)
Slide vane	HM 365.19 (231) HM 365.23 (238)
Slug flow	WL 210 (74)
Sources and sinks	HM 152 (34)
Specific steam consumption	ET 813 (282) ET 830 (272) ET 851 (278)
Specific thrust	ET 792 (110) ET 796 (290)
Speed, critical	TM 620 (86)
Stall	HM 226 (38) HM 282 (242)
Standard pump	HM 305 (196) HM 365.11 (210)
Start-up procedure, gas turbine	ET 796 (290)
Static imbalance	TM 180 (88)
Stator	HM 287 (136)
Steam boiler	ET 810 (270) ET 813.01 (284) ET 830 (272) ET 850 (276)
Steam consumption, specific	ET 813 (282) ET 830 (272) ET 851 (278)
Steam engine	ET 810 (270) ET 813 (282)
Steam generator	ET 813.01 (284) ET 830 (272) ET 850 (276)
Steam power plant	ET 810 (270) ET 813 (282) ET 830 (272) ET 850 (276)
Steam turbine	ET 830 (272) ET 851 (278)
Stirred tank	WL 110.04 (68)
Streamlines, visualisation	HM 133 (36) HM 152 (34) HM 226 (38)
Sub-cooled boiling	WL 210 (74)
Subsonic air flow	HM 230 (26)
Superheated steam	ET 830 (272) ET 850 (276)
Superheater	ET 830 (272) ET 850 (276)
Supersonic flow	HM 230 (26)
Surface tensions	HM 115 (14)
System characteristics	HM 210 (248) HM 284 (192) HM 299 (260) HM 305 (196) HM 332 (198) HM 362 (202) HM 365.10 (208) HM 365.20 (234) HM 365.45 (216)

Index

Keyword	Code (page)
T	
Temperature profile	WL 110 (60) WL 440 (54) WL 372 (56)
Temperature-pressure diagram	WL 204 (52)
Thrust	HM 260 (22)
Thrust measurement	ET 792 (110) ET 796 (290)
Thrust, specific	ET 792 (110) ET 796 (290) HM 260 (22)
Tip-speed ratio	ET 210 (116) ET 220 (118)
Trajectory	HM 150.09 (20)
Transonic air flow	HM 230 (26)
Triple point, water	WL 204 (52)
Tubular heat exchanger	WL 110.01 (62)
Turbine curve	HM 287 (136) HM 288 (138) HM 289 (142) HM 291 (140) HM 405 (164/218) HM 450.01 (154) HM 450.02 (156)
Turbine efficiency, gas turbine	ET 792 (110) ET 794 (288) ET 796 (290)
Turbine efficiency, steam turbine	ET 830 (272) ET 851 (278)
Turbine efficiency, water turbine	HM 150.19 (132) HM 287 (136) HM 288 (138) HM 289 (142) HM 291 (140) HM 421 (160) HM 430C (158) HM 450.01 (154) HM 450.02 (156)
Turbine, action	HM 289 (142) HM 291 (140) HM 365.31 (146) HM 450.01 (154)
Turbine, axial	ET 796 (290) ET 830 (272) ET 851 (278) HM 287 (136)
Turbine, Francis	HM 150.20 (134) HM 365.31 (146) HM 430C (158) HM 450.02 (156)
Turbine, free jet	HM 150.19 (132) HM 289 (142) HM 365.31 (146) HM 450.01 (154)
Turbine, impulse	HM 270 (104)
Turbine, Kaplan	HM 421 (160)
Turbine, Pelton	HM 150.19 (132) HM 289 (142) HM 365.31 (146) HM 450.01 (154)
Turbine, reaction	HM 150.20 (134) HM 272 (106) HM 287 (136) HM 288 (138) HM 430C (158) HM 450.02 (156)
Turbine, Wells	ET 270 (128)
Turbomachine, axial flow	ET 796 (290) ET 830 (272) ET 851 (278) HM 215 (246) HM 287 (136) HM 365.45 (216) HM 405 (164/218)
Two-dimensional flow	HM 133 (36) HM 152 (34)
Two-stage compression	ET 430 (300)
Two-stroke-engine	CT 153 (177)

Keyword	Code (page)
V	
Valve, non-return	HM 112 (16)
Vane pump	HM 365.19 (231) HM 365.23 (238)
Vapour bubbles	HM 380 (30) ST 250 (32) WL 210 (74)
Vapour jet compressor	ET 352 (302)
Vapour pressure curve of water	ET 810 (270) ET 813 (282) WL 204 (52) WL 220 (76) WL 230 (78)
Velocity of sound in air	HM 230 (26)
Velocity triangles	HM 405 (164/218) HM 430C (158) HM 450.02 (156)
Venturi nozzle	HM 112 (16) HM 210 (248) HM 241 (42) HM 299 (260) ST 250 (32)
Visualisation of streamlines	HM 133 (36) HM 152 (34) HM 226 (38)
Volumetric efficiency	CT 159 (170) ET 165 (298) ET 513 (256)
Volumetric flow, determination	HM 230 (26)
Vortex formation	HM 133 (36) HM 226 (38)

Keyword	Code (page)
W	
Wave energy converter	ET 270 (128)
Wave flume	ET 270 (128)
Wave generator, configurable	ET 270 (128)
Weir, broad-crested	HM 241 (42)
Weir, sharp-crested	HM 241 (42)
Wells turbine	ET 270 (128)
Wet cooling tower	WL 320 (72)
Wet steam	WL 210 (74) ET 850 (276)
Wind energy	ET 210 (116) ET 220 (118) ET 220.01 (120)
Wind energy, kinetic	ET 210 (116) ET 220 (118) ET 220.01 (120)
Wind power plant	ET 210 (116) ET 220 (118) ET 220.01 (120)
Wind power plant, efficiency	ET 210 (116) ET 220 (118)
Wind tunnel	HM 226 (38)

Product overview

CT		
CT 150	Four-stroke petrol engine for CT 159	174
CT 151	Four-stroke diesel engine for CT 159	175
CT 152	Four-stroke petrol engine with variable compression for CT 159	176
CT 153	Two-stroke petrol engine for CT 159	177
CT 159	Modular test stand for single-cylinder engines, 2,2kW	170
CT 159.01	Electronic engine indicating system for CT 159	172
CT 159.02	Exhaust gas analysing unit	173

ET		
ET 165	Refrigeration system with open compressor	298
ET 210	Fundamentals of windturbines	116
ET 220	Energy conversion in a wind power plant	118
ET 220.01	Wind power plant	120
ET 220.10	Control unit for wind power plant ET 220.01	122
ET 222	Wind power drive train	124
ET 270	Wave energy converter, OWC	128
ET 351C	Thermodynamics of the refrigeration circuit	050
ET 352	Vapour jet compressor in refrigeration	302
ET 430	Refrigeration system with two-stage compression	300
ET 513	Single-stage piston compressor	256
ET 792	Gas turbine	110
ET 794	Gas turbine with power turbine	288
ET 796	Gas turbine jet engine	290
ET 810	Steam power plant with steam engine	270
ET 813	Two-cylinder steam engine	282
ET 813.01	Electrical steam generator	284
ET 830	Steam power plant, 1,5kW	272
ET 850	Steam generator	276
ET 851	Axial steam turbine	278

HM		
HM 112	Fluid mechanics trainer	016
HM 115	Hydrostatics trainer	014
HM 122	Pressure losses in pipes	018
HM 133	Visualisation of flow fields	036
HM 150.04	Centrifugal pump	184
HM 150.09	Horizontal flow from a tank	020
HM 150.16	Series and parallel configuration of pumps	186
HM 150.19	Operating principle of a Pelton turbine	132
HM 150.20	Operating principle of a Francis turbine	134
HM 152	Potential flow	034
HM 210	Characteristic variables of a radial fan	248
HM 215	Two-stage axial fan	246
HM 226	Wind tunnel for visualisation of streamlines	038
HM 230	Flow of compressible fluids	026
HM 241	Fundamentals of water flow	042
HM 260	Characteristics of nozzles	022
HM 261	Nozzle pressure distribution	024
HM 270	Impulse turbine	104
HM 272	Reaction turbine	106
HM 280	Experiments with a radial fan	250
HM 282	Experiments with an axial fan	242
HM 283	Experiments with a centrifugal pump	190
HM 284	Series and parallel configuration of pumps	192
HM 285	Experiments with a piston pump	222
HM 286	Experiments with a gear pump	224
HM 287	Experiments with an axial turbine	136
HM 288	Experiments with a reaction turbine	138
HM 289	Experiments with a Pelton turbine	142
HM 290	Base unit for turbines	144
HM 291	Experiments with an action turbine	140
HM 292	Experiments with a radial compressor	252
HM 299	Comparison of positive displacement machines and turbomachines	260
HM 300	Hydraulic circuit with centrifugal pump	194
HM 305	Centrifugal pump trainer	196
HM 332	Pump characteristics for parallel and series configuration	198
HM 362	Comparison of pumps	202
HM 365	Universal drive and brake unit	206
HM 365.10	Supply unit for water pumps	208
HM 365.11	Centrifugal pump, standard design	210
HM 365.12	Centrifugal pump, self-priming	211
HM 365.13	Centrifugal pump, multistage	212
HM 365.14	Centrifugal pumps, series and parallel connected	213
HM 365.15	Side channel pump	214
HM 365.16	Lobe pump	228
HM 365.17	Reciprocating piston pump	229
HM 365.18	Gear pump	230
HM 365.19	Vane pump	231
HM 365.20	Oil pump supply unit	234
HM 365.21	Screw pump	236
HM 365.22	External gear pump	237
HM 365.23	Vane pump	238
HM 365.24	Internal gear pump	239
HM 365.31	Pelton and Francis turbine	146
HM 365.32	Turbine supply unit	148
HM 365.45	Axial-flow pump	216
HM 380	Cavitation in pumps	030
HM 405	Axial-flow turbomachines	164
HM 405	Axial-flow turbomachines	218
HM 421	Kaplan turbine trainer	160
HM 430C	Francis turbine trainer	158
HM 450.01	Pelton turbine	154
HM 450.02	Francis turbine	156
HM 450C	Characteristic variables of hydraulic turbomachines	152
HM 450C	Characteristic variables of hydraulic turbomachines	188

RT		
RT 050	Training system: speed control, HSI	082

ST		
ST 250	Cavitation	032

TM		
TM 180	Forces in reciprocating engines	088
TM 620	Bending elasticity in rotors	086
TM 632	Centrifugal governor	084

WL		
WL 102	Change of state of gases	048
WL 110	Heat exchanger supply unit	060
WL 110.01	Tubular heat exchanger	062
WL 110.02	Plate heat exchanger	064
WL 110.03	Shell & tube heat exchanger	066
WL 110.04	Stirred tank with double jacket and coil	068
WL 204	Vapour pressure of water – Marcet boiler	052
WL 210	Evaporation process	074
WL 220	Boiling process	076
WL 230	Condensation process	078
WL 320	Wet cooling tower	072
WL 372	Radial and linear heat conduction	056
WL 440	Free and forced convection	054

Contact

G.U.N.T. Gerätebau GmbH
Hanskampring 15 – 17
D-22885 Barsbüttel
Germany

Tel. +49 (0)40 67 08 54 - 0
Fax +49 (0)40 67 08 54 - 42
Email sales@gunt.de
Web www.gunt.de
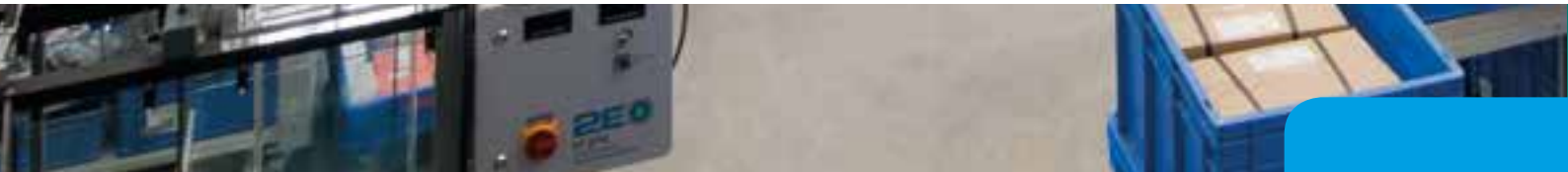
Visit our website
www.gunt.de