gunt HAMBURG

Equipment for Engineering Education

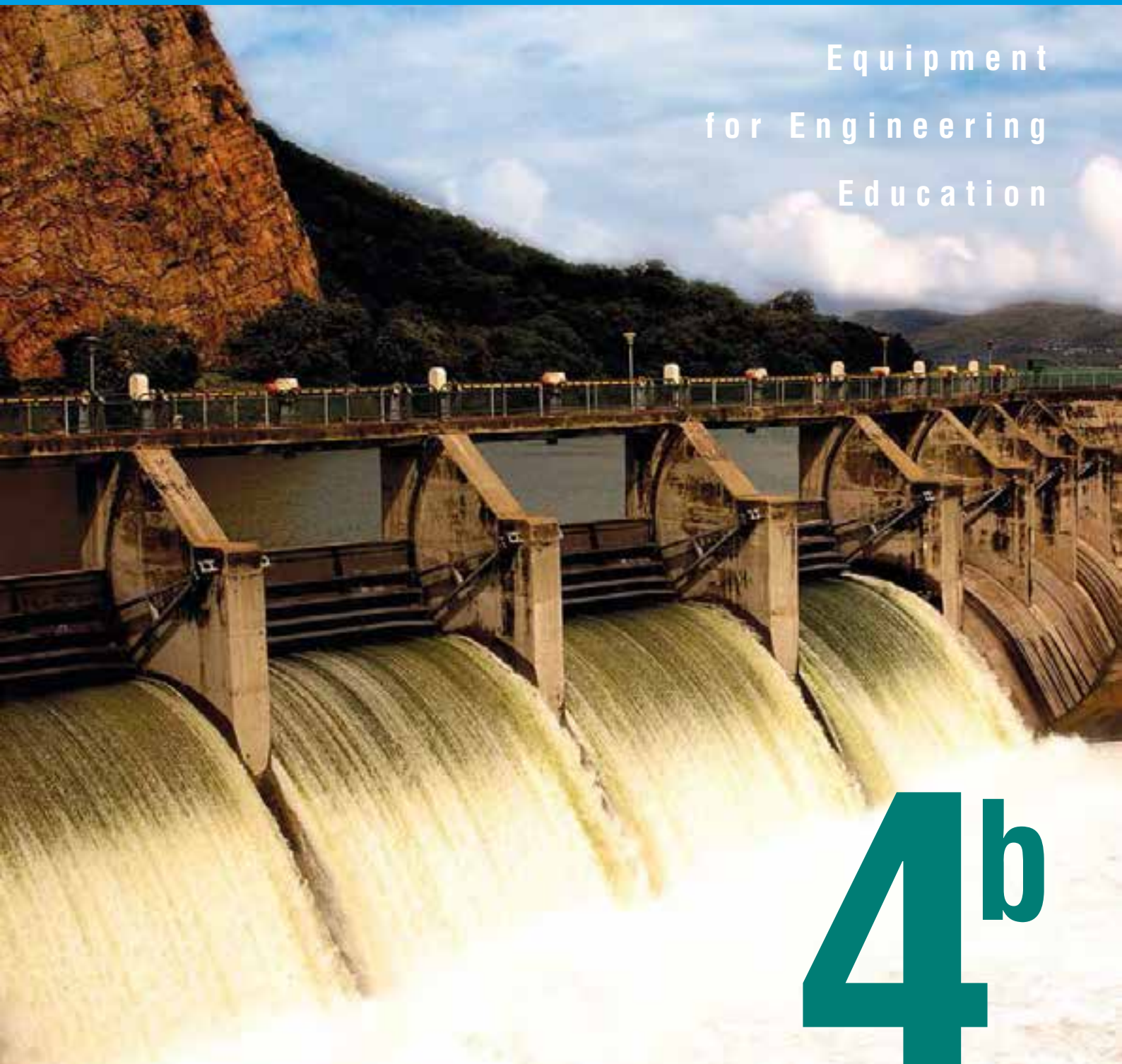

4b

HYDRAULICS FOR CIVIL ENGINEERING

Content from the fields of
- Civil Engineering
- Hydraulic Engineering
- Urban Water Management
- Environmental Engineering
- Coastal Engineering

WELCOME TO GUNT

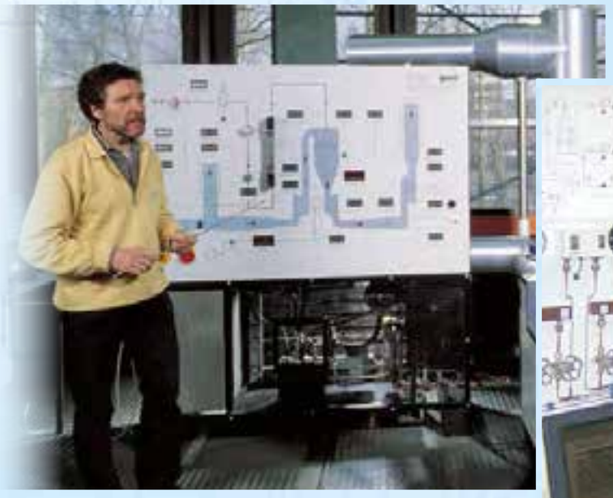

Your reliable and experienced partner for

- **teaching and training systems for innovative technical training**
- **experimentation and research equipment**

GUNT demonstration and experimentation equipment for

- **training in technical professions**
- **training of technical staff in trades and industry**
- **studies in engineering disciplines**

CONTENTS

HYDRAULICS FOR CIVIL ENGINEERING

CHAPTER	TITLE	PAGE
1	Fundamentals of Fluid Mechanics	6
2	Hydraulic Engineering	64
	Index	190
	Product Overview	195

IMPRINT

© 2016 by GUNT Gerätebau GmbH. Reproduction – in whole or in part – permitted only with written consent.
GUNT is a registered trademark. This means GUNT products are protected, and subject to copyright.
No liability can be accepted for any misprints. Subject to change without notice.

We would like to thank Prof. Bernhard Haber of the Bochum University of Applied Sciences, Department of Civil Engineering, Institute of Water and Environment, Centre for Hydraulic Engineering and Fluid Mechanics, for his kind and professional support on the topic of “Open-Channel Flow”.

Layout, typesetting and litho: Profi-Satz, Hamburg
Printed on non-chlorinated, environmentally friendly paper.

TEACHING AND LEARNING SYSTEMS FOR THE FIELD OF HYDRAULICS FOR CIVIL ENGINEERING

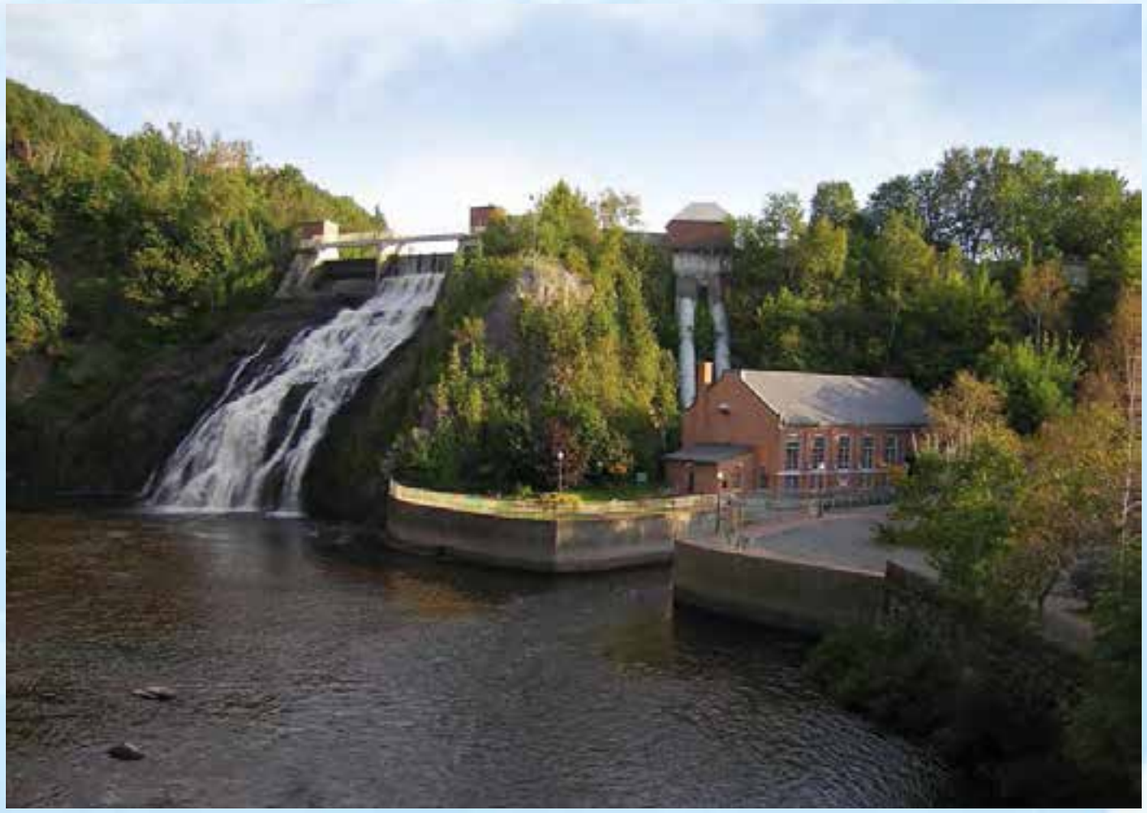

Fluid mechanics plays a key role in many fields of engineering. For engineers it is therefore crucial to understand the basic principles of fluid mechanics.

Structures for supplying water, drainage systems and the protection against water all fall within the scope of civil engineering. Certain areas from the overall field of fluid mechanics are of secondary importance in the civil engineering curriculum, such as the basic principles of compressible flow. To take this fact into account, in addition to our **Catalogue 4 "Fluid Mechanics"** we have compiled a self-contained **Catalogue 4b "Hydraulics for Civil Engineering".** The teaching and experimentation systems specifically consider the training needs of civil engineering.

Catalogue 4b is divided into two sections. The first section contains general principles of fluid mechanics that are relevant to multiple disciplines, such as basic equations, such as the continuity and Bernoulli equations, pipe flow and turbomachines. The second section covers the specific topics for civil engineering with a focus on hydraulic engineering. This section looks at open-channel flow, open-channel sediment transport and flow through porous media.

The subsections are preceded by information pages containing basic knowledge. These pages explain the technical and physical relationships in a way that is simple to understand, making it easy to jump into each subject area. The corresponding GUNT devices then facilitate the practical demonstration and investigation of the relationships.

LEARNING OBJECTIVES OF "HYDRAULICS FOR CIVIL ENGINEERING"		GUNT PRODUCTS
HYDROSTATICS	■ communicating vessels, pressure on flat surfaces, buoyancy, hydraulic paradox ■ floating stability	HM 115, HM 150.06
HYDRODYNAMICS	■ continuity equation, energy considerations (Bernoulli) ■ principle of linear momentum ■ laminar/turbulent flow, Reynolds number ■ potential flow, streamlines	HM 150.07, HM 150.08, HM 150.18, HM 150.10, HM 150.21
DISCHARGE FROM OPENINGS	■ horizontal flow from a tank ■ vertical flow from a tank ■ discharge under a gate	HM 150.09, HM 150.12, HM 160 – HM 162 and accessories
TURBOMACHINES	■ centrifugal pumps ■ turbines	HM 150.04, HM 150.16, HM 150.19, HM 150.20
DISCHARGE WITH FREE WATER LEVEL	■ flow formulae ■ relationship between specific energy and depth of discharge ■ flow transition ■ uniform and non-uniform discharge ■ change in cross-section ■ control structures (free and submerged overfall)	HM 160 – HM 162 and accessories
DETERMINING DISCHARGE IN AN OPEN CHANNEL	■ measuring weirs ■ velocity measurement ■ tracer method	HM 160 – HM 162 and accessories
TRANSIENT MOVEMENT OF WATER	■ in closed pipes (mass vibration) ■ with free surface: reservoir retention ■ with free surface: positive and negative surges, transient open-channel flow involving friction ■ with free surface: filling and emptying locks, tidal flow	HM 156, HM 143, HM 160 – HM 162 and accessories
WAVES	■ deep and shallow water waves ■ changing waves	HM 160 – HM 162 and accessories
SEDIMENT TRANSPORT	■ types of sediment transport ■ formulae for estimating transported masses	HM 166, HM 140, HM 168, HM 142
FLOW THROUGH POROUS MEDIA, GROUNDWATER FLOW	■ groundwater flow, aquifers ■ groundwater levels ■ Darcy's law, coefficient of permeability ■ lowering of groundwater ■ filters (gravel filters, geotextile filters) ■ seepage under structures ■ seepage through dams	HM 152, HM 165, HM 167, HM 169, HM 145, HM 141, CE 116

1 FUNDAMENTALS OF FLUID MECHANICS

HYDROSTATICS

Overview	Basic Knowledge: Fundamentals of Hydrostatics	8
HM 115	Hydrostatics Trainer	10
HM 150.06	Stability of Floating Bodies	12
HM 150.39	Floating Bodies for HM 150.06	14

HYDRODYNAMICS

Overview	Basic Knowledge: Fundamentals of Hydrodynamics	16
Overview	Experimental Units on the Fundamentals of Hydrodynamics	18
HM 150.18	Osborne Reynolds Experiment	20
HM 150.07	Bernoulli's Principle	22
HM 150.08	Measurement of Jet Forces	24
HM 150.21	Visualisation of Streamlines in an Open Channel	26
HM 150.10	Visualisation of Streamlines	28

FLOW FROM TANKS

HM 150.09	Horizontal Flow from a Tank	30
HM 150.12	Vertical Flow from a Tank	32

PIPE FLOW

Overview	Steady Flow of Incompressible Fluids	34
HM 150.01	Pipe Friction for Laminar / Turbulent Flow	36
HM 150.11	Losses in a Pipe System	38
HM 164	Open Channel and Closed Channel Flow	40
HM 111	Pipe Networks	42

TURBOMACHINES

Overview	Experimental Units from the Field of Turbomachinery	44
HM 150.19	Operating Principle of a Pelton Turbine	46
HM 150.20	Operating Principle of a Francis Turbine	48
HM 150.04	Centrifugal Pump	50
HM 150.16	Series and Parallel Configuration of Pumps	52

ACCESSORIES

Overview	The HM 150 Range: A Simple Introduction into the Fundamentals of Fluid Mechanics	54
HM 150	Base Module for Experiments in Fluid Mechanics	56

TRANSIENT FLOW

Overview	Transient Flow in Pipes and Surge Chambers	58
HM 156	Water Hammer and Surge Chamber	60
HM 143	Transient Drainage Processes in Storage Reservoirs	62

Visit our website www.gunt.de

BASIC KNOWLEDGE

FUNDAMENTALS OF HYDROSTATICS

Hydrostatics is the study of fluids at rest.

The experimental units from GUNT cover the basic principles of the following topics from the field of hydrostatics: hydrostatic pressure, buoyancy, surface tension, capillarity/adhesion.

Physics and properties of fluids

- pressure measurement with manometers and pressure sensors
- temperature measurement
- vapour pressure curve
- change of state of the gases

Forces

- Coriolis force
- surface tension and forces
- lift forces
- hydrostatic pressure and resultant forces

Hydrostatic pressure

The pressure in fluids at rest does not depend on the direction. It is linearly dependent on the amount of fluid over the element being studied, for example water pressure while diving.

The hydrostatic pressure for incompressible fluids that are not subject to gravity is calculated according to Pascal's law.

Pascal's law

The effect of a force ***F*** on a motionless liquid generates a pressure ***p*** within the liquid, which at any point acts equally in all directions. The pressure always acts perpendicular to the boundary surface ***A*** of the liquid.

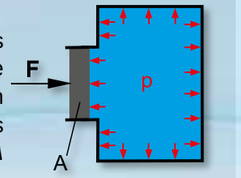

$$p = F/A$$

All force and pressure processes in liquids are based on this law.

Hydrostatic paradox

The hydrostatic pressure generates a force ***F*** on the area ***A***. If these areas are equal, this force only depends on the level ***h***; the shape of the vessel is irrelevant.

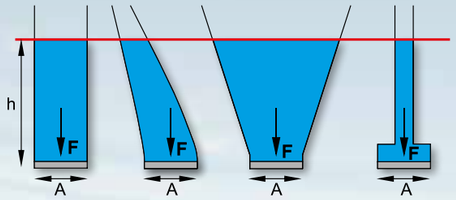

h level, F force, A area,
red line: *level*

Communicating vessels

Communicating vessels are tubes that are open at the top and interconnected at the bottom. Regardless of the shape and size of the tubes, the level of the fluid in them is the same.

Applications include water levels, locks and drain traps in sewers.

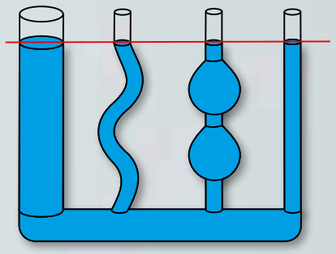

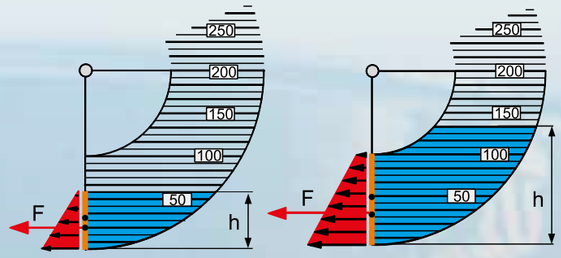

h level, F force, A effective area,
pressure profile, water level

Hydrostatic pressure on walls

In addition to the ground pressure of a fluid, it is often important to also know the hydrostatic pressure on boundary surfaces, for example in order to calculate the forces acting on the side walls (channels, aquariums, weirs).

Capillarity

Liquids in capillaries rise or fall due to molecular forces between the liquid and the wall or between the liquid and air. The height of rise in the capillary depends on the surface tension and the diameter of the capillary.

In wetting liquids (e.g. water) the surface level in the capillary rises. In non-wetting liquids (e.g. mercury) the level falls.

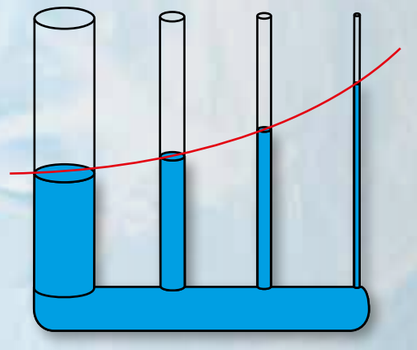

Stability of floating bodies

In order to be able to assess whether a body floats stably or could capsize, it is necessary to determine its metacentre ***M***. The location of the metacentre depends on the centre of gravity of the displaced water ***A*** and the angle of heel. The body floats stably when the metacentre ***M*** is located above the centre of gravity ***S***. Then the restoring moment ***Md*** has a 'righting' effect.

The distance between the centre of gravity and the metacentre is known as the metacentric height ***z***.

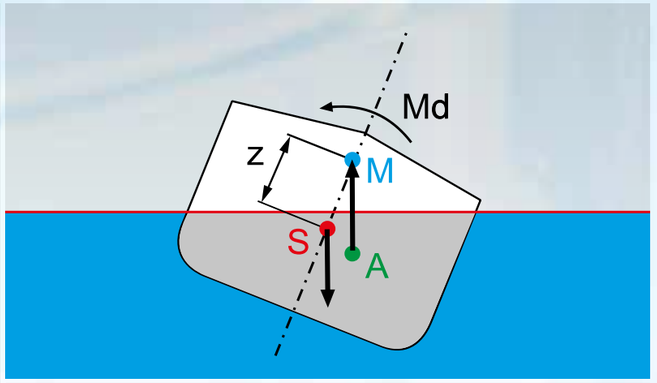

M *metacentre,* ***S*** *centre of gravity,*
A *centre of buoyancy,* ***z*** *metacentric height,*
Md *restoring moment that straightens the floating body back up,*
red line *water level*

HM 115 Hydrostatics Trainer

*** Basic experiments in hydrostatics**

*** Wide range of experiments**

*** Closed water circuit with tank and pump**

Technical Description

Hydrostatics is the study of fluids at rest. Phenomena occurring as a result of hydrostatic pressure are analysed and the force effect determined. Hydrostatic aspects play a crucial role in various areas of engineering, such as in plumbing and domestic engineering, in pump manufacturing, in aerospace and in shipping (buoyancy, load on the sides of a ship).

The HM 115 trainer can be used to conduct experiments in the field of hydrostatics, such as ground pressure measurement or demonstrating Boyle's law. Determining the centre of pressure completes the range of experiments. Furthermore, experimental units for studying capillarity and buoyancy are included. The hydrostatic pressure and surface tension are measured. Additionally, one experiment uses a Pitot tube and a tube for static pressure to study the pressure components in a flowing fluid.

To make the functions and processes visible, the tanks and the experimental units use a transparent design. Tanks and pipes are made entirely of plastic.

Various pressure gauges are available for measuring pressure and differential pressure of the liquid fluid, such as a Pitot tube, tube for static pressure a pressure sensor with digital display, twin tube manometers or a differential pressure manometer. A diaphragm manometer and a Bourdon tube manometer indicate the pressure of the gaseous fluid.

The trainer has its own air and water supply. The closed water circuit includes a supply tank with submersible pump. A compressor is included to generate negative pressures for the experiments with air.

The well-structured instructional material sets out the fundamentals and provides a step-by-step guide through the experiments.

Learning Objectives / Experiments

- study of buoyancy on a variety of bodies
- study of the density of liquids
- hydrostatic pressure, Pascal's law
- communicating vessels
- determination of the centre of pressure
- study of surface tensions
- demonstration of capillarity
- Boyle's law
- study of static and dynamic pressure component in flowing fluid
- familiarisation with various methods of pressure measurement

HM 115 Hydrostatics Trainer

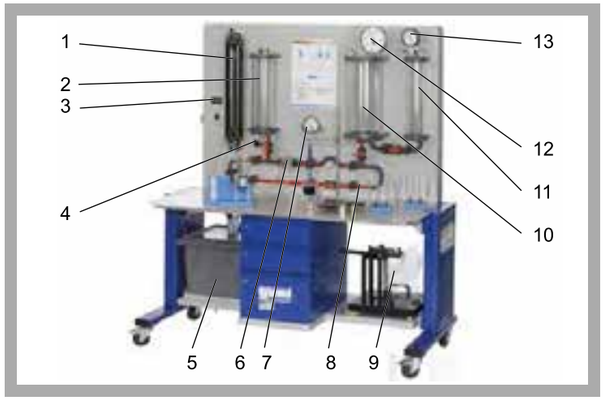

1 twin tube manometers, 2 tank, 3 digital pressure display, 4 pressure sensor, 5 supply tank with submersible pump, 6 Pitot tube and tube for static pressure, 7 differential pressure manometer, 8 pipe section, 9 hydrostatic pressure in liquids, 10 pressure vessel, 11 pressure vessel, 12 Bourdon tube manometer, 13 diaphragm manometer

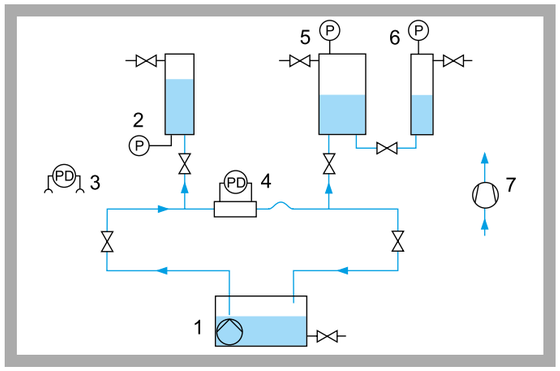

1 supply tank with submersible pump, 2 tank with pressure sensor, 3 twin tube manometers, 4 Pitot tube + tube for static pressure with differential pressure manometer, 5 pressure vessel with Bourdon tube manometer, 6 pressure vessel with diaphragm manometer, 7 compressor; P pressure, PD differential pressure

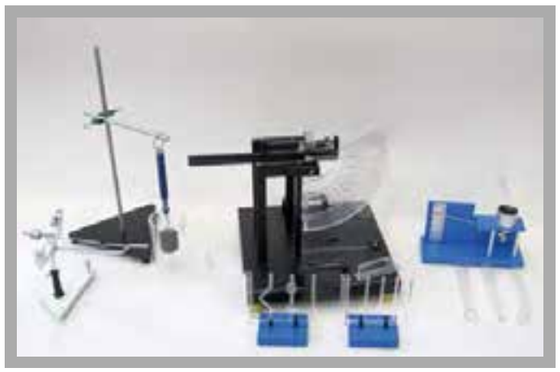

Accessories for a wide range of experiments

Specification

[1] comprehensive experimental introduction to hydrostatics
[2] transparent tank for observing the processes
[3] wide range of accessories included: compressor for generating negative pressures, bottom pressure apparatus, two areometers
[4] 1 experimental unit each: measuring the buoyancy force, investigation of the hydrostatic pressure in liquids, measuring the surface tension, communicating vessels, capillarity
[5] Pitot tube for determining the total pressure and tube for static pressure
[6] instruments: pressure sensor with digital display, differential pressure manometer, twin tube manometers, diaphragm manometer, Bourdon tube manometer

Technical Data

Pump
- power consumption: 250W
- max. flow rate: 9m³/h
- max. head: 7,6m

Compressor
- power: 65W
- delivery side: 2000mbar
- intake side: 240mbar

3 tanks
- height 500mm
- d=100mm, d=133mm, d=200mm

Supply tank for water: 55L
2 areometers with different measuring ranges

Measuring ranges
- pressure: 2x -1...1,5bar
- differential pressure: 0...500mmWC
- differential pressure: 0...0,4bar
- density: 1x 0,8...1g/cm³, 1x 1...1,2g/cm³

Dimensions and Weight

LxWxH: 1760x840x1950mm
Weight: approx. 250kg

Required for Operation

230V, 50/60Hz, 1 phase or 120V, 60Hz/CSA, 1 phase

Scope of Delivery

1 trainer
1 compressor
1 bottom pressure device
2 areometers
1 wedge-shaped tank
1 experimental unit each:
surface tension, hydrostatic pressure in fluids, buoyancy force, capillarity, communicating vessels
1 set of instructional material

Order Details

070.11500 HM 115 Hydrostatics Trainer

G.U.N.T Gerätebau GmbH, Hanskampring 15-17, D-22885 Barsbüttel, Phone +49 (40) 67 08 54-0, Fax +49 (40) 67 08 54-42, E-mail sales@gunt.de, Web http://www.gunt.de
We reserve the right to modify our products without any notifications.

HM 150.06 Stability of Floating Bodies

*** Stability of a floating body**

*** Determining the metacentre**

*** Other floating bodies with different shapes of frame optionally available, HM 150.39**

Technical Description

In hydrostatics, the metacentre is an important point to be considered when assessing the stability of floating bodies. Stability refers to the ability of a ship to right itself from a heeled position. The metacentre is the intersection of the buoyancy vector and the vessel's axis of symmetry at a certain heel.

The HM 150.06 unit can be used to study the stability of a floating body and to determine the metacentre graphically. In addition, the buoyancy of the floating body can also be determined. The experiment is easy to set up and is particularly suitable for practical work in small groups.

The experiment is conducted in a tank filled with water. A transparent body with a rectangular frame cross-section is used as the floating body. Clamped weights that can be moved horizontally and vertically make it possible to adjust the centre of gravity and the heel.

The position of the clamped weights can be read on scales. A clinometer indicates the heel.

The accessory HM 150.39 is available as an optional extra for further experiments with different frame shapes.

The well-structured instructional material sets out the fundamentals and provides a step-by-step guide through the experiments.

Learning Objectives / Experiments

Study and determination of
- buoyancy, centre of buoyancy
- centre of gravity, metacentre, stability
- heel

HM 150.06 Stability of Floating Bodies

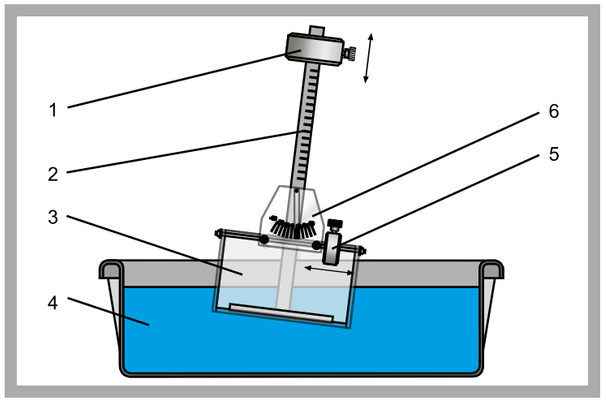

1 adjustment of the centre of gravity, 2 scale, 3 floating body, 4 tank with water, 5 adjustment of the heel, 6 clinometer with scale

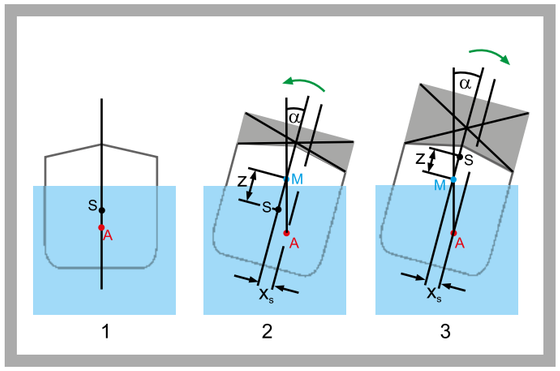

1 stable position, 2 stable position despite load, metacentre above the centre of gravity, 3 unstable position due to load, metacentre under the centre of gravity; green arrow: restoring moment, M metacentre, S centre of gravity, A centre of buoyancy, z metacentric height, α angle of heel

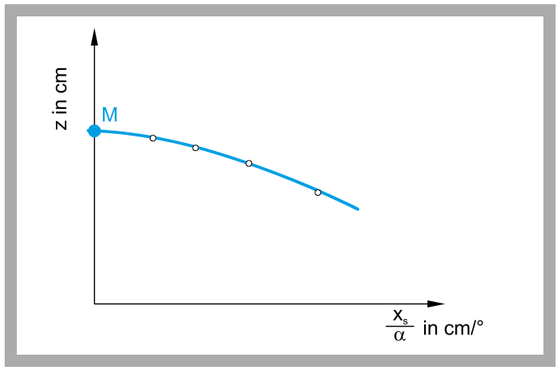

Graphical determination of the metacentre: M metacentre, z vertical centre of gravity, x_s/a stability gradient

Specification

[1] investigating the stability of a floating body and determining the metacentre
[2] transparent floating body with rectangular frame cross-section
[3] one horizontally movable clamped weight for adjusting the heel
[4] one vertically movable clamped weight for adjusting the centre of gravity
[5] clinometer with scale for displaying the heel
[6] other floating bodies with different shapes of frame available as accessories: HM 150.39

Technical Data

Floating body
- LxWxH: 300x130x190mm
- mast height: 400mm

Horizontal scale: 180mm
Vertical scale: 400mm
Height scale of the floating body: 120mm
Clinometer scale: +/- 35°
Weights
- floating body without clamped weights: 2,8kg
- vertical clamped weight: 550g
- horizontal clamped weight: 193g

Tank for water: 50L

Dimensions and Weight

LxWxH: 660x450x220mm (tank)
Empty weight: approx. 6kg

Scope of Delivery

1 experimental unit
1 set of instructional material

Order Details

070.15006 HM 150.06 Stability of Floating Bodies

G.U.N.T Gerätebau GmbH, Hanskampring 15-17, D-22885 Barsbüttel, Phone +49 (40) 67 08 54-0, Fax +49 (40) 67 08 54-42, E-mail sales@gunt.de, Web http://www.gunt.de
We reserve the right to modify our products without any notifications.

HM 150.39 *Floating Bodies for HM 150.06*

*** Stability of floating bodies with different frame shapes**

Technical Description

The HM 150.39 accessory includes two transparent floating bodies with different frame shapes (hard chine and round bilge). The floating bodies are used together with HM 150.06 and extend this device's range of experiments.

The design of the floating bodies and the possible experiments are similar to those of HM 150.06.

Learning Objectives / Experiments

- comparison of two different frame shapes: hard chine and round bilge

Scope of Delivery

2 floating bodies
1 manual

Specification

[1] determination of the metacentre of 2 floating bodies with different frame shapes
[2] 1 shape of frame: hard chine, 1 shape of frame: round bilge
[3] for use with HM 150.06

Technical Data

Hard chine frame: LxWxH 300x200x140mm
Round bilge frame: LxWxH 300x200x100mm
Mast length: 240mm
Horizontal scale: 180mm
Vertical scale: 240mm
Height scale of the floating body: 120mm
Scale for heel: +/- 35°
Weights
- floating body without clamped weights: hard chine: 3,6kg, round bilge: 2,5kg
- vertical clamped weight: 550g
- horizontal clamped weight: 193g

Dimensions and Weight

LxWxH: 310x210x300mm
Weight: approx. 7kg total

Order Details

070.15039 HM 150.39 Floating Bodies for HM 150.06

G.U.N.T Gerätebau GmbH, Hanskampring 15-17, D-22885 Barsbüttel, Phone +49 (40) 67 08 54-0, Fax +49 (40) 67 08 54-42, E-mail sales@gunt.de, Web http://www.gunt.de
We reserve the right to modify our products without any notifications.

THE CATALOGUE STRUCTURE IN THE PRODUCT RANGE 4

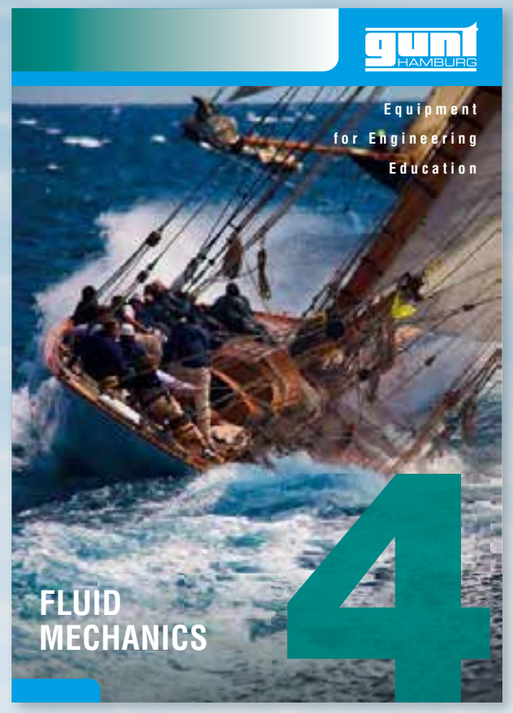

Catalogue 4
“Fluid Mechanics”

- fundamentals of fluid mechanics
- steady flow
- flow around bodies
- examples of transient flow
- hydraulic fluid energy machines
- components in piping systems and plant design
- fluidic experimental plants

Catalogue 4a
“Fluid Machinery”

- fundamentals
- power engines
- machines
- power plants and applied cycles
- equipment series

BASIC KNOWLEDGE

FUNDAMENTALS OF HYDRODYNAMICS

Hydrodynamics is concerned with the study and description of fluids in motion. The main emphasis is the teaching of the conservation laws of mass, energy and momentum.

Flowing fluids possess kinetic energy. This energy can be converted into potential energy (pressure, height) and vice versa.

Typical keywords include Bernoulli's equation, continuity equation and conservation of momentum. For ease of understanding, it is mostly steady states of incompressible fluids that are considered.

Other topics within hydrodynamics

- pipe flow (laminar/turbulent) (chapter 1; for more details see programme area 4)
- methods of flow rate measurement (chapter 1; for more details see programme area 4)
- open-channel flow (chapter 2)
- flow around bodies (chapter 1; for more details see programme area 4)
- turbomachines (chapter 1; for more details see programme area 4)
- flow of compressible fluids (programme area 4)

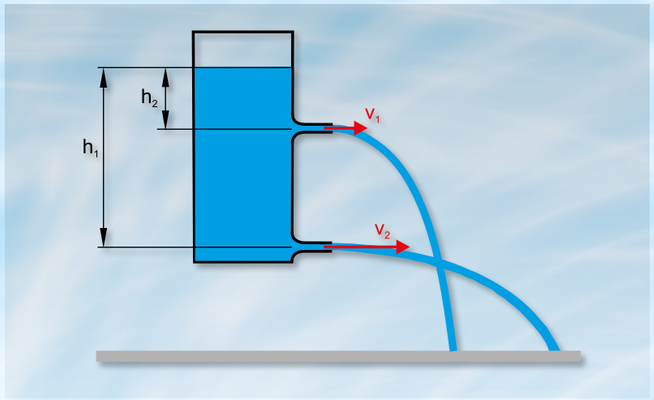

h head, distance between discharge and water level,
v velocity

Flow from a tank

The flow from a tank can be regarded as both stationary and transient. In the steady case the fill level, and thus the width of the jet, remains constant (e.g. discharge under a weir). The outlet velocity only depends on the head ***h*** and is calculated according to Torricelli's law.

$$v = \sqrt{2gh}$$

v velocity, g gravitational acceleration,
h distance between discharge and water level

When the tank is emptying during the discharge process, it is in what is referred to as the transient state.

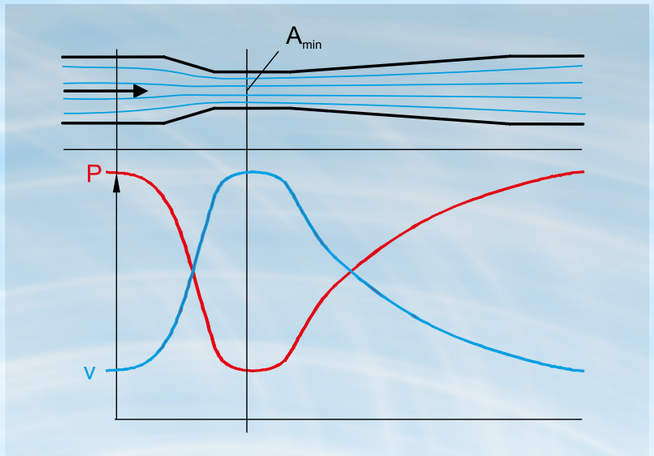

velocity, static pressure curve

Venturi nozzle

The velocity of the flowing fluid is at its greatest at the narrowest cross-section (**continuity equation** *A·v = const*). Bernoulli discovered that a part of the pressure energy is converted into kinetic energy. When velocity increases it therefore results in a drop in pressure, so that the lowest pressure occurs in the narrowest cross-section. **Bernoulli's equation** states that the energy of a frictionlessly flowing, incompressible fluid is constant.

Applications include water jet pumps, carburettors, flow measurement

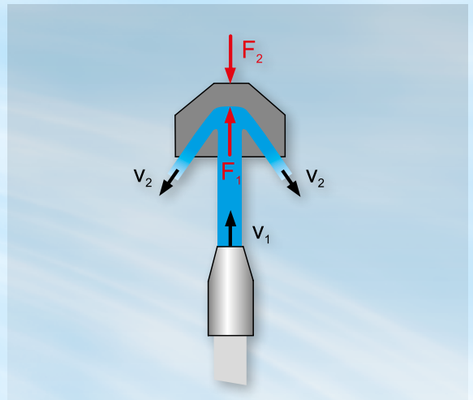

F_1 jet force, F_2 reaction force,
v_1 jet velocity,
v_2 velocity after deflection

Jet forces

If the flow velocity changes then the momentum of a fluid changes according to the magnitude and/or direction. This results in forces that, for example, could drive a free jet turbine or a water vehicle.

These forces can be easily demonstrated and measured when the jet hits the wall and is deflected.

Pressure in a flowing fluid

The energy of the flowing fluid is determined by pressure, velocity and density. The total pressure is made up of a static and a dynamic component. The dynamic component grows quadratically as the flow velocity increases. A flowing fluid can contain potential, kinetic and pressure energy. In the ideal case the total energy is conserved. In this case, the proportions may vary, so for example pressure energy is converted into kinetic energy.

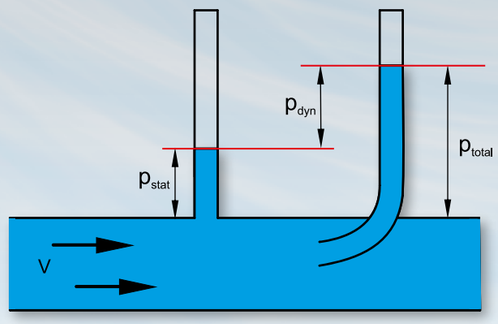

v velocity, p_{stat} static pressure, p_{dyn} dynamic pressure,
p_{total} total pressure

Vortex formation

Vortices occur when, within a fluid, a portion of the fluid flows more quickly than the rest of the fluid. This results in a velocity gradient within the fluid. Energy is dissipated in vortices.

Free vortices (potential vortex, e.g. whirlpool) are formed during discharge from a tank, for example. With free vortices all fluid particles move in concentric circular paths without rotating around their own axis. Free vortices are formed solely by hydrodynamic forces.

Forced vortices are rotational and are formed by external forces, such as a stirrer.

EXPERIMENTAL UNITS ON THE FUNDAMENTALS OF HYDRODYNAMICS

CONTINUITY EQUATION, BERNOULLI

HM 150.07 BERNOULLI'S PRINCIPLE

- investigation and verification of Bernoulli's law
- recording pressure distribution in the venturi nozzle
- 6 tube manometers for displaying the static pressure and a single tube manometer for displaying the total pressure

LAMINAR AND TURBULENT FLOW

HM 150.18 OSBORNE REYNOLDS EXPERIMENT

- representation of laminar and turbulent flow and the transition zone
- determining the critical Reynolds number
- visualisation of flow conditions using ink as a contrast medium

DISCHARGE FROM OPENINGS

HM 150.09 HORIZONTAL FLOW FROM A TANK

- visualising the trajectory of a water jet with HM 150.09
- investigations on the outlet jet (diameter, velocity) with HM 150.12
- determination of the contraction coefficient in two experimental units

HM 150.12 VERTICAL FLOW FROM A TANK

VISUALISATION OF STREAMLINES

HM 150.10 VISUALISATION OF STREAMLINES

- visualisation of streamlines using ink as a contrast medium
- various models included: drag bodies and changes in cross-section
- influence of sources and sinks

HM 150.21 VISUALISATION OF STREAMLINES IN AN OPEN CHANNEL

- demonstration of flow phenomena in open channels
- incident flow and flow around various weirs and drag bodies
- visualisation of streamlines using ink as a contrast medium

JET FORCE

HM 150.08 MEASUREMENT OF JET FORCES

- investigation of jet forces and demonstration of the momentum equation
- four different shaped deflectors: flat surface, oblique surface, semi-circular surface, conical surface
- influence of mass flow and deflection

HM 150.18 Osborne Reynolds Experiment

Technical Description

The Osborne Reynolds experiment is used to display laminar and turbulent flows. During the experiment it is possible to observe the transition from laminar to turbulent flow after a limiting velocity. The Reynolds number is used to assess whether a flow is laminar or turbulent.

With HM 150.18 the streamlines during laminar or turbulent flow are displayed in colour with the aid of an injected contrast medium (ink). The experimental results can be used to determine the critical Reynolds number.

The experimental unit consists of a transparent pipe section through which water flows, with flow-optimised inlet. A valve can be used to adjust the flow rate in the pipe section. Ink is injected into the flowing water. A layer of glass beads in the water tank ensures an even and low-turbulence flow.

The experimental unit is positioned easily and securely on the work surface of the HM 150 base module. The water is supplied and the flow rate measured by HM 150. Alternatively, the experimental unit can be operated by the laboratory supply.

The well-structured instructional material sets out the fundamentals and provides a step-by-step guide through the experiments.

Learning Objectives / Experiments

- visualisation of laminar flow
- visualisation of the transition zone
- visualisation of turbulent flow
- determination of the critical Reynolds number

*** Visualisation of laminar and turbulent flow**

*** Determining the critical Reynolds number**

*** Traditional experiment based on the model of the British physicist Osborne Reynolds**

HM 150.18 Osborne Reynolds Experiment

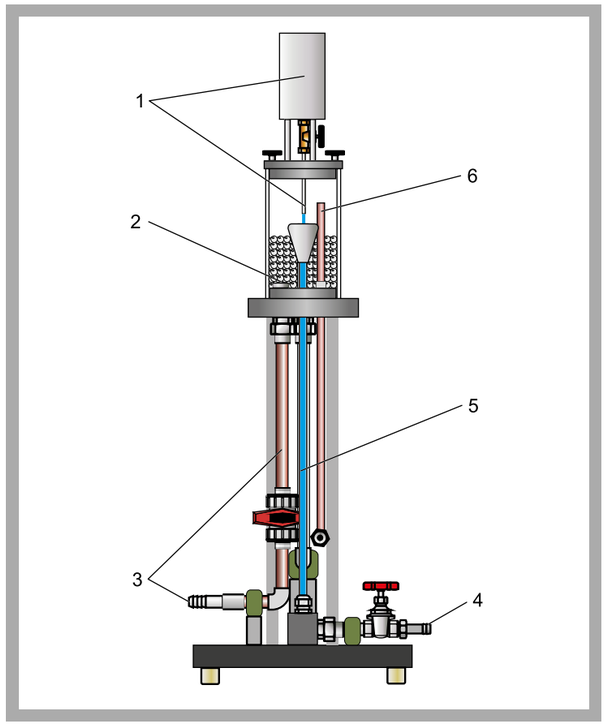

1 tank for ink with inlet pipe, 2 overflow, 3 water supply, 4 water drain, 5 pipe section with valve, 6 water tank with glass beads

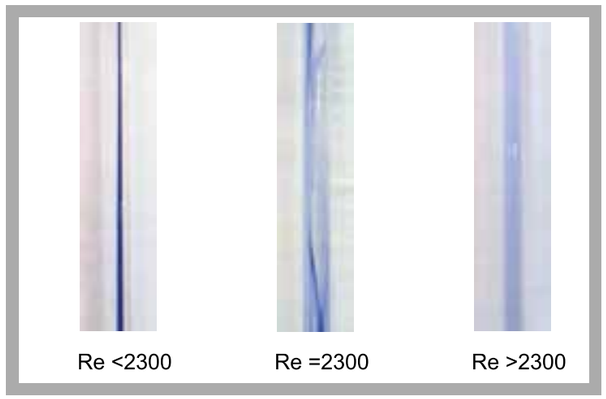

Flow conditions from left to right: laminar flow, transition from laminar to turbulent flow, turbulent flow

Specification

[1] visualisation of laminar and turbulent flow in the Osborne Reynolds experiment
[2] water as flowing medium and ink as contrast medium
[3] vertical glass pipe section
[4] water tank with glass beads to stabilise the flow
[5] flow rate in the pipe section can be adjusted via a valve
[6] flow rate determined by HM 150 base module
[7] water supply using HM 150 base module or via laboratory supply

Technical Data

Water tank
- capacity: 2200mL

Pipe section
- length: 675mm
- inside diameter: 10mm

Tank for ink
- capacity: approx. 250mL

Dimensions and Weight

LxWxH: 400x400x1140mm
Empty weight: approx. 16kg

Required for Operation

HM 150 (closed water circuit) or alternatively water connection and drain

Scope of Delivery

1 experimental unit
1 bag of glass beads
1L ink
1 set of instructional material

Order Details

070.15018 HM 150.18 Osborne Reynolds Experiment

G.U.N.T Gerätebau GmbH, Hanskampring 15-17, D-22885 Barsbüttel, Phone +49 (40) 67 08 54-0, Fax +49 (40) 67 08 54-42, E-mail sales@gunt.de, Web http://www.gunt.de
We reserve the right to modify our products without any notifications.

HM 150.07 Bernoulli's Principle

*** Investigation and verification of Bernoulli's principle**

*** Static pressures and total pressure distribution along the Venturi nozzle**

*** Determination of the flow coefficient at different flow rates**

Learning Objectives / Experiments

- energy conversion in divergent/convergent pipe flow
- recording the pressure curve in a Venturi nozzle
- recording the velocity curve in a Venturi nozzle
- determining the flow coefficient
- recognising friction effects

Technical Description

Bernoulli's principle describes the relationship between the flow velocity of a fluid and its pressure. An increase in velocity leads to a reduction in pressure in a flowing fluid, and vice versa. The total pressure of the fluid remains constant. Bernoulli's equation is also known as the principle of conservation of energy of the flow.

The HM 150.07 experimental unit is used to demonstrate Bernoulli's principle by determining the pressures in a Venturi nozzle.

The experimental unit includes a pipe section with a transparent Venturi nozzle and a movable Pitot tube for measuring the total pressure. The Pitot tube is located within the Venturi nozzle, where it is displaced axially. The position of the Pitot tube can be observed through the Venturi nozzle's transparent front panel.

The Venturi nozzle is equipped with pressure measuring points to determine the static pressures. The pressures are displayed on the six tube manometers. The total pressure is measured by the Pitot tube and displayed on another single tube manometer.

The experimental unit is positioned easily and securely on the work surface of the HM 150 base module. The water is supplied and the flow rate measured by HM 150. Alternatively, the experimental unit can be operated by the laboratory supply.

The well-structured instructional material sets out the fundamentals and provides a step-by-step guide through the experiments.

HM 150.07 Bernoulli's Principle

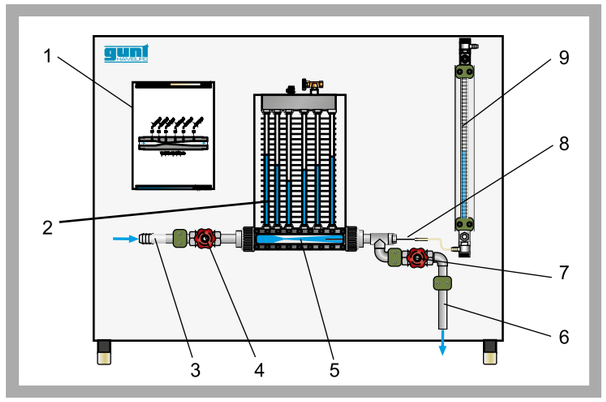

1 diagram, 2 tube manometers (static pressures), 3 water supply, 4 valve, 5 Venturi nozzle, 6 water outlet, 7 valve for water outlet, 8 Pitot tube, 9 single tube manometer (total pressure)

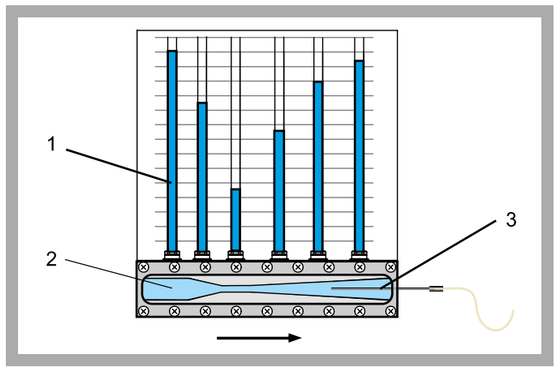

Measuring the pressures in a Venturi nozzle
1 tube manometers for displaying the static pressures, 2 Venturi nozzle with measuring points, 3 Pitot tube for measuring the total pressure, axially movable

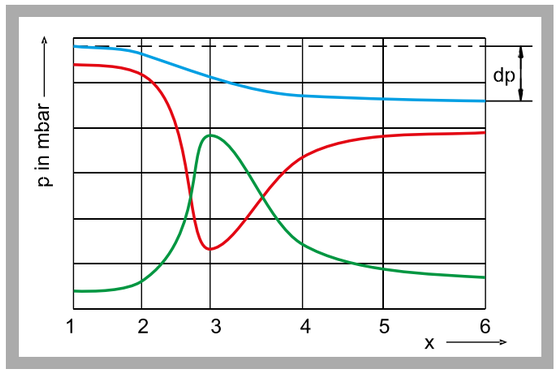

Pressure curve in the Venturi nozzle: blue: total pressure, red: static pressure, green: dynamic pressure; x pressure measuring points, p pressure

Specification

[1] familiarisation with Bernoulli's principle
[2] Venturi nozzle with transparent front panel and measuring points for measuring the static pressures
[3] axially movable Pitot tube for determining the total pressure at various points within the Venturi nozzle
[4] 6 tube manometers for displaying the static pressures
[5] single tube manometer for displaying the total pressure
[6] flow rate determined by HM 150 base module
[7] water supply using HM 150 base module or via laboratory supply

Technical Data

Venturi nozzle
- A: 84...338mm²
- angle at the inlet: 10,5°
- angle at the outlet: 4°

Pitot tube
- movable range: 0...200mm
- diameter: 4mm

Pipes and pipe connectors: PVC

Measuring ranges
- static pressure: 0...290mmWC
- total pressure: 0...370mmWC

Dimensions and Weight

LxWxH: 1100x680x900mm
Weight: approx. 28kg

Required for Operation

HM 150 (closed water circuit) or alternatively water connection and drain

Scope of Delivery

1 experimental unit
1 set of instructional material

Order Details

070.15007 HM 150.07 Bernoulli's Principle

G.U.N.T Gerätebau GmbH, Hanskampring 15-17, D-22885 Barsbüttel, Phone +49 (40) 67 08 54-0, Fax +49 (40) 67 08 54-42, E-mail sales@gunt.de, Web http://www.gunt.de
We reserve the right to modify our products without any notifications.

HM 150.08 Measurement of Jet Forces

Technical Description

During deceleration, acceleration and deflection of a flowing fluid, there is a change of velocity and thus a change in momentum. Changes in momentum result in forces. In practice, the motive forces are used to convert kinetic energy into work done, for example in a Pelton turbine.

In HM 150.08 jet forces are generated and studied with the aid of a water jet that acts on and is diverted by an interchangeable deflector.

The experimental unit includes a transparent tank, a nozzle, four interchangeable deflectors with different deflection angles and a weight-loaded scale. The force of the water jet is adjusted via the flow rate.

Experiments study the influence of flow velocity and flow rate as well as of different deflection angles. The jet forces generated by the water jet are measured on the weight-loaded scale. The forces are calculated using the momentum equation and compared with the measurements.

The experimental unit is positioned easily and securely on the work surface of the HM 150 base module. The water is supplied and the flow rate measured by HM 150. Alternatively, the experimental unit can be operated by the laboratory supply.

The well-structured instructional material sets out the fundamentals and provides a step-by-step guide through the experiments.

Learning Objectives / Experiments

- demonstration of the principle of linear momentum
- study of the jet forces
- influence of flow rate and flow velocity
- influence of different deflection angles

*** Investigation of jet forces on deflectors**

*** Demonstration of the principle of linear momentum**

*** 4 interchangeable deflectors with different deflection angles**

HM 150.08 Measurement of Jet Forces

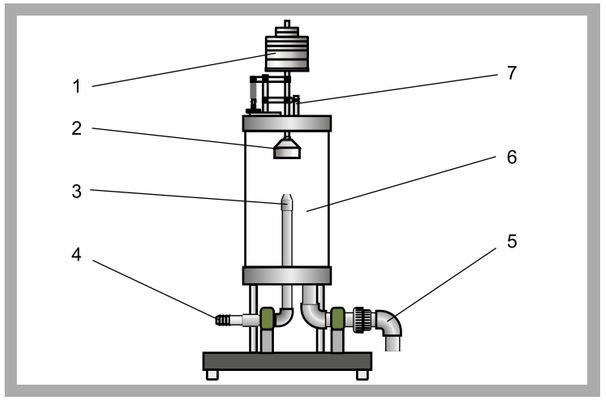

1 weight, 2 deflector, 3 nozzle, 4 water supply, 5 water drain, 6 tank, 7 lever apparatus

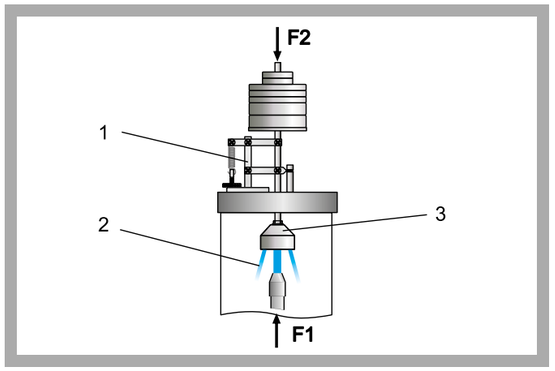

Measurement of the jet forces via the weight-loaded scale
1 lever apparatus, 2 deflected water jet, 3 deflector with conical surface;
F1 jet force, F2 weight force

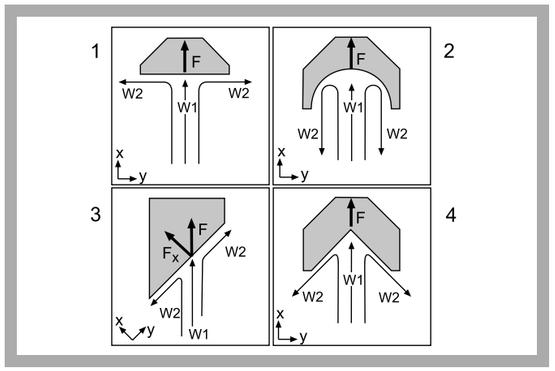

Distribution of velocities v and forces F on deflectors
1 deflector with flat surface, 2 deflector with semi-circular surface, 3 deflector with oblique surface, 4 deflector with conical surface

Specification

[1] investigation of jet forces and demonstration of the principle of linear momentum
[2] tank made of transparent material for observing the experiments
[3] nozzle for generating the water jet
[4] jet force can be adjusted via flow rate
[5] four different shaped deflectors: flat surface, oblique surface, semi-circular surface, conical surface
[6] measurement of the jet forces via the weight-loaded scale
[7] flow rate determined by HM 150 base module
[8] water supply using HM 150 base module or via laboratory supply

Technical Data

Tank
- inner diameter: 200mm
- height: 340mm

Nozzle
- diameter: 10mm

Deflector
- flat surface: 90°
- oblique surface: 45°/135°
- semi-circular surface: 180°
- conical surface: 135°

Weights
- 4x 0,2N
- 3x 0,3N
- 2x 1N
- 2x 2N
- 2x 5N

Dimensions and Weight

LxWxH: 400x400x880mm
Weight: approx. 23kg

Required for Operation

HM 150 (closed water circuit) or alternatively water connection and drain

Scope of Delivery

1 experimental unit
1 set of weights
4 deflectors
1 set of instructional material

Order Details

070.15008 HM 150.08 Measurement of Jet Forces

G.U.N.T Gerätebau GmbH, Hanskampring 15-17, D-22885 Barsbüttel, Phone +49 (40) 67 08 54-0, Fax +49 (40) 67 08 54-42, E-mail sales@gunt.de, Web http://www.gunt.de
We reserve the right to modify our products without any notifications.

HM 150.21 *Visualisation of Streamlines in an Open Channel*

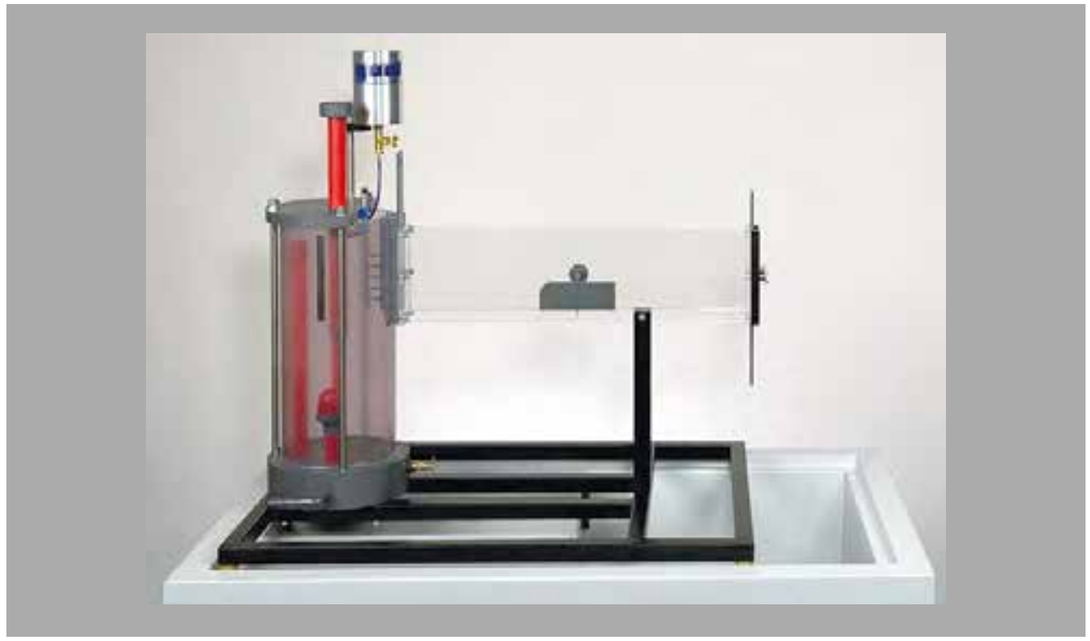

*** Flow around various drag bodies**

*** Incident flow of different weirs**

*** Ink as contrast medium for visualising the streamlines**

Technical Description

HM 150.21 can be used to visualise flow around drag bodies and flow phenomena in open channels.

Either a drag body or weir is fixed in the experimental flume. The streamlines are made visible by injecting a contrast medium. The experimental flume is made of transparent material so that the streamlines and the formation of vortices can easily be observed. The water level in the experimental flume can be adjusted via a sluice gate at the inlet and via a weir at the outlet.

There are two weirs and four different drag bodies available for the experiments. A stabiliser ensures an even and non-vortical flow of water.

The experimental unit is positioned easily and securely on the work surface of the HM 150 base module. The water is supplied by HM 150. Alternatively, the experimental unit can be operated by the laboratory supply.

The well-structured instructional material sets out the fundamentals and provides a step-by-step guide through the experiments.

Learning Objectives / Experiments

- how differently shaped weirs affect the flow
- visualisation of streamlines for flow incident to a weir
- visualisation of streamlines when flowing around various drag bodies

HM 150.21 *Visualisation of Streamlines in an Open Channel*

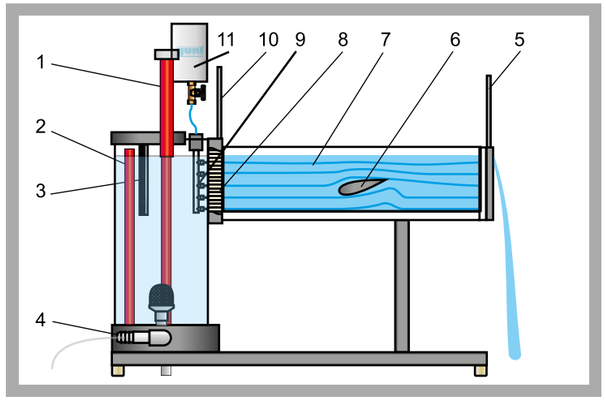

1 adjustable overflow, 2 tank, 3 scale, 4 water supply from HM 150, 5 weir at the water outlet, 6 drag body, 7 experimental flume, 8 flow straightener, 9 distributor for contrast medium, 10 sluice gate at the water inlet to the experimental flume, 11 tank for contrast medium

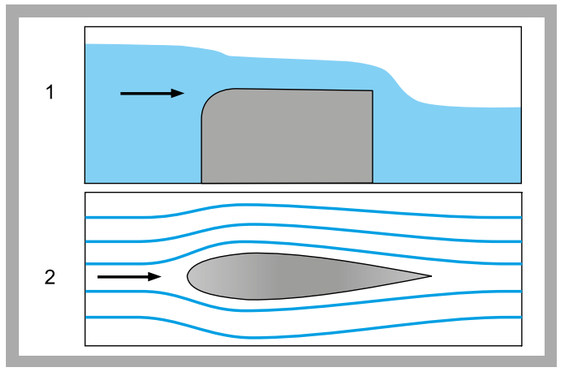

1 incident flow at the broad-crested weir, 2 flow around a streamlined body

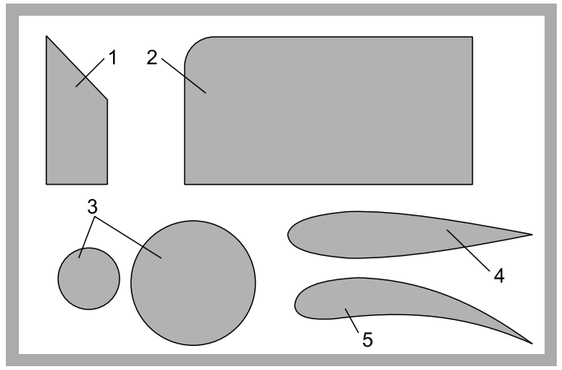

Drag bodies and weirs supplied
1 sharp-crested weir, 2 broad-crested weir, 3 cylinders, 4 streamlined body, 5 guide vane profile

Specification

[1] visualisation of streamlines during incident flow and flow around various weirs and drag bodies
[2] transparent experimental flume
[3] incident flow demonstrated on two weirs
[4] demonstration of flow around four different drag bodies
[5] contrast medium: ink
[6] distributor for contrast medium with seven nozzles
[7] water level in the experimental flume adjustable via sluice gate at the water inlet and weir at the water outlet
[8] flow straightener for even, non-vortical water inlet
[9] water supply using HM 150 base module or via laboratory supply

Technical Data

Experimental flume
- LxWxH: 625x20x150mm

Contrast medium: ink
Injection of the contrast medium
- 7 nozzles

Tank for water: 12,5L
Tank for ink: 200mL
Drag bodies
- small cylinder, diameter: 35mm
- large cylinder, diameter: 60mm
- streamlined body
- guide vane profile

Weirs
- broad-crested weir
- sharp-crested weir

Dimensions and Weight

LxWxH: 895x640x890mm
Weight: approx. 24kg

Required for Operation

HM 150 (closed water circuit) or alternatively water connection and drain

Scope of Delivery

1 experimental flume
1 set of drag bodies and weirs
1L of ink
1 set of tools
1 set of instructional material

Order Details

070.15021 HM 150.21 Visualisation of Streamlines in an Open Channel

G.U.N.T Gerätebau GmbH, Hanskampring 15-17, D-22885 Barsbüttel, Phone +49 (40) 67 08 54-0, Fax +49 (40) 67 08 54-42, E-mail sales@gunt.de, Web http://www.gunt.de
We reserve the right to modify our products without any notifications.

HM 150.10 *Visualisation of Streamlines*

*** Visualisation of streamlines**

*** Ink as a contrast medium**

*** Various models included: drag bodies and changes in cross-section**

*** Sources and sinks, individually or in combination**

Learning Objectives / Experiments

- visualisation of streamlines in
  * flow around drag bodies
  * flow through changes in cross-section
- influence of sources and sinks

Technical Description

The laminar, two-dimensional flow in HM 150.10 is a good approximation of the flow of ideal fluids: the potential flow.

HM 150.10 can be used to visualise streamline fields for flows around drag bodies and flow through changes in cross-section. The streamlines are displayed in colour by injecting a contrast medium (ink). Sources and sinks are generated via four water connections in the bottom plate. The streamlines can be clearly observed through the glass plate during flow around and flow through.

The water flow rate and the quantity of contrast medium injected can be adjusted by valves. The water connections are also activated by valves and can be combined as required. Individual models can be cut out of a rubber plate that is included.

The experimental unit is positioned easily and securely on the work surface of the HM 150 base module. The water is supplied by HM 150. Alternatively, the experimental unit can be operated by the laboratory supply.

The well-structured instructional material sets out the fundamentals and provides a step-by-step guide through the experiments.

HM 150.10 *Visualisation of Streamlines*

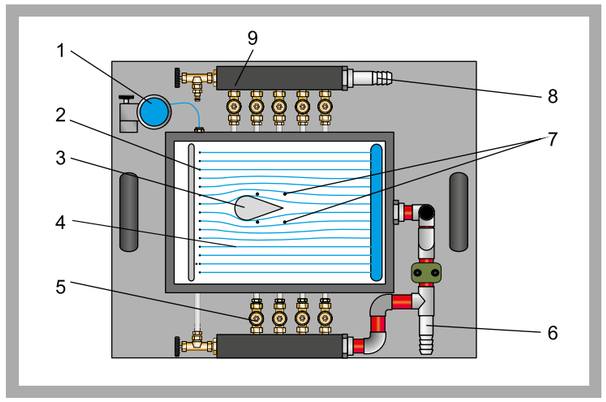

1 tank for contrast medium, 2 holes for injecting the contrast medium, 3 drag body, 4 experiment area, 5 valves for sinks, 6 water drain, 7 holes for sources and sinks, 8 water supply, 9 valves for sources

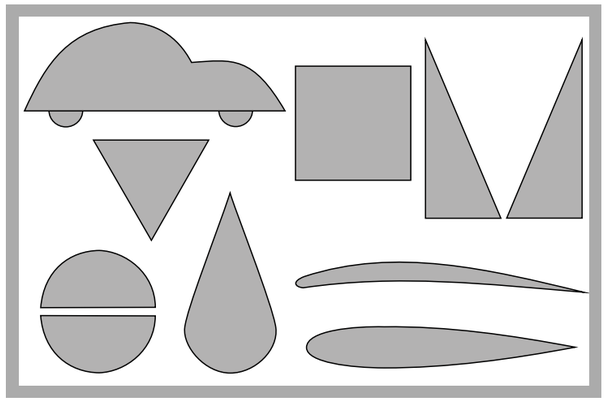

Included models
car, triangle, square, 2 triangles for change in cross-section, 2 semi-circles, droplet, streamlined body, guide vane profile

Specification

[1] visualisation of streamlines
[2] water as flowing medium and ink as contrast medium
[3] upper glass plate, hinged for interchanging models
[4] bottom plate with water connections for generating sources/sinks
[5] sources/sinks can be combined as required
[6] different drag bodies and changes in cross-section included
[7] rubber plate for creating your own models included
[8] flow velocity, water supply and water drain in sources/sinks as well as dosage of the contrast medium can be adjusted by using valves
[9] water supply using HM 150 base module or via laboratory supply

Technical Data

Flow chamber contains two plates
- distance between the plates: 2mm
- upper plate made of glass
- bottom glass plate with four water connections for sources/sinks
- size experiment area: LxW: 400x280mm

10 drag bodies and changes in cross-section
Rubber plate for your own models
- LxH: 300x400mm
- thickness: 2mm

Injection of the contrast medium (ink)
- 15 holes

Tank for contrast medium: 500mL

Dimensions and Weight

LxWxH: 640x520x520mm
Weight: approx. 24kg

Required for Operation

HM 150 (closed water circuit) or alternatively water connection and drain

Scope of Delivery

1 experimental unit
1 set of models
1 rubber plate
2x 30mL ink
1 set of water hoses
1 set of instructional material

Order Details

070.15010 HM 150.10 Visualisation of Streamlines

G.U.N.T Gerätebau GmbH, Hanskampring 15-17, D-22885 Barsbüttel, Phone +49 (40) 67 08 54-0, Fax +49 (40) 67 08 54-42, E-mail sales@gunt.de, Web http://www.gunt.de
We reserve the right to modify our products without any notifications.

HM 150.09 Horizontal Flow from a Tank

*** Visualisation of the trajectory of the outlet jet**

*** Study of openings with different diameters and contours**

*** Determination of the contraction coefficient**

Technical Description

Hydrodynamics considers the relationship between the trajectory, the outlet contour and the outlet velocity during flow from tanks. These considerations have practical applications in hydraulic engineering or in the design of bottom outlets in dams, for example.

HM 150.09 allows a user to study and visualise the profile of a water jet. Additionally, the contraction coefficient can be determined as a characteristic for different contours.

The experimental unit includes a transparent tank, a point gauge and a panel for visualising the jet paths. An interchangeable insert is installed in the tank's water outlet to facilitate the investigation of various openings. Four inserts with different diameters and contours are provided along with the unit.

To visualise the trajectory, the issued water jet is measured via a point gauge that consists of movable rods. The rods are positioned depending on the profile of the water jet. This results in a trajectory that is transferred to the panel.

The tank contains an adjustable overflow and a scale. In this way, a precise adjustment and accurate reading of the fill level are possible. The experimental unit is positioned easily and securely on the work surface of the HM 150 base module. The water is supplied and the flow rate measured by HM 150. Alternatively, the experimental unit can be operated by the laboratory supply.

The well-structured instructional material sets out the fundamentals and provides a step-by-step guide through the experiments.

Learning Objectives / Experiments

- recording the trajectory of the water jet at different outlet velocities
- study of how the level in the tank affects the outlet velocity
- determination of the contraction coefficient for different contours and diameters
- comparison of the actual and theoretical outlet velocity

HM 150.09 Horizontal Flow from a Tank

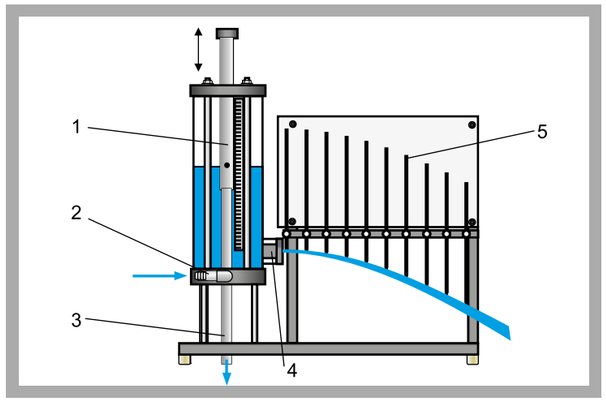

1 tank with adjustable overflow, 2 water supply, 3 water overflow, 4 water outlet, 5 point gauge for the water jet

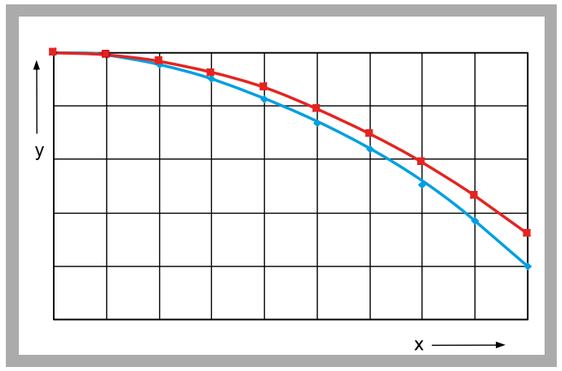

Measured and calculated (theoretical) trajectory of the outlet jet;
red: theoretical, blue: measured

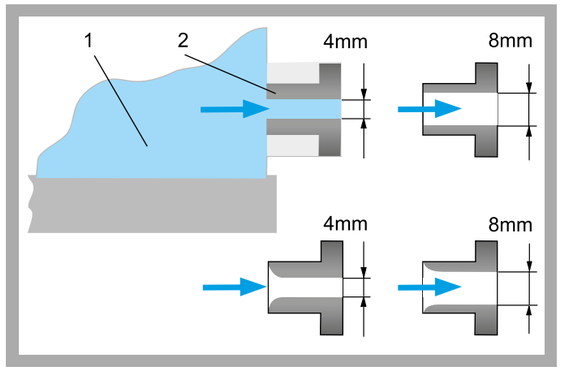

Interchangeable inserts to study different openings: 1 tank, 2 insert;
top: outlet from the tank through square contour,
bottom: outlet from the tank through rounded contour

Specification

[1] study of horizontal flows from tanks
[2] determining the contraction coefficient for different outlet contours and diameters
[3] tank with adjustable overflow and scale
[4] four interchangeable inserts with different diameters and contours
[5] point gauge with eight movable rods for visualisation of the jet path
[6] white panel for recording the trajectory
[7] flow rate determined by HM 150 base module
[8] water supply using HM 150 base module or via laboratory supply

Technical Data

Tank
- height: 510mm
- diameter: 190mm
- contents: approx. 13,5L

Inserts with rounded contour
- 1x diameter: 4mm
- 1x diameter: 8mm

Inserts with square contour
- 1x diameter: 4mm
- 1x diameter: 8mm

Point gauge, 8 movable rods
- length: 350mm

Dimensions and Weight

LxWxH: 865x640x590mm
Weight: approx. 27kg

Required for Operation

HM 150 (closed water circuit) or alternatively water connection and drain

Scope of Delivery

1 experimental unit
4 inserts
1 set of instructional material

Order Details

070.15009 HM 150.09 Horizontal Flow from a Tank

G.U.N.T Gerätebau GmbH, Hanskampring 15-17, D-22885 Barsbüttel, Phone +49 (40) 67 08 54-0, Fax +49 (40) 67 08 54-42, E-mail sales@gunt.de, Web http://www.gunt.de
We reserve the right to modify our products without any notifications.

HM 150.12 Vertical Flow from a Tank

*** Determination of the diameter and velocity of the outlet jet**

*** Study of openings with different inlet and outlet contours**

*** Determining the contraction coefficient**

Technical Description

Pressure losses in the flow from tanks are essentially the result of two processes: the jet deflection upon entry into the opening and the wall friction in the opening. As a result of the pressure losses the real discharge is smaller than the theoretical flow rate.

HM 150.12 determines these losses at different flow rates. Different diameters as well as inlet and outlet contours of the openings can be studied. Additionally, the contraction coefficient can be determined as a characteristic for different contours.

The experimental unit includes a transparent tank, a measuring device as well as a Pitot tube and twin tube manometers. An interchangeable insert is installed in the tank's water outlet to facilitate the investigation of various openings. Five inserts with different diameters, inlet contours and outlet contours are provided along with the unit.

The issued water jet is measured using a measuring device. A Pitot tube detects the total pressure of the flow. The pressure difference (read on the manometer) is used to determine the velocity.

The tank is fitted with an adjustable overflow and a measuring point for static pressure. In this way, the level can be precisely adjusted and read on the manometer. The experimental unit is positioned easily and securely on the work surface of the HM 150 base module. The water is supplied and the flow rate measured by HM 150. Alternatively, the experimental unit can be operated by the laboratory supply.

The well-structured instructional material sets out the fundamentals and provides a step-by-step guide through the experiments.

Learning Objectives / Experiments

- study of the outlet jet (diameter, velocity)
- determination of pressure losses and contraction coefficient for different outlet contours
- determination of flow rate at different discharge heads

HM 150.12 Vertical Flow from a Tank

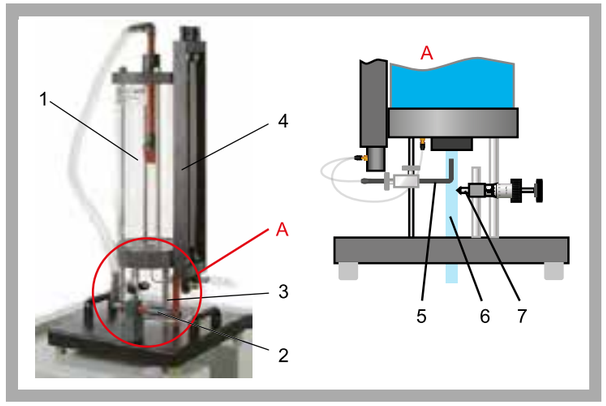

1 inlet strainer, 2 water connection, 3 overflow, 4 twin tube manometers, 5 Pitot tube, 6 water jet, 7 measuring device for jet diameter

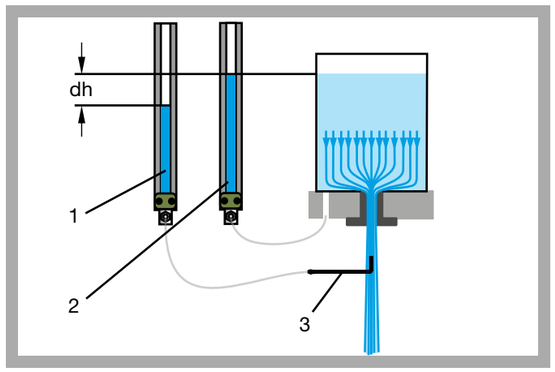

Measuring the pressures
1 total pressure in the free jet, 2 static pressure in the tank, 3 Pitot tube; dh loss due to conversion of pressure into velocity

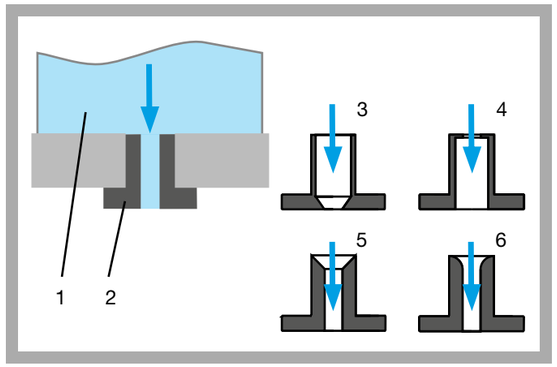

Interchangeable inserts to study different inlet and outlet contours
1 tank, 2 insert with cylindrical hole, 3 insert with conical outlet, 4 insert with orifice plate at the inlet, 5 insert with conical inlet, 6 insert with rounded inlet

Specification

[1] study of pressure losses in vertical flows from tanks
[2] determining the contraction coefficient for different contours and diameters
[3] tank with adjustable overflow
[4] 5 interchangeable inserts with different contours
[5] measuring device for determining the jet diameter
[6] Pitot tube for determining the total pressure
[7] pressure display on twin tube manometers
[8] flow rate determined by HM 150 base module
[9] water supply using HM 150 base module or via laboratory supply

Technical Data

Tank
- capacity: approx. 13L
- overflow height: max. 400mm
- max. flow rate: 14L/min

Inserts
Inside diameters: d_1=inlet, d_2=outlet
- 1x cylindrical hole, d=12mm
- 1x outlet from the insert: cone d_1=24mm, d_2=12mm
- 1x inlet to the insert: orifice plate d_1=24mm, d_2=12mm
- 1x inlet to the insert: cone d_1=30mm, d_2=12mm
- 1x inlet to the insert: rounded, d=12mm

Measuring ranges
- pressure: 500mmWC
- jet radius: 0...10mm

Dimensions and Weight

LxWxH: 400x400x830mm
Weight: approx. 18kg

Required for Operation

HM 150 (closed water circuit) or alternatively water connection and drain

Scope of Delivery

1 experimental unit
5 inserts
1 set of hoses
1 set of instructional material

Order Details

070.15012 HM 150.12 Vertical Flow from a Tank

G.U.N.T Gerätebau GmbH, Hanskampring 15-17, D-22885 Barsbüttel, Phone +49 (40) 67 08 54-0, Fax +49 (40) 67 08 54-42, E-mail sales@gunt.de, Web http://www.gunt.de
We reserve the right to modify our products without any notifications.

STEADY FLOW OF INCOMPRESSIBLE FLUIDS

Fluid

Fluid mechanics is concerned with the study of forces and movements of liquids and gases. Both substances are continua whose elements can easily move against each other. They are grouped together under the term 'fluid'.

Incompressible flow

Liquids are incompressible. In technical fields of application of fluid mechanics, **incompressibility** is also assumed for gases as long as the flow velocity remains below Mach 0,3. Based on air at 20°C this limiting value corresponds to a velocity of approximately 100 m/s and the change in density is roughly 4 %. It is therefore broadly possible to treat liquid and gas flows with common fundamental principles in fluid mechanics.

Steady and transient flow

Steady flow: the velocity of a fluid particle changes with the position: $v = f(s)$.

Transient flow: the velocity of a fluid particle changes with the time and the position: $v = f(s,t)$.

Transient flows occur during discharge processes, during startup and shutdown processes of turbomachines or in the case of fluid oscillations and water hammer processes.

LEARNING OBJECTIVES

FLOW IN PIPE SYSTEMS

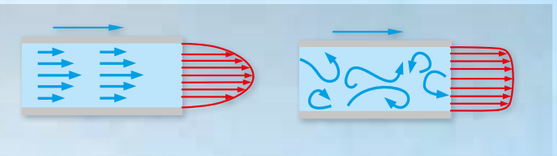

Velocity profile in fully developed flow
- laminar (left)
- turbulent (right)

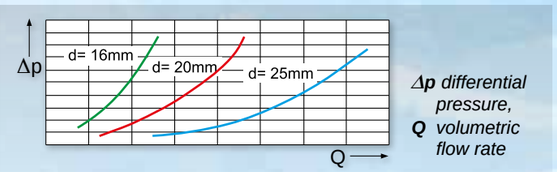

Δp differential pressure,
Q volumetric flow rate

Pressure losses in straight pipes

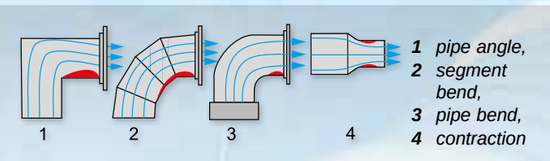

1 pipe angle,
2 segment bend,
3 pipe bend,
4 contraction

Pressure losses in pipe fittings
- enlargement/constriction/change of direction
- pipe bends
- segment bends/pipe angles

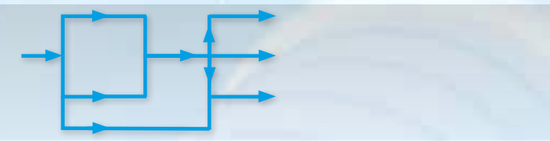

Losses in single-strand and multi-strand pipe systems

Δp differential pressure

Flow rate metrology: representation of the common industry measuring methods

LEARNING OBJECTIVES

CAVITATION

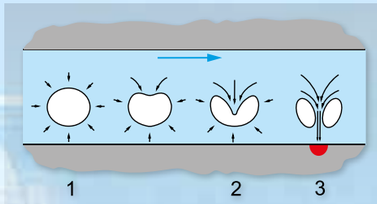

1 formation of the vapour bubble,
2 collapse of the vapour bubble,
3 jet of water hits the surface and leads to material destruction

Cavitation effects in industrial piping systems: formation and consequences

DISCHARGE PROCESSES

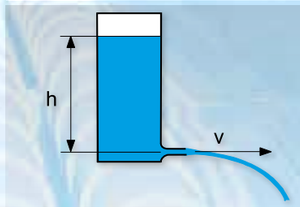

h head,
v velocity

Flows from tanks
- how the discharge cross-section and the shape affect the jet cross-section
- vertical discharge / horizontal discharge

FLOW IN VALVES

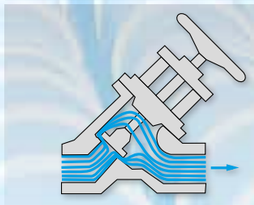

Special emphasis on technical issues
- constructions
- valve characteristics
- K values

OPEN-CHANNEL FLOW

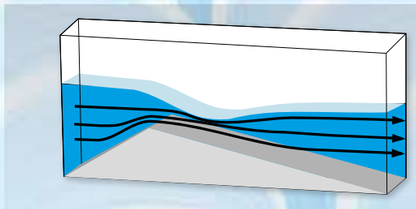

- subcritical and supercritical flow
- control structures
- discharge measurement

This topic is covered extensively in a separate chapter.

For the field of **Steady Flow of Incompressible Fluids** we have tried to capture the many learning objectives found in the literature around the world within the list of learning objectives defined above. Of course, variations in some sub-fields are possible. For example, we could argue whether or not **industrial flow rate metrology** should be covered here.

GUNT provides a programme that allows to work through all of the items listed in the learning objectives in educational laboratory experiments.

HM 150.01 Pipe Friction for Laminar / Turbulent Flow

*** Pipe friction losses in laminar and turbulent flow**

*** Determining the critical Reynolds number**

Technical Description

During flow through pipes, pressure losses occur due to internal friction and friction between the fluid and the wall. When calculating pressure losses, we need to know the friction factor, a dimensionless number. The friction factor is determined with the aid of the Reynolds number, which describes the ratio of inertia forces to friction forces.

HM 150.01 enables the study of the relationship between pressure loss due to fluid friction and velocity in the pipe flow. Additionally, the pipe friction factor is determined.

The experimental unit includes a small diameter pipe section in which the laminar and turbulent flow is generated. The Reynolds number and the pipe friction factor are determined from the flow rate and pressure loss. In turbulent flow, the pipe is supplied directly from the water supply. The constant pressure at the water supply required for laminar flow is provided by a standpipe on the overflow. Valves can be used to adjust the flow rate.

The pressures in laminar flow are measured with twin tube manometers. In turbulent flow, the pressure is read on a dial-gauge manometer.

The experimental unit is positioned easily and securely on the work surface of the HM 150 base module. The water is supplied and the flow rate measured by HM 150. Alternatively, the experimental unit can be operated by the laboratory supply.

The well-structured instructional material sets out the fundamentals and provides a step-by-step guide through the experiments.

Learning Objectives / Experiments

- measurements of the pressure loss in laminar flow
- measurements of the pressure loss in turbulent flow
- determining the critical Reynolds number
- determining the pipe friction factor
- comparing the actual pipe friction factor with the theoretical friction factor

HM 150.01 Pipe Friction for Laminar / Turbulent Flow

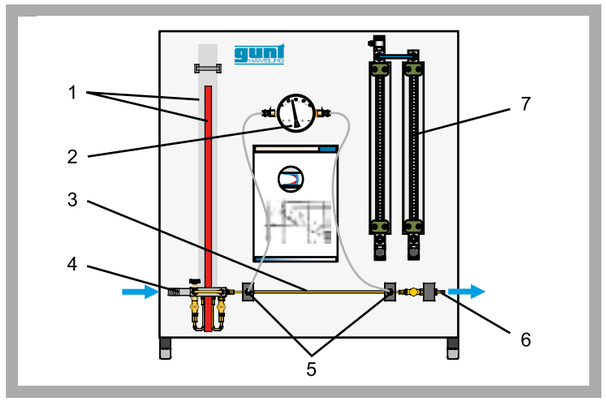

1 tank with overflow, 2 dial-gauge manometer, 3 pipe section, 4 water supply, 5 pressure measuring points, 6 water drain, 7 twin tube manometers

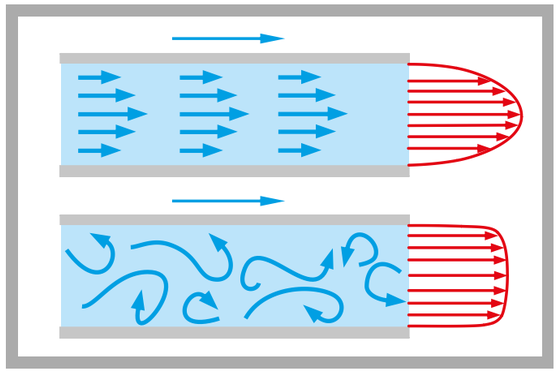

Representation of the laminar and turbulent flow in the pipe
top: laminar flow; bottom: turbulent flow; blue flow, red velocity profile

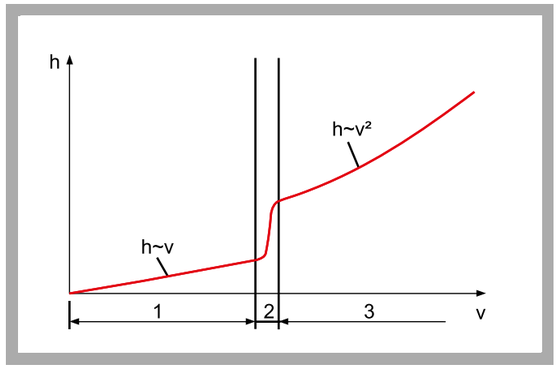

Pressure losses as a function of velocity in pipe flow
1 laminar flow, 2 transition from laminar to turbulent, 3 turbulent flow;
h pressure loss, v velocity

Specification

[1] investigation of the pipe friction in laminar or turbulent flow
[2] transparent tank with overflow ensures constant water inlet pressure in the pipe section for experiments with laminar flow
[3] water supply via HM 150 or via laboratory supply for experiments with turbulent flow
[4] flow rate adjustment via valves
[5] twin tube manometers for measurements in laminar flow
[6] dial-gauge manometer for measurements in turbulent flow
[7] flow rate determined by HM 150 base module
[8] water supply using HM 150 base module or via laboratory supply

Technical Data

Pipe section
- length: 400mm
- inside diameter: 3mm

Tank: 5L

Measuring ranges
- differential pressure (twin tube manometers): 2x 370mmWC
- differential pressure (dial-gauge manometer): 0...0,4bar

Dimensions and Weight

LxWxH: 850x680x930mm
Weight: approx. 23kg

Required for Operation

HM 150 (closed water circuit) or water supply, drain

Scope of Delivery

1 experimental unit
1 set of instructional material

Order Details

070.15001 HM 150.01 Pipe Friction for Laminar / Turbulent Flow

G.U.N.T Gerätebau GmbH, Hanskampring 15-17, D-22885 Barsbüttel, Phone +49 (40) 67 08 54-0, Fax +49 (40) 67 08 54-42, E-mail sales@gunt.de, Web http://www.gunt.de
We reserve the right to modify our products without any notifications.

HM 150.11 *Losses in a Pipe System*

*** Pressure losses in the piping system**

*** Pressure measurement without interaction via annular chambers**

*** Transparent measuring objects for determining flow rate**

Technical Description

Pressure losses occur during the flow of real fluids due to friction and turbulence (vortices). Pressure losses in pipes, piping elements, fittings and measuring instruments (e.g. flow meter, velocity meter) cause pressure losses and must therefore be taken into account when designing piping systems.

HM 150.11 allows to study the pressure losses in pipes, piping elements and shut-off devices. In addition, the differential pressure method is presented for measuring the flow rate.

The experimental unit contains six different pipe sections capable of being shut off individually. The pipe sections are equipped with piping elements such as bends, elbows and branches. In one pipe section, different shut-off devices and measuring objects are installed to determine the flow rate. The measuring objects are made of transparent material and provide excellent insight into the inner structure. The pressure measuring points in the piping system are designed as annular chambers. This creates a largely interference-free pressure measurement.

The experiments measure the pressure losses in pipes and piping elements, such as branches and bends. The opening characteristic of the shut-off devices are also recorded. The pressures are measured with tube manometers.

The experimental unit is positioned easily and securely on the work surface of the HM 150 base module. The water is supplied and the flow rate measured by HM 150. Alternatively, the experimental unit can be operated by the laboratory supply.

The well-structured instructional material sets out the fundamentals and provides a step-by-step guide through the experiments.

Learning Objectives / Experiments

- pressure losses in pipes, piping elements and fittings
- how the flow velocity affects the pressure loss
- determining resistance coefficients
- opening characteristics of angle seat valve and gate valve
- familiarisation with various measuring objects for determining flow rate:
  * Venturi nozzle
  * orifice plate flow meter and measuring nozzle

HM 150.11 *Losses in a Pipe System*

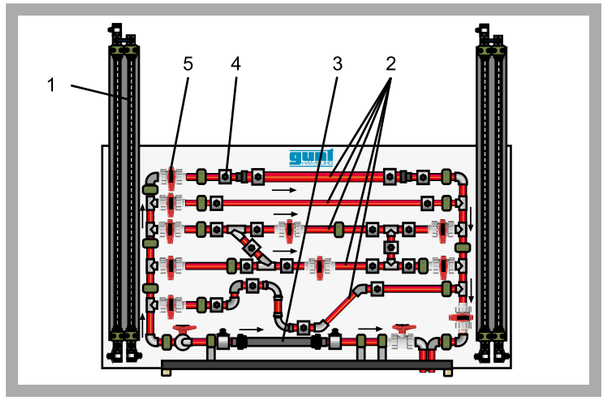

1 tube manometers, 2 various pipe sections, 3 pipe section for interchangeable shut-off/measuring objects, 4 annular chamber, 5 ball valve

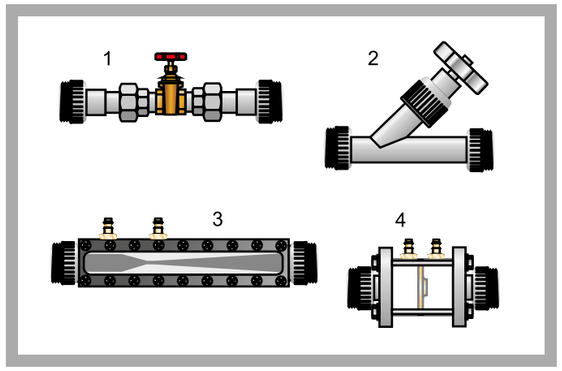

Shut-off devices and measuring objects for determining flow rate
1 gate valve, 2 angle seat valve, 3 Venturi nozzle, 4 orifice plate flow meter or measuring nozzle

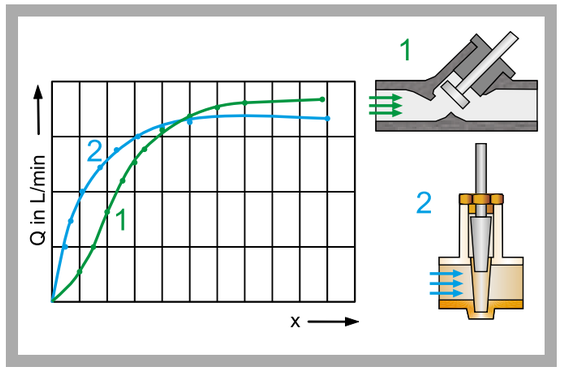

Opening characteristics of shut-off devices; Q flow rate, x opening, blue: angle seat valve, green: gate valve;
1 angle seat valve, 2 gate valve

Specification

[1] investigation of pressure losses in piping elements and shut-off devices
[2] different measuring objects for determining flow rate according to the differential pressure method
[3] six pipe sections capable of being individually shut off, with different piping elements: sudden contraction, sudden enlargement, Y-pieces, T-pieces, corners and bends
[4] one pipe section to hold interchangeable shut-off/measuring objects
[5] measuring objects made of transparent material: Venturi nozzle, orifice plate flow meter and measuring nozzle
[6] shut-off devices: angle seat valve, gate valve
[7] annular chambers allow measurement of pressure without interaction
[8] 2 twin tube manometers for measuring the pressure difference
[9] flow rate determined by HM 150 base module
[10] water supply using HM 150 base module or via laboratory supply

Technical Data

Pipe section to hold fittings or measuring objects
- 20x1,5mm, PVC

Pipe sections
Inside diameter: d
- straight: d=20x1,5mm, length: 800mm, PVC
- sudden contraction: d=32x1,8-20x1,5mm, PVC
- sudden enlargement: d=20x1,5-32x1,8mm, PVC
- with 2x Y-piece 45° and 2x T-piece
- with 2x 90° elbow/bend: d=20x1,5mm, PVC and 2x 45° elbow: d=20x1,5mm, PVC

2x twin tube manometers: 0...1000mmWC

Measuring range
- pressure: 0...0,1bar

Dimensions and Weight

LxWxH: 1550x640x1300mm
Weight: approx. 58kg

Required for Operation

HM 150 (closed water circuit) or water connection and drain

Scope of Delivery

1 experimental unit
2 shut-off devices (angle seat valve, gate valve)
1 Venturi nozzle, 1 orifice plate flow meter or measuring nozzle
1 set of hoses
1 set of tools
1 set of instructional material

Order Details

070.15011 HM 150.11 Losses in a Pipe System

G.U.N.T Gerätebau GmbH, Hanskampring 15-17, D-22885 Barsbüttel, Phone +49 (40) 67 08 54-0, Fax +49 (40) 67 08 54-42, E-mail sales@gunt.de, Web http://www.gunt.de
We reserve the right to modify our products without any notifications.

HM 164 Open Channel and Closed Channel Flow

*** Flow processes in the open channel: gate, sill and various weirs**

*** Flow processes in the closed channel: pipe flow**

*** Closed water circuit with tank and pump**

Technical Description

HM 164 is used to demonstrate different flow processes at different control structures in the open channel. In the closed channel, pressure components in a pipe are determined.

The trainer includes a transparent experimental flume with upper limit, a height-adjustable sill and a closed water circuit. The water level in the experimental section is set with an adjustable plate weir at the water outlet. With a simple alteration, the experimental flume can be used as an open or closed channel.

The water level must be low when investigating the open-channel flow. To conduct the experiment, a weir is attached to the bottom of the channel or the height-adjustable sill is used. Furthermore, the discharge under a gate can also be demonstrated. Various weirs, which can be exchanged quickly and safely, are available as control structures.

When studying the closed channel, the water level needs to be high enough that the entire experimental section is flowed through. In this case the sill is used to change the cross-section flowed through.

The static pressures and the total pressure over the cross-section are detected by measuring tubes. The pressure difference is used to calculate the flow velocity.

The well-structured instructional material sets out the fundamentals and provides a step-by-step guide through the experiments.

Learning Objectives / Experiments

Open channel
- flow over control structures: broad-crested weir, narrow-crested weir, ogee-crested weir with ski jump spillway, sill
- discharge under a gate
- hydraulic jump

Closed channel
- pipe flow with constant and variable flow cross-section
- measurement of static pressure and total pressure
- calculation of the flow velocity

HM 164 Open Channel and Closed Channel Flow

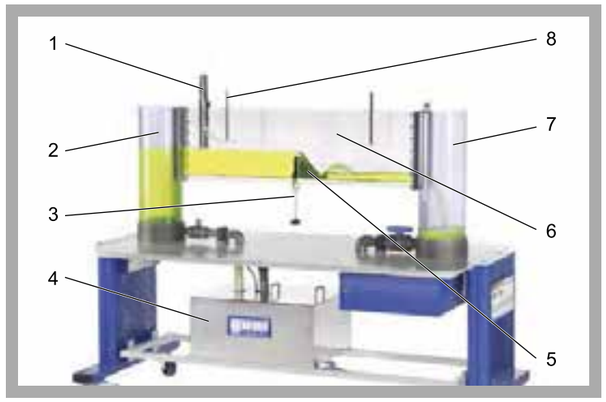

1 sluice gate, 2 water supply, 3 sill height adjustment, 4 supply tank, 5 ogee-crested weir used in the experimental flume, 6 upper limit, 7 water drain with plate weir at the water outlet, 8 measuring tube

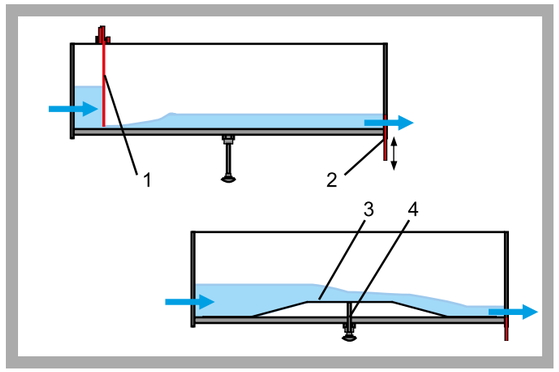

Flow processes in the open channel; 1 flow under a gate, 2 plate weir at the water outlet, 3 flow over a sill, 4 height adjustment of the sill

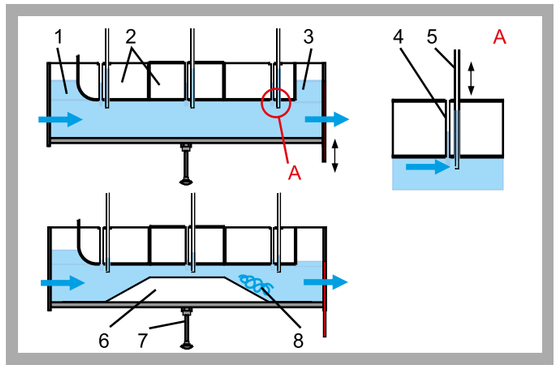

Flow processes in the closed channel; 1 inlet, 2 upper limit, 3 outlet, 4 static pressure measurement, 5 total pressure measurement, 6 sill, 7 height adjustment of the sill, 8 turbulence

Specification

[1] investigation of flow processes in the open and closed channel
[2] experimental flume with upper limit, made of transparent material
[3] height-adjustable sill in the bottom of the experimental flume
[4] water level adjustable via plate weir at the water outlet
[5] simple conversion from open to closed channel
[6] control structures for experiments in the open channel: broad-crested weir, narrow-crested weir, ogee-crested weir with ski jump spillway, sill, gate
[7] fully flowed through experimental section and change in cross-section over sill for experiments in the closed channel
[8] closed water circuit with supply tank and pump
[9] transparent measuring tubes for measuring static pressure and total pressure

Technical Data

Experimental section
- length: 1,1m
- cross-section WxH: 40x300mm

Supply tank: 70L
Pump
- power consumption: 250W
- max. flow rate: 150L/min
- max. head: 7,6m

Dimensions and Weight

LxWxH: 1900x800x1350mm
Weight empty: approx. 150kg

Required for Operation

230V, 50/60Hz, 1 phase or 120V, 60Hz/CSA, 1 phase

Scope of Delivery

1 trainer
control structures: broad-crested weir, narrow-crested weir, ogee-crested weir with ski jump spillway, sill, gate
1 plate weir
1 tool
1 set of instructional material

Order Details

070.16400 HM 164 Open Channel and Closed Channel Flow

G.U.N.T Gerätebau GmbH, Hanskampring 15-17, D-22885 Barsbüttel, Phone +49 (40) 67 08 54-0, Fax +49 (40) 67 08 54-42, E-mail sales@gunt.de, Web http://www.gunt.de
We reserve the right to modify our products without any notifications.

HM 111 Pipe Networks

*** Structure of various pipe networks**

*** Pressure losses at various piping elements and pipe networks**

*** Closed water circuit with tank and pump**

Technical Description

An important task in the construction of pipelines is to determine the pressure and flow rate in complex piping systems. In practice, the calculation of the total pressure losses serves as a foundation for the design of suitable drive units for heating and air conditioning systems, drinking water supply systems and parts of wastewater systems. Knowledge of pressure losses is also used to optimise operation.

HM 111 enables the construction and investigation of various pipe networks, such as parallel and series connections of pipes, their branching and merging, and the study of individual pipes. In analogy to Kirchhoff's laws of electricity, it is possible to conduct nodal analysis.

The five pre-installed pipe sections on the top of the trainer are connected to pipe networks using the piping elements. Tank, pipes, piping elements and valves and fittings are made entirely of plastic. The individual pipe sections are shut off by ball valves. During the experiments, the pressure losses in various pipes and piping elements are recorded and evaluated.

Two manometers for different measuring ranges are included to measure differential pressure. The flow rate is measured volumetrically.

The trainer has its own water supply. The closed water circuit includes a supply tank with submersible pump.

The well-structured instructional material sets out the fundamentals and provides a step-by-step guide through the experiments.

Learning Objectives / Experiments

- recording the calibration curve for pipe sections: pressure loss over flow rate
- pipe sections connected in parallel
- pipe sections connected in series
- combined series and parallel connection
- investigation of a closed circular pipeline
- differential pressure measurement
- pressure losses at various piping elements

HM 111 Pipe Networks

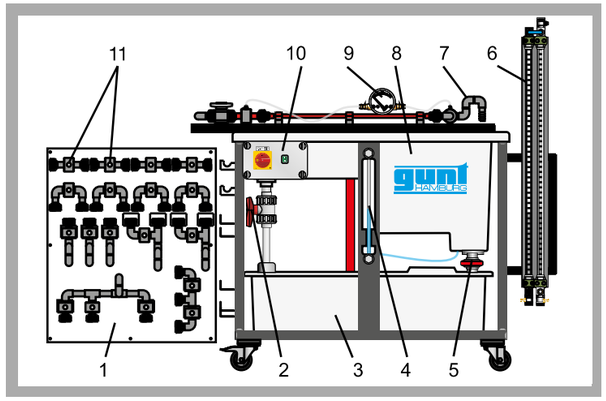

1 panel with piping elements, 2 valve for adjusting the flow rate, 3 supply tank with submersible pump, 4 measuring tank level indicator, 5 gate valve for emptying the measuring tank, 6 twin tube manometers, 7 pipe sections, 8 measuring tank, 9 differential pressure manometer, 10 switch box, 11 pressure measuring point

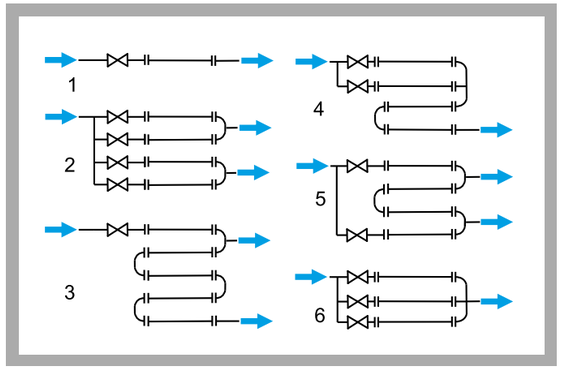

Different pipe networks constructed from pipe sections:
1 calibration of pipe sections, 2 doubling, 3 series connection, 4 parallel and series connection, 5 closed circular pipeline, 6 parallel connection

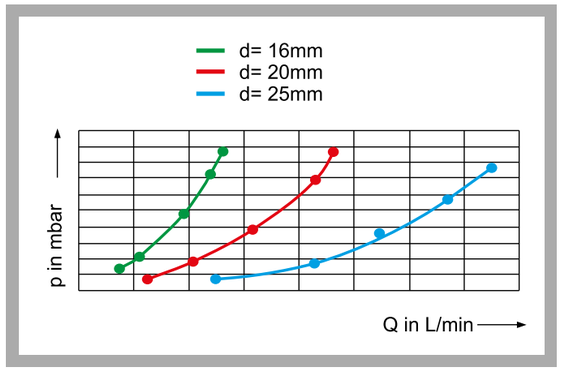

The diagram shows the pressure loss over flow rate for different pipe diameters:
p pressure, Q flow rate, d inner diameter

Specification

[1] investigation of different pipe networks
[2] five pre-installed pipe sections with different diameters
[3] panel for piping elements
[4] construction of pipe networks from pipe sections and various piping elements
[5] calibration of pipe sections
[6] parallel and series connection of pipe sections
[7] construction of a closed circular pipeline
[8] differential pressure measurement with twin tube manometers and differential pressure manometer
[9] flow rate measurement with measuring tank (can be shut off), stopwatch and level indicator

Technical Data

Pump
- power consumption: 250W
- max. flow rate: 9m³/h
- max. head: 7,6m

Pipe network, max. flow rate: 4,8m³/h
Pipe sections, length 700mm each
- 1x: 25x1,9mm
- 2x: 20x1,5mm
- 2x: 16x1,2mm

Twin tube manometers
Tank for water: 180L
Tank for flow rate measurement
- small measuring range: 10L
- large measuring range: 60L

Stopwatch: 1/100s

Measuring ranges
- differential pressure: 1x 0...1bar
- differential pressure with tube manometers: 2x 0...100mbar

Dimensions and Weight

LxWxH: 1550x800x1600mm
Weight: approx. 117kg

Required for Operation

230V, 50/60Hz, 1 phase or 120V, 60Hz/CSA, 1 phase

Scope of Delivery

1 trainer
1 stopwatch
1 set of instructional material

Order Details

070.11100 HM 111 Pipe Networks

G.U.N.T Gerätebau GmbH, Hanskampring 15-17, D-22885 Barsbüttel, Phone +49 (40) 67 08 54-0, Fax +49 (40) 67 08 54-42, E-mail sales@gunt.de, Web http://www.gunt.de
We reserve the right to modify our products without any notifications.

EXPERIMENTAL UNITS FROM THE FIELD OF TURBO MACHINERY

One important field of fluid mechanics concerns turbomachines, these are divided into power engines and machines. Turbines are power machines, while pumps are classic machines.

The experimental units presented here are all powered by water. They serve as an introduction into the subject of turbomachinery.

The experimental units are part of the HM 150 series. The water is supplied and the flow rate measured by the HM 150 base module.

POWER ENGINES

HM 150.19 OPERATING PRINCIPLE OF A PELTON TURBINE

- model of an impulse turbine
- transparent front panel for observing the operating area
- adjustable nozzle needle for setting different nozzle cross-sections

HM 150.20 OPERATING PRINCIPLE OF A FRANCIS TURBINE

- model of a reaction turbine
- transparent front panel for observing the operating area
- adjustable guide vanes for setting different angles of incidence

MACHINES

HM 150.04 CENTRIFUGAL PUMP

- studying a centrifugal pump and recording a typical pump characteristic curve
- determining the pump efficiency
- studying how speed affects flow rate and head

HM 150.16 SERIES AND PARALLEL CONFIGURATION OF PUMPS

- studying pumps individually, connected in series and in parallel
- recording pump characteristic curves and determining the operating point
- determining the hydraulic power of pumps

HM 150.19 Operating Principle of a Pelton Turbine

*** Model of an impulse turbine**
*** Transparent operating area**
*** Adjustable nozzle cross-section**
*** Loading by band brake**

Technical Description

Water turbines are turbomachines utilising water power. The Pelton turbine is a type of impulse turbine; such turbines convert the pressure energy of water into kinetic energy entirely in the distributor. During the conversion, the water jet is accelerated in a nozzle and directed onto the blades of the Pelton wheel tangentially. The water jet is redirected by approximately 180° in the blades. The impulse of the water jet is transmitted to the Pelton wheel.

HM 150.19 is a model of a Pelton turbine demonstrating the function of an impulse turbine.

The experimental unit consists of the Pelton wheel, a needle nozzle used as distributor, a band brake for loading the turbine and a housing with a transparent front panel. The transparent cover enables to observe the water flow, the Pelton wheel and the nozzle during operation. The nozzle cross-section and thus the flow rate are modified by adjusting the nozzle needle.

The turbine torque is determined by force measurement on a band brake and is read on spring balances. For measuring the rotational speed, a non-contact speed sensor, e.g. HM 082, is required. A manometer shows the water pressure at the turbine inlet.

The experimental unit is positioned easily and securely on the work surface of the HM 150 base module. The water is supplied and the flow rate measured by HM 150. Alternatively, the experimental unit can be operated by the laboratory supply.

The well-structured instructional material sets out the fundamentals and provides a step-by-step guide through the experiments.

Learning Objectives / Experiments

- design and function of a Pelton turbine
- determination of torque, power and efficiency
- graphical representation of characteristic curves for torque, power and efficiency

HM 150.19 Operating Principle of a Pelton Turbine

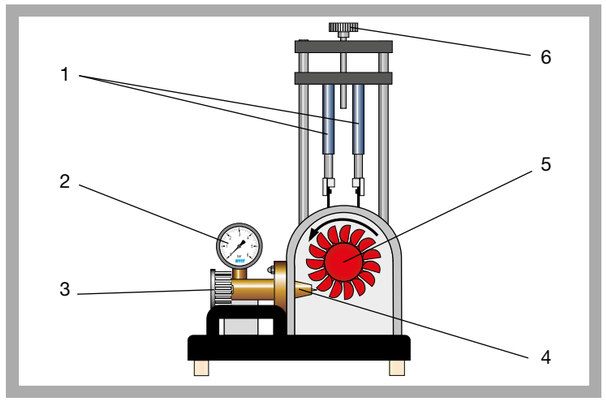

1 spring balance, 2 manometer, 3 adjustment of the nozzle cross-section, 4 needle nozzle, 5 Pelton wheel, 6 adjustment of the band brake

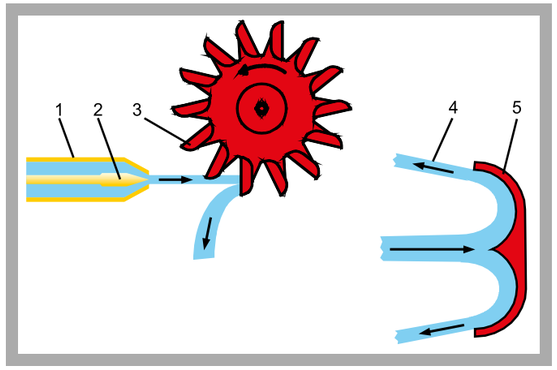

Operating principle of the Pelton turbine:
1 needle nozzle, 2 adjustable nozzle needle, 3 blade on the Pelton wheel, 4 redirected water jet, 5 profile of the blade

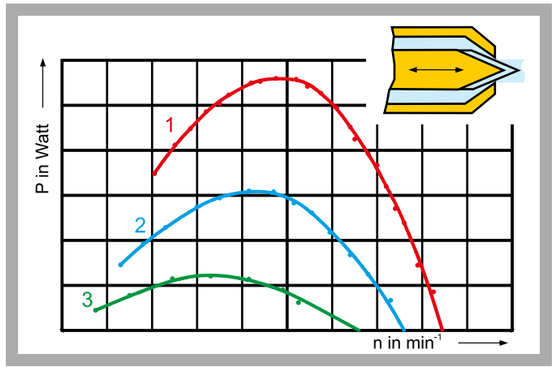

Turbine output curves at different positions of the nozzle needle:
1: Q=31,6L/min, 2: Q=18,8L/min, 3: Q=11,5L/min; n speed, P turbine output

Specification

[1] function of a Pelton turbine
[2] transparent front panel for observing the operating area
[3] loading the turbine by use of the band brake
[4] adjustable nozzle needle for setting different nozzle cross-sections
[5] marking on brake drum for non-contact speed measurement
[6] instruments: spring balances for determining the torque, manometer shows pressure at turbine inlet
[7] flow rate determination by base module HM 150
[8] water supply using base module HM 150 or via laboratory supply

Technical Data

Pelton turbine
- output: 5W at 500min^{-1}, approx. 30L/min, H=2m
- Pelton wheel
  14 blades
  blade width: 33,5mm
  external diameter: 132mm

Needle nozzle
- jet diameter: 10mm

Measuring ranges
- braking force (spring balance): 10N
- pressure: 0...1bar

Dimensions and Weight

LxWxH: 400x400x620mm
Weight: approx. 15kg

Required for Operation

HM 150 (closed water circuit) or water supply, drain

Scope of Delivery

1 experimental unit
1 set of instructional material

Order Details

070.15019 HM 150.19 Operating Principle of a Pelton Turbine

2E a division of G.U.N.T Gerätebau GmbH, P.O.Box 1125, D-22885 Barsbüttel, t +49 (40)67 08 54-0, f +49 (40)67 08 54-42, E-mail sales@gunt.de
We reserve the right to modify our products without any notifications. Visit our Websites: www.gunt.de | www.gunt2e.de

HM 150.20 Operating Principle of a Francis Turbine

*** Model of a reaction turbine**
*** Transparent operating area**
*** Turbine with adjustable guide vanes**
*** Loading by band brake**

Technical Description

Water turbines are turbomachines utilising water power. The Francis turbine is a type of reaction turbine which converts the pressure energy of the water into kinetic energy in the distributor and in the rotor. The water is fed in the distributor by means of a spiral housing. The flowing water is accelerated in the distributor by the adjustable guide vanes and directed onto the rotor blades. The redirection and further acceleration of the water in the rotor generates an impulse which is transmitted to the rotor.

HM 150.20 is the model of a Francis turbine demonstrating the function of a reaction turbine.

The experimental unit consists of the rotor, the distributor with adjustable guide vanes, a band brake for loading the turbine and a housing with a transparent front panel. The transparent cover enables to observe the water flow, the rotor and the guide vanes during operation. The angle of attack and thus the power of the rotor are modified by adjusting the guide vanes.

The turbine torque is determined by force measurement on a band brake and is read on spring balances. For measuring the rotational speed, a non-contact speed sensor, e.g. HM 082, is required. A manometer shows the water pressure at the turbine inlet.

The experimental unit is positioned easily and securely on the work surface of the HM 150 base module. The water is supplied and the flow rate measured by HM 150. Alternatively, the experimental unit can be operated by the laboratory supply.

The well-structured instructional material sets out the fundamentals and provides a step-by-step guide through the experiments.

Learning Objectives / Experiments

- design and function of a Francis turbine
- determination of torque, power and efficiency
- graphical representation of characteristic curves for torque, power and efficiency

HM 150.20 Operating Principle of a Francis Turbine

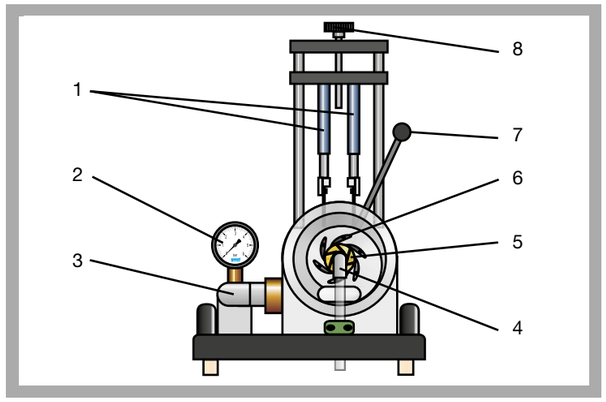

1 spring balance, 2 manometer, 3 water inlet, 4 water outlet, 5 rotor, 6 guide vanes, 7 adjustment of the guide vanes, 8 adjustment of the band brake

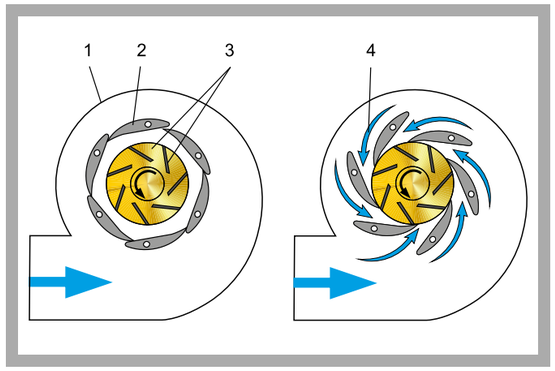

Operating principle of the Francis turbine:
1 spiral housing, 2 guide vane, 3 rotor with rotor blades, 4 flow
on the left: guide vane position closed, Q=0, P=0
on the right: guide vane position open, Q=max., P=max.

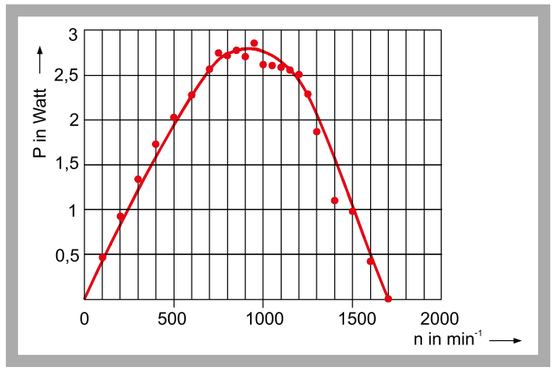

Characteristic curve for power output on the turbine shaft;
P turbine power output, n speed

Specification

[1] function of a Francis turbine
[2] transparent front panel for observing the operating area
[3] loading the turbine by use of the band brake
[4] adjustable guide vanes for setting different angles of attack
[5] marking on brake drum for non-contact speed measurement
[6] instruments: spring balances for determining the torque, manometer shows pressure at turbine inlet
[7] flow determination by base module HM 150
[8] water supply using the base module HM 150 or via lab supply

Technical Data

Turbine
- output: 12W at n=1100min^{-1}, approx. 40L/min, H=8m
- rotor, 7 blades
  blade width: 5mm
  external diameter: 50mm
- guide vanes: 6 vanes, adjustable (20 stages)

Measuring ranges
- braking force (spring balance): 10N
- pressure: 0...1,0bar

Dimensions and Weight

LxWxH: 400x400x630mm
Weight: approx. 17kg

Required for Operation

HM 150 (closed water circuit) or water supply, drain

Scope of Delivery

1 experimental unit
1 set of instructional material

Order Details

070.15020 HM 150.20 Operating Principle of a Francis Turbine

2E a division of G.U.N.T Gerätebau GmbH, P.O.Box 1125, D-22885 Barsbüttel, t +49 (40)67 08 54-0, f +49 (40)67 08 54-42, E-mail sales@gunt.de
We reserve the right to modify our products without any notifications. Visit our Websites: www.gunt.de | www.gunt2e.de

HM 150.04 *Centrifugal Pump*

The illustration shows HM 150.04 together with HM 150.

*** Characteristic curve of a centrifugal pump**

*** Variable speed via frequency converter**

Technical Description

Centrifugal pumps are turbomachines that are used for conveying fluids. The HM 150.04 unit can be used to study a centrifugal pump and to record a typical pump characteristic curve.

The experimental unit includes a self-priming centrifugal pump, a ball valve on the outlet side and manometers on the inlet and outlet side. It is driven by an asynchronous motor. The speed is infinitely adjustable by using a frequency converter. A ball valve is used to adjust the head.

In experiments, the operating behaviour of the pump as a function of the flow rate is studied and displayed in characteristic curves. The motor's speed and electrical power are displayed digitally. Pressures on the inlet and outlet side are displayed on two manometers.

The experimental unit is positioned easily and securely on the work surface of the HM 150 base module. The pump draws in water from the tank on the base module HM 150. The flow rate is determined volumetrically by flowing back into the measuring tank on HM 150.

The well-structured instructional material sets out the fundamentals and provides a step-by-step guide through the experiments.

Learning Objectives / Experiments

familiarisation with operating behaviour and characteristics of a centrifugal pump through experiments

- recording the pump characteristic curve at a constant pump speed
  - * measuring the inlet and outlet pressure
  - * determining the flow rate
- recording the pump characteristics for different speeds
- power and efficiency curves
  - * measuring the electrical drive power
  - * determining the hydraulic power
  - * calculating the efficiency

HM 150.04 *Centrifugal Pump*

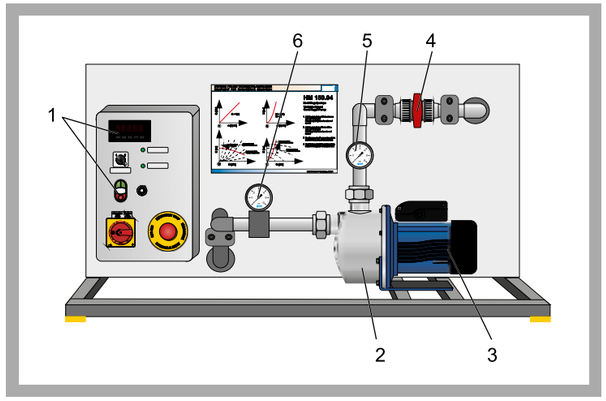

1 display and controls, 2 centrifugal pump, 3 motor, 4 ball valve for adjusting the head, 5 outlet side manometer, 6 inlet side manometer

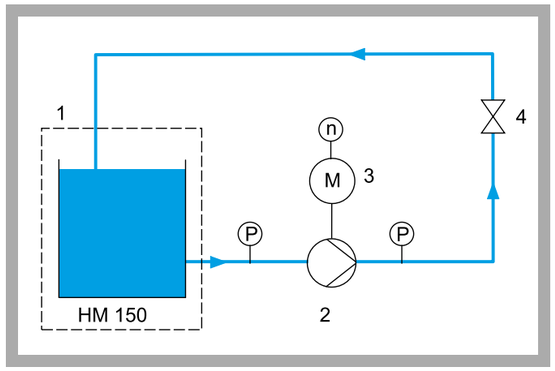

1 water supply via HM 150, 2 centrifugal pump, 3 motor, 4 ball valve for adjusting the head; P pressure, n speed

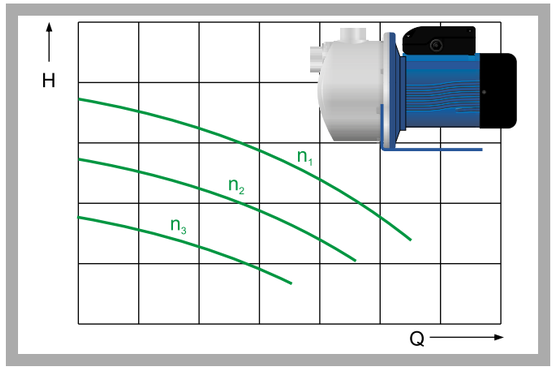

Pump characteristic curves at different speeds:
H head, Q flow rate, n speed

Specification

[1] investigation of a centrifugal pump
[2] drive with variable speed via frequency converter
[3] ball valve to adjust the head
[4] manometers on the inlet and outlet side of the pump
[5] digital display of speed and power
[6] flow rate determined by base module HM 150
[7] water supply using base module HM 150

Technical Data

Centrifugal pump, self-priming
- max. flow rate: 3000L/h
- max. head: 36,9m

Asynchronous motor
- nominal power: 370W

Measuring ranges
- pressure (outlet side): -1...5bar
- pressure (inlet side): -1...1,5bar
- speed: 0...3000min^{-1}
- power: 0...1000W

Dimensions and Weight

LxWxH: 1100x640x600mm
Weight: approx. 46kg

Required for Operation

230V, 50/60Hz/CSA, 1 phase or 230V, 60Hz/CSA, 3 phases
HM 150 (closed water circuit)

Scope of Delivery

1 experimental unit
1 set of instructional material

Order Details

070.15004 HM 150.04 Centrifugal Pump

G.U.N.T Gerätebau GmbH, Hanskampring 15-17, D-22885 Barsbüttel, Phone +49 (40) 67 08 54-0, Fax +49 (40) 67 08 54-42, E-mail sales@gunt.de, Web http://www.gunt.de
We reserve the right to modify our products without any notifications.

HM 150.16 Series and Parallel Configuration of Pumps

*** Series and parallel configuration of pumps**

*** Determining pump characteristic curves**

Technical Description

In complex systems, pumps can be connected in series or in parallel. In series operation the heads are added together and in parallel operation, the flow rates of the pumps are added. Series and parallel configuration of pumps behave similar to series and parallel configuration of electric resistances in electric circuits. The pump correlates with the electric resistance, the flow correlates with the electric current and the head with the voltage.

With HM 150.16 pumps are studied individually, in series and in parallel configuration.

The experimental unit contains two identical centrifugal pumps and an intake tank with overflow. The overflow ensures a constant suction head in the tank, regardless of the water supply. Ball valves in the pipes allow easy switching between series and parallel operation.

Pressures at inlet and outlet of the two pumps are displayed on manometers.

The experimental unit is positioned easily and securely on the work surface of the HM 150 base module. The water is supplied and the flow rate measured by HM 150. Alternatively, the experimental unit can be operated by the laboratory supply.

The well-structured instructional material sets out the fundamentals and provides a step-by-step guide through the experiments.

Learning Objectives / Experiments

Investigation of pumps in series and parallel configuration
- determining the head
- recording the pump characteristics
- determining the hydraulic power
- determining the operating point

HM 150.16 Series and Parallel Configuration of Pumps

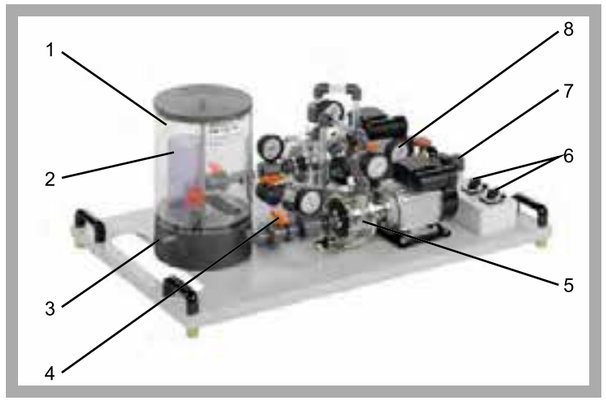

1 tank, 2 overflow, 3 water connection, 4 ball valve, 5 pump, 6 pump switch, 7 drain, 8 manometer

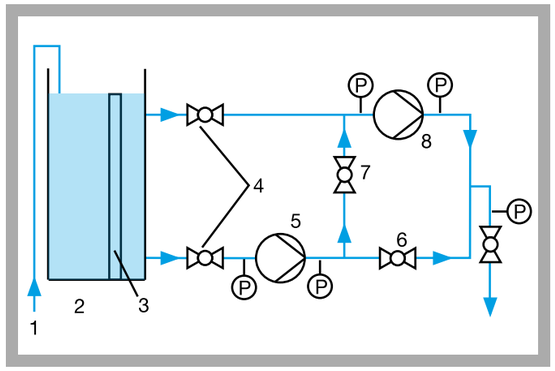

1 water connection, 2 tank, 3 overflow, 4 ball valve, 5 pump 1, 6 and 7 ball valves for switching the pumps between series and parallel operation, 8 pump 2; P pressure

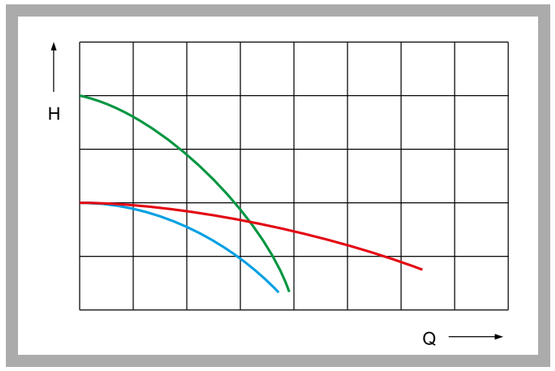

Characteristic curves: blue: one pump in operation, red: parallel configuration of pumps, green: series configuration of pumps; H head, Q flow rate

Specification

[1] investigation of series and parallel configuration of pumps
[2] two identical centrifugal pumps
[3] transparent tank as intake tank
[4] overflow in the tank ensures constant suction head
[5] ball valves used to switch between series and parallel operation
[6] manometers at inlet and outlet of each pump
[7] flow rate determined by base module HM 150
[8] water supply via HM 150 or via laboratory supply

Technical Data

2x centrifugal pump
- power consumption: 370W
- max. flow rate: 21L/min
- max. head: 12m

Tank: 13L
Pipes and pipe connections: PVC

Measuring ranges
- pressure (inlet): 2x -1...1,5bar
- pressure (outlet): 3x 0...2,5bar

Dimensions and Weight

LxWxH: 1110x650x500mm
Weight: approx. 62kg

Required for Operation

230V, 50/60Hz, 1 phase or 120V, 60Hz/CSA, 1 phase
HM 150 (closed water circuit) or alternatively water connection and drain

Scope of Delivery

1 experimental unit
1 set of instructional material

Order Details

070.15016 HM 150.16 Series and Parallel Configuration of Pumps

G.U.N.T Gerätebau GmbH, Hanskampring 15-17, D-22885 Barsbüttel, Phone +49 (40) 67 08 54-0, Fax +49 (40) 67 08 54-42, E-mail sales@gunt.de, Web http://www.gunt.de
We reserve the right to modify our products without any notifications.

HM 150 RANGE A SIMPLE INTRODUCTION INTO THE FUNDAMENTALS OF FLUID MECHANICS

GUNT devices from the HM 150 range demonstrate phenomena and facilitate simple experiments on the following topics of fluid mechanics:

- steady flow in pipes
- laminar/turbulent flow, Reynolds number
- continuity equation, Bernoulli's principle
- methods of flow rate measurement
- flow from tanks
- free/forced vortex formation
- open-channel flow
- flow around bodies
- transient flow at a hydraulic ram
- turbomachines
- jet forces

HM 150.18 Osborne Reynolds Experiment

HM 150.15 Hydraulic Ram – Pumping Using Water Hammer

HM 150.08 Measurement of Jet Forces

STEADY FLOW IN PIPES

HM 150.11 ***Losses in a Pipe System***
HM 150.01 ***Pipe Friction for Laminar / Turbulent Flow***
HM 150.29 ***Energy Losses in Piping Elements***

LAMINAR/TURBULENT FLOW, REYNOLDS NUMBER

HM 150.18 ***Osborne Reynolds Experiment***
HM 150.01 ***Pipe Friction for Laminar / Turbulent Flow***

BERNOULLI'S PRINCIPLE / FLOW RATE MEASUREMENT

HM 150.13 ***Methods of Flow Measurement***
HM 150.11 ***Losses in a Pipe System***
HM 150.07 ***Bernoulli's Principle***

TRANSIENT FLOW

HM 150.15 ***Hydraulic Ram – Pumping Using Water Hammer***

TURBOMACHINES

HM 150.04 ***Centrifugal Pump***
HM 150.16 ***Series and Parallel Configuration of Pumps***
HM 150.19 ***Operating Principle of a Pelton Turbine***
HM 150.20 ***Operating Principle of a Francis Turbine***

JET FORCES

HM 150.08 ***Measurement of Jet Forces***

DETERMINING THE METACENTRE

HM 150.06 ***Stability of Floating Bodies***

HM 150.11 Losses in a Pipe System

HM 150.13 Methods of Flow Measurement

HM 150.04 Centrifugal Pump

HM 150.06 Stability of Floating Bodies

HM 150.21 Visualisation of Streamlines in an Open Channel

STEADY OPEN-CHANNEL FLOW

HM 150.21 ***Visualisation of Streamlines in an Open Channel***
HM 150.03 ***Plate Weirs for HM 150***

The HM 150 base module provides a closed water circuit to supply the separate experimental units. The experimental unit is connected to the base module for the water supply via a hose. The flow rate is measured volumetrically.

All devices are designed so that they can be placed securely and stably on the base module.

FREE/FORCED VORTEX FORMATION

HM 150.14 ***Vortex Formation***

HM 150.10 Visualisation of Streamlines

FLOW AROUND BODIES

HM 150.10 ***Visualisation of Streamlines***
HM 150.21 ***Visualisation of Streamlines in an Open Channel***

HM 150.09 Horizontal Flow from a Tank

FLOW FROM TANKS

HM 150.09 ***Horizontal Flow from a Tank***
HM 150.12 ***Vertical Flow from a Tank***

HM 150.14 Vortex Formation

HM 150 Base Module for Experiments in Fluid Mechanics

*** Water supply for experimental units for fluid mechanics**

*** Volumetric flow rate measurement for large and small flow rates**

*** Comprehensive range of accessories allows a complete course in the fundamentals of fluid mechanics**

Technical Description

The HM 150 series of devices permits a varied experimental cross-section in the fundamentals of fluid mechanics. The base module HM 150 provides the basic equipment for individual experiments: the supply of water in the closed circuit; the determination of volumetric flow rate and the positioning of the experimental unit on the working surface of the base module and the collection of dripping water.

The closed water circuit consists of the underlying storage tank with a powerful submersible pump and the measuring tank arranged above, in which the returning water is collected.

The measuring tank is stepped, for larger and smaller volumetric flow rates. A measuring beaker is used for very small volumetric flow rates. The volumetric flow rates are measured using a stopwatch.

The top work surface enables the various experimental units to be easily and safely positioned. A small flume is integrated in the work surface, in which experiments with weirs (HM 150.03) are conducted.

HM 150 Base Module for Experiments in Fluid Mechanics

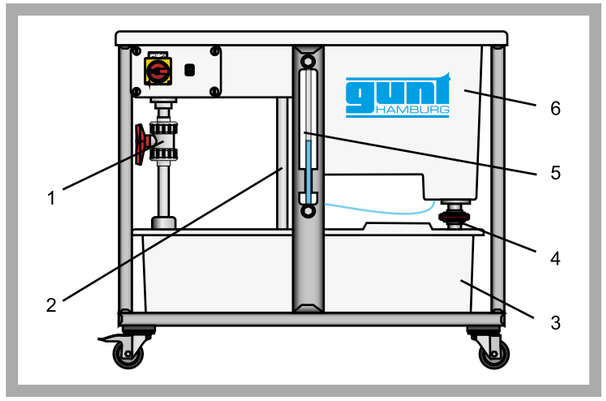

1 flow control valve, 2 overflow, 3 storage tank with submersible pump, 4 gate valve for emptying the measuring tank, 5 measuring tank level indicator, 6 measuring tank

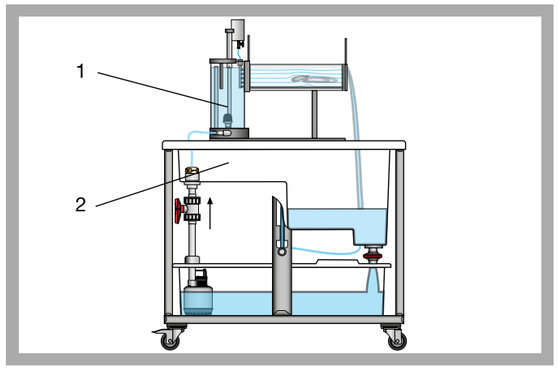

HM 150.21 (1) placed on the base module HM 150 (2)

Base module for experiments in fluid mechanics with plate weir HM 150.03

Specification

[1] base module for supplying experimental units in fluid mechanics
[2] closed water circuit with storage tank, submersible pump and measuring tank
[3] measuring tank divided in two for volumetric flow rate measurements
[4] measuring beaker with scale for very small volumetric flow rates
[5] measurement of volumetric flow rates by using a stopwatch
[6] work surface with integrated flume for experiments with weirs
[7] work surface with inside edge for safe placement of the accessory and for collecting the dripping water
[8] storage tank, measuring tank and work surface made of GRP

Technical Data

Pump
- power consumption: 250W
- max. flow rate: 150L/min
- max. head: 7,6m

Storage tank, capacity: 180L
Measuring tank
- at large volumetric flow rates: 40L
- at small volumetric flow rates: 10L

Flume
- LxWxH: 530x150x180mm

Measuring beaker with scale for very small volumetric flow rates
- capacity: 2L

Stopwatch
- measuring range: 0...9h 59min 59sec

Dimensions and Weight

LxWxH: 1230x770x1070mm
Weight: approx. 82kg

Required for Operation

230V, 50/60Hz, 1 phase or 120V, 60Hz/CSA, 1 phase

Scope of Delivery

1 base module
1 stopwatch
1 measuring beaker
1 hose
1 manual

Order Details

070.15000 HM 150 Base Module for Experiments in Fluid Mechanics

G.U.N.T Gerätebau GmbH, Hanskampring 15-17, D-22885 Barsbüttel, Phone +49 (40) 67 08 54-0, Fax +49 (40) 67 08 54-42, E-mail sales@gunt.de, Web http://www.gunt.de
We reserve the right to modify our products without any notifications.

TRANSIENT FLOW IN PIPES AND SURGE CHAMBERS

Transient flow

Flows in which flow conditions vary over time at an 'observation point' are known as transient. An exception is changes caused by turbulence. For flows with a free surface a transient flow can be recognised by the variation in the water level over time.

Transient flows occur during all startup and shutdown processes of turbomachines, in equipment and pipelines as well as during discharge processes from containers with variable liquid level; similarly in fluid vibrations (surge chamber), with water hammer processes in pipes and in open channels (positive and negative surges / hydropeaking).

In practice, the understanding of transient flow conditions is useful for commercial designs of pipelines (reserve in water hammer) in water distribution systems, process plants and hydroelectric power stations.

GUNT provides you with illustrative experimental units for studying transient flows in pipelines, representing water hammer, and showing how surge chambers work as safety elements in hydroelectric power stations.

We demonstrate the useful effect of water hammer for pumping water by the operating principle of a hydraulic ram.

Collapsed tank as a result of water hammer

Damaged pipe and pipe brackets caused by a water hammer

Pipe breakage, caused by water hammer

Water hammer in pipes

A common phenomenon of transient flow is the occurrence of water hammer in pipes. Fluctuations of pressure and flow rate can significantly exceed or fall below the designed pressure for a pipeline.

Water hammer is caused by:
- closing or opening shut-off elements in the pipeline
- startup and shutdown pumps and turbines
- re-commissioning systems
- change in the feed water level

Effects of water hammer

Water hammer causes damage to the affected system. Pipes can burst, pipe brackets may be damaged. Additionally valves, pumps, mounts and other components of the pipe system (e.g. heat exchangers) are at risk. In drinking water pipelines a water hammer can lead to dirty water being drawn in from outside. Since damage to pipelines is not necessarily immediately visible (e.g. a damaged flange), it is necessary to deal with the potential occurrence of water hammer when planning a pipeline.

Reducing water hammer

At smaller nominal diameters, installing an expansion tank or the choice of valves affects the emergence of water hammer. Valves and gate valves are less affected than shut-off valves and butterfly valves due to longer closing times. Safety valves can protect pipelines from damage caused by water hammer.

Water hammer in pipes with large nominal diameters and large head are mitigated or avoided by slowly operating the slide gate and using surge chambers at the entrance of the pressure pipes (similar to equalisation basins).

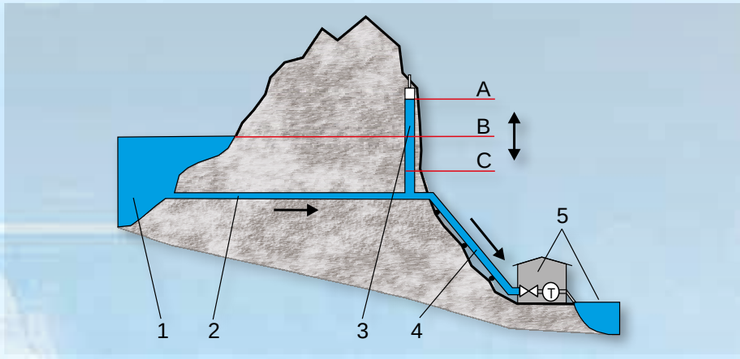

Hydroelectric power station with surge chamber, using the natural geological conditions
***1** reservoir, **2** head race tunnel,*
***3** surge chamber with variable water level, **4** pressure pipe,*
***5** turbine house with water discharge*
***A** turbine shutdown, **B** rest position, **C** turbine start up*

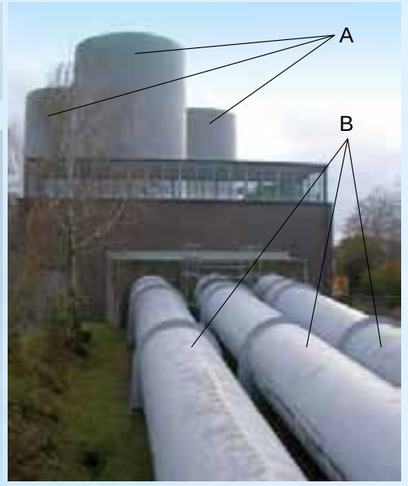

Niederwartha pumped storage power station in Dresden. At the entrance of the three pressure pipes there are three surge chambers, which are designed as open containers.
***A** surge chamber, **B** pressure pipes*

Principle of a surge chamber

Hydroelectric power stations use surge chambers to reduce pressure fluctuations. The water moving through the pressure pipe is deflected when valves in the surge chamber are closed. The water level can then oscillate up and down until it returns to rest. The kinetic energy of the flowing water in the pressure tube is therefore converted into potential energy of the increased water level in the surge chamber and not into destructive pressure energy.

The table shows an abstract from a common university curriculum. GUNT devices cover this content to the greatest extent.

CURRICULUM FOR THE FIELD OF TRANSIENT FLOW	GUNT PRODUCTS
Flow from tanks with variable water level: Discharge velocity	**HM 150.09, HM 150.12**
Water hammer: Investigation of water hammer and pressure waves in pipes, displaying vibrations in the water hammer, determining the speed of sound in water, determining reflection time, measuring water hammer (Joukowsky shock), how flow rate/closing velocity of valves affect water hammer	**HM 155, HM 156, HM 143**
Hydraulic ram: Use of water hammer to pump water	**HM 150.15**
Surge chamber oscillation: How a surge chamber works, natural frequency of the vibrations	**HM 143, HM 156**
Positive and negative surges / hydropeaking: transient flow behaviour, e.g. in open channels	
Transient drainage processes: Drainage, delayed drainage processes (retention)	**HM 143**
Flood wave	
Transient flow processes in hydraulic turbomachines: Cavitation	**HM 380, ST 250**

HM 156 Water Hammer and Surge Chamber

The illustration shows a similar unit.

*** Visualisation of water hammer**

*** Operation of a surge chamber**

*** Determining the sound velocity in water**

*** GUNT software for displaying the water hammer and oscillations**

Technical Description

In structures such as hydroelectric power stations, or in systems for supplying water, changes in flow rate result in pressure fluctuations. For example during startup and shutdown of hydraulic machines or by opening and closing shut-off elements. There is a distinction to be made between rapid pressure changes that propagate with the sound velocity (water hammer) and slow pressure changes caused by mass oscillations. Pipeline systems use air vessels or surge chambers to dampen water hammer and mass oscillations.

HM 156 is used to generate and visualise water hammer in pipes and to demonstrate how a surge chamber works. The trainer contains a pipe section with a ball valve and a surge chamber and a second pipe section with a solenoid valve.

In the first experiment a water hammer is produced by rapidly closing the ball valve. The sudden deceleration of the water mass releases kinetic energy, which is converted into potential energy in the surge chamber. The resulting pressure oscillations are measured by a pressure sensor behind the surge chamber and displayed in the software as a pressure curve. The oscillation can also be seen as pendulum movement of the water level in the surge chamber.

In the second experiment a rapid closing of the solenoid valve in the second pipe section produces a strong water hammer. The water's kinetic energy is converted into pressure energy. The water hammer and the subsequent oscillations are detected by two pressure sensors in the pipe section and displayed in the software as a pressure curve.

The water is supplied and the flow rate measured by the supply unit.

The well-structured instructional material sets out the fundamentals and provides a step-by-step guide through the experiments.

Learning Objectives / Experiments

Transient flow conditions in pipe systems by means of experimentation
- demonstrating water hammer in pipes
- determining the sound velocity in water
- understanding how a surge chamber works
- natural frequency in the surge chamber

HM 156 Water Hammer and Surge Chamber

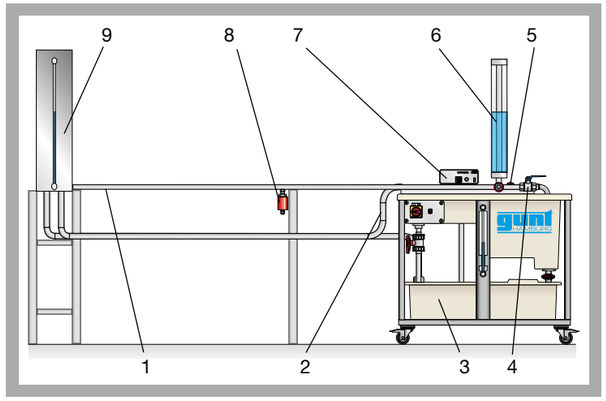

1 two parallel pipe sections, 2 water supply, 3 supply unit, 4 ball valve/solenoid valve, 5 pressure sensor surge chamber, 6 surge chamber, 7 control unit, 8 pressure sensor in the measuring section for water hammer, 9 tank

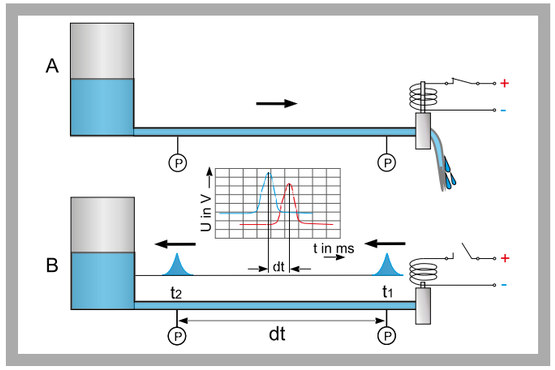

Producing a water hammer; A: solenoid valve open, B:solenoid valve closed; P pressure, t time, U voltage

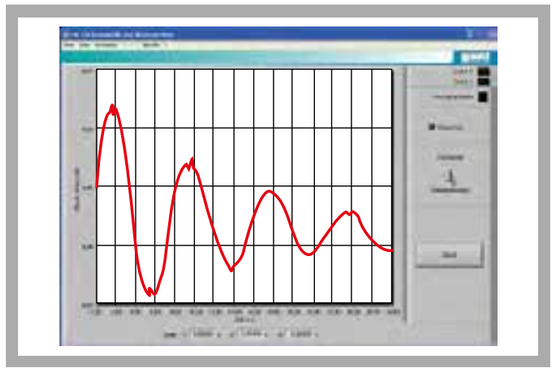

Screenshot of the software

Specification

[1] functioning of a surge chamber
[2] pipe section with ball valve and surge chamber
[3] surge chamber designed as transparent PMMA tank
[4] pressure sensor behind the water chamber for measuring the pressure wave
[5] pipe section with solenoid valve and two pressure sensors for measuring water hammer
[6] volumetric flow measurement via supply unit
[7] representation of the pressure curves with GUNT software
[8] GUNT software for data acquisition via USB under Windows Vista or Windows 7

Technical Data

Pipe section for pressure oscillations
- copper
- length: 5875mm, inner diameter: 26mm
- ball valve
- surge chamber, PMMA
  height: 825mm
  inner diameter: 50mm

Pipe section for water hammer
- copper
- length: 5875mm, inner diameter: 26mm
- distance between sensors: 3000mm
- solenoid valve, closing time: 20...30ms

Tank: 50L

Supply unit
Pump
- power consumption: 550W
- max. flow rate: 230L/min
- max. head: 11m

Tank: 1x 180L, 1x 40L

Measuring ranges
- pressure (pipe section): 2x 0...16bar abs.
- pressure (surge chamber): 0...0,3bar

Dimensions and Weight

LxWxH: 6800x800x2050mm (total)
Weight: approx. 155kg

Required for Operation

230V, 50/60Hz, 1 phase or 120V, 60Hz/CSA, 1 phase

Scope of Delivery

1 trainer with supply unit
1 CD with GUNT software
1 set of instructional material

Order Details

070.15600 HM 156 Water Hammer and Surge Chamber

G.U.N.T Gerätebau GmbH, Hanskampring 15-17, D-22885 Barsbüttel, Phone +49 (40) 67 08 54-0, Fax +49 (40) 67 08 54-42, E-mail sales@gunt.de, Web http://www.gunt.de
We reserve the right to modify our products without any notifications.

HM 143 Transient Drainage Processes in Storage Reservoirs

*** Investigation of transient drainage processes in storage reservoirs**

*** Simulation of rainwater retention basin and storage lakes**

*** Transparent surge chamber for observing oscillations after a water hammer**

*** GUNT software for displaying the water levels**

Technical Description

Transient drainage processes are taken into consideration when deciding on the dimensions of storage reservoirs. The processes occur for example, in rainwater retention basins and storage lakes.

The main purpose of the rainwater retention basin is to delay the drainage process by temporary intermediate storage. Storage lakes are used in applications such as water supply, energy conversion, or in flood protection. The water rises before it is fed over an overflow.

The drainage processes from reservoirs is realised by pipelines, tunnels or other means. A surge chamber prevents water hammer in pipes and fittings in the event of rapid changes in flow rate.

HM 143 is used to demonstrate transient drainage processes from storage reservoirs and how a surge chamber works. The trainer includes a basin with adjustable weir and a second, deeper-lying basin with overflow and drainage line. A surge chamber is installed in the drainage line.

In the "rainwater retention basin" experiment basin A and basin B simulate retention basins. The discharge is adjusted by using valves in the drainage line. This illustrates typical delayed drainage processes.

In the experiment "storage lakes", the transient drainage processes are shown in two long-term storage reservoirs. In this experiment the weir is used as a free overfall weir.

In the "surge chamber" experiment a water hammer is produced by rapidly closing a gate in the drainage line. The oscillation can be seen as pendulum movement of the water level in the surge chamber.

The water levels in the basins and at the surge chamber are detected by pressure sensors and displayed using the GUNT software.

The well-structured instructional material sets out the fundamentals and provides a step-by-step guide through the experiments.

Learning Objectives / Experiments

- demonstrating transient drainage processes in two rainwater retention basins located one behind the other
- demonstrating transient drainage processes in two storage lakes located one behind the other
- recording oscillations of the water level in a surge chamber after water hammer
- recording and displaying water level fluctuations

HM 143 Transient Drainage Processes in Storage Reservoirs

1 basin A with adjustable weir, 2 surge chamber, 3 valve in drain pipe, 4 gate for generating water hammer, 5 water connection, 6 overflow pipe, 7 basin B with overflow, 8 flow meter

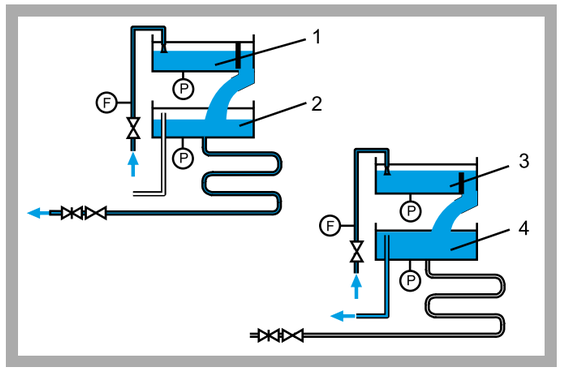

Top: "rainwater retention basin": 1 basin A as drainage channel with gate, 2 basin B as rainwater retention basin; bottom: "storage lakes"; 3 basin A as storage reservoir with weir, 4 basin B as storage reservoir with overflow; F flow rate, P pressure

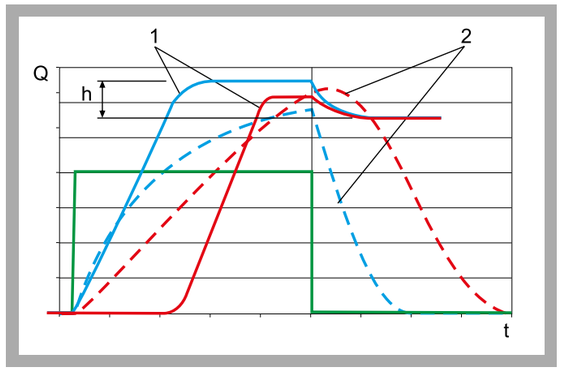

Transient drainage processes; blue: basin A, red: basin B, green: water supply; Q discharge, t time, h head; 1: "storage lakes", 2: "rainwater retention basin" with delayed drainage process

Specification

[1] transient drainage processes in storage reservoirs
[2] functioning of a surge chamber
[3] "rainwater retention basin" experiment: basin A and basin B as short-term storage reservoirs, rectangular weir as gate
[4] "storage lakes" experiment: basin A and basin B are used as long-term storage reservoirs, rectangular weir as overfall weir
[5] "surge chamber" experiment: transparent pipe as surge chamber in drainage line of basin B
[6] gate in the drainage line for generating water hammer
[7] pressure sensors at both basins and the surge chamber capture the water level fluctuations
[8] representation of the variation in the water levels with GUNT software
[9] GUNT software for data acquisition via USB under Windows Vista or Windows 7

Technical Data

Basin A: LxWxH: 900x900x300mm
- material: stainless steel
- rectangular weir according to Rehbock, adjustable
  as gate, gate opening: 0...200mm
  as weir, weir height: 0...200mm,
  overflowed width: 60mm

Basin B: LxWxH: 900x900x300mm
- material: stainless steel
- overflow: 200mm

Surge chamber
- material: PMMA
- inner diameter: 62mm
- height: 1800mm

Measuring ranges
- pressure: 2x 0...100mbar, 1x 0...200mbar
- flow rate: 300...3300L/h

Dimensions and Weight

LxWxH: 1040x1220x2100mm
Weight: approx. 165kg

Required for Operation

230V, 50/60Hz, 1 phase or 120V, 60Hz/CSA, 1 phase
Water connection and drain: 3000L/h

Scope of Delivery

1 trainer
1 CD with GUNT software
1 set of instructional material

Order Details

070.14300 HM 143 Transient Drainage Processes in Storage Reservoirs

G.U.N.T Gerätebau GmbH, Hanskampring 15-17, D-22885 Barsbüttel, Phone +49 (40) 67 08 54-0, Fax +49 (40) 67 08 54-42, E-mail sales@gunt.de, Web http://www.gunt.de
We reserve the right to modify our products without any notifications.

2 HYDRAULIC ENGINEERING

OPEN-CHANNEL FLOW

Overview	Basic Knowledge: Open-Channel Flow	68
Overview	Open-Channel Flow in the Lab	100
Overview	An Overview of Gunt Experimental Flumes	102
Overview	Technical Details for Gunt Experimental Flumes – the Closed Water Circuit	104
Overview	Technical Details for Gunt Experimental Flumes – Structural Features	106
Overview	Gunt Experimental Flumes: Instrumentation	108
Overview	Gunt Experimental Flumes: Laboratory Design	110
Overview	HM 160 Experimental Flume 86 x 300 mm	112
HM 160	Experimental Flume 86 x 300 mm	114
Overview	HM 162 Experimental Flume 309 x 450 mm	116
HM 162	Experimental Flume 309 x 450 mm	118
Overview	HM 162 Experimental Flume: A Few Impressions	122
Overview	HM 161 Experimental Flume 600 x 800 mm	124
Overview	HM 161 Experimental Flume: A Few Impressions	126
HM 161	Experimental Flume 600 x 800 mm	128
Overview	Accessories for Gunt Experimental Flumes – Wave Generator	131
Overview	Accessories for Gunt Experimental Flumes – Sediment Transport	132
Overview	Accessories for Experimental Flumes HM 160, HM 161 and HM 162	134
Overview	Setup of Gunt Experimental Flumes using the Example of HM 162	148
Overview	Gunt Experimental Flumes are being used all Around the World	150

SEDIMENT TRANSPORT

Overview	Basic Knowledge: Fundamentals of Sediment Transport	152
Overview	Sediment Transport in Running Waters	160
HM 166	Fundamentals of Sediment Transport	162
HM 140	Open-Channel Sediment Transport	164
HM 168	Sediment Transport in River Courses	166
HM 142	Separation in Sedimentation Tanks	168

SEEPAGE FLOW

Overview	Basic Knowledge: Seepage Flow	170
Overview	Experimental Units on the Topics of: Seepage Flow, Groundwater Flow and Filtration	174
HM 152	Potential Flow	176
HM 165	Studies in Hydrology	178
HM 167	Ground Water Flow	180
HM 169	Visualisation of Seepage Flows	182
HM 145	Advanced Hydrological Investigations	184
HM 141	Hydrographs after Precipitation	186
CE 116	Cake and Depth Filtration	188

Visit our website www.gunt.de

HYDRAULIC ENGINEERING

Structural measures, technical interventions and construction in the area of groundwater, surface water and the coast are all referred to as **hydraulic engineering.** The basic principles of hydraulic engineering are taught in hydromechanics and hydrology.

Hydromechanics is divided into hydrostatics, flow in pipes, flow in open channels and flow in groundwater. This catalogue covers hydrostatics and pipe flow in the section on the **fundamentals of fluid mechanics.**

Hydrology is concerned with the natural distribution of water over and under the ground. Some processes from hydrology are demonstrated in the subsections of **sediment transport** and **seepage flow.**

The forces and phenomena in running waters are covered in the **open-channel flow** subsection. What happens if – in addition to water – sediment and/or solids are also transported in the running water, as is usually the case in nature? Questions on this topic are tackled in the subsection on **sediment transport.**

The **seepage flow** subsection deals with issues of how water is transported in soil.

OPEN-CHANNEL FLOW

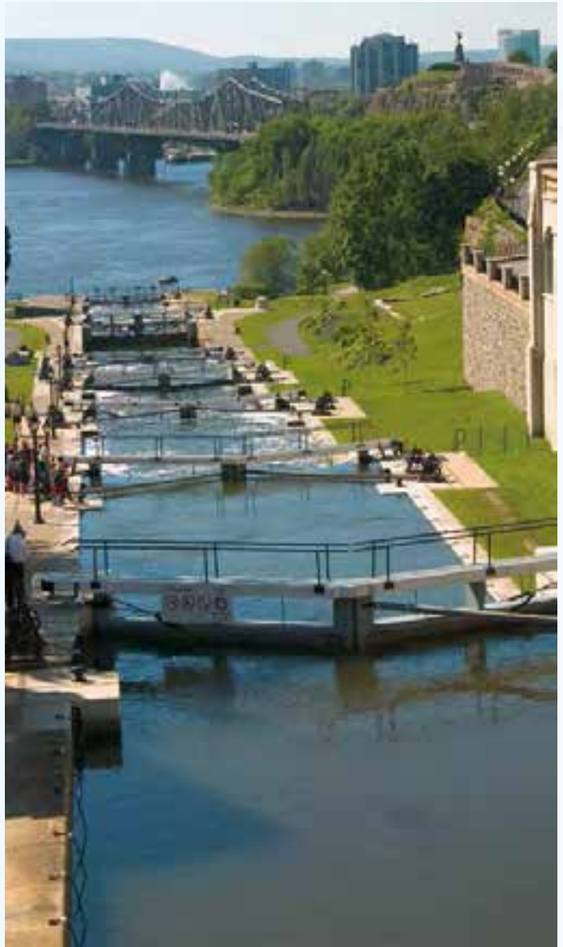

Open-channel flow involves, amongst other things, the management of watercourses for the purpose of navigability, damming of lakes for power generation and/or storage of drinking water and flood protection measures.

Experimental flumes are used in teaching and research to demonstrate and study the main phenomena of open-channel flow at the laboratory scale. The GUNT experimental flumes demonstrate flow conditions in open channels with a rectangular cross-section. There are a variety of models that are used in the experimental flumes that cover topics such as control structures, change in cross-section, discharge measurement and waves.

SEDIMENT TRANSPORT

This subsection investigates the transport of sediments in flowing watercourses. When talking about sediment transport, we distinguish between suspended matter and bed-load transport.

Rivers primarily involve bed-load transport. When sediment is removed, this is called erosion or scouring. Siltation occurs when sediment is deposited. Sediment transport can be influenced by hydraulic engineering measures.

Suspended load transport is a topic in the field of wastewater treatment plants and upstream of barrages and dams. In wastewater treatment plants, the sedimentation of suspended matter is desired, whereas in the case of dams it causes problems.

The GUNT units for bed-load transport study, for example, changes in the bed surface of a river and the formation of bed forms. It is possible to observe the formation and migration of dunes. Furthermore, erosion and siltation at bridge piers are also considered.

SEEPAGE FLOW

Seepage flows and groundwater flows are water movements in a permeable subsoil (sand, gravel, etc.) This includes the seepage and retention of precipitation. In hydraulic engineering it is the seepage through earth dams or the seepage under barrages in particular that are of importance.

The GUNT units demonstrate and study the relationship between precipitation, seepage and groundwater flow. The influence of wells on the groundwater level and the storage capacity of soils during these processes is considered.

Contents

Consistent with most textbooks, the GUNT experimental flumes teach the fundamentals of open-channel flow using an experimental flume with rectangular cross-section.

In the first part of this section we present the basics principles of open-channel flow. Parallel to this, we show how certain issues and phenomena can be implemented by experiment. In principle, these explanations apply to all GUNT experimental flumes and their accessories.

Basic principles of open-channel flow 70
hydraulic radius, wetted perimeter, typical flume profiles

Uniform discharge in a rectangular flume 72
flow formulae

Steady discharge 73
continuity equation
Bernoulli's equation
specific energy

Non-uniform discharge in a rectangular flume 74
flow transition
specific energy diagram
specific force diagram

Determining the loss of specific energy in a hydraulic jump 76

Froude number and critical discharge 77
momentary and permanent disturbance
hydraulic jump at different Froude numbers 79

Positive and negative surges in open channels 80

Energy dissipation 82
stilling basin

Control structures 84
Flow over weirs
- overfall condition at the weir 84
- flow over fixed weirs 85
- overfall types 86
- calculation of discharge after Poleni 86

ogee-crested weirs 87
sharp-crested weirs 88
broad-crested weirs 89
siphon weir 90
gates 91

Culvert 92

Local losses in flumes 93
piers

Methods of discharge measurement 94
flow-measuring flumes
measuring weirs 95

Transient flow: flow-induced vibrations 96
vibrating piles

Sediment transport 97
bed-load transport

Transient flow: waves 98

In nature, watercourses represent "open-channel flow". For centuries, humans have been making structural interventions to watercourses: irrigation systems, flood protection and utilisation of rivers for navigation and power generation.

Famous examples are ancient water systems (aqueducts) or agricultural irrigation channels extending over very large distances: the "Levada" in Portugal (top).

FREQUENTLY USED FORMULA SYMBOLS

E	specific energy
ΔE	loss of specific energy
h	discharge depth
h_c	critical depth
h_d	downstream water discharge depth
h_o	weir head
h_u	upstream water discharge depth
J	energy grade line
Q	discharge
v	flow velocity
W	height of weir

Basic principles of open-channel flow

Open-channel flows are widely spread. Typical examples include rivers and canals, drainage channels, gutters, water rides at amusement parks or sewerage. The driving force of this normally turbulent flow is gravity. Open-channel flows are characterised by their free surface. Compared to pipe flows, open-channel flows have one more degree of freedom as a result of the free surface.

There are essentially two types of open-channel flow:

- uniform flow (the discharge depth (water depth) remains equal; acceleration = deceleration)
- non-uniform flow (the discharge depth is changed by acceleration or deceleration)

The discharge can be either **subcritical, critical** or **supercritical.**

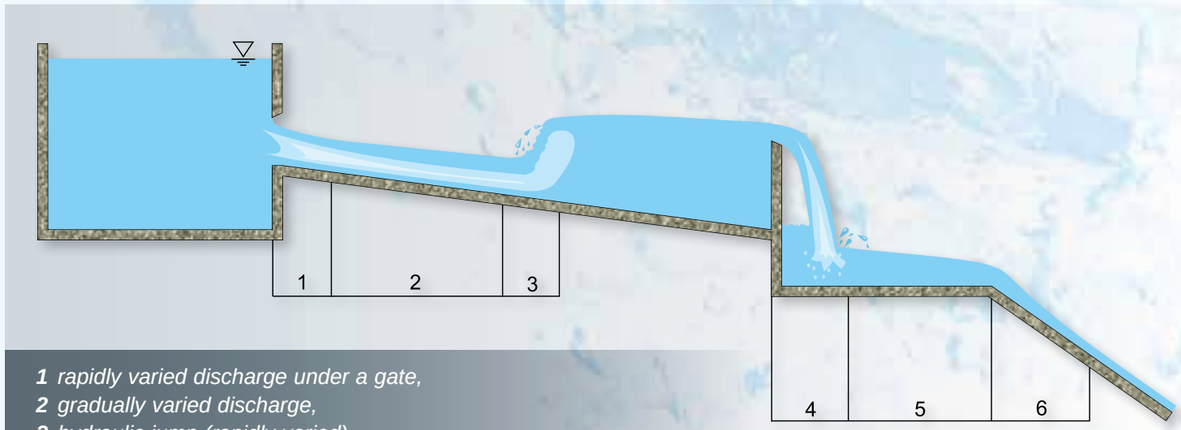

1 rapidly varied discharge under a gate,
2 gradually varied discharge,
3 hydraulic jump (rapidly varied),
4 weir overfall (rapidly varied),
5 gradually varied discharge,
6 non-uniform flow at a change of slope

HM 162.77
Flume Bottom with Pebble Stones

Typical flume profiles

In most cases an approximation of the respective cross-section of an open-channel flow can be illustrated with only a few geometric profiles. Circular, semi-circular, square, trapezoidal and combinations of these profiles are perfectly suited to making the flume easier to model and calculate mathematically. It is often important to determine the discharge ***Q*** and the discharge depth ***h*** at defined locations. Typical variables for calculations are the flow area ***A*** (or the area of flow), the wetted perimeter ***P*** and the hydraulic radius ***R***.

In the case of a **rectangular cross-section,** these variables are defined as follows:

- flow area $A = bh$
- wetted perimeter $P = b+2h$
- hydraulic radius $R = A/P = bh/(b+2h)$
  In wide, shallow flumes the hydraulic radius ***R*** therefore corresponds to the discharge depth ***h***.

In the case of artificial flumes, such as ducts, the hydraulically efficient profile is an important variable – an optimum profile design saves materials and costs:

- given discharge ***Q*** + energy grade line ***J***:
  determine minimum flow area ***A***
- given discharge ***Q*** + flow area ***A***:
  determine minimum energy grade line ***J***.

Optimal hydraulic flume cross-section

In the case of the smallest wetted perimeter, based on the given area, we refer to the optimal hydraulic cross-section.

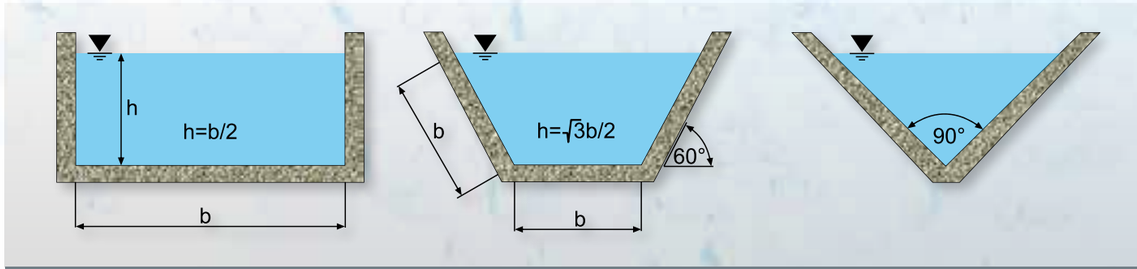

Rectangle, trapezoid with 60° angles, triangle;
h *discharge depth,* ***b*** *flume width*

GUNT experimental flumes have a rectangular cross-section. In addition to being able to install different models, they also allow the user to change the slope and the flume bottom, affecting the surface and roughness. A large number of experiments on uniform and non-uniform open-channel flow, including measurement of flow velocity ***v*** and discharge depth ***h***, is possible.

Uniform discharge in a rectangular flume

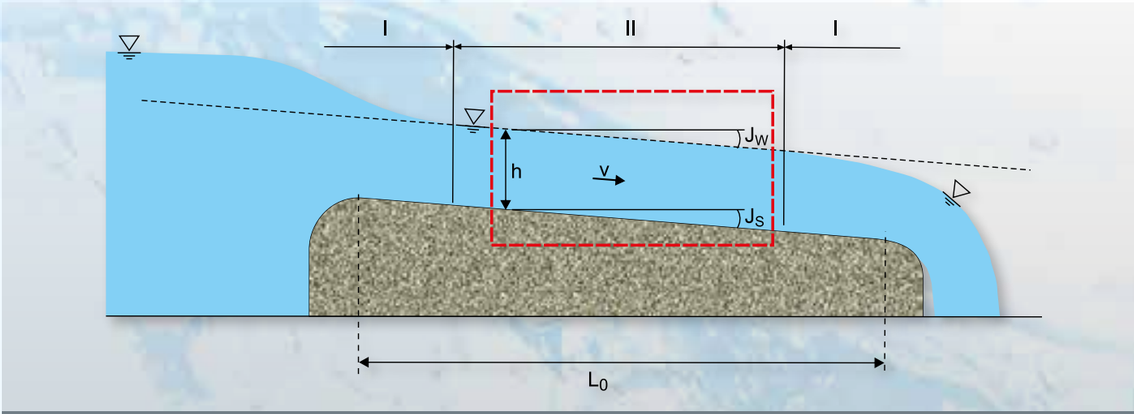

I non-uniform discharge, II uniform discharge;
h depth of discharge, J_S uniform bottom slope, J_W slope of water surface profile,
L_0 length of the flume with bottom slope J_S and constant width, v flow velocity, red frame control volume

In uniform open-channel flow the discharge depth ***h*** remains equal, i.e. parallel to the bottom. This also means that the flow velocity ***v*** remains constant.

The discharge depth ***h*** can also be described as a pressure head (a component of the specific energy). These energy heads are often applied in the form of what are known as grade lines. In the energy grade line ***J*** the most significant component in many cases is the discharge depth ***h***. In uniform open-channel flow the energy grade line ***J*** is equal to the bottom slope J_S and thus equal to the discharge depth ***h***. In uniform open-channel flow the **normal discharge** prevails, i.e. the bottom slope J_S balances out the friction losses in the discharge ***Q***. The energy grade line, water surface profile and bottom slope are all parallel.

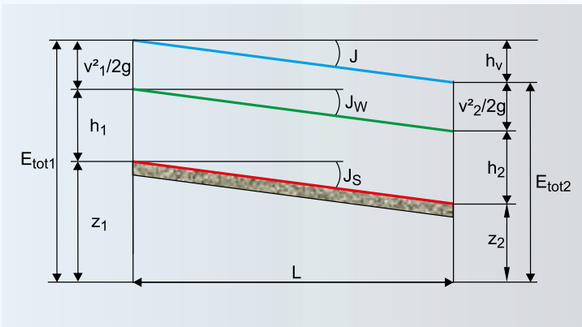

*Energy grade line (blue) **J:** $h_v / L = (E_1 - E_2)/L$*
Slope of water surface profile (green) J_w: $[(h_1+z_1)-(h_2+z_2)]/L$
Bottom slope (red) J_s: $(z_1-z_2)/L$

According to Bernoulli, the total energy E_{tot} is composed of three components:
- *velocity head ($v^2/2g$)*
- *pressure head ($h=p/\rho g$)*
- *elevation (z)*

Flow formulae

Flow formulae describe the relationship between the discharge ***Q*** and the discharge depth ***h*** at a given shape of cross-section and roughness characteristic. The shape of cross-section is taken into account in the hydraulic radius; the discharge depth ***h*** comes into play via the energy grade line ***J***.

Commonly used formulae for general flumes are
- Darcy-Weisbach
- Manning-Strickler (also Gauckler-Manning-Strickler).

Flow formulae are based on empirical values.

Steady discharge

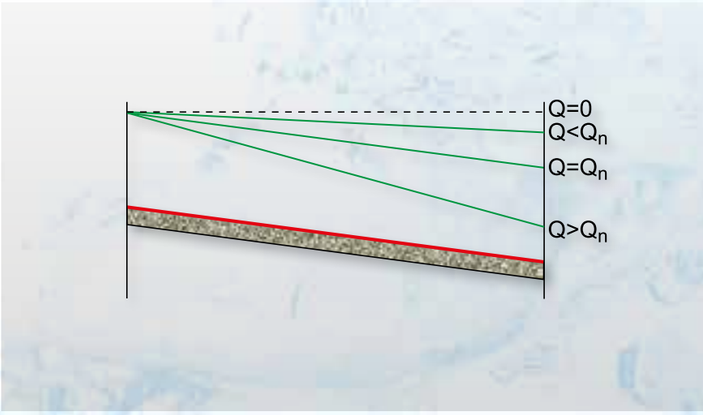

Course of the water surface profile in the control volume for different steady discharges:

$Q = 0$: no discharge

$Q < Q_n$: decelerated discharge

$Q = Q_n$: uniform discharge, also called normal discharge

$Q > Q_n$: accelerated discharge

When considering energy head on the control volume we can resort to **Bernoulli's equation** and the **continuity equation**.

Continuity equation:

$Q = const = AV = bhv$ or $bh_1v_1 = bh_2v_2$

Bernoulli's equation (general conservation of energy):

$$\frac{1}{2}mv^2 + mgh = const$$

Expressed with energy head we get:

$$\frac{v_1^2}{2g} + h_1 + z_1 = \frac{v_2^2}{2g} + h_2 + z_2 + h_v$$ with friction loss h_v

With $v = \frac{Q}{bh}$ from the continuity equation we get:

$$\frac{1}{2}\frac{Q^2}{gb^2h_1^2} + h_1 + (z_1 - z_2) = \frac{1}{2}\frac{Q^2}{gb^2h_2^2} + h_2 + h_v$$

For **normal discharge**:

$h_1 = h_2$, thus $h_v = z_1 - z_2$

The **specific energy** is defined as

$$E = h + \frac{v^2}{2g} = h + \frac{Q^2}{2gh^2}$$

It is composed of the velocity head and the pressure head.
Another form of notation is:

$$h^3 - Eh^2 + \frac{Q^2}{2g} = 0$$

As a result we get a third-order equation for the discharge depth ***h***. The discharge depth ***h*** depends on the specific energy ***E*** and the discharge ***Q*** or on the slope and roughness respectively.

Non-uniform discharge in a rectangular flume

In many cases the discharge ***Q*** in a flume is not uniform. We distinguish between **gradually** and **rapidly varying** discharge.

- gradually varying discharge: the discharge depth ***h*** varies, the discharge ***Q*** or type of flow itself is (initially) **subcritical**. Gradually varying discharge occurs for example, in a slightly sloping flume with considerable surface roughness.
- rapidly varying discharge occurs for example during flow over weirs. In many cases the discharge is **supercritical**.

Subcritical discharge has a large discharge depth ***h*** at smaller flow velocity ***v***. In supercritical discharge the opposite is true: small discharge depth ***h*** and large flow velocity ***v***.

The **flow transition** from subcritical to supercritical discharge occurs with a continuous change of discharge depth ***h***, flow velocity ***v*** and specific energy ***E***, for example with an increase in the slope.

The flow transition from supercritical to subcritical discharge, on the other hand, always occurs with an abrupt change in the discharge depth ***h*** and a loss of specific energy ΔE, such as in a **hydraulic jump**.

Relationship between discharge *Q*, specific energy *E* and discharge depth *h*

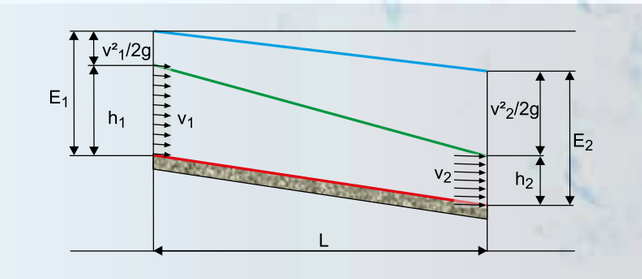

Energy heads of a control volume:

velocity head ($v^2/2g$),
pressure head (h),
specific energy (E)

Considerations of the energy head at the control volume result in a third-order equation for the discharge depth ***h***. The discharge depth ***h*** depends on the specific energy ***E*** and the discharge ***Q***. A **specific energy diagram** shows the discharge depth ***h*** graphically as a function of the specific energy ***E*** at constant discharge ***Q***. The minimum specific energy E_{min} only has one possible discharge depth, which is known as the critical depth h_C. Critical discharge prevails at the critical depth h_C. For all other specific energies there are two alternative depths that are relevant from a physics point of view (see diagram with hydraulic jump). The correct one of the two discharge depths has to be calculated in each case (is there subcritical or supercritical discharge?).

The maximum discharge ***Q*** at a given specific energy ***E*** can also be determined.

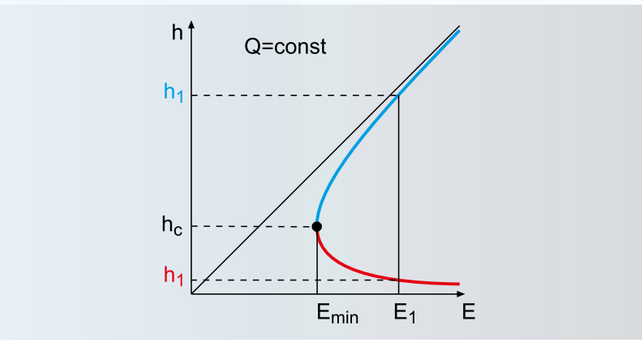

Specific energy diagram:

h *discharge depth,* h_c *critical depth,*
h_1 *alternative supercritical discharge depth, for specific energy* E_1*,*
h_1 *alternative subcritical discharge depth for specific energy* E_1*,*
E_{min} *minimum specific energy,*
E *specific energy;*

subcritical discharge,
supercritical discharge

Relationship between momentum equation, specific force *F* and discharge depth *h*

The third important equation after **Bernoulli** and the **conservation of mass** is the **momentum equation**. The equilibrium of forces is established at the control volume. In many cases, the influence of the weight and the friction force is negligible. Therefore only the forces acting on the flow areas come into play: the static pressure force and the dynamic motive force. The specific force ***F*** is the sum of these two forces and is determined by the momentum equation.

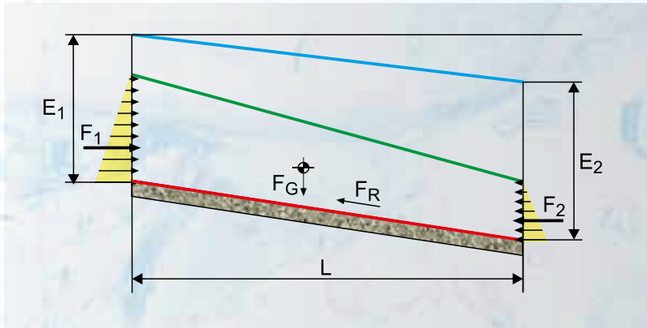

Forces occurring at a control volume:

F_1, F_2 *force of the water on the flow areas,*
E_1, E_2 *specific energies of a control volume,*
F_G *weight,*
F_R *friction force*

The specific force can also be represented in a diagram. The **specific force diagram** plots the discharge depth ***h*** over specific force ***F*** at constant discharge ***Q***. Similar to the specific energy diagram, there is the minimum specific force F_{min} at critical depth h_C. For all other specific forces there are two sequent depths.

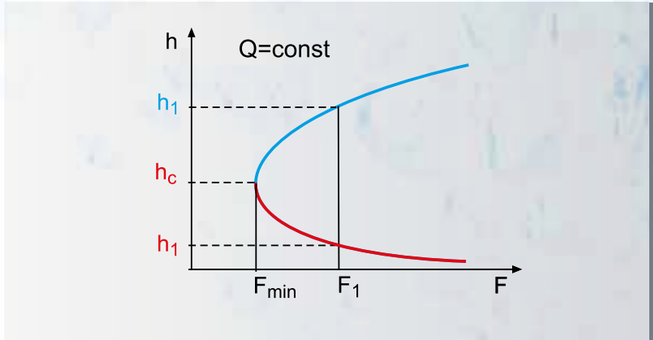

Specific force diagram:

h *discharge depth,* h_c *critical depth,*
h_1 *sequent supercritical depth for specific energy* E_1*,*
h_1 *sequent subcritical depth for specific energy* E_1*,*
F_{min} *minimum specific force,*
F *specific force;*

subcritical discharge,
supercritical discharge

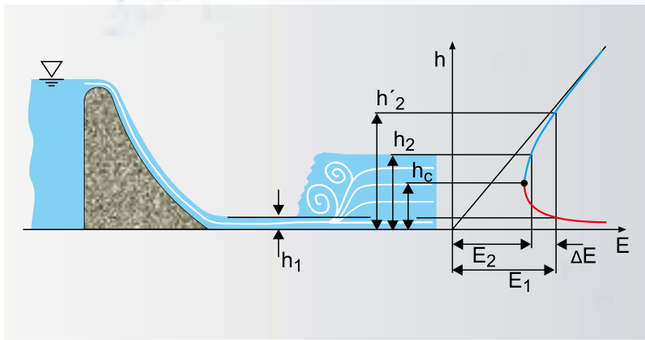

Specific energy loss in the hydraulic jump:

h_1 *supercritical discharge depth,*
h'_2 *alternative subcritical discharge depth to* h_1 *without energy head loss,*
h_2 *actual, sequent subcritical discharge depth after hydraulic jump,*
ΔE *loss of specific energy*

Determining the loss of specific energy in a hydraulic jump

At the hydraulic jump a supercritical discharge ***Q*** becomes subcritical again. The discharge depth ***h*** rises rapidly and increases after the hydraulic jump. Energy is dissipated at the hydraulic jump due to the resulting turbulence. However, the momentum is retained, which means that there are two sequent depths ***h*** for the same specific force ***F***. The ratio of the sequent depths h_1 and h_2 is described by the following formula:

$$\frac{h_2}{h_1} = \frac{1}{2}\left(\sqrt{8Fr_1^2+1}-1\right) \quad \text{or} \quad h_2 = \frac{-h_1}{2} + \sqrt{\frac{h_1^2}{4} + 4h_1\frac{v_1^2}{2g}}$$

Using the given specific energy diagram and an analogue specific force diagram, it is a simple matter to determine the resulting specific energy loss ΔE graphically:

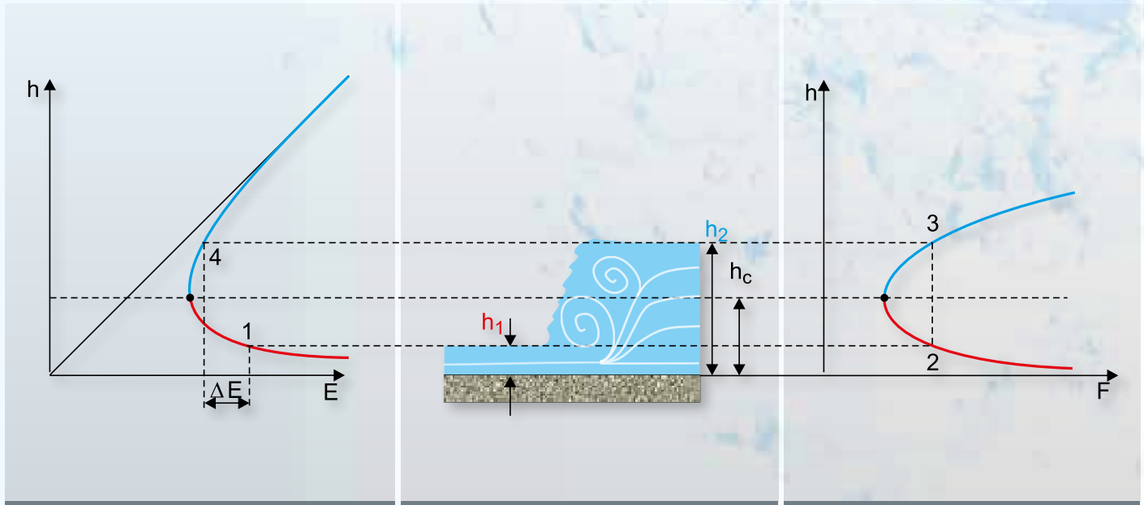

Specific energy diagram | *Hydraulic jump* | *Specific force diagram*

The discharge depth h_1 is entered in the specific energy diagram and the specific force diagram (points 1 and 2). To determine the discharge depth h_2 after the hydraulic jump, the sequent depth to h_1 is determined graphically in the specific force diagram (point 3). The specific forces F_1 in point 2 and F_2 in point 3 are equal (conservation of momentum). Then the discharge depth h_2 is entered in the specific energy diagram (point 4). The specific energies E_1 and E_2 are read in the diagram. The specific energy loss ΔE that occurs in the hydraulic jump is equal to the difference between the specific energies.

The resulting specific energy loss ΔE *can also be calculated using the following formula:*

$$\Delta E = E_1 - E_2 = \left(h_1 + \frac{v_1^2}{2g}\right) - \left(h_2 + \frac{v_2^2}{2g}\right)$$

Froude number and critical discharge

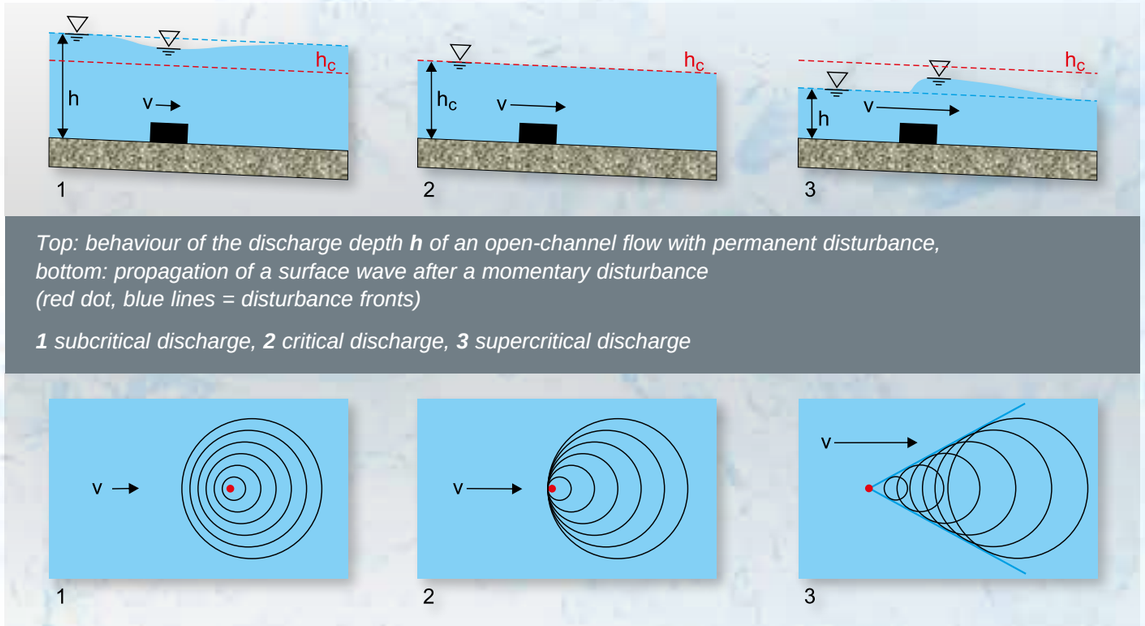

*Top: behaviour of the discharge depth **h** of an open-channel flow with permanent disturbance, bottom: propagation of a surface wave after a momentary disturbance (red dot, blue lines = disturbance fronts)*

***1** subcritical discharge, **2** critical discharge, **3** supercritical discharge*

Subcritical discharge
Disturbances in the discharge behaviour are noticeable upstream. The flow velocity ***v*** is less than the propagation velocity ***c*** of a surface wave. Subcritical discharge usually has a large discharge depth ***h*** at low flow velocity ***v***.

Critical discharge
Disturbances in the discharge behaviour are not noticeable upstream. The flow velocity ***v*** is equal to the propagation velocity ***c*** of a surface wave.

Supercritical discharge
Disturbances in the discharge behaviour are not noticeable upstream. The flow velocity ***v*** is greater than the propagation velocity ***c*** of a surface wave.

The **Froude number** describes the ratio of flow velocity ***v*** to propagation velocity ***c*** of a surface wave and therefore serves as a measure of subcritical or supercritical discharge. The same Froude number means a dynamically similar open-channel flow.

Fr < 1: subcritical
Fr = 1: critical
Fr > 1: supercritical

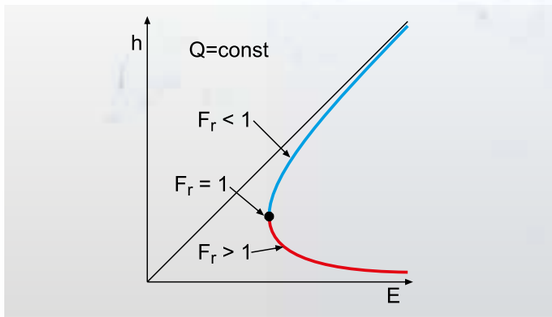

Specific energy diagram with Froude number:

h *discharge depth,*
E *specific energy,*
Fr *Froude number*

Open-channel flow has many similarities with compressible flow. In both cases there is a dimensionless number (Froude or Mach) that characterises the flow. Many of the differences between subcritical and supercritical discharge have analogies in subsonic and supersonic flow.

Froude number and critical discharge

Sill (HM 162.44)

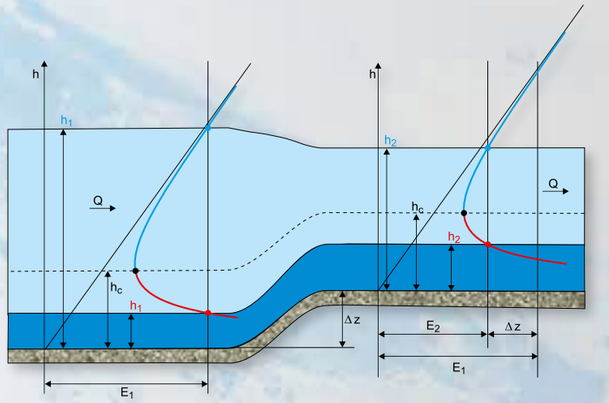

Effect of a sill, shown in the specific energy diagram:

subcritical discharge, supercritical discharge, critical discharge (dashed line).
From a given specific energy diagram, we can simply read or calculate the new discharge depth h_2 *according to the sill.*

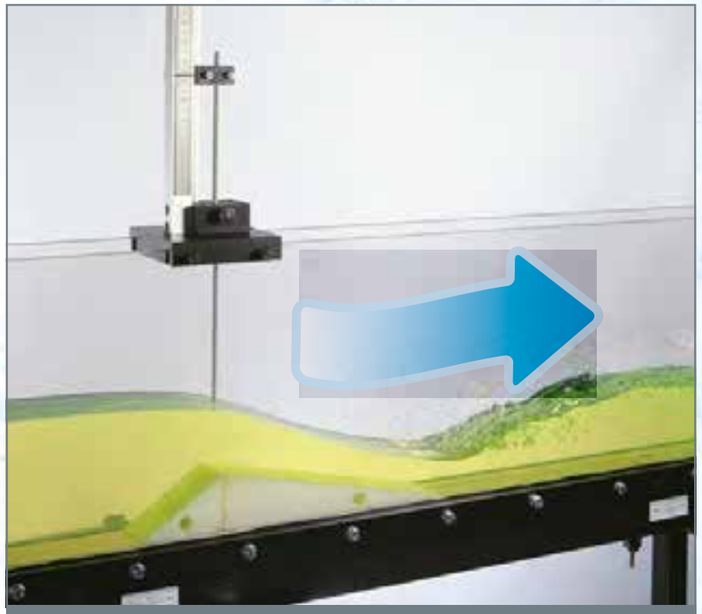

Hydraulic jump at a weir

Hydraulic jump in a washbasin

Critical discharge (Froude number = 1)

At the minimum specific energy E_{min}, the discharge depth h corresponds to the critical depth h_C. At this point, the Froude number is Fr = 1, there is a prevailing critical discharge and the propagation velocity c is equal to the flow velocity v. Also, at this point the specific force F in the flume is minimal.

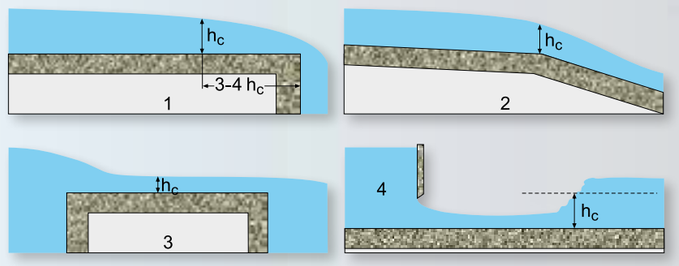

Examples where critical depths (critical discharge) may occur:

1 critical depth near free overfall,
2 change in the bottom slope,
3 flow over a broad-crested weir,
4 hydraulic jump

Type of flow	Discharge depth	Flow velocity	Slope	Froude number
Subcritical discharge	$h > h_c$	$v < v_c$	$J < J_{KRIT}$	$Fr < 1$
Critical discharge	$h = h_c$	$v = v_c$	$J = J_{KRIT}$	$Fr = 1$
Supercritical discharge	$h < h_c$	$v > v_c$	$J > J_{KRIT}$	$Fr > 1$
For rectangular flume	$h_c = \sqrt[3]{\frac{Q^2}{gb^2}}$	$v_c = \sqrt{gh_c}$		$Fr = \frac{v}{\sqrt{gh}}$

Illustration of the hydraulic jump at different Froude numbers

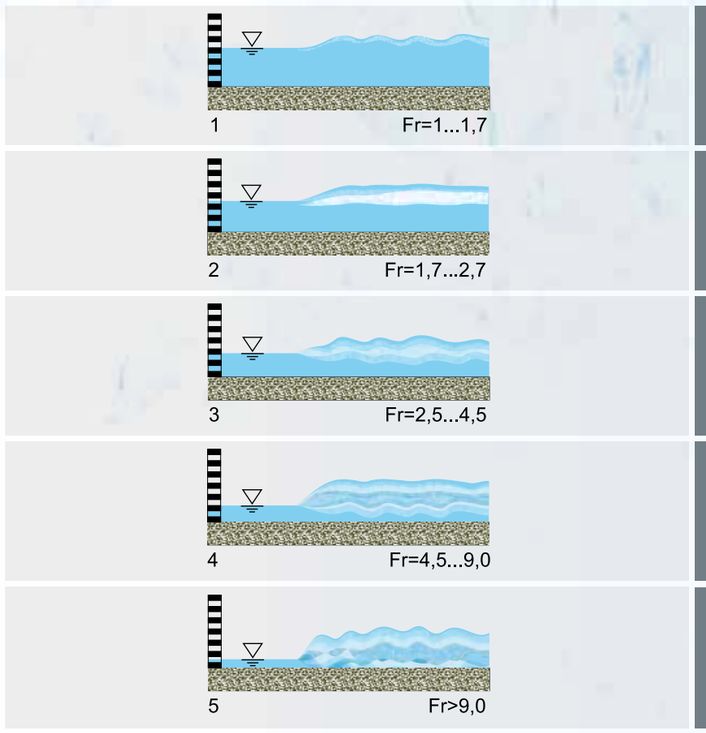

1 undulating jump

2 weak jump

3 oscillating jump

4 steady jump

5 strong jump

Positive and negative surges in open channels

The phenomena of positive and negative surges in an open channel describe waves caused by a sudden change in the discharge. In pipes, there is the similar phenomenon with water hammers. The sudden change of the discharge may occur for example, when opening and closing a gate or switching off turbines. The positive surge wave is formed steeply (propagation velocity of the wave increases with increasing water depth), while the negative surge wave is rather flat.

As a first approximation, positive and negative surge heights are equal in size and can be calculated using the continuity equation. In the case of a sudden opening (left illustration) we refer to a discharge surge and fill surge, and in the case of closure (right illustration) we refer to backwater surge and downstream negative surge.

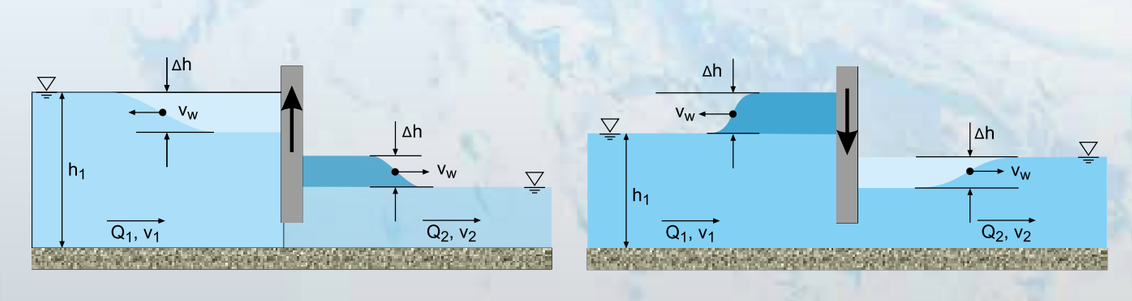

Positive and negative surge waves on sudden operation of a gate:

left: opening the gate, right: closing the gate;
***Q** discharge, **h** discharge depth, **Δh** positive or negative surge height, **v** flow velocity,*
***v_W** propagation velocity of the wave;*
***Index 1** variables before the disturbance, **Index 2** variables after the disturbance,*
positive surge wave, negative surge wave

Positive surge wave

OPEN-CHANNEL FLOW IN THE LAB

Energy dissipation

Supercritical flow often also has a high flow energy, which is composed of the kinetic energy necessary for further flow and excess energy. The excess energy can lead to erosion of the bottom, amongst other things. Therefore it is important to dissipate this excess energy. This can be realised in the hydraulic jump mentioned above (naturally occurring or intentional in a stilling basin) or in specially designed overfalls (stepped, ski jump style). A spillway fitted with a ski jump results in a free jet that sprays into the air and that has dissipated its energy after hitting the bottom (see photo below left).

Excess energy can be found at the following locations:

- at cross-sectional constrictions, e.g. weirs, gates
- in spillways chutes / steep slopes
- upon change in the discharge depth due to obstacles

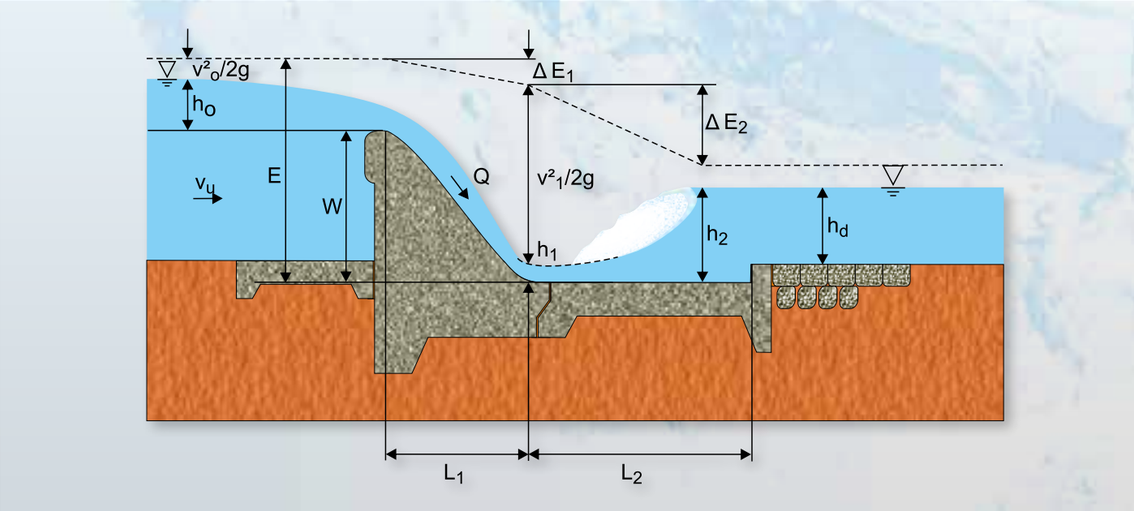

Supercritical flow at the overflow weir with subsequent energy dissipation in the stilling basin:

***h_o** weir head, **v_U** upstream water flow velocity, **W** height of weir, **E** specific energy, **Q** discharge, **h_1** smallest discharge depth, **h_2** discharge depth after hydraulic jump, **h_d** downstream water discharge depth, **L_1** length of weir body, **L_2** length of stilling basin, **ΔE** dissipated energy (specific energy loss);*

dashed line: energy line

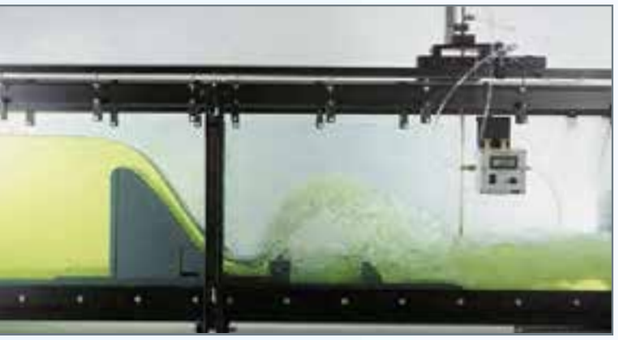

HM 162 with ogee-crested weir HM 162.32 and sills from HM 162.35

Ogee-crested weir HM 162.32

Stilling basins have the following functions:

- stabilisation of the hydraulic jump at a defined location (depending on discharge depth ***h*** and / or backwater conditions in the downstream water, the position of the hydraulic jump may vary)
- in addition to the hydraulic jump, further energy dissipation through structural elements such as baffle blocks, sills
- protection of the flume bottom against erosion and scour formation (funnel or kettle-shaped deepening in the flume bottom)
- conversion of the water's excess energy (kinetic and potential) into thermal and sound energy; good energy conversion occurs at Froude numbers from 4 to 8.

It is important that the hydraulic jump does not migrate out of the stilling basin into the downstream water, where it may cause scour. A slight backwater is recommended to avoid this from happening. The ratio of the actual **discharge depth *h*** to the theoretically required discharge depth ***req. h*** can be used as a measure of the backwater in the stilling basin.

The stilling basin can be made more efficient through various design measures. It is possible to widen the flow cross-section or to use what are known as chute blocks.

In GUNT experimental flumes, chute blocks and sills can be installed on the bottom of the stilling basin. These energy dissipation elements support the energy conversion and dissipate excess energy more quickly.

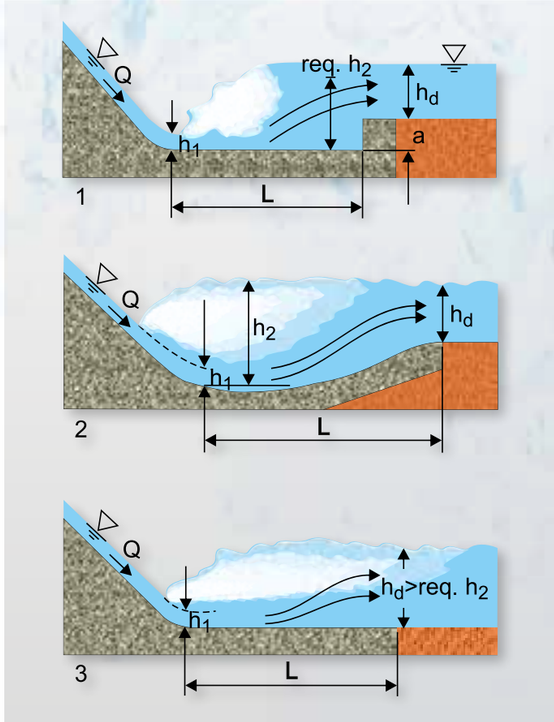

Stilling basin designs:

***1** basin with end sill, **2** trough-shaped, **3** flat;*

***a** positive step, **Q** discharge, **L** length of the stilling basin, **h_1** discharge depth at the beginning of the stilling basin, **h_2** sequent depth in the hydraulic jump, **h_d** discharge depth in downstream water **req. h_2** theoretically required discharge depth*

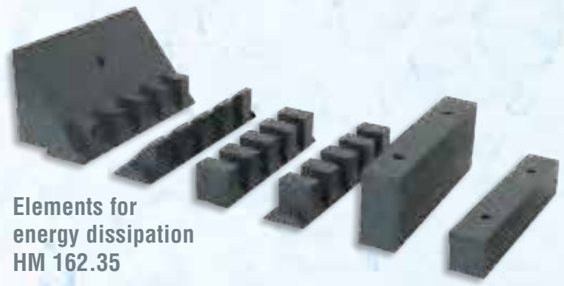

Elements for energy dissipation HM 162.35

Control structures

Control structures are common elements in flumes and are used for the following purposes:

- raising the water level, for example creating a sufficient navigable depth for ships, use of hydropower, erosion protection due to lower flow velocity
- controlling the discharge
- measuring the discharge

Typical control structures are **weirs** or **gates**. The difference between the two is whether the water flows over **(weir)** or under the structure **(gate)**. There are **fixed** or **movable** control structures. **Gates** are usually movable; they can regulate the water level and discharge. Possible movements are: lifting, retracting, rotating, tilting, rolling or combinations of these. **Weirs** can be constructed as a fixed or movable weir. Fixed weirs cannot regulate the water level, offering the advantage that they do not contain any moving parts prone to failure and requiring intensive maintenance. A special form of the fixed weir is the siphon weir (see page 90).

There is a flow transition from subcritical to supercritical discharge in the area around the control structure.

Real control structures consist of the following components:

- damming body (generates increase of water level); can be fixed, movable or a combination of both
- stilling basin: energy dissipation of the discharge
- bed pitching in the upstream and downstream water, structural connection (weir sidewalls)
- structures for ecological consistency

Overfall condition at the weir

There may be two **overfall conditions** present at a weir. In the case of **free overfall**, the upstream water remains unaffected by the downstream water. There is critical discharge at the weir crest. The weir crest is above the downstream water level. The weir is called a **free overfall weir**.

In **submerged overfall** the upstream water is affected by the downstream water. The weir acts like a **submerged weir** and in many cases is completely under water.

In the case of **free overfall**, weirs remove any connection between the water level in the upstream water and the water level in the downstream water. As soon as the downstream water has accumulated to the weir crest to the extent that the critical depth over the crest is exceeded, there is **submerged overfall**.

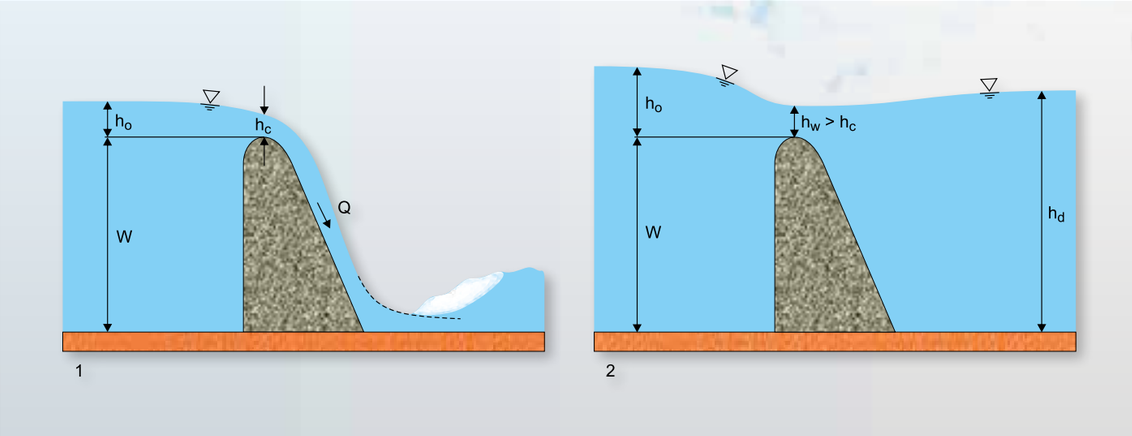

1 free overfall, 2 submerged overfall;
W height of weir, h_o weir head, h_c critical depth, Q discharge, h_d downstream water discharge depth, h_W discharge depth at weir crest

We can essentially distinguish between three different **types of weir:**

- **sharp-crested**
- **ogee-crested**/rounded (free-overfall weir)
- **broad-crested**

Sharp-crested weirs are preferred for measuring weirs. Ogee-crested weirs are often found being used as a retaining weir and flood overflow. Broad-crested weirs are often used as a sill and overflowed structure.

These three weir types are all considered in the GUNT experimental flumes.

Control structures: flow over fixed weirs

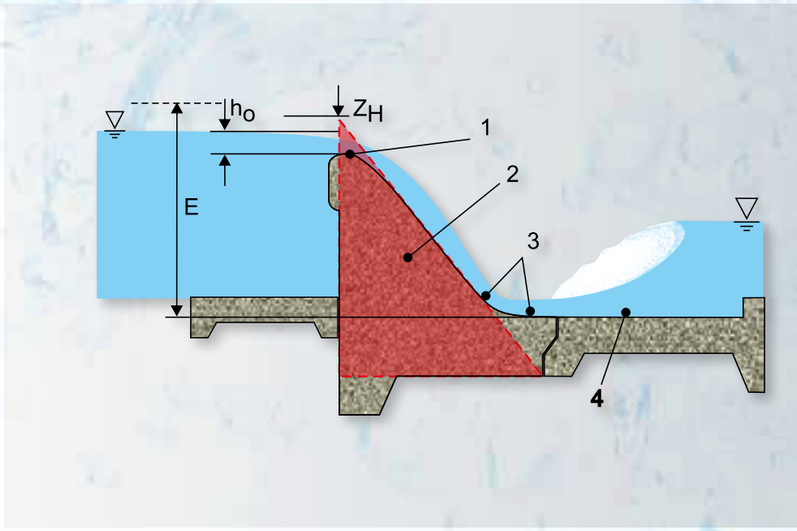

Simplified control structure:

ogee-crested weir with stilling basin

***1** weir crest,*
***2** weir body,*
***3** rounded weir outlet,*
***4** stilling basin;*

Z_H highest top water level,
h_o weir head,
E specific energy;

basic triangle of the weir as an aid to design

Fixed weirs are often used to retain a river. The weir itself consists of a massive damming body. The applied moment of the water pressure is compensated by the weight of the dam wall. For this reason, weirs are normally constructed so that the outer contours roughly correspond to a triangle. The weir downstream sides can be designed to improve flow, in order to achieve the largest possible discharge ***Q***. A hydraulically good discharge profile is the **WES profile**, which was developed at the **W**aterways **E**xperimental **S**tation in Vicksburg, Massachusetts, USA, by the US Army. The WES profile design does not assume a design discharge. Usually discharges smaller than the design discharge flow over the weir. The weir is therefore optimised for a slightly smaller discharge. For discharges that are smaller than or equal to the “chosen design discharge”, the discharge profile remains stable and nappe separations can be avoided. With the design discharge, small negative pressures occur at the downstream side of the weir, but these do not represent a danger to the weir.

Control structures: types of overfall at the weir

There are two types of overfall: **sharp-crested overfall** and **hydrodynamic overfall**. In both types of overfall, the overfall condition can be free or submerged.

In the case of **sharp-crested overfall**, it is important that the nappe is aerated so that it falls freely. Lack of aeration may result in disturbances and thus to reduced discharge.

In **hydrodynamic overfall** at a fixed weir, it is important that nappe separations (reduced discharge) and excessive negative pressures (risk of cavitation) are avoided.

Sharp-crested overfall at a measuring weir

Control structures: calculation of discharge at the weir

Calculating the discharge plays a key role in flow over control structures. To calculate the discharge we use the **Poleni equation**. For a weir with free overfall:

$$Q = \frac{2}{3}\,\mu b h_o \sqrt{2 g h_o}$$

μ is a factor that takes into account the weir geometry (see table), b is the weir's crest width, h_o the weir head.

In submerged overfall the equation is supplemented with a reducing factor that is taken from appropriate diagrams.

From the Bernoulli equation we can see that the specific energy E can be calculated from the kinetic energy (velocity of approaching flow v_u) and the discharge depth h_u in the upstream water. In many cases v_u is relatively small and is ignored.

In the GUNT experimental flumes, the models studied are approached normally, i.e. perpendicular to the flow direction. The weirs considered all belong to the group of fixed weirs.

In practice there are also lateral weirs, which are used as flood spillways. Lateral weirs are installed parallel to the flow direction. Lateral weirs are also fixed weirs.

Discharge coefficient μ for weirs with different shaped crests

	Design of the weir crest	μ
	broad, sharp-crested, horizontal	0,49 … 0,51
	broad, well-rounded edges, horizontal	0,50 … 0,55
	broad, fully-rounded weir crest, realised by a shifted weir flap	0,65 … 0,73
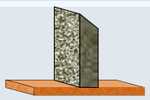	sharp-crested, nappe aerated	≈ 0,64
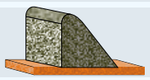	ogee-crested, vertical upstream and inclined downstream face	0,73 … 0,75
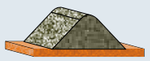	roof-shaped, rounded weir crest	0,75 … 0,79

Control structures: ogee-crested weirs

Fixed ogee-crested weirs are the preferred weir to be used as a retaining weir and flood overflow. They usually have a spillway for optimum flow, such as the WES profile. The downstream side of ogee-crested weirs from GUNT are designed as WES profiles.

On the ogee-crested weir HM 162.34 from GUNT the pressure distribution is measured along the weir downstream side and displayed directly on 8 tube manometers.

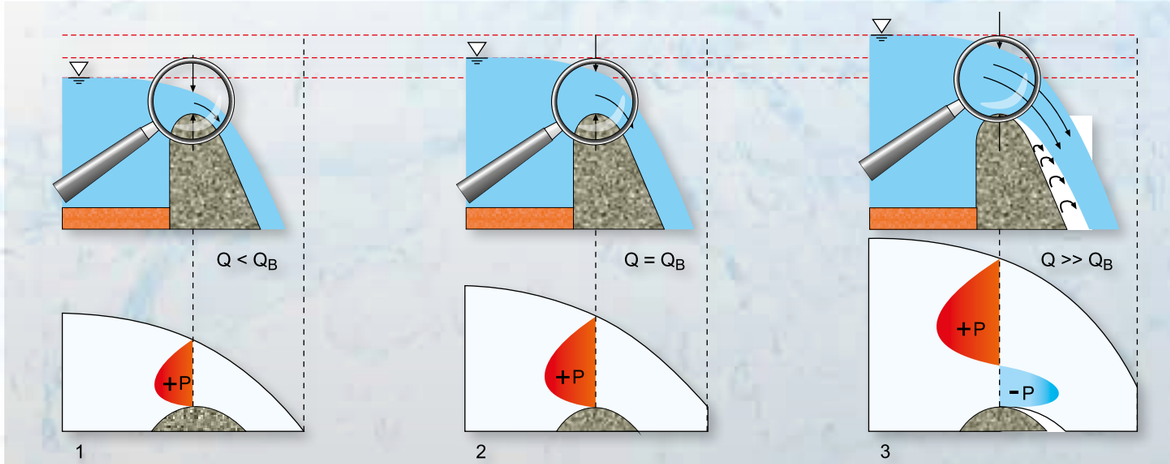

Hydrodynamic overfall on the ogee-crested weir, pressure distribution on the weir crest at different discharge:

***1** nappe lying on the crest, **2** weir downstream side roughly corresponds to the contour of the free nappe, **3** nappe lifts off where appropriate;*

***Q** discharge, Q_B design discharge*

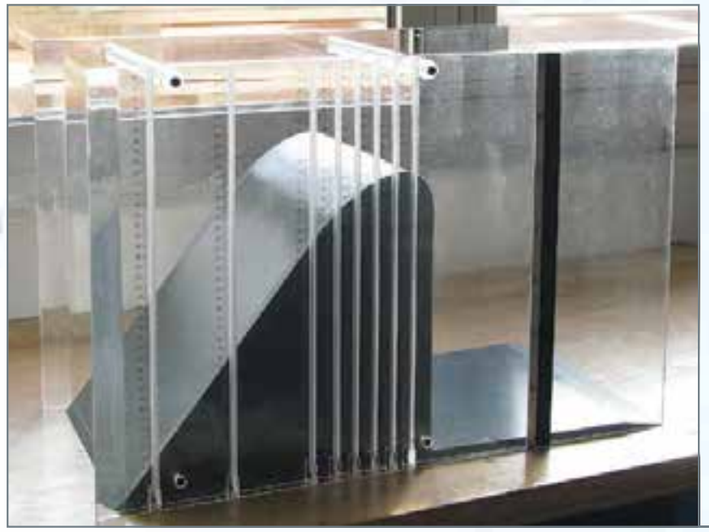

Pressure distribution on the ogee-crested weir HM 162.34

Control structures: sharp-crested weirs

There is also free and submerged overfall in the case of a sharp-crested weir. For the optimal discharge at a sharp-crested weir, it is important that the nappe is aerated. Ambient pressure prevails at the top and bottom of the aerated nappe.

Typical variables include the height of weir ***W***, the weir head h_o above the weir crest in the upstream water and the discharge depth h_d in the downstream water. Together with the width of the weir ***b*** these variables are entered into the Poleni equation (p. 86) to calculate the discharge. Some variables are included indirectly in coefficients or reducing factors.

HM 162.30
Plate Weirs

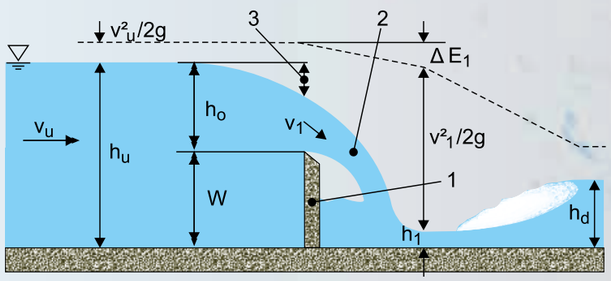

Aerated free overfall at a sharp-crested weir:

1 *weir,* ***2*** *nappe,* ***3*** *draw down;*

v_u *velocity in the upstream water,*
v_1 *velocity in the nappe,*
h_d *downstream water discharge depth,*
h_o *weir head,*
h_u *upstream water discharge depth,*
W *height of weir*

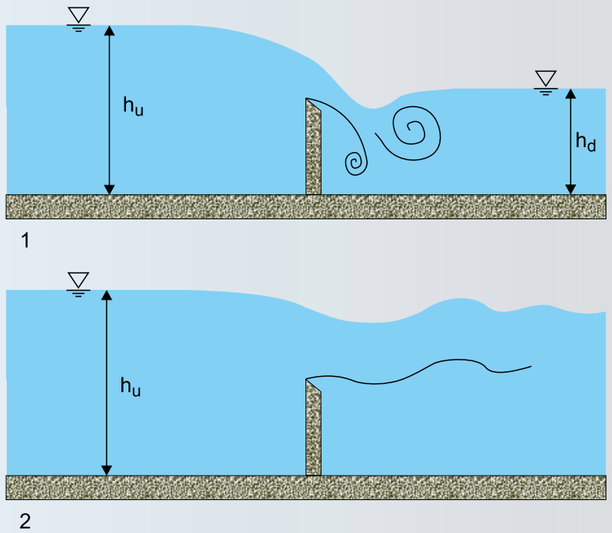

Submerged overfall:

1 *at a partially submerged sharp-crested weir,*

2 *at a fully submerged sharp-crested weir (undulating discharge)*

Control structures: broad-crested weirs

Broad-crested weirs are overflowed structures that are used in rivers where there is little variation in the discharge and only a rather small top water level is desired. They can also be the foundation for a movable control structure.

Broad-crested weirs are characterised by a short section of almost uniform discharge with critical depth occurs on the weir crest (see illustration). In this section, there is a hydrostatic pressure distribution. The streamlines extend almost horizontally. These conditions apply as long as the ratio of weir head to weir length h_o/L is between 0,08 and 0,5. Broad-crested weirs with these dimensions can also be used as a **measuring weir**.

Once h_o/L is <0,08, friction losses can no longer be ignored and the weir body is too long to be used as a measuring weir. At h_o/L > 0.5, i.e. short weir bodies, the streamlines do not run horizontally and the pressure distribution is not hydrostatic, so that we cannot use the calculation approaches presented in this brochure.

For ecological reasons, a broad-crested weir is rarely used as a sill in rivers. Instead, a ramp is built so that fish and other aquatic creatures can swim upstream.

GUNT experimental flumes facilitate the investigation of various broad-crested weirs and the their respective discharges ***Q***.

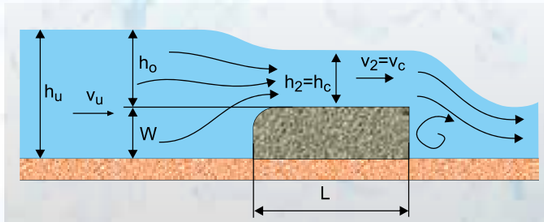

Broad-crested weir:

v_u *upstream water flow velocity,*
h_u *upstream water discharge depth,*
W *height of weir,*
h_c *critical depth,*
L *length of weir;*

arrows indicate streamlines

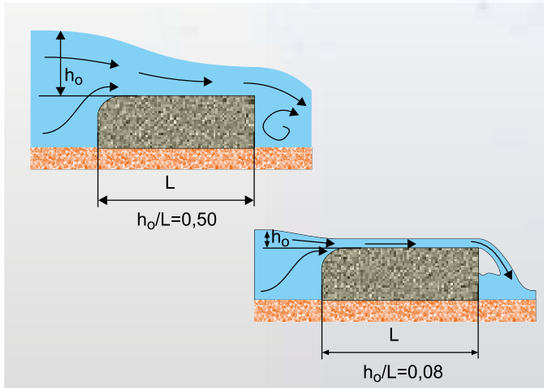

Sill HM 162.44

Crump weir HM 162.33

Broad-crested weir HM 162.31

Control structures: siphon weir

The siphon weir is a fixed weir. The illustrations below show the hydraulic principle of the syphone when used as a flood overflow.

When the water level of the storage lake rises just above the weir crest of the damming body, the siphon comes into play, soon resulting in free overfall. If there is a slight increase in water level, i.e. a slight increase in discharge, the nappe deflector directs the water jet to the siphon hood. This leads to an evacuation in the siphon duct, resulting in the discharge pressure in the pipe with full flow. This discharge pressure has a high discharge capacity, which only increases a little with rising water level.

If the water level of the storage lake falls again so that it is below the edge of the inlet lip, air is sucked into the siphon and the siphon vented. This abruptly stops the flow of water.

The discharge can be interrupted at any time by an additional device for venting. GUNT siphon weirs have air vents to allow a comparison of the function and discharge capacity of the siphon weir with and without venting.

Siphon weirs can only be adjusted to a limited extent and cannot be overloaded. In the past they were often incorporated as spillways in dams on the basis of their high specific discharge capacity.

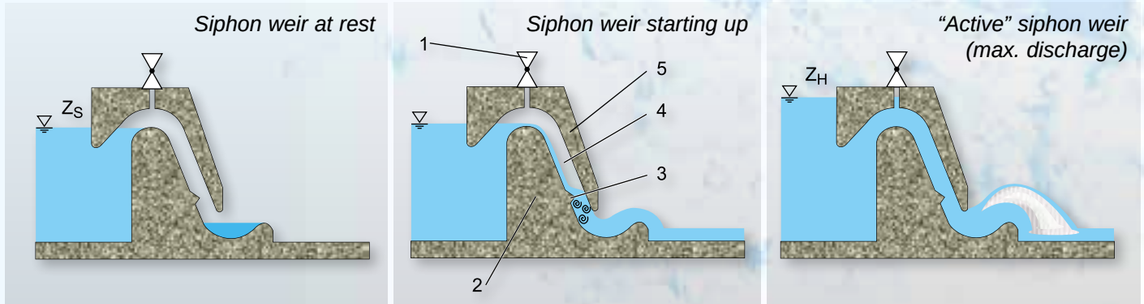

Principle of a siphon weir:

1 *air vent,* ***2*** *weir body,* ***3*** *nappe deflector,* ***4*** *siphon duct,* ***5*** *siphon hood;*
Z_S *top water level,* Z_H *highest water level*

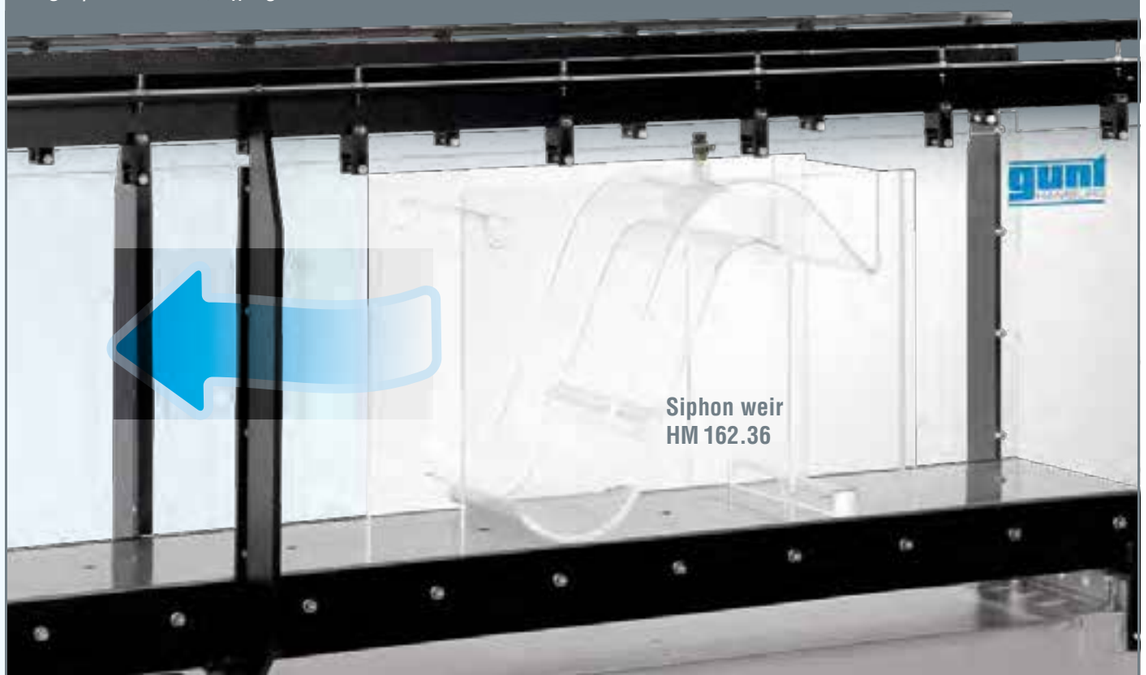

Control structures: flow under gates

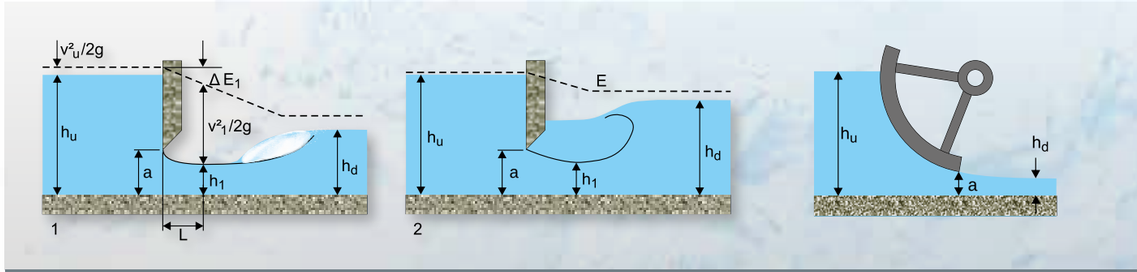

Discharge under a sluice gate:

1 *free discharge,* ***2*** *submerged discharge;*
h_u *upstream water discharge depth,* ***a*** *gate opening,*
h_d *downstream water discharge depth,* h_1 *minimum discharge depth,*
L *position of the minimum discharge depth,*
E *specific energy,* ΔE *loss of specific energy*

Discharge under a radial gate:

h_u *upstream water discharge depth,* ***a*** *gate opening,*
h_d *downstream water discharge depth*

Gates may be subject to either **free** or **submerged discharge**, in a similar way to flow over weirs. Discharge leads to jet contraction, also called "vena contracta" (minimum discharge depth h_1). **Free** discharge prevails as long as the discharge passes under the gate without disturbance and the downstream water does not form a backwater to the gate. In free discharge, there is supercritical discharge directly downstream of the gate.

In a similar way to the flow over weirs, the free discharge Q is calculated from Bernoulli's equation, the momentum equation and the continuity equation giving

$$Q = \mu b a \sqrt{2gh_u}$$

where μ = discharge coefficient, b = gate width, a = gate opening.

Gates are movable control structures, i.e. the gate opening a and thus the discharge Q is altered and adjusted to actual needs. In practice, there are therefore characteristic diagrams which show the discharge Q (upstream and downstream water discharge depth h_u and h_d and gate opening a are given).

One type of gate commonly used in practice is the circular radial gate used to control discharge. It can be rotated about a bearing point. The radial gate is often placed on the weir crest of a control structure. Flow does not just go under the radial gate, but can also go over into a flume (radial weir).

GUNT experimental flumes allow the installation and investigation of a flat sluice gate and a radial gate.

Sluice gate HM 162.29

Radial gate HM 162.40

Culvert

Culverts are crossing structures in running waters and allow the passage of water. They may be pipes that are laid under a road, allowing the flume to cross.

The culvert may be flowed through partially or in full, depending on the discharge occurring. A partially filled culvert with free surface is treated in the same way as an open channel. By contrast, a full flow through culvert and a culvert in which the inlet is completely submerged are classed as control structures. These result in a limiting of the discharge. There may also be a combination of these two states, so that the culvert is sometimes fully flowed through and sometimes partially filled.

For various reasons, culverts are not ideal from a hydraulic point of view: they cause flow losses, are vulnerable to blockages (rubbish, sediment), can cause scour at the inlet and outlet and – in the event of floods – are often too small. Furthermore, they are difficult for aquatic creatures to pass through. Bridges are a much better alternative from a hydraulic point of view, but of course much more expensive.

Discharge type 1:
*full flow through culvert, upstream and downstream of culvert **Fr < 1**; h_u upstream water discharge depth, h_C critical depth, **Q** discharge, **d** culvert diameter, h_d downstream water discharge depth*

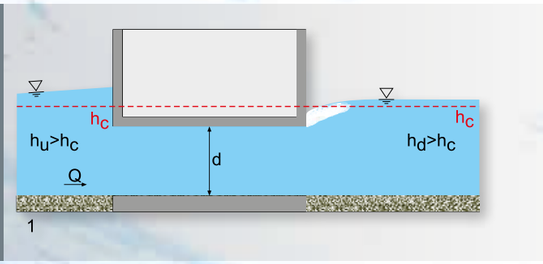

Discharge type 2:
*full flow through culvert, upstream of culvert **Fr < 1**, immediately downstream of culvert **Fr > 1***

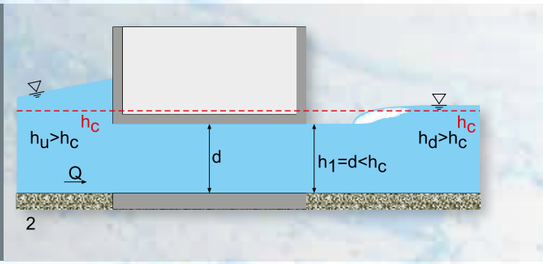

Discharge type 3:
*partially filled culvert, here with flow transition in the inlet and downstream of culvert; also possible: continuous discharge with **Fr < 1** or **Fr > 1***

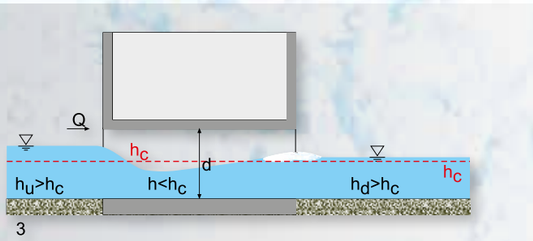

Discharge type 4:
submerged culvert inlet with discharge control; flow transition also possible in culvert, so that culvert is partially filled

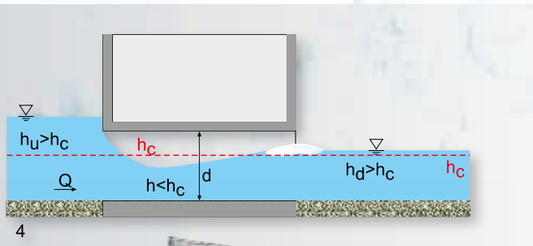

Culvert
HM 162.45

Local losses in flumes

Local losses result from changes in cross-section (constriction, sills, flow-measuring flumes), changes in direction and obstacles. Obstacles in flumes include piers for bridges or weirs. Piers constrict the flow cross-section possibly leading to back eddies or backwaters.

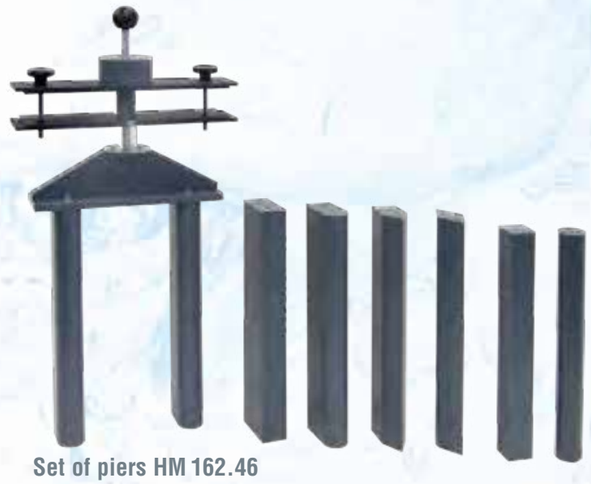

Set of piers HM 162.46

From a hydraulic point of view, there are four general cases for piers which class the discharge behaviour as without obstacles, i.e. as normal discharge. The four general cases are:

- subcritical discharge with little or considerable reduction of cross-section
- supercritical discharge with little or considerable reduction of cross-section

A non-negligible backwater and possibly a flow transition in front of the pier occurs when the specific energy ***E*** of the undisturbed discharge ***Q*** is less than the minimum required specific energy E_{min} that guarantees the complete discharge ***Q***. As the flow width b_{rest} of the flume through the obstacles decreases, E_{min} increases (see illustrations).

For rectangular flumes with a broad cross-section we get

$$E_{min} = 1{,}5\sqrt[3]{\frac{Q^2}{g b_{rest}^2}}$$

Piers with a rectangular profile, with a rounded profile and a tapering profile are studied in GUNT experimental flumes.

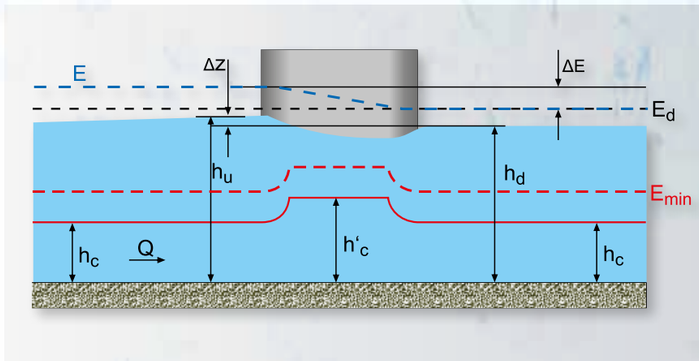

Discharge at the rounded pier without flow transition:

E *specific energy with pier,* ***Q*** *discharge,* E_d *undisturbed specific energy,* E_{min} *minimum required specific energy,* h_d *downstream water discharge depth (normal discharge),* h_u *upstream water discharge depth with pier,* h_C *undisturbed critical depth,* h'_C *critical depth with pier,* Δz *pier backwater,* ΔE *loss of specific energy*

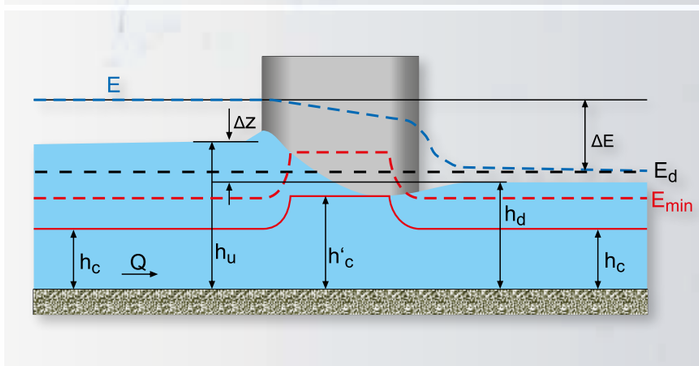

Discharge at the rounded pier with flow transition

Methods of discharge measurement

The two most common methods of determining the discharge of a flume are **flow-measuring flumes** and **measuring weirs**. In both methods, there is a fixed relationship between discharge depth ***h*** and discharge ***Q***.

Flow-measuring flumes

Venturi flumes are specially shaped flumes with defined lateral contraction, sometimes also with a shaped bottom. The constriction dams up the discharge ***Q***. The backed-up water ensures that subcritical discharge occurs in the flume. The constriction is where acceleration (including flow transition) from subcritical to supercritical discharge takes place. Critical discharge is present at the narrowest cross-section. This results in a hydraulic jump in the expansion section of the venturi flume. The discharge ***Q*** is calculated from the discharge depth h_u in the upstream water.

The GUNT venturi flumes have a flat bottom.

To prevent distortions to the measurement in the venturi flume, it is essential that discharge is free. The discharge depth h_u in the upstream water should not be affected by the downstream water.

Venturi flume HM 162.51

Parshall flume HM 162.55

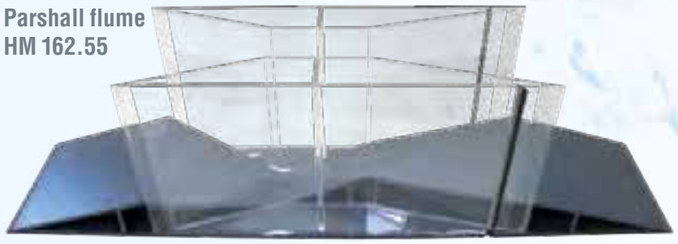

Parshall flumes are venturi flumes with a profiled bottom. The ratios of constriction and enlargement are defined. Parshall flumes are commercially available as a complete component including a discharge curve (discharge ***Q*** as a function of the discharge depth h_u in the upstream water). They are widely used in North America.

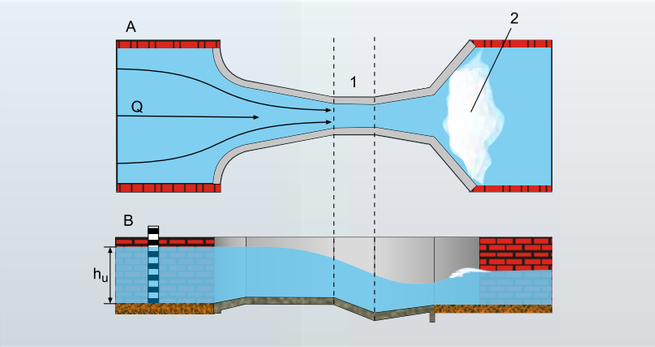

A plan view of venturi or Parshall flume,
B side view of a Parshall flume;
1 narrowest cross-section, 2 hydraulic jump;
h_u upstream water discharge depth, Q discharge

Trapezoidal flume HM 162.63

Trapezoidal flumes are another type of flow-measuring flumes. The flow cross-section is triangular or trapezoidal with smooth walls. In contrast to Parshall flumes, they often have a smaller pressure head loss for the same discharge and are more suitable for small discharges.

Flow-measuring flumes are mainly used in wastewater treatment plants because they are well suited for contaminated water. They can be easily maintained.

Measuring weirs

Measuring weirs are usually sharp-crested weirs. They have a simple design, require little space and are relatively easy to construct.

Measuring weirs are used in order to determine the discharge ***Q***. The quantity is measured by detecting the weir head h_o upstream of the weir. There must be a minimum distance of $3h_o$ between the measuring point and the weir. To convert the weir head h_o into the discharge ***Q***, there are approximation formulae that take into account the geometry of the measuring weir and the discharge coefficient according to Poleni.

Measuring weirs always have free overfall.

Sharp-crested weirs in the form of plate weirs exist with different geometries, such as:

- **rectangular weir according to Rehbock**
  Use at relatively uniform discharge of more than 50m³/h, but reduced accuracy in the lower part of the measuring range. The rectangular weir requires guaranteed aeration.
- **v-notch weir according to Thomson**
  Use with varying discharges (0,75...240m³/h); high measuring accuracy for smaller discharges.
- **trapezoidal weir according to Cipoletti**
  Use at relatively uniform discharges greater than 125m³/h.

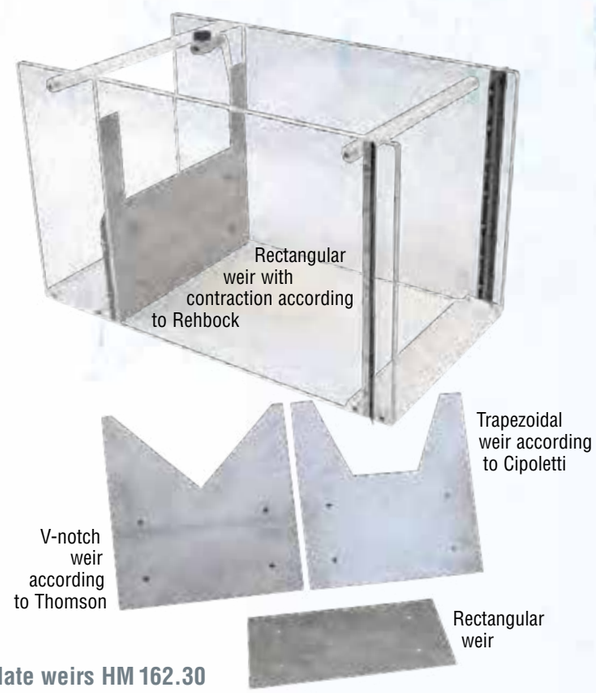

Plate weirs HM 162.30

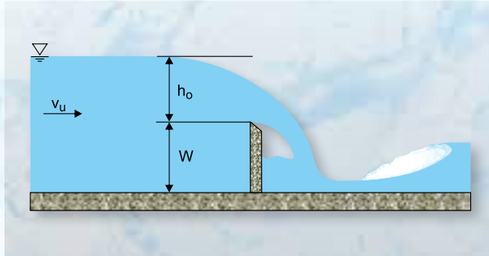

Aerated free overfall at the sharp-crested weir:

v_u velocity in the upstream water,
h_o weir head,
W height of weir

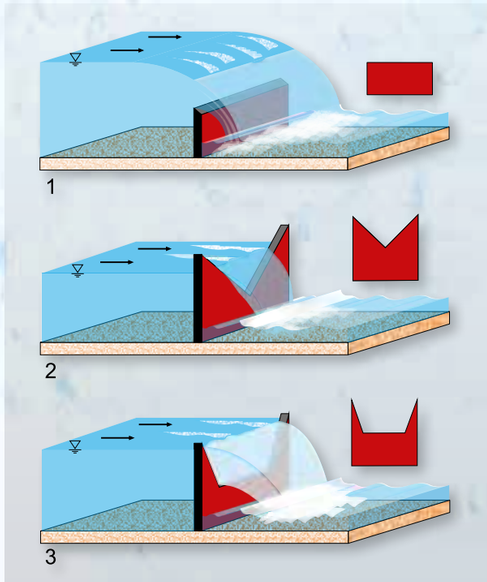

Flow over typical measuring weirs in side and plan view:

1 rectangular weir without contraction,
2 v-notch weir according to Thomson,
3 trapezoidal weir according to Cipoletti

Transient flow: flow-induced vibrations

Jetties or drilling platforms usually stand in the water on piles. Flowing water exerts forces on the part of the piles that is located under water, possibly causing vibrations. We distinguish between **vortex-induced** and **flow-induced** vibrations. It is important to deal with these forces and the stresses caused by them, since they can lead to component failure.

The vibrations are caused by the interaction between the moving fluid and the pile. For example, flow around a pile can lead to the formation of a Karman vortex street. The detachment of these vortices causes a change in the flow direction. In the worst case the vortex shedding frequency corresponds to the natural frequency of the pile.

The GUNT model HM 162.61 “Vibrating Piles” enables the observation of a single vibrating pile. Furthermore, there are two parallel piles that stand transverse to the direction of flow, and which are made to vibrate by the flow. The distance between the piles can be varied. If the distance is too small, there will be coupled vibrations between the two piles.

Vibrating piles HM 162.61

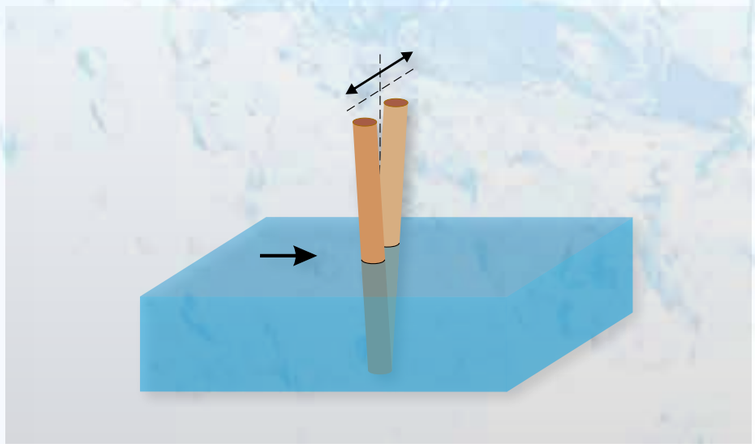

Vibrating pile

Sediment transport

In addition to the flowing water, almost all flumes include sediment transport that affects the flow behaviour. **Sediment transport** consists of **suspended-load transport** and **bed-load transport**. Suspended matter are solids that are suspended in the water and that have no contact with the bottom. Bed load on the other hand, consists of solids that are moved along the bottom. When studying the flow behaviour in flumes, it is bed-load transport that is the predominant component. Sediment that is deposited (siltation) or removed (erosion and/or scour) may, for example, change the flow cross-section or the water surface profiles. Sediment transport also results in a modified bed structure (formation of ripples or dunes, change of roughness).

In the case of normal discharge, in addition to the equations detailed above, it is also necessary to consider the transport balance on the control volume – is the same amount of sediment that leaves the control volume, also fed back in?

The GUNT experimental flumes use sand to demonstrate sediment transport. In addition to the sediment feeder at the inlet of the experimental flume, a sediment trap is integrated at the end of the experimental flume. Depending on the flow velocity, ripples can occur or a wandering dune may be observed. Together with other models, it is possible to observe siltation against a weir or scour formation at the stilling basin.

Essentially, the topic of sediment transport is studied in depth in several independent trainers, for example HM 140 or HM 168.

Sediment feeder HM 162.73

Sediment trap HM 162.72 at the outlet of HM 162

Sediment discharge on groynes

Siltation in the Rhine

Transient flow: waves

The free surface of the water is “deformed” by the wind (waves). In nature, there is a wide variety of waves (long or short wavelengths, breaking or smooth, etc.) Natural waves are irregular, for example a flat wave follows a high wave (amplitude). Aside from wind-induced waves, there are also surface waves caused by a disturbance, positive and negative surge waves and tsunami waves, which are caused by an increase in the water, such as during an earthquake.

Waves carry energy, but no mass. When a wave reaches shallow water, such as near the beach, it is slowed down. The wave trough is slowed more than the wave crest. Therefore, the wave crest overtakes the trough and the waves break.

The study of the formation and effect of waves is an important field in maritime navigation, coastal protection and in the design of offshore systems (wind farms, drilling platforms). In coastal protection in particular, it is a matter of reducing the destructive power of waves and the washing away of sediment.

The GUNT wave generator produces periodic, harmonic waves in the GUNT experimental flumes. For example, we can observe wave reflection at the end of a flume. Together with the various beach simulations, it is possible to observe and compare the behaviour of the same waves on different beds.

The run-up on piers, for example in a harbour basin or as part of an offshore system, can be observed with the HM 162.46 piers accessory.

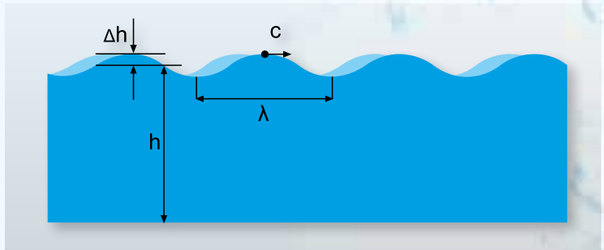

Periodic wave:

*Δ**h** amplitude, **h** average depth,*
***c** propagation velocity of the wave,*
***λ** wavelength*

Wave period: $T = \frac{1}{f} = \frac{\lambda}{c}$

	Shallow water	Deep water
Wavelength	$\lambda / h > 20$	$\lambda / h < 2$
Wave velocity	$c = \sqrt{gh}$	$c = \sqrt{\frac{g\lambda}{2\pi}}$
Particle path	linear	circular

Wave generator HM 162.41

Set of beaches HM 162.80 (plain beach, permeable beach and rough beach)

WE TAKE QUALITY SERIOUSLY

Our quality management system has been certified since 1998.

SGS-ICS ZERTIFIZIERTES QUALITÄTSMANAGEMENTSYSTEM
DIN EN ISO 9001
SGS

OPEN-CHANNEL FLOW IN THE LAB

HM 162.29 Sluice Gate

HM 162.40 Radial Gate

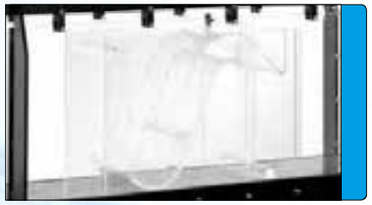
HM 162.36 Siphon Weir

HM 162.32 Ogee-Crested Weir with 2 Weir Outlets

HM 162.35 Elements for Energy Dissipation

HM 162.38 Rake

HM 162.31 Broad-Crested Weir

HM 162.33 Crump Weir

HM162.34 Ogee-Crested Weir with Pressure Measurement

HM 162.30 Set of Plate Weirs

HM 162.63 Trapezoidal Flume

HM 162.44 Sill

HM 162.46 Set of Piers

HM 162 with an experimental section of 7,5 m

HM 162.55 Parshall Flume

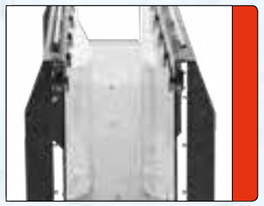
HM 162.51 Venturi Flume

HM 162.45 Culvert

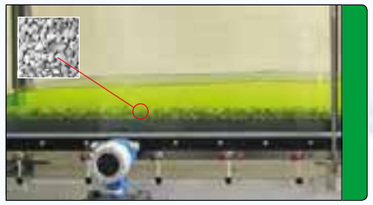
HM 162.77 Flume Bottom with Pebble Stones

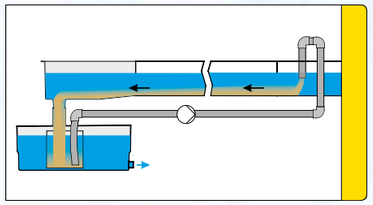
HM 162.71 Closed Sediment Circuit

HM 162.61 Vibrating Piles

HM 162.80 Set of Beaches

HM 162.41 Wave Generator

HM 162.72 Sediment Trap

HM 162.73 Sediment Feeder

A wide range of typical models allows the user to design a broad and individual programme of experiments with GUNT experimental flumes. The programme of experiments shown in this catalogue for HM 162 applies, in principle, for all GUNT experimental flumes.

The models of the other GUNT experimental flumes are similar.

- Control structures
- Changes in cross-section (losses, flow formulae)
- Discharge measurement
- Other experiments: including waves, sediment transport

The appropriate instrumentation for measuring the discharge depth and the flow velocity is also available as additional accessories.

AN OVERVIEW OF GUNT EXPERIMENTAL FLUMES

GUNT experimental flumes and their accessories open up a wide range of experiments and demonstrations on the topics of open-channel flow, running waters, hydraulic engineering and coastal protection. They form the expandable foundation for custom investigations and research work. Experimental flumes from GUNT have been successfully put to use around the world for many years.

For each of the experimental flumes, there is a variety of models for discharge control, such as weirs, sills, stilling basins, as well as wave generators, beach elements and bridge piers. Technical solutions for sediment feed and removal are also available.

In addition, we can also provide specially adapted instrumentation such as water level gauges, pitotstatic tubes, tube manometers and velocity meters.

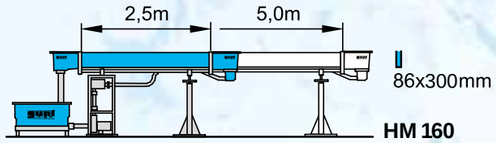

An almost identical experimental flume with the cross-section of 409 x 500 mm is also available with the device code HM 163.

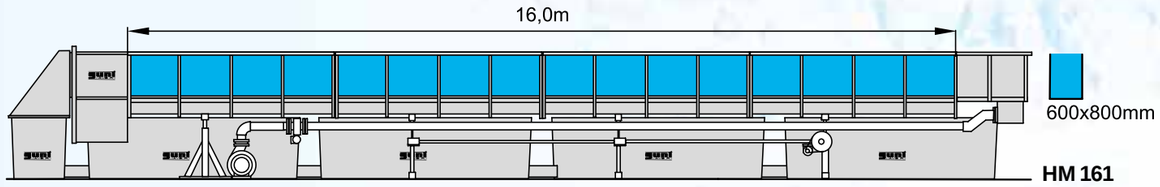

HM 160 (5m)

GUNT provides three experimental flumes with different cross-sections, depending on the purpose of use and the local conditions: HM 160 (86 x 300 mm), HM 162 (309 x 450 mm) and HM 161 (600 x 800 mm). Two of the experimental flumes have different lengths of experimental section to choose from: HM 160 with 2,5 m or 5 m and HM 162 with experimental sections of 5 m, 7,5 m, 10 m or 12,5 m. As a result, the length of the experimental section can be adjusted to the individual requirements of the laboratory. HM 161 is the largest GUNT experimental flume and has an experimental section that is 16 m long.

The HM 160 flume is perfectly suited as an introduction to the topic of "Open-Channel Flow" and the demonstration of many of the basic principles. The experimental flume even fits in lecture theatres, as it is relatively small and compact. HM 160 with an experimental section of 2,5 m requires an area of approximately 6 x 4 m, including sufficient space to observe the experiments. This allows the instructor to provide practical demonstrations of phenomena during lectures.

HM 161

HM 162 (12,5 m)

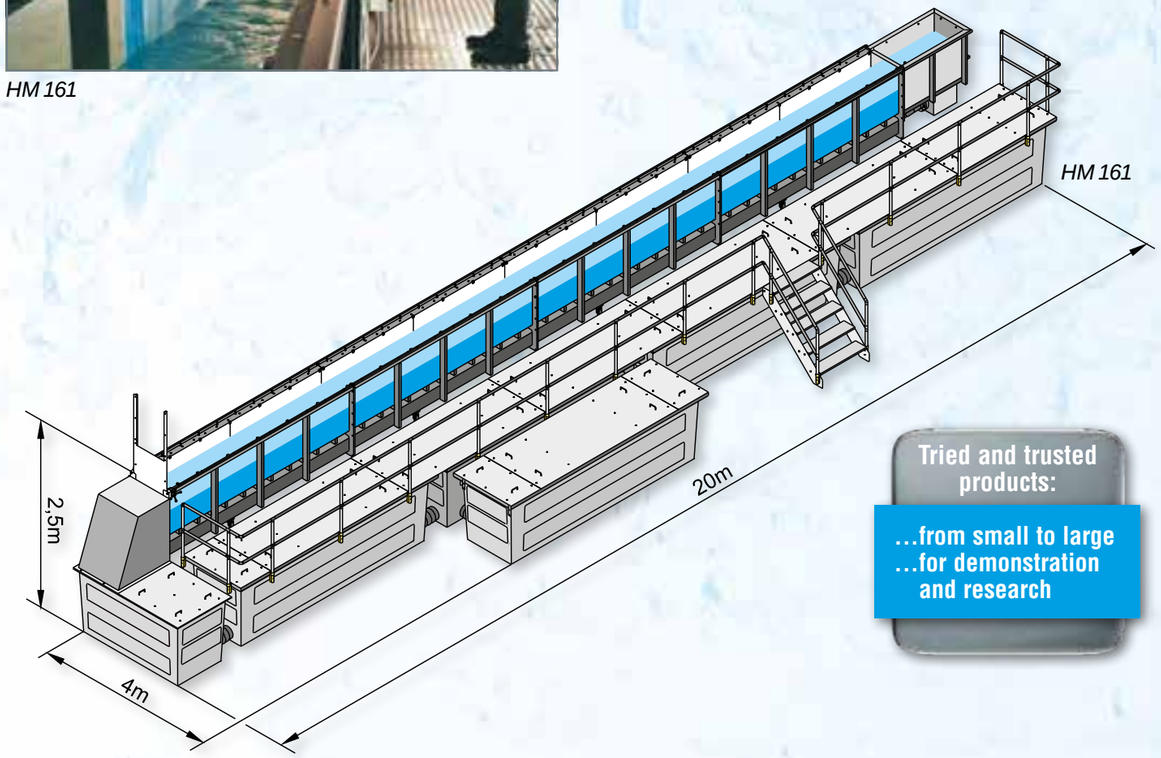

Tried and trusted products:

...from small to large
...for demonstration and research

The HM 162 experimental flume can be supplied in four different lengths. The "short" experimental flume, with an experimental section of 5 m, is particularly well suited for demonstrations and can easily be set up even in smaller laboratories.

As the length of the experimental section increases – and the inlet and outlet conditions improve – the phenomena become closer to those observed in reality. For example, with an experimental section of 12,5 m we can clearly see to what extent a damming body affects the upstream flow.

The largest GUNT experimental flume HM 161 – with a cross-section of 600 x 800 mm and a 16 m long experimental section – offers a large number of possibilities for your own research projects. The phenomena to be observed move beyond mere demonstration and become closer to reality. The HM 161 flume provides an initial impression of the natural force of water.

TECHNICAL DETAILS FOR GUNT EXPERIMENTAL FLUMES – THE CLOSED WATER CIRCUIT

THE WATER CIRCUIT

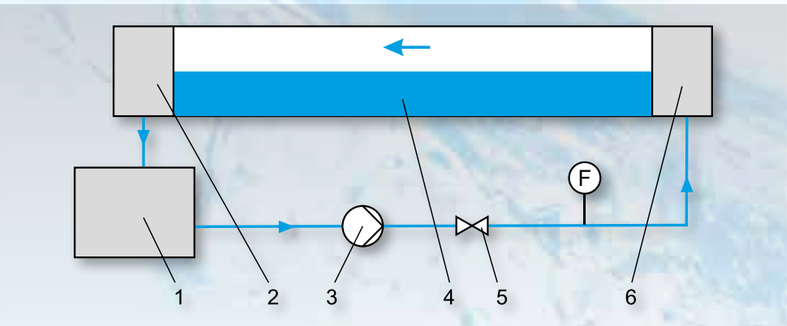

1 water tank,
2 outlet element,
3 pump,
4 experimental section,
5 control butterfly valve,
6 inlet element,
F flow meter

All experimental flumes can be operated independently of the laboratory water supply and have a closed water circuit with water tanks, pump and flow meter. To protect against overfilling of the experimental section, level switches turn off the pump when the maximum level in the inlet or outlet element is exceeded.

THE PUMP

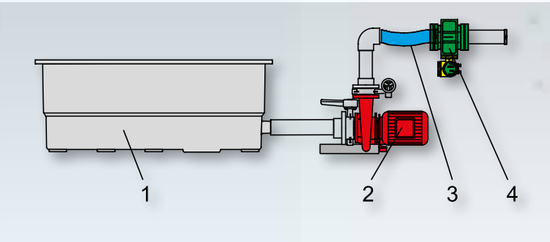

1 water tank,
2 pump,
3 hose,
4 flow meter

Pump (HM 162) with shut-off valve in the intake side (left) and control butterfly valve with manual actuation in the delivery side for adjusting the flow rate (above the pump). The pump's delivery line also contains the hose and the electromagnetic flow meter.

The centrifugal pump is separated from the experimental section in both experimental flumes HM 162 and HM 161 and is mounted on its own foundation. It is connected to the piping to the inlet element via a hose. This ensures that there is no transmission of vibrations between the experimental section and the pump. In the small experimental flume HM 160 the vibrations that occur are negligible, so the pump is integrated in one of the experimental flume's supports.

METHODS FOR ADJUSTING THE VOLUMETRIC FLOW IN THE INLET TO THE EXPERIMENTAL SECTION

All experimental flumes allow adjusting the volumetric flow. The pump is fitted with a control butterfly valve or a gate valve equipped that is operated either manually (HM 160, HM 162) or electrically (HM 161) until the desired flow rate is achieved. The flow rate in HM 160 is measured by a rotameter, while HM 161 and HM 162 are both equipped with an electromagnetic flow meter.

THE INLET ELEMENT

In all experimental flumes, the inlet element is designed for optimum flow so that the flow is less turbulent as it enters the experimental section.

The water enters from below through a flow straightener. A damping plate calms the water further. The damping plate floats on the water and is mounted on a guide.

In the plan view we can see that the inlet element has a nozzle-like contour.

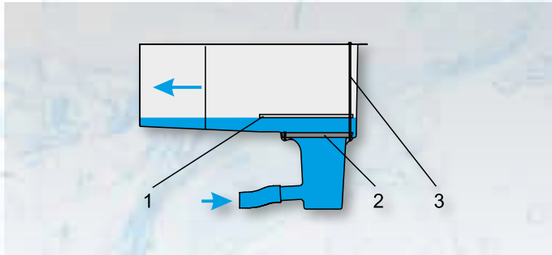

1 damping plate, 2 flow straightener,
3 guide

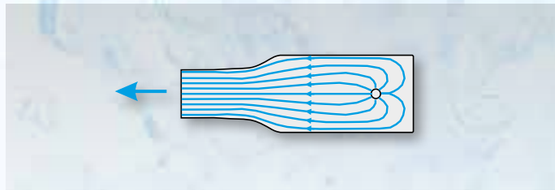

Plan view of the inlet element with streamlines

THE OUTLET ELEMENT

The outlet element of all experimental flumes contains a plate weir. A maximum of two elements can be removed from this weir, so that two damming heights are available to choose from. If both elements are removed, it corresponds to free discharge without a weir. Moreover, the weir is mounted to rotate around a fixed point and can thus be lowered. As such, any desired top water level can be set (see illustrations).

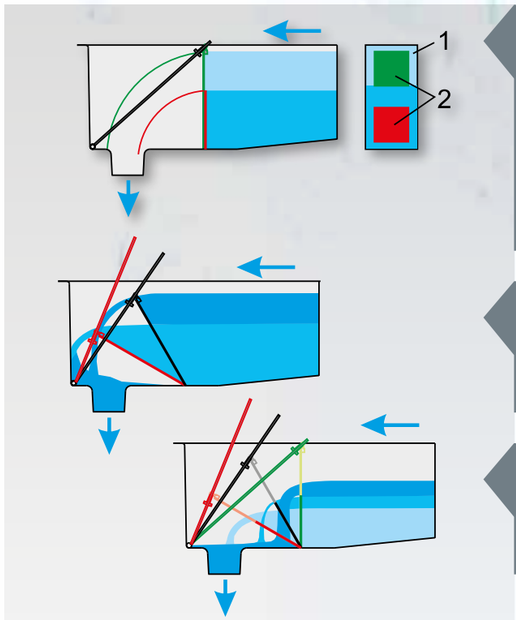

Principle of the plate weir with two damming heights:
both elements used,
only lower element used,
max. height of damming if upper element has been removed,
max. height of damming when 2 elements are used;

1 plate weir, 2 removable element

Plate weir with full damming height in different positions to adjust the top water level in the outlet of the experimental section.

Plate weir with medium damming height in different positions to adjust the top water level in the outlet of the experimental section.

TECHNICAL DETAILS FOR GUNT EXPERIMENTAL FLUMES – STRUCTURAL FEATURES

RIGIDITY AGAINST DEFORMATION

The experimental section of HM 162 is available in several lengths. The components used are essentially the same (modular design). In order to realise different lengths with the modular design, while maintaining inclination adjustment, the experimental flume is supported by an auxiliary carrier with two supports. In the version with long experimental section, the inevitable deformations are absorbed by the supports. The individual adjustability of the elements enables precise alignment of the experimental section.

The elements of the self-supporting experimental section in HM 161 are mounted on 4 supports, so that there is only ever a minimal deformation.

In HM 160 the stresses that occur in comparison to HM 162 are small, so that doubling the length of the experimental section does not pose a problem for the rigidity of the self-supporting experimental flume with two supports.

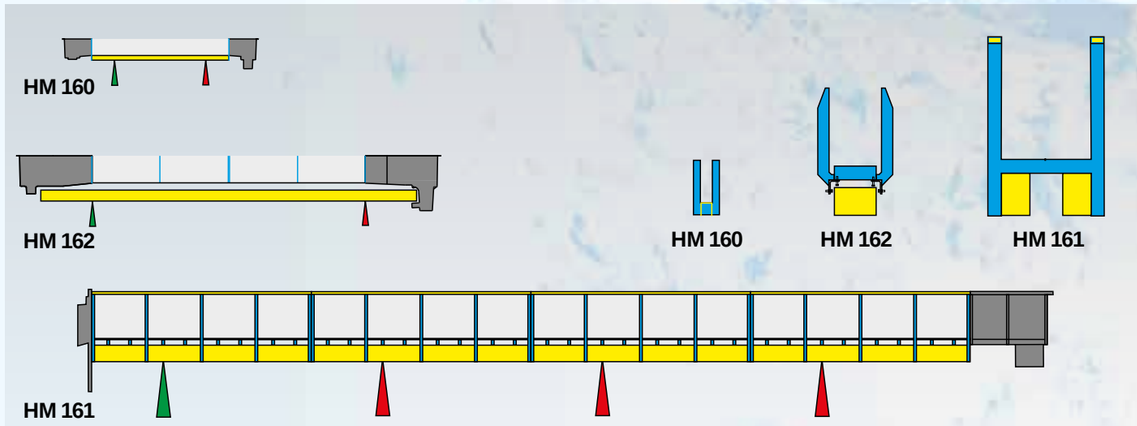

carrier (rigidity against bending), frame (rigidity against water pressure), fixed support, height-adjustable support (flume inclination adjustment), experimental section, inlet and outlet element

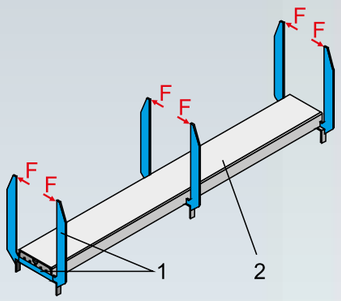

The rigidity of the elements of the experimental section against water pressure is ensured by the welded frame. The frames support the glass side walls.

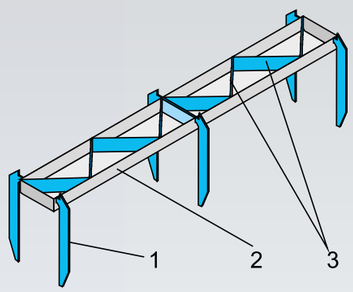

Bottom element of an element of the HM 162 experimental section, reinforced with diagonal ribs to increase stiffness against bending and torsion.

1 *welded frame,*
2 *bottom element of an element of the experimental section,*
3 *diagonal rib,*
F *water pressure force*

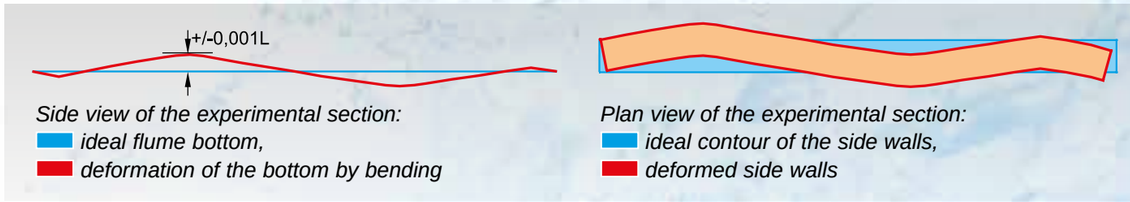

Side view of the experimental section:
ideal flume bottom,
deformation of the bottom by bending

Plan view of the experimental section:
ideal contour of the side walls,
deformed side walls

For all experimental flumes we can state that, with careful design, the maximum deviation from the ideal geometric shape for flatness and torsion is 0,1%. In the illustrations the deformations are shown greatly enlarged, e.g. 0,1% of the length ***L***. In the general tolerances for straightness and flatness according to ISO 2768, this satisfies the tolerance classes medium to fine. In this case the maximum deviation refers to the length of the experimental section.

INCLINATION ADJUSTMENT

All experimental flumes can be inclined, which means that the slope is adjustable. The slope range is -1/200...1/40. The current slope can be read directly on a scale (HM 160, HM 162) or a digital display (HM 161).

Inclination adjustment in HM 160 is manual and electrical in HM 161.

In HM 162 the inclination can be adjusted either manually or electrically. With an experimental section above 7,5 m we recommend electrical inclination adjustment.

Manual inclination adjustment in HM 162: left: scale, right: entire mechanism

Manual inclination adjustment in HM 160

Electrical inclination adjustment in HM 161

MATERIALS USED

In all experimental flumes, the bottom of the experimental section is made of stainless steel. Tempered glass is used for the side walls of the experimental section. It is scratch resistant, does not age and does not deform. The water tank, inlet and outlet elements are made of corrosion-resistant GRP (glass reinforced plastic) or steel. The piping is PVC. The models used in the experimental flumes consist of aluminium, stainless steel, PVC or Plexiglas.

GUNT EXPERIMENTAL FLUMES: INSTRUMENTATION

Instrument carriers for HM 162 and HM 161

The experimental flumes HM 161 and HM 162 extend above the side wall guide rails. An instrument carrier can be placed on the rails and moved. The different instruments are mounted on the instrument carrier, for example a level gauge or a pitotstatic tube. Using the carrier, the instruments can be moved to nearly every point of the flow. The carrier can be locked during the measurements with fixing devices. The position of the carrier along the experimental section is read on a scale (see photo). On the carrier itself is another scale, used to determine the position transverse to the direction of flow.

In the small experimental flume HM 160 no instrument carrier is necessary. The instruments are placed directly on the top of the experimental section and clamped in place.

Scale along the experimental section

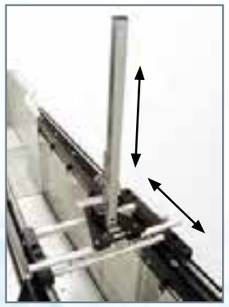

Instrument carrier with level gauge

Setup of the instrument carrier

Pitotstatic tube HM 162.50 with instrument carrier

Level gauge HM 162.52 with instrument carrier

Tube manometers HM 162.53

Flow velocity

GUNT offers two methods of measuring the flow rate in all experimental flumes: the traditional pitotstatic tube or a digital velocity meter. The pitotstatic tube HM 16x.50 measures the static pressure and the total pressure at any point of the flow. A digital pressure gauge displays the difference between the two pressures. The pressure difference corresponds to the dynamic pressure, from which the flow velocity can be calculated.

The core element of the velocity meter HM 16x.64 is an impeller that is rotated by the flow. The speed of the impeller is proportional to the flow velocity. The flow velocity is read directly from the digital display.

Velocity meter HM 16x.64

Discharge depth

To measure the discharge depth, the level gauge HM 16x.52 or HM 16x.91 with digital display is used. The tip of the probe is moved to the surface of the water from above.

Pressure measurement

All experimental flumes are equipped with pressure measuring points in the flume bottom. The pressure measuring points are evenly distributed over the length of the experimental section. To read these pressures, the pressure measuring points are connected to the optional manometer panel HM 16x.53 via hoses. This allows directly reading a profile of discharge depth over the entire length of the experimental section on the manometer panel.

Measuring methods in your laboratory

Of course, you can also use your own laboratory measuring methods to determine the flow velocity, such as PIV (Particle Image Velocimetry) or LDA (Laser Doppler Anemometry) and ultrasound to determine the discharge depth.

Example of a pressure measurement along the experimental section

A broad-crested weir (HM 162.31) and a sluice gate (HM 162.29) have been inserted in the 5 m long experimental section of HM 162. The elements of the experimental section of HM 162 each contain 10 pressure measuring points, which are uniformly distributed over the length of the 2,5 m element. The pressure at these measuring points is called the pressure head and corresponds to the discharge depth. The pressure heads are displayed on the manometer panel HM 162.53. When the experimental section is inclined, i.e. open-channel flow with a slope, it is more accurate to measure the discharge depth via the pressure head than via a level gauge.

The manometer panel HM 162.53 contains 10 tubes Depending on the length of the experimental section, we can either represent selected points on a panel or use multiple panels to show all pressures.

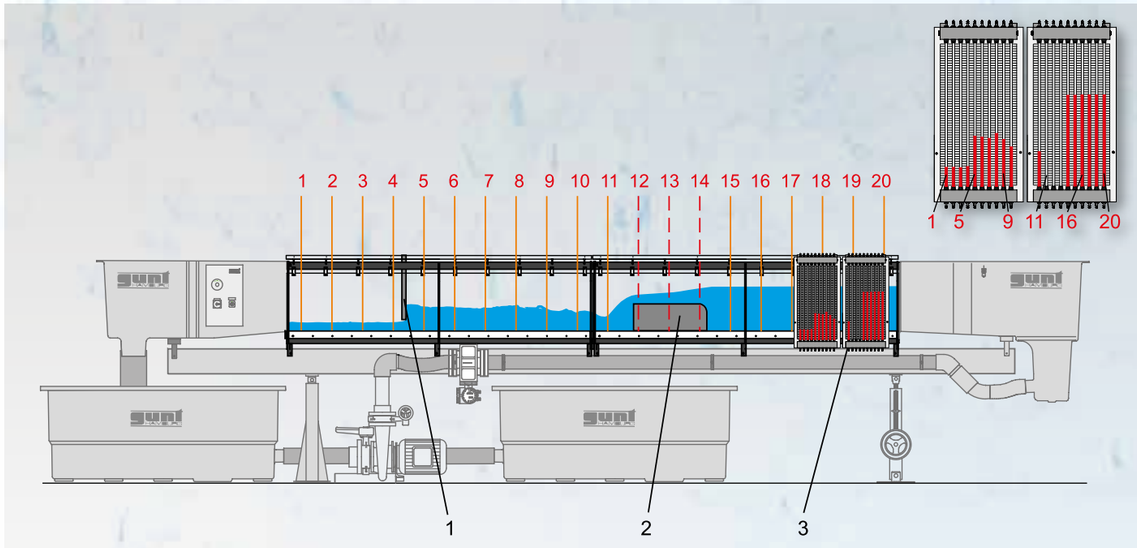

*HM 162 with sluice gate **1**, broad-crested weir **2** and manometer panel **3**.*
The manometer panels are enlarged so they can be clearly seen.

The elements of the experimental section in the experimental flume HM 160 contain 10 pressure measuring points over a length of 2,5 m. The manometer panel HM 160.53 contains 10 tubes.

In the experimental flume HM 161, forty-eight pressure measuring points are evenly distributed over the experimental section with 16 m length. The manometer panel HM 161.53 contains 20 tubes.

GUNT EXPERIMENTAL FLUMES: LABORATORY DESIGN

The following table lists the space requirements of all GUNT experimental flumes including the water tank.

GUNT will gladly undertake the precise laboratory planning for you to set up the experimental flumes.

A lifting device is recommended when placing larger models in the experimental sections of HM 162 and especially HM 161.

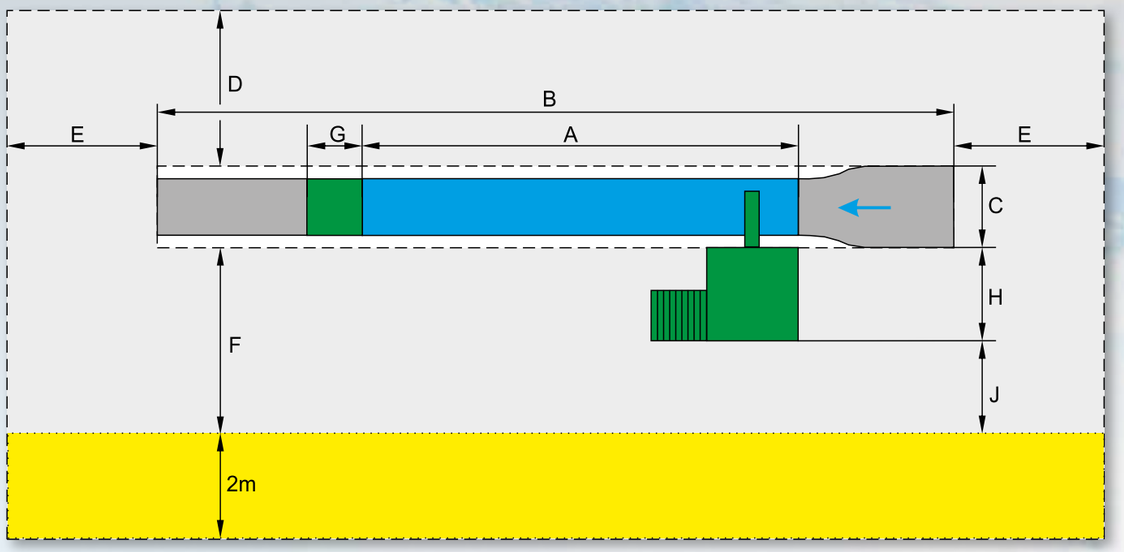

experimental section *sediment transport (sediment trap G, feeder H with steps)*
additional space required for installation

	A	B (excl. G)	C	D	E	F	G	H	J	Height B (excl. H)	Height B (incl. H)	Required room height
HM 160	2,5 m 5,0 m	3,6 m 6,1 m	0,6 m	1,0 m	1,5 m (min. 1 m)	2,0 m				1,35 m	1,80 m	2,3 m
HM 162	5,0 m 7,5 m 10,0 m 12,5 m	8,8 m 11,3 m 13,8 m 16,3 m	1,0 m 1,0 m 2,0 m 2,0 m	1,0 m	1,5 m (min. 1 m)	2,0 m	1,0 m	1,1 m	0,9 m	1,85 m	2,90 m	with sediment transport: min. 3,9 m
HM 161	16,0 m	20,0 m	4,0 m	2,0 m	1,5 m (min. 1 m)	1,0 m	1,0 m	in C incl.		2,50 m	3,30 m	with sediment transport: min. 4,5 m

An example of laboratory planning

This section provides some tips for planning a laboratory in which an experimental flume is going to be set up:

- the laboratory should be on the ground floor
- the floor must have sufficient load capacity
- the floor and the skirting area of the walls should be water-resistant
- the transportation routes to and within the laboratory must be spacious
- the water supply and drains must be big enough for larger amounts of water
- the two larger experimental flumes HM 162 and HM 161 require three-phase alternating current.

The drawing below shows the planning for a laboratory that contains the experimental flume HM 162 (10 m long experimental section), a few other GUNT units on fluid mechanics and workstations for the students.

In this case the models for HM 162 are stored on tables.

A small cabinet in the corner contains tools and can be used to store instruction manuals.

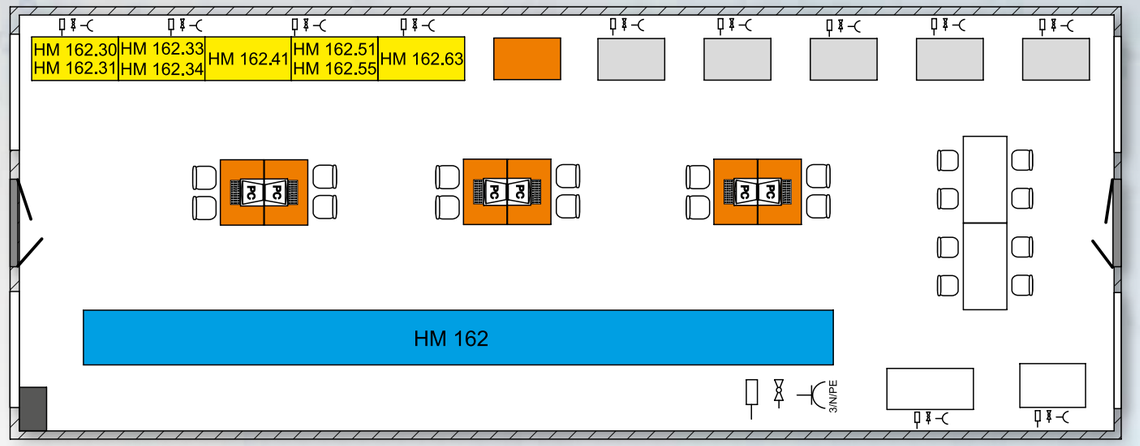

Dimensions of the laboratory, LxWxH: 20,00x7,60x4,00 m

water drain
water supply
power supply 230 V, 50 Hz, 1 phase
power supply 400 V, 50 Hz, 3 phases

HM 162 with 10 m experimental section, 13,00x1,00 m
table for storing models for HM 162, 160x80 cm
table, 120x80 cm
base module HM 150, 120x76 cm, with different modules
cabinet

HM 160 EXPERIMENTAL FLUME 86 x 300 mm

HM 160 is the smallest experimental flume in the GUNT range that can be used to give excellent demonstrations of all open-channel flow phenomena. Thanks to its small size and the closed water circuit, HM 160 can easily be set up and used in classrooms.

Used together with the comprehensive selection of additional accessories a wide range of topics within the field of open-channel flow can be demonstrated and investigated. These accessories include control structures, discharge measurement, losses due to changes in cross-section, waves and sediment transport. Additional accessories allow measuring the discharge depth and flow velocity.

The experimental flume HM 160 is available with two experimental sections of different lengths: 2,5 m or 5 m with an additional extension element HM 160.10 – see diagram.

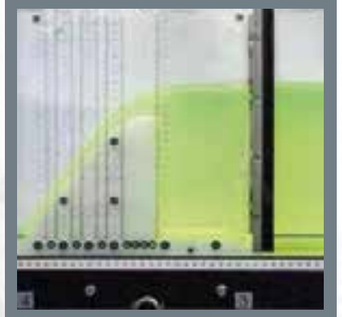

Ogee-crested weir with pressure measurement HM 160.34

Ogee-crested weir HM 160.32 and elements for energy dissipation HM 160.35

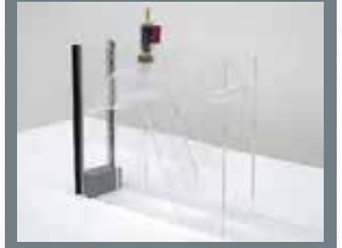

Siphon weir HM 160.36

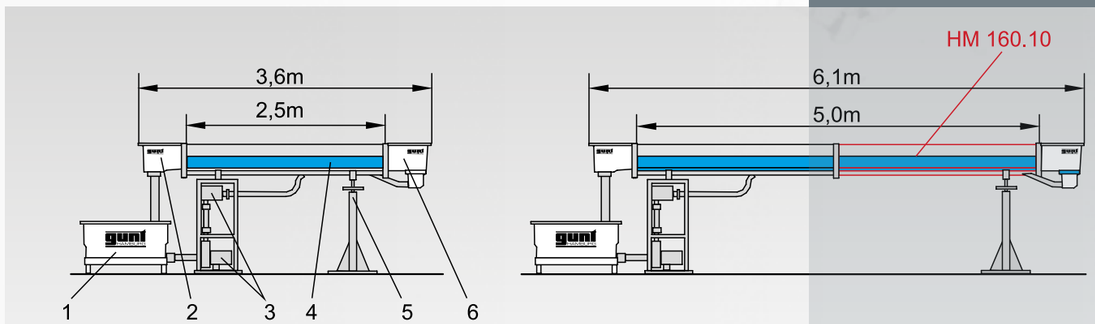

1 water tank, 2 outlet element,
3 pump with switch box,
4 experimental section,
5 height-adjustable support incl. flume inclination adjustment,
6 inlet element

Venturi flume HM 160.51

Training in Algeria

Training in Malaysia

Waves in the experimental flume

Sediment feeder HM 160.73

Wave generator HM 160.41

Plain beach HM 160.42

MODELS AVAILABLE AS ACCESSORIES

Control structures	**HM 160.29** Sluice Gate
	HM 160.40 Radial Gate
	HM 160.30 Set of Plate Weirs, 4 Types
	HM 160.31 Broad-Crested Weir
	HM 160.33 Crump Weir
	HM 160.34 Ogee-Crested Weir with Pressure Measurement
	HM 160.36 Siphon Weir
	HM 160.32 Ogee-Crested Weir with 2 Weir Outlets (expandable with **HM 160.35** Elements for Energy Dissipation)
Discharge measurement	**HM 160.51** Venturi Flume
Change in cross-section	**HM 160.77** Flume Bottom with Pebble Stones
	HM 160.44 Sill
	HM 160.45 Culvert
	HM 160.46 Set of Piers, 7 Profiles
Other	**HM 160.41** Wave Generator
	HM 160.42 Plain Beach
	HM 160.72 Sediment Trap **HM 160.73** Sediment Feeder
	HM 160.61 Vibrating Piles

MEASURING INSTRUMENTS AVAILABLE AS ACCESSORIES

HM 160.52 Level Gauge / **HM 160.91** Digital Level Gauge
HM 160.53 10 Tube Manometers
HM 160.50 Pitotstatic Tube
HM 160.64 Velocity Meter

HM 160 Experimental Flume 86x300mm

The illustration shows HM 160 together with the ogee-crested weir HM 160.32 and the level gauge HM 160.52.

*** Basic principles of open-channel flow**

*** Experimental section with transparent side walls, lengths of 2,5m and 5m available**

*** Homogeneous flow through carefully designed inlet element**

*** Models from all fields of hydraulic engineering available as accessories**

Technical Description

Hydraulic engineering is concerned with artificial waterways, the regulation of rivers and with barrages, amongst other things. By using experimental flumes in the laboratory, it is possible to teach the necessary basic principles.

The experimental flume HM 160 has a closed water circuit. The cross-section of the experimental section is 86x300mm. The experimental section is 2,5m long and can be increased to 5m with the extension element HM 160.10. The side walls of the experimental section are made of tempered glass, which allows excellent observation of the experiments. All components that come into contact with water are made of corrosion-resistant materials (stainless steel, glass reinforced plastic). The inlet element is designed so that the flow enters the experimental section with very little turbulence.

The inclination of the experimental flume can be finely adjusted to allow simulation of slope and to create a uniform flow at a constant discharge depth.

A wide selection of models, such as weirs, piers, flow-measuring flumes or a wave generator are available as accessories and ensure a comprehensive programme of experiments. Most models are quickly and safely bolted to the bottom of the experimental section.

The well-structured instructional material sets out the fundamentals and provides a step-by-step guide through the experiments.

Learning Objectives / Experiments

Together with optionally available models
- uniform and non-uniform discharge
- flow formulae
- flow transition (hydraulic jump)
- energy dissipation (hydraulic jump, stilling basin)
- flow over control structures
  - * weirs (sharp-crested, broad-crested, ogee-crested)
  - * discharge under gates
- flow-measuring flumes
- local losses due to obstacles
- transient flow: waves
- vibrating piles
- sediment transport

HM 160 Experimental Flume 86x300mm

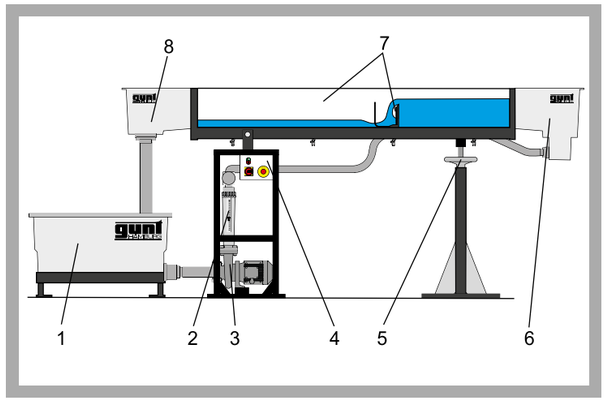

1 water tank, 2 flow meter, 3 pump, 4 switch box, 5 inclination adjustment, 6 inlet element, 7 experimental section with plate weir HM 160.30, 8 outlet element

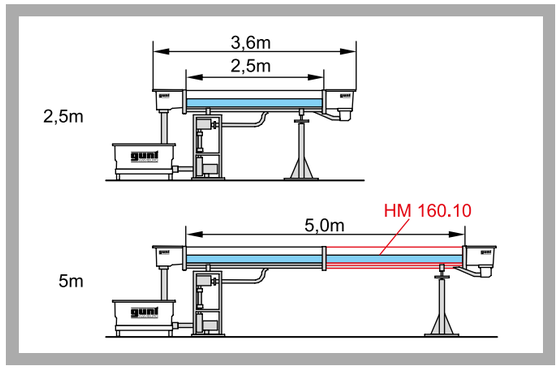

HM 160 with the two experimental sections of different lengths (2,5m or 5m). In the 5m version, an extension element HM 160.10 is required.

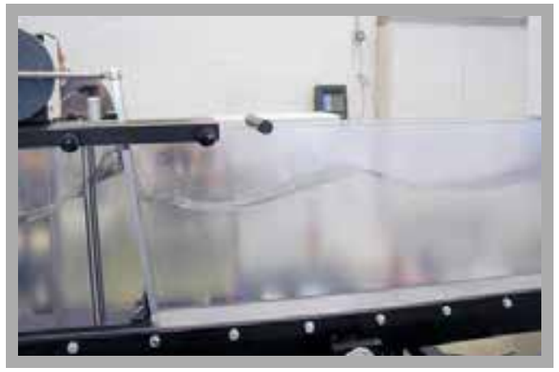

The wave generator HM 160.41 generates waves in the experimental flume.

Specification

[1] basic principles of open-channel flow
[2] experimental flume with experimental section, inlet and outlet element and closed water circuit
[3] length of the experimental section 2,5m or 5m (with extension element HM 160.10)
[4] smoothly adjustable inclination of the experimental section
[5] experimental section with 10 evenly spaced threaded holes on the bottom for installing models or for water level measurement using pressure
[6] side walls of the experimental section are made of tempered glass for excellent observation of the experiments
[7] all surfaces in contact with water are made of corrosion-resistant materials
[8] flow-optimised inlet element for low-turbulence entry into the experimental section
[9] closed water circuit with water tank, pump, flow rate sensor and manual flow adjustment
[10] models from all fields of hydraulic engineering available as accessories

Technical Data

Experimental section
- length: 2,5m or 5m (with 1x HM 160.10)
- flow cross-section WxH: 86x300mm
- inclination adjustment: -0,5...+3%

Tank: 280L
Pump
- power consumption: 1,02kW
- max. flow rate: 22,5m³/h
- max. head: 13,7m

Flow rate measuring range: 0...10m³/h

Dimensions and Weight

LxWxH: 4300x660x1350mm (experimental section 2,5m)
Weight: approx. 500kg

Required for Operation

230V, 50/60Hz, 1 phase or 120V, 60Hz/CSA, 1 phase

Scope of Delivery

1 experimental flume
1 set of instructional material

Order Details

070.16000 HM 160 Experimental Flume 86x300mm

G.U.N.T Gerätebau GmbH, Hanskampring 15-17, D-22885 Barsbüttel, Phone +49 (40) 67 08 54-0, Fax +49 (40) 67 08 54-42, E-mail sales@gunt.de, Web http://www.gunt.de
We reserve the right to modify our products without any notifications.

HM 162 EXPERIMENTAL FLUME 309 x 450 mm

We can also supply this experimental flume with a larger cross-section of 409 x 500 mm, under the code HM 163.

HM 162 – used worldwide by satisfied customers

The length of the experimental section is between 5 m and – with further HM 162.10 extension elements – a maximum of 12,5 m. The closed water circuit contains two water tanks and a powerful pump. Depending on the desired length, additional water tanks HM 162.20 are required (see drawings).

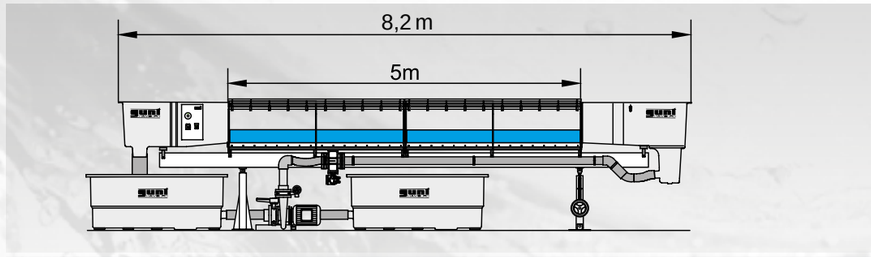

Experimental flume, length of the experimental section 5 m: HM 162

HM 162 with an experimental section of 5 m

Used together with the comprehensive selection of additional accessories a wide range of topics within the field of open-channel flow can be demonstrated and investigated. These accessories include control structures, discharge measurement, losses due to changes in cross-section, waves and sediment transport.

1 outlet element with switch cabinet,
2 pump,
3 water tank,
4 height-adjustable support incl. flume inclination adjustment,
5 inlet element

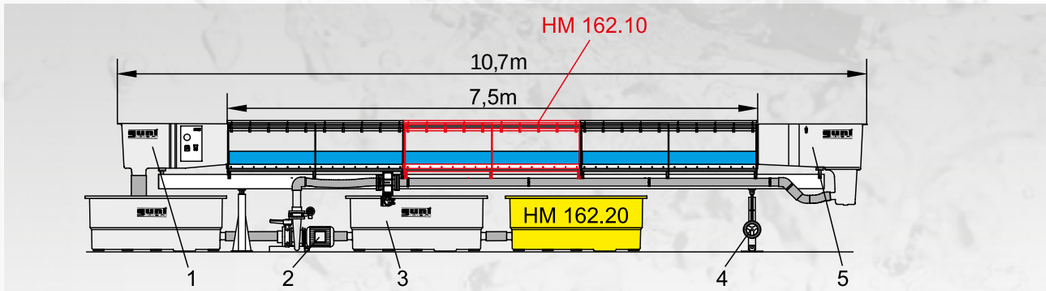

Experimental flume, length of the experimental section 7,5 m: HM 162 + 1x HM 162.10 + 1x HM 162.20

HM 162 with an experimental section of 7,5 m

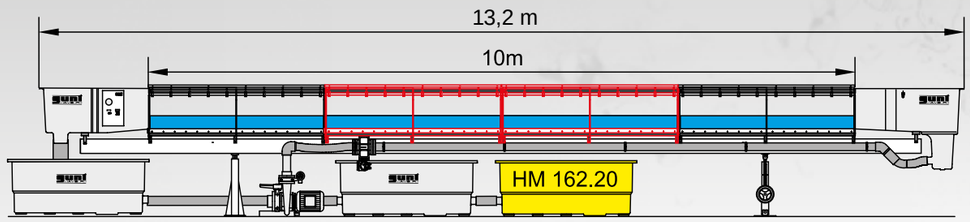

Experimental flume, length of the experimental section 10 m: HM 162 + 2x HM 162.10 + 1x HM 162.20

HM 162 with an experimental section of 10 m

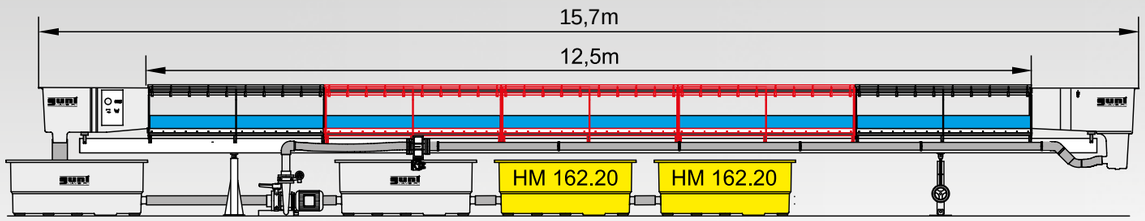

Experimental flume, length of the experimental section 12,5 m: HM 162 + 3x HM 162.10 + 2x HM 162.20

HM 162 with an experimental section of 12,5 m

HM 162 Experimental Flume 309x450mm

The illustration shows HM 162 (7,5m experimental section) with the wave generator HM 162.41 and the level gauge HM 162.52.

- **Experiments ranging from fundamental principles to research projects**
- **Experimental section with transparent side walls, lengths between 5m and 12,5m available**
- **Homogeneous flow through carefully designed inlet element**
- **Models from all fields of hydraulic engineering available as accessories**

Technical Description

Hydraulic engineering is a crucial part of engineering. How do we achieve the necessary river depth for ships? How does open-channel flow change during flooding? How far upstream do measures such as control structures have an effect? How can the discharge at barrages be calculated? By using experimental flumes in laboratories it is possible to teach the basic knowledge required to understand the answers to these questions and to develop possible solutions.

The experimental flume HM 162 with a closed water circuit has a cross-section of 309x450mm. The length of the experimental section is between 5m and – with further extension elements HM 162.10 – a maximum of 12,5m. The side walls of the experimental section are made of tempered glass, which allows excellent observation of the experiments. All components that come into contact with water are made of corrosion-resistant materials (stainless steel, glass reinforced plastic). The inlet element is designed so that the flow enters the experimental section with very little turbulence.

The inclination of the experimental flume can be finely adjusted to allow simulation of slope and to create a uniform flow at a constant discharge depth.

A wide selection of models, such as weirs, piers, flow-measuring flumes or a wave generator are available as accessories and ensure a comprehensive programme of experiments. Most models are quickly and safely bolted to the bottom of the experimental section.

The well-structured instructional material sets out the fundamentals and provides a step-by-step guide through the experiments.

Learning Objectives / Experiments

Together with optionally available models
- uniform and non-uniform discharge
- flow formulae
- flow transition (hydraulic jump)
- energy dissipation (hydraulic jump, stilling basin)
- flow over control structures
  * weirs (sharp-crested, broad-crested, ogee-crested)
  * discharge under gates
- flow-measuring flumes
- local losses due to obstacles
- transient flow: waves
- vibrating piles
- sediment transport

HM 162 Experimental Flume 309x450mm

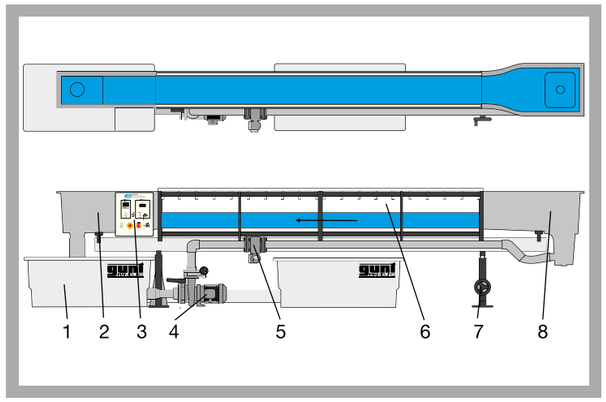

1 water tank, 2 outlet element, 3 switch box, 4 pump, 5 flow rate sensor, 6 experimental section, 7 inclination adjustment, 8 inlet element

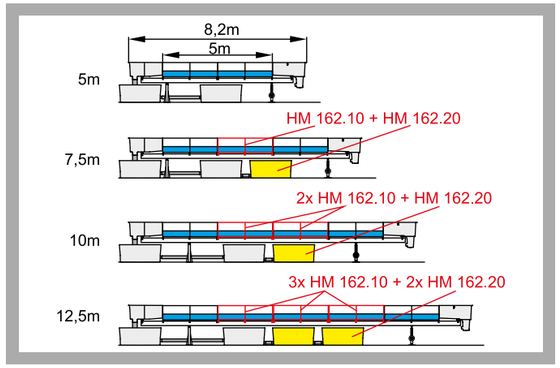

HM 162 with experimental sections of different lengths (5...12,5m). Depending on the desired length, additional extension elements HM 162.10 and water tanks HM 162.20 are required.

Overfall at ogee-crested weir with ski jump spillway HM 162.32.

Specification

[1] basic principles of open-channel flow
[2] experimental flume with experimental section, inlet and outlet element and closed water circuit
[3] length of the experimental section 5m, up to 12,5m possible with additional extension elements HM 162.10
[4] smoothly adjustable inclination of the experimental section
[5] experimental section with 20 evenly spaced threaded holes on the bottom for installing models or for water level measurement using pressure
[6] side walls of the experimental section are made of tempered glass for excellent observation of the experiments
[7] experimental section with guide rails for the optionally available instrument carrier HM 162.59
[8] all surfaces in contact with water are made of corrosion-resistant materials
[9] flow-optimised inlet element for low-turbulence entry into the experimental section
[10] closed water circuit with 2 water tanks, pump and flow control
[11] models from all fields of hydraulic engineering available as accessories

Technical Data

Experimental section
- possible lengths: 5m-7,5m-10m-12,5m
- flow cross-section WxH: 309x450mm
- inclination adjustment: -0,5...+2,5%

2 tanks
- made of GRP
- 1100L each

Pump
- power consumption: 4kW
- max. flow rate: 132m³/h
- max. head: 16,1m
- speed: 1450min^{-1}

Flow rate measuring range: 5,4...130m³/h

Dimensions and Weight

LxWxH: 8750x1000x2100mm (experimental section 5m)
Weight: approx. 1500kg

Required for Operation

400V, 50/60Hz, 3 phases or 230V, 60Hz/CSA, 3 phases

Scope of Delivery

1 experimental flume
1 set of tools
1 set of instructional material

Order Details

070.16200 HM 162 Experimental Flume 309x450mm

G.U.N.T Gerätebau GmbH, Hanskampring 15-17, D-22885 Barsbüttel, Phone +49 (40) 67 08 54-0, Fax +49 (40) 67 08 54-42, E-mail sales@gunt.de, Web http://www.gunt.de
We reserve the right to modify our products without any notifications.

HM 162 *Experimental Flume 309x450mm*

Available accessories and options:

Product No.	Order Text
CONTROL STRUCTURES	
070.16229	HM 162.29 Sluice Gate
070.16240	HM 162.40 Radial Gate
070.16230	HM 162.30 Set of Plate Weirs, 4 Types
070.16231	HM 162.31 Broad-Crested Weir
070.16233	HM 162.33 Crump Weir
070.16236	HM 162.36 Siphon Weir
070.16238	HM 162.38 Rake
070.16234	HM 162.34 Ogee-Crested Weir with Pressure Measurement
070.16232	HM 162.32 Ogee-Crested Weir with 2 Spillways
optionally available accessory for HM 162.32	
070.16235	HM 162.35 Elements for Energy Dissipation
CHANGE IN CROSS-SECTION	
070.16244	HM 162.44 Sill
070.16245	HM 162.45 Culvert
070.16246	HM 162.46 Set of Piers, 7 Profiles
070.16277	HM 162.77 Flume Bottom with Pebble Stones
FLOW-MEASURING FLUMES	
070.16251	HM 162.51 Venturi Flume
070.16255	HM 162.55 Parshall Flume
070.16263	HM 162.63 Trapezoidal Flume
OTHER EXPERIMENTS	
070.16261	HM 162.61 Vibrating Piles
070.16271	HM 162.71 Closed Sediment Circuit
or	
070.16272	HM 162.72 Sediment Trap
optionally available accessory for HM 162.72	
070.16273	HM 162.73 Sediment Feeder
070.16241	HM 162.41 Wave Generator
070.16280	HM 162.80 Set of Beaches
MEASURING INSTRUMENTS	
070.16252	HM 162.52 Level Gauge
or	
070.16291	HM 162.91 Digital Level Gauge
070.16264	HM 162.64 Velocity Meter
or	
070.16250	HM 162.50 Pitotstatic Tube
070.16253	HM 162.53 10 Tube Manometers
or	
070.16213	HM 162.13 Electronic Pressure Measurement, 10x 0...50mbar
Required accessory for HM 162.50, HM 162.52, HM 162.64 and HM 162.91	
070.16259	HM 162.59 Instrument Carrier
OTHER ACCESSORIES	
070.16212	HM 162.12 System for Data Acquistion and Automation
070.16257	HM 162.57 Electrical Inclination Adjustment (recommended for experimental sections of 7,5m or longer)
Required for experimental sections of 7,5m or longer	
070.16210	HM 162.10 Extension Element of the Experimental Flume
070.16220	HM 162.20 Water Tank

G.U.N.T Gerätebau GmbH, Hanskampring 15-17, D-22885 Barsbüttel, Phone +49 (40) 67 08 54-0, Fax +49 (40) 67 08 54-42, E-mail sales@gunt.de, Web http://www.gunt.de
We reserve the right to modify our products without any notifications.

INSTRUCTIONAL MATERIAL AND SOFTWARE

GUNT's policy is:
High-quality hardware and clearly laid-out instructional materials ensure the teaching and learning success of an experimental unit. The core elements of the instructional material provided to accompany the units are reference experiments conducted by ourselves. The description of the experiment incorporates the detailed setup, through to interpretation of the results obtained. A group of experienced engineers devise and maintain the accompanying instructional material.

Our software – in our context meaning computerised data acquisition programs – always comes with comprehensive online help to explain the features offered the detailed use of the program. GUNT software is developed and written in-house by another group of experienced engineers.

HM 162 EXPERIMENTAL FLUME: A FEW IMPRESSIONS

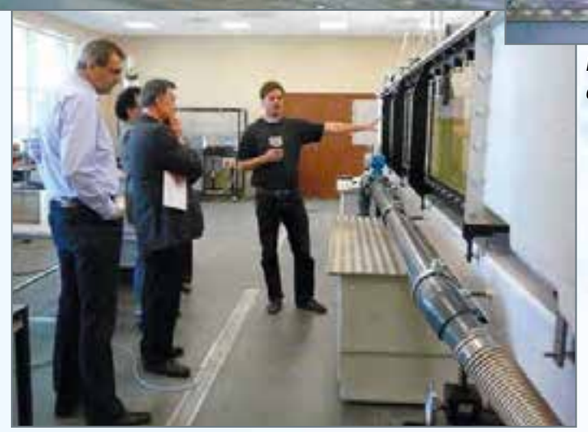

Demonstrations for the customer

Operating the sluice gate

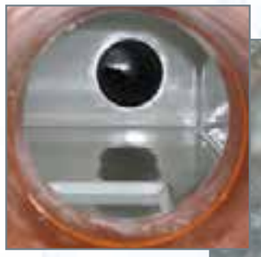

Glimpse into the water tank

Siphon weir in action

Culvert

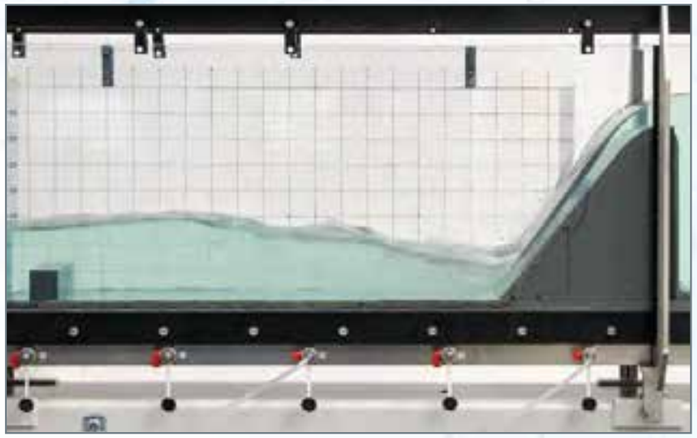

Ogee-crested weir with a sill

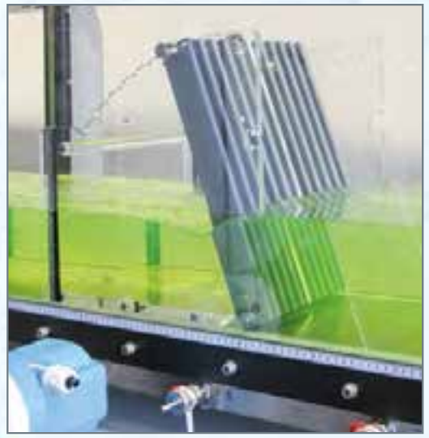

Rake

Aerated plate weir (side view)

Radial Gate

HM 161 EXPERIMENTAL FLUME 600 x 800 mm

HM 161 has an experimental section of 16 m and a cross-section of 600 x 800 mm, making it the largest experimental flume in the GUNT range. Thanks to its large size, HM 161 is ideal for your own research projects. The results of experiments are very close to what happens in nature. The water forces occurring in this experimental flume are impressive. Used together with the comprehensive selection of additional accessories a wide range of topics within the field of open-channel flow can be demonstrated and investigated. These accessories include control structures, discharge measurement, losses due to changes in cross-section, waves and sediment transport. Additional accessories allow measuring the discharge depth and flow velocity.

Front view with gallery

Rear view with jacking supports

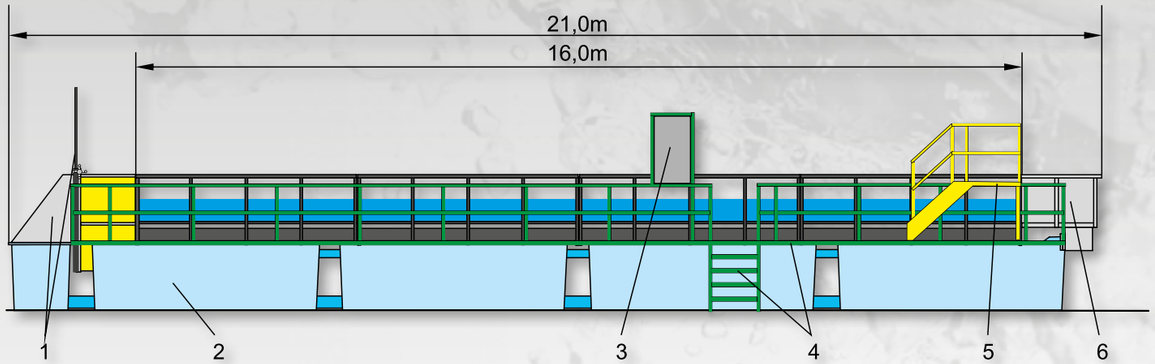

*Front view: **1** outlet element with gate, **2** water tank, **3** switch cabinet, **4** gallery, **5** platform for sediment feeder, **6** inlet element*

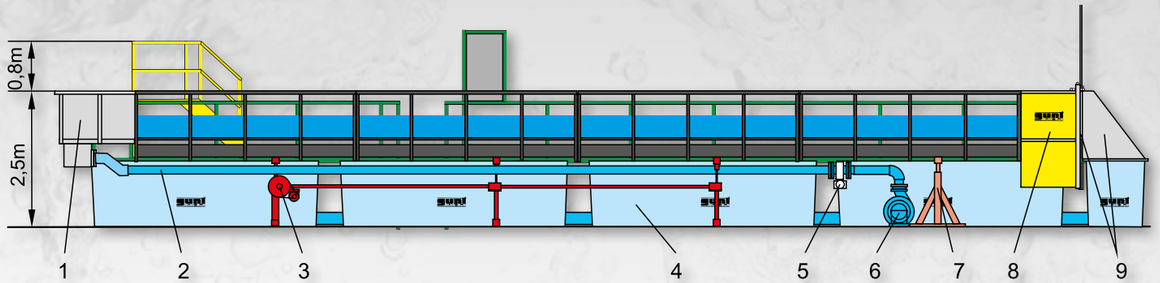

*Rear view: **1** inlet element, **2** piping, **3** motorised jacking support (flume inclination adjustment), **4** water tank, **5** flow meter, **6** pump, **7** fixed support, **8** sediment trap, **9** outlet element with gate*

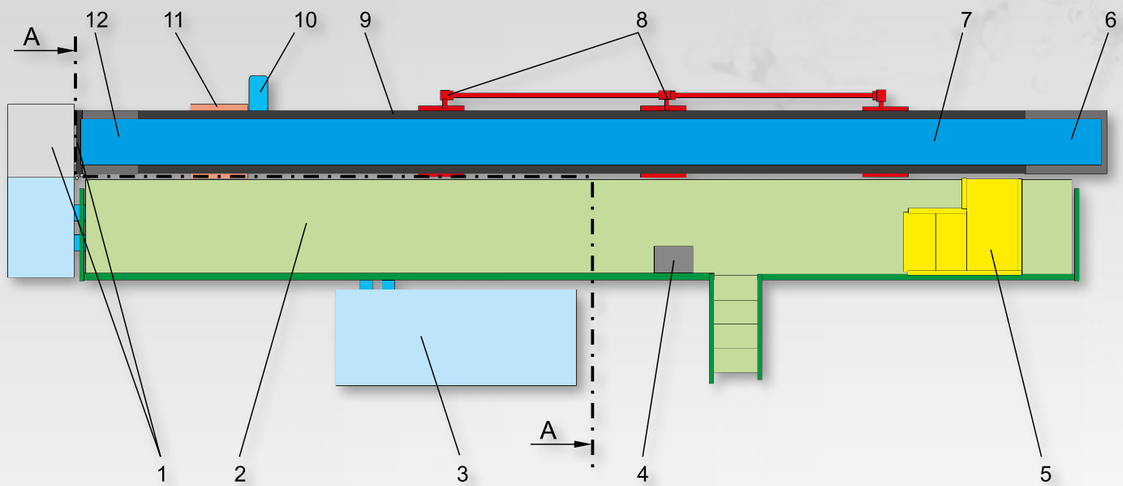

*Plan view: **1** outlet element with gate, **2** gallery, **3** water tank, **4** switch cabinet, **5** platform for sediment feeder, **6** inlet element, **7** experimental section, **8** jacking supports, **9** rails for instrument carrier, **10** pump, **11** fixed support, **12** sediment trap*

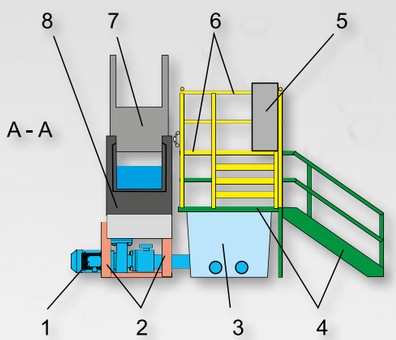

*Side view A-A: **1** pump, **2** fixed support, **3** water tank, **4** gallery, **5** switch cabinet, **6** platform for sediment feeder, **7** gate at the outlet, **8** element of the experimental section*

Element of the experimental section during on-site assembly. The elements are delivered ready for installation. Frames and beams are welded and painted. Tempered glass is used.

Gallery

HM 161 EXPERIMENTAL FLUME: A FEW IMPRESSIONS

Experimental flume HM 161 with sediment transport. The sediment feeder HM 161.73 sits on the inlet element. At the end of the experimental section, the sediment trap HM 161.72 separates the sediment.

View towards the inlet element

Side view during discharge over the ogee-crested weir HM 161.34

Hydraulic jump

Plan view during discharge over the ogee-crested weir HM 161.34

Positive surge wave

Discharge in the active siphon weir HM 161.36

HM 161 Experimental Flume 600x800mm

The illustration shows HM 161 together with the sediment feeder HM 161.73.

*** Experimental section with transparent side walls, length 16m**

*** Homogeneous flow through carefully designed inlet element**

*** Models from all fields of hydraulic engineering available as accessories**

Technical Description

The experimental flume HM 161 is the largest within the GUNT product range. The flow velocities that can be achieved in the experimental flume, and the long length of the experimental section, are the perfect conditions for designing your own projects. These projects can be very close approximations of reality.

The experimental section is 16m long and has a cross-section of 600x800mm. The side walls of the experimental section are made of tempered glass, which allows excellent observation of the experiments. All components that come into contact with water are made of corrosion-resistant materials (stainless steel, glass reinforced plastic). The inlet element is designed so that the flow enters the experimental section with very little turbulence. The closed water circuit consists of a series of water tanks and a powerful pump. The tanks are included in the system in such a way that they also serve as a gallery which you can stand on. The user can thus comfortably reach any part of the experimental section.

The experimental flume has a motorised inclination adjustment to allow simulation of slope and to create a uniform flow at a constant discharge depth.

A wide selection of models, such as weirs, piers, flow-measuring flumes or a wave generator are available as accessories and ensure a comprehensive programme of experiments. Most models are quickly and safely bolted to the bottom of the experimental section. The well-structured instructional material sets out the fundamentals and provides a step-by-step guide through the experiments.

Learning Objectives / Experiments

Together with optionally available models
- uniform and non-uniform discharge
- flow formulae
- flow transition (hydraulic jump)
- energy dissipation (hydraulic jump, stilling basin)
- flow over control structures
  * weirs (sharp-crested, broad-crested, ogee-crested)
  * discharge under gates
- flow-measuring flumes
- local losses due to obstacles
- water surface profiles
- transient flow: waves
- vibrating piles
- sediment transport

HM 161 Experimental Flume 600x800mm

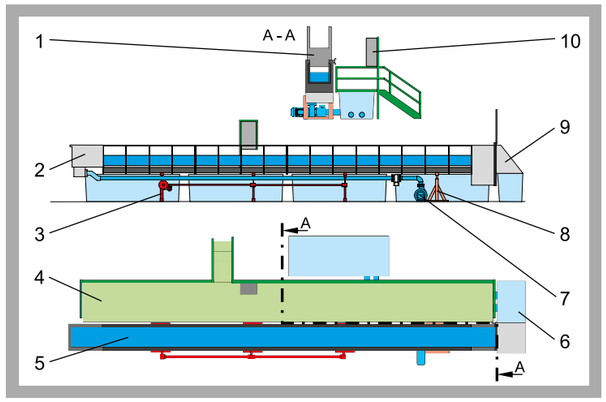

1 gate at the outlet element, 2 inlet element, 3 jacking support with motorised inclination adjustment, 4 gallery, 5 experimental section, 6 water tank, 7 pump, 8 fixed support, 9 outlet element, 10 switch cabinet

Hydraulic jump

HM 161 with outlet element, gallery and switch cabinet in the foreground.

Specification

[1] basic principles of open-channel flow
[2] experimental flume with experimental section, inlet and outlet element and closed water circuit
[3] length of the experimental section 16m
[4] smoothly adjustable inclination of the experimental section
[5] experimental section with evenly spaced threaded holes on the bottom for installing models or for pressure measurement
[6] side walls of the experimental section are made of tempered glass for excellent observation of the experiments
[7] experimental section with guide rails for the optionally available instrument carrier HM 161.59
[8] all surfaces in contact with water are made of corrosion-resistant materials
[9] flow-optimised inlet element for low-turbulence entry into the experimental section
[10] closed water circuit with 6 water tanks, pump, flow meter and manual flow adjustment
[11] water tanks form a gallery that can be walked on
[12] models from all fields of hydraulic engineering available as accessories

Technical Data

Experimental section
- length: 16m
- flow cross-section WxH: 600x800mm
- inclination adjustment: -0,75...2,1%
- 3 spindle-type lifting gears

Tanks
- 1x 2300L
- 5x 4300L

Pump
- power consumption: 15KW
- max. flow rate: 440m³/h
- max. head: 17,5m

Flow rate measuring range: 20...400m³/h

Dimensions and Weight

LxWxH: 20000x4000x4000mm
Weight empty: approx. 4000kg

Required for Operation

400V, 50Hz, 3 phases

Scope of Delivery

1 experimental flume
1 set of instructional material

Order Details

070.16100 HM 161 Large Flow Channel

G.U.N.T Gerätebau GmbH, Hanskampring 15-17, D-22885 Barsbüttel, Phone +49 (40) 67 08 54-0, Fax +49 (40) 67 08 54-42, E-mail sales@gunt.de, Web http://www.gunt.de
We reserve the right to modify our products without any notifications.

HM 161 *Experimental Flume 600x800mm*

Available accessories and options:

Product No.	Order Text
CONTROL STRUCTURES	
070.16129	HM 161.29 Sluice Gate
070.16140	HM 161.40 Radial Gate
070.16130	HM 161.30 Set of Plate Weirs, 4 Types
070.16131	HM 161.31 Broad-Crested Weir
070.16133	HM 161.33 Crump Weir
070.16136	HM 161.36 Siphon Weir
070.16138	HM 161.38 Rake
070.16134	HM 161.34 Ogee-Crested Weir with Pressure Measurement
070.16132	HM 161.32 Ogee-Crested Weir with 2 Weir Outlets
optionally available accessory for HM 161.32	
070.16135	HM 161.35 Elements for Energy Dissipation
CHANGE IN CROSS-SECTION	
070.16144	HM 161.44 Sill
070.16145	HM 161.45 Culvert
070.16146	HM 161.46 Set of Piers, 7 Profiles
070.16177	HM 161.77 Flume Bed with Pebble Stones
FLOW-MEASURING FLUMES	
070.16151	HM 161.51 Venturi Flume
070.16155	HM 161.55 Parshall Flume
070.16163	HM 161.63 Trapezoidal Flume
OTHER EXPERIMENTS	
070.16161	HM 161.61 Vibrating Piles
070.16172	HM 161.72 Sediment Trap
optionally available accessory for HM 161.72	
070.16173	HM 161.73 Sediment Feeder
070.16141	HM 161.41 Wave Generator
070.16180	HM 161.80 Set of Beaches
MEASURING INSTRUMENTS	
070.16152	HM 161.52 Level Gauge
or	
070.16191	HM 161.91 Digital Level Gauge
070.16164	HM 161.64 Velocity Meter
or	
070.16150	HM 161.50 Pitotstatic Tube
070.16153	HM 161.53 20 Tube Manometers
Required accessory for HM 161.50, HM 161.52, HM 161.64 and HM 161.91	
070.16159	HM 161.59 Instrument Carrier

G.U.N.T Gerätebau GmbH, Hanskampring 15-17, D-22885 Barsbüttel, Phone +49 (40) 67 08 54-0, Fax +49 (40) 67 08 54-42, E-mail sales@gunt.de, Web http://www.gunt.de
We reserve the right to modify our products without any notifications.

ACCESSORIES FOR GUNT EXPERIMENTAL FLUMES – WAVE GENERATOR

Wave generator HM 162.41

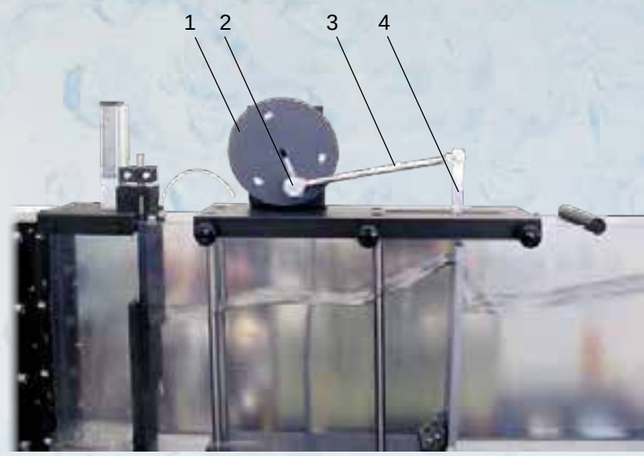

Wave generator HM 160.41:
***1** crank disk, **2** adjustable stroke, **3** driving rod, **4** plate*

The wave generator HM 16x.41 is available as an accessory for all experimental flumes and generates periodic, harmonic waves with different wavelengths and/or wave heights.

An electric motor drives a crank disk, which is connected to a plate via a driving rod. The plate performs a harmonious stroke movement. The speed of the crank disk, in other words the frequency, with which the plate is moved back and forth can be adjusted, therefore affecting the wavelength of the generated waves.

Furthermore, the stroke is finely adjustable, so that the wave height (amplitude) can be varied. The speed of the crank disk is either set on the switch cabinet (HM 162, HM 161) or on a control unit that is part of the wave generator (HM 160).

ACCESSORIES FOR GUNT EXPERIMENTAL FLUMES – SEDIMENT TRANSPORT

Flows in rivers, canals and coastal areas are often associated with sediment transport. Bed-load transport is the main transport mechanism. During bed-load transport, solids are moved along the flume bottom.

The described accessories for the GUNT experimental flumes consider bed-load transport only. The used sediment is sand with a grain size >0,5mm. The sediment is introduced at the inlet of the experimental section. At the end of the experimental section, a sediment trap separates the sediment.

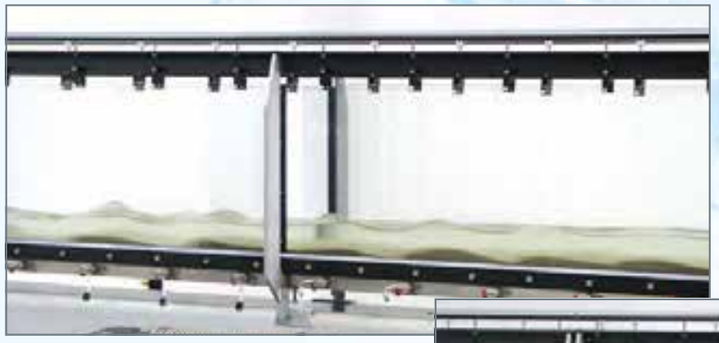

Dune migration

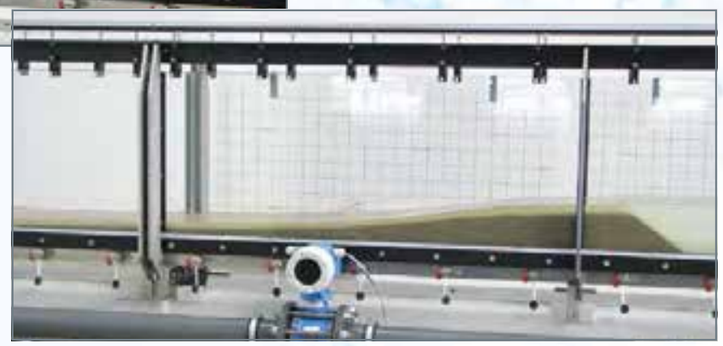

Sediment transport in running waters

SEDIMENT FEED

The sediment is added manually with a shovel or a bucket included in the scope of delivery of the sediment trap HM 16x.72.

Alternatively, the sediment feeder HM 16x.73 can be used. This feeder essentially consists of a vibrating conveyor, via which sediment is evenly introduced into the experimental section. The feeder is mounted above the inlet of the experimental section.

Sediment feeder HM 160.73

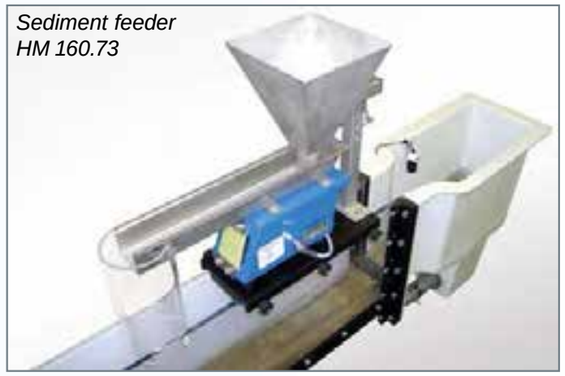

SEDIMENT TRAP

The purpose of the sediment trap is to separate sediment from the flow to prevent sediment from entering the pump or the flow meter. The flow near the bottom of the flume contains the sediment.

Sediment trap HM 160.72 in the water tank of HM 160 for collecting the sediment

The sediment trap HM 160.72 is inserted in the water tank after the outlet element. It consists of a fine mesh screen and serves to collect the sediment.

For the larger experimental flumes HM 162 and HM 161, the sediment trap HM 162.72 / HM 161.72 is permanently mounted between the experimental section and the outlet element. The flow near the bottom is fed into this sediment trap. In the trap, the sediment sinks to the bottom and accumulates. The sediment-free water continues to flow into the outlet element. The sediment is removed manually from the trap and delivered back to the feed.

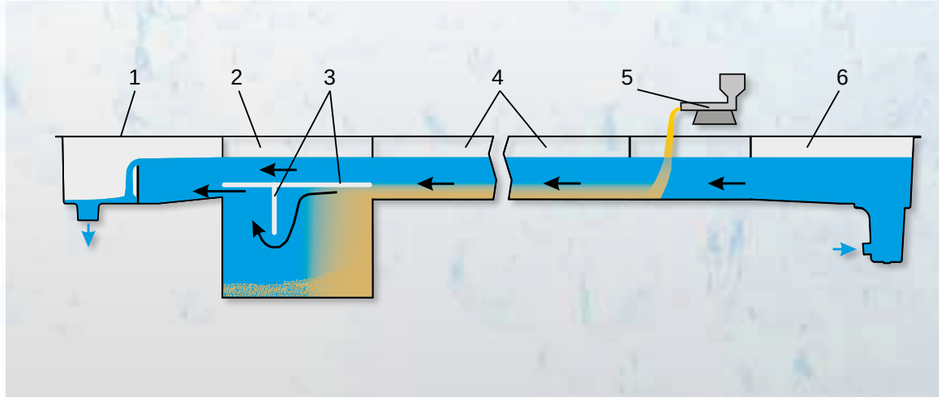

Sediment trap HM 162.72:

1 outlet element,
2 sediment trap,
3 separator,
4 experimental section with sediment,
5 sediment feed (either manually with a bucket or with sediment feeder HM 162.73),
6 inlet element;

sediment,
water

For HM 162, there is an alternative system to the sediment trap HM 162.72: the closed sediment circuit HM 162.71. In the closed sediment circuit, the sediment is collected in a screen basket placed in the water tank below the outlet element. From there, it is directly delivered back to the included sediment feeder using a pump (see principle drawings).

Closed sediment circuit HM 162.71:

1 screen basket,
2 outlet element,
3 pump,
4 experimental section with sediment,
5 sediment feeder,
6 inlet element;

sediment,
water

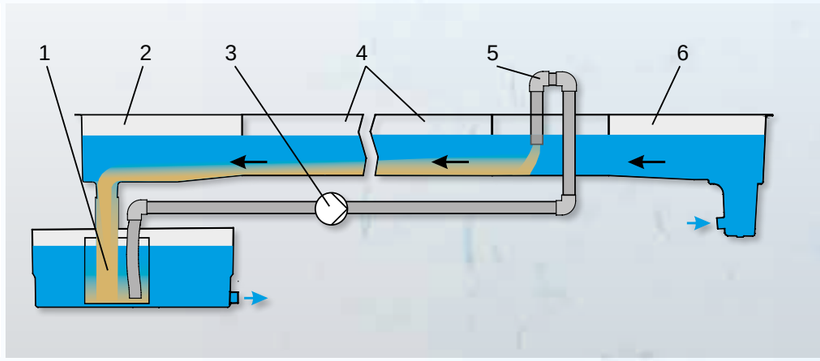

ACCESSORIES FOR EXPERIMENTAL FLUMES HM 160, HM 161 AND HM 162

Over the following pages we will present the complete range of accessories available for the GUNT experimental flumes, using HM 162 as an example. The accessories for the other experimental flumes are similar.

CONTROL STRUCTURES

SLUICE GATE

HM 160.29 Sluice Gate
Product No. 070.16029

HM 161.29 Sluice Gate
Product No. 070.16129

HM 162.29 Sluice Gate
Product No. 070.16229

BROAD-CRESTED WEIR

HM 160.31 Broad-Crested Weir
Product No. 070.16031

HM 161.31 Broad-Crested Weir
Product No. 070.16131

HM 162.31 Broad-Crested Weir
Product No. 070.16231

RADIAL GATE

HM 160.40 Radial Gate
Product No. 070.16040

HM 161.40 Radial Gate
Product No. 070.16140

HM 162.40 Radial Gate
Product No. 070.16240

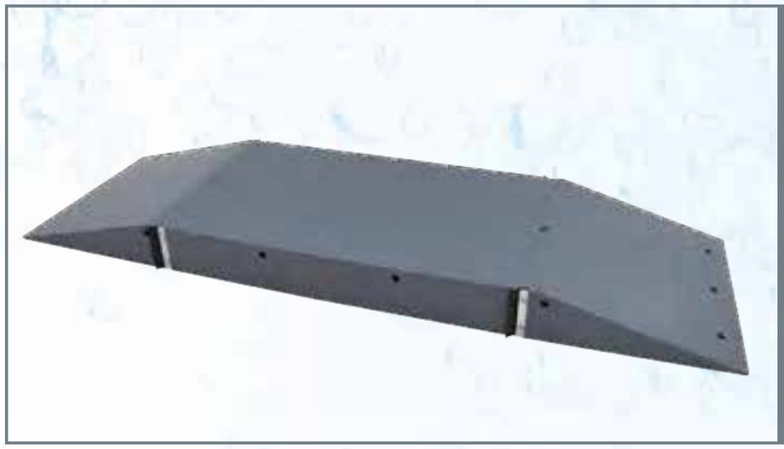

SILL

HM 160.44 Sill
Product No. 070.16044

HM 161.44 Sill
Product No. 070.16144

HM 162.44 Sill
Product No. 070.16244

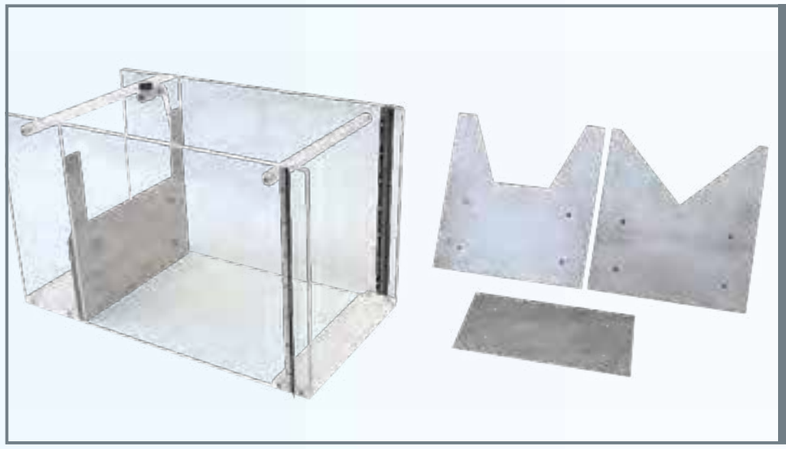

SHARP-CRESTED WEIRS/ PLATE WEIRS

(REHBOCK, CIPOLETTI, THOMSON; rectangular weir without contraction)

HM 160.30 Set of Plate Weirs
Product No. 070.16030

HM 161.30 Set of Plate Weirs
Product No. 070.16130

HM 162.30 Set of Plate Weirs
Product No. 070.16230

CRUMP WEIR

HM 160.33 Crump Weir
Product No. 070.16033

HM 161.33 Crump Weir
Product No. 070.16133

HM 162.33 Crump Weir
Product No. 070.16233

The pictures show accessories for HM 162. The accessories for the other experimental flumes are similar.

The pictures show accessories for HM 162. The accessories for the other experimental flumes are similar.

ACCESSORIES FOR EXPERIMENTAL FLUMES HM 160, HM 161 AND HM 162

CONTROL STRUCTURES

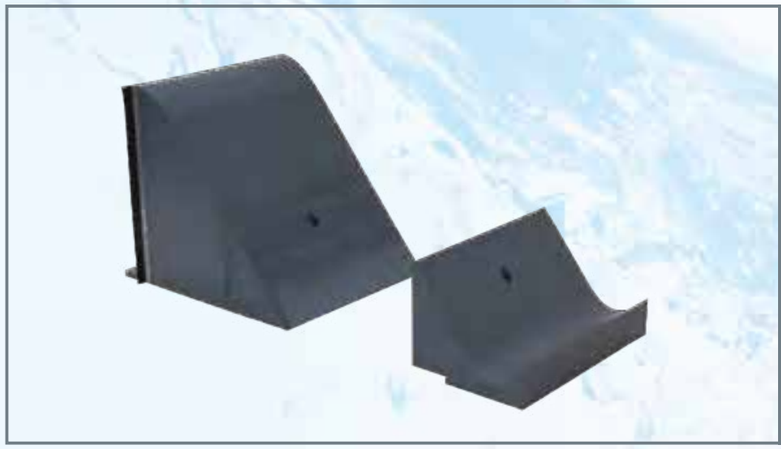

OGEE-CRESTED WEIR
(weir downstream side in WES profile)

HM 160.32 Ogee-Crested Weir with 2 Weir Outlets
Product No. 070.16032

HM 161.32 Ogee-Crested Weir with 2 Weir Outlets
Product No. 070.16132

HM 162.32 Ogee-Crested Weir with 2 Weir Outlets
Product No. 070.16232

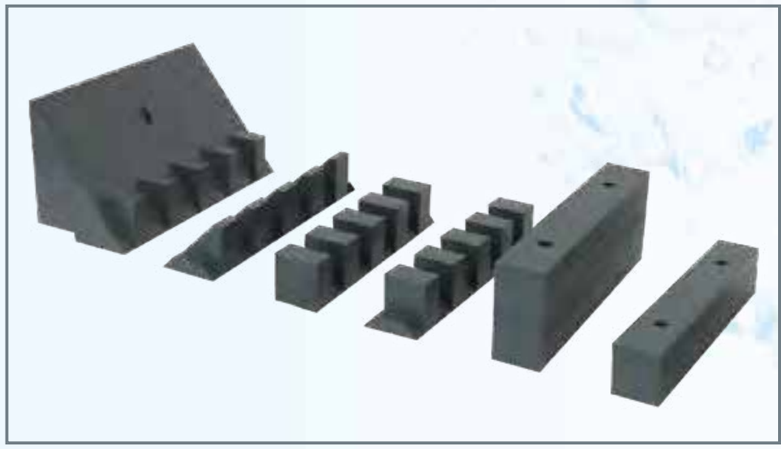

Optional expansion for the ogee-crested weir:
ENERGY DISSIPATION ELEMENTS
(including chute block and sills)

HM 160.35 Elements for Energy Dissipation
Product No. 070.16035

HM 161.35 Elements for Energy Dissipation
Product No. 070.16135

HM 162.35 Elements for Energy Dissipation
Product No. 070.16235

The pictures show accessories for HM 162. The accessories for the other experimental flumes are similar.

OGEE-CRESTED WEIR WITH PRESSURE MEASURING POINTS ALONG THE WEIR DOWNSTREAM SIDE IN WES PROFILE

HM 160.34 Ogee-Crested Weir with Pressure Measurement
Product No. 070.16034

HM 161.34 Ogee-Crested Weir with Pressure Measurement
Product No. 070.16134

HM 162.34 Ogee-Crested Weir with Pressure Measurement
Product No. 070.16234

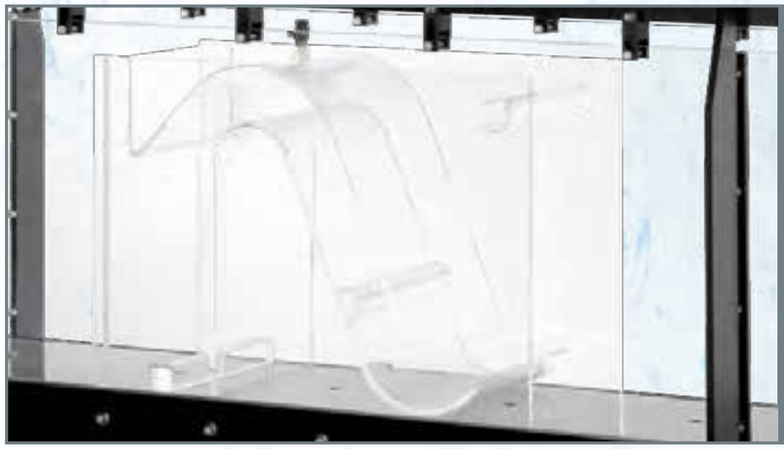

SIPHON WEIR

HM 160.36 Siphon Weir
Product No. 070.16036

HM 161.36 Siphon Weir
Product No. 070.16136

HM 162.36 Siphon Weir
Product No. 070.16236

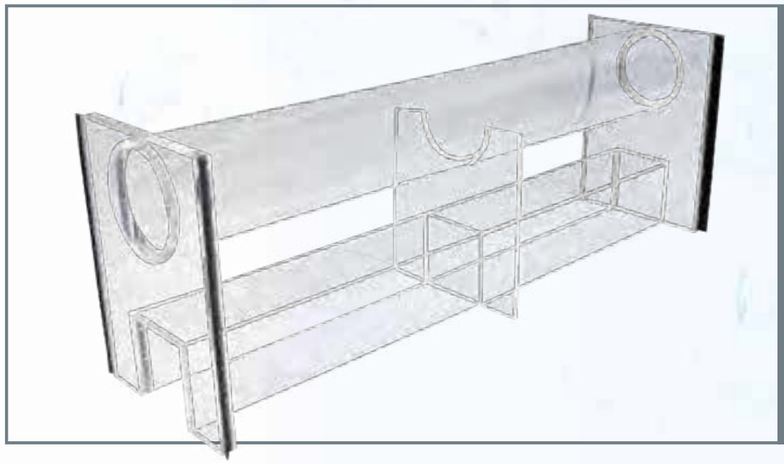

CULVERT

HM 160.45 Culvert
Product No. 070.16045

HM 161.45 Culvert
Product No. 070.16145

HM 162.45 Culvert
Product No. 070.16245

The pictures show accessories for HM 162. The accessories for the other experimental flumes are similar.

ACCESSORIES FOR EXPERIMENTAL FLUMES HM 160, HM 161 AND HM 162

CONTROL STRUCTURES

RAKE

HM 161.38 Rake
Product No. 070.16138

HM 162.38 Rake
Product No. 070.16238

DISCHARGE MEASUREMENT

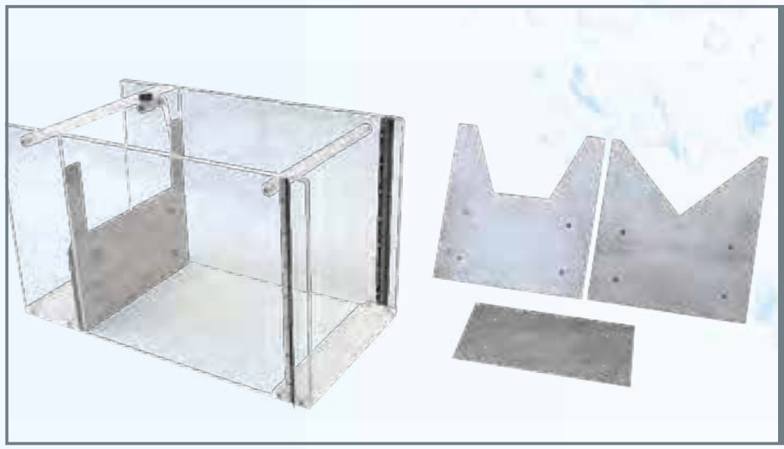

SHARP-CRESTED WEIRS/ PLATE WEIRS

(REHBOCK, CIPOLETTI, THOMSON; rectangular weir without contraction)

HM 160.30 Set of Plate Weirs
Product No. 070.16030

HM 161.30 Set of Plate Weirs
Product No. 070.16130

HM 162.30 Set of Plate Weirs
Product No. 070.16230

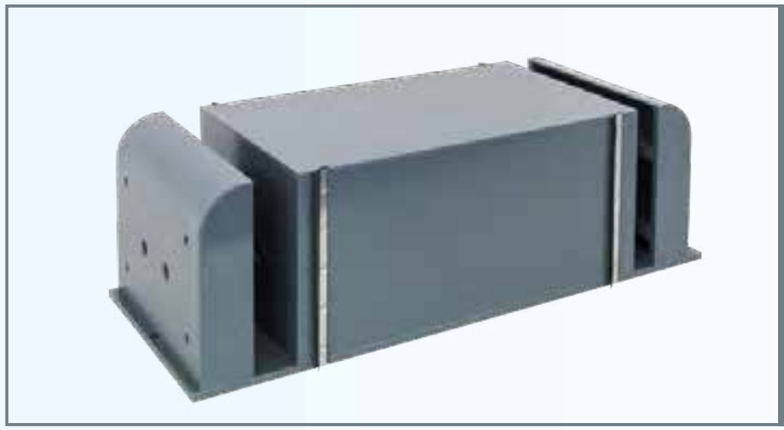

BROAD-CRESTED WEIR

HM 160.31 Broad-Crested Weir
Product No. 070.16031

HM 161.31 Broad-Crested Weir
Product No. 070.16131

HM 162.31 Broad-Crested Weir
Product No. 070.16231

The pictures show accessories for HM 162. The accessories for the other experimental flumes are similar.

DISCHARGE MEASUREMENT

VENTURI FLUME

HM 160.51 Venturi Flume
Product No. 070.16051

HM 161.51 Venturi Flume
Product No. 070.16151

HM 162.51 Venturi Flume
Product No. 070.16251

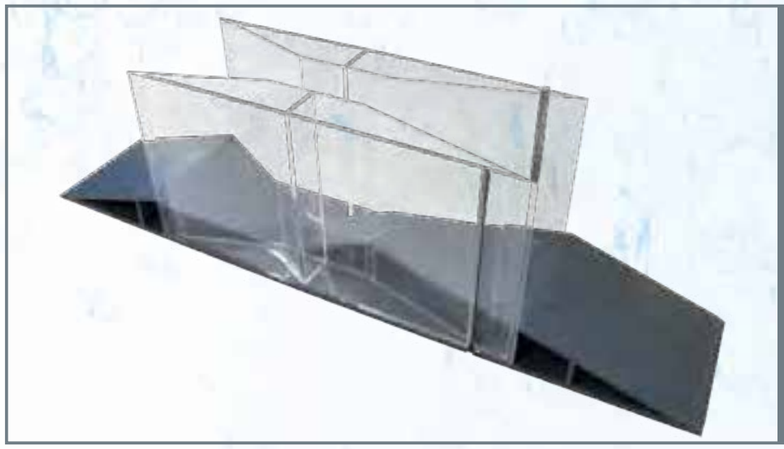

PARSHALL FLUME

HM 161.55 Parshall Flume
Product No. 070.16155

HM 162.55 Parshall Flume
Product No. 070.16255

TRAPEZOIDAL FLUME

HM 161.63 Trapezoidal Flume
Product No. 070.16163

HM 162.63 Trapezoidal Flume
Product No. 070.16263

The pictures show accessories for HM 162. The accessories for the other experimental flumes are similar.

ACCESSORIES FOR EXPERIMENTAL FLUMES HM 160, HM 161 AND HM 162

CHANGE IN CROSS-SECTION

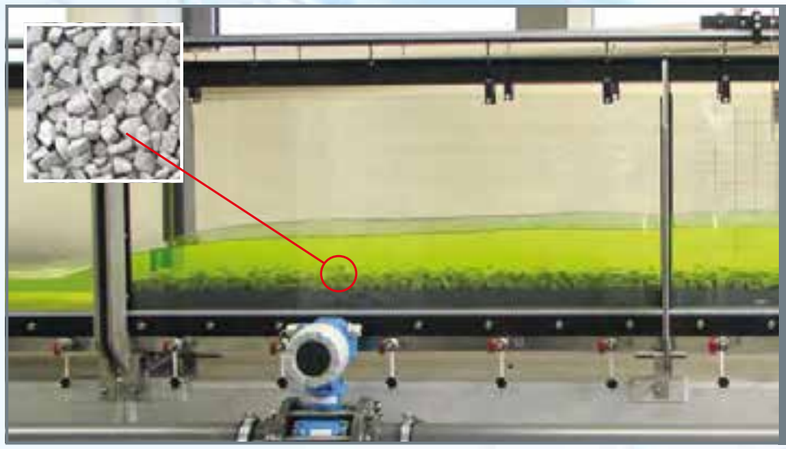

FLUME BOTTOM WITH PEBBLE STONES

HM 160.77 Flume Bottom with Pebble Stones
Product No. 070.16077

HM 161.77 Flume Bottom with Pebble Stones
Product No. 070.16177

HM 162.77 Flume Bottom with Pebble Stones
Product No. 070.16277

SILL

HM 160.44 Sill
Product No. 070.16044

HM 161.44 Sill
Product No. 070.16144

HM 162.44 Sill
Product No. 070.16244

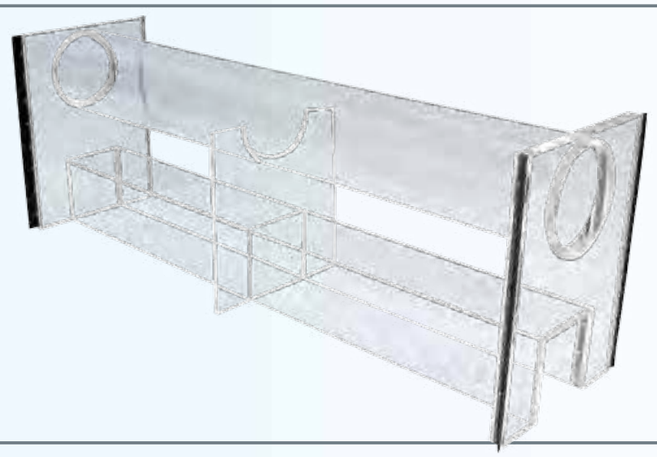

CULVERT

HM 160.45 Culvert
Product No. 070.16045

HM 161.45 Culvert
Product No. 070.16145

HM 162.45 Culvert
Product No. 070.16245

The pictures show accessories for HM 162. The accessories for the other experimental flumes are similar.

CHANGE IN CROSS-SECTION

CRUMP WEIR

HM 160.33 Crump Weir
Product No. 070.16033

HM 161.33 Crump Weir
Product No. 070.16133

HM 162.33 Crump Weir
Product No. 070.16233

PIERS 7 Profiles: rectangular, square, circular, rounded (one end or both ends), pointed-nosed (one end or both ends)

HM 160.46 Set of Piers
Product No. 070.16046

HM 161.46 Set of Piers
Product No. 070.16146

HM 162.46 Set of Piers
Product No. 070.16246

OTHER: FLOW-INDUCED VIBRATIONS

VIBRATING PILES

HM 160.61 Vibrating Piles
Product No. 070.16061

HM 161.61 Vibrating Piles
Product No. 070.16161

HM 162.61 Vibrating Piles
Product No. 070.16261

The pictures show accessories for HM 162. The accessories for the other experimental flumes are similar.

ACCESSORIES FOR EXPERIMENTAL FLUMES HM 160, HM 161 AND HM 162

OTHER: WAVES WITH BEACHES

WAVE GENERATOR

HM 160.41
Wave Generator
Product No. 070.16041

HM 161.41
Wave Generator
Product No. 070.16141

HM 162.41
Wave Generator
Product No. 070.16241

PLAIN BEACH

HM 160.42
Plain Beach
Product No. 070.16042

SET OF BEACHES
(3 beaches: plain, rough, permeable)

HM 161.80
Set of Beaches
Product No. 070.16180

HM 162.80
Set of Beaches
Product No. 070.16280

The pictures show accessories for HM 162. The accessories for the other experimental flumes are similar.

OTHER: SEDIMENT TRANSPORT

SEDIMENT TRAP

HM 160.72
Sediment Trap
Product No. 070.16072

HM 161.72
Sediment Trap
Product No. 070.16172

HM 162.72
Sediment Trap
Product No. 070.16272

SEDIMENT FEEDER

HM 160.73
Sediment Feeder
Product No. 070.16073

HM 161.73
Sediment Feeder
Product No. 070.16173

HM 162.73
Sediment Feeder
Product No. 070.16273

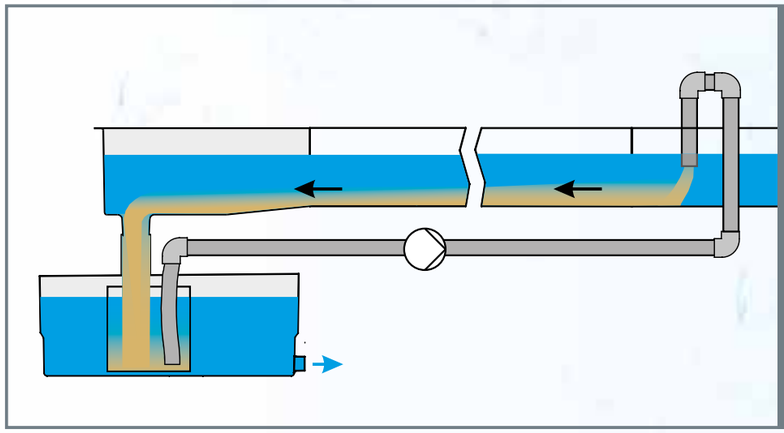

CLOSED SEDIMENT CIRCUIT

HM 162.71
Closed Sediment Circuit
Product No. 070.16271

The pictures show accessories for HM 162. The accessories for the other experimental flumes are similar.

ACCESSORIES FOR EXPERIMENTAL FLUMES HM 160, HM 161 AND HM 162

MEASURING INSTRUMENTS

LEVEL GAUGE
(analogue or with digital display)

HM 160.52 Level Gauge
Product No. 070.16052
HM 160.91 Digital Level Gauge
Product No. 070.16091

HM 161.52 Level Gauge
Product No. 070.16152
HM 161.91 Digital Level Gauge
Product No. 070.16191

HM 162.52 Level Gauge
Product No. 070.16252
HM 162.91 Digital Level Gauge
Product No. 070.16291

VELOCITY MEASUREMENT
(via velocity meter)

HM 160.64
Velocity Meter
Product No. 070.16064

HM 161.64
Velocity Meter
Product No. 070.16164

HM 162.64
Velocity Meter
Product No. 070.16264

VELOCITY MEASUREMENT
(via pitotstatic tube)

HM 160.50 Pitotstatic Tube
Product No. 070.16050

HM 161.50 Pitotstatic Tube
Product No. 070.16150

HM 162.50 Pitotstatic Tube
Product No. 070.16250

INSTRUMENT CARRIER
(accessory required for the level gauge and the velocity measurement)

HM 161.59
Instrument Carrier
Product No. 070.16159

HM 162.59
Instrument Carrier
Product No. 070.16259

The pictures show accessories for HM 162. The accessories for the other experimental flumes are similar.

The pictures show accessories for HM 162. The accessories for the other experimental flumes are similar.

ACCESSORIES FOR EXPERIMENTAL FLUMES HM 160, HM 161 AND HM 162

MEASURING INSTRUMENTS

TUBE MANOMETERS

HM 160.53
10 Tube Manometers
Product No. 070.16053

HM 161.53
20 Tube Manometers
Product No. 070.16153

HM 162.53
10 Tube Manometers
Product No. 070.16253

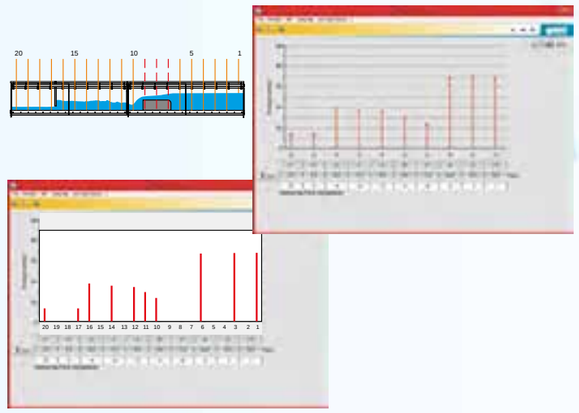

PRESSURE MEASUREMENT

HM 162.13 Electronic Pressure Measurement, 10 x 0...50 mbar
Product No. 070.16213

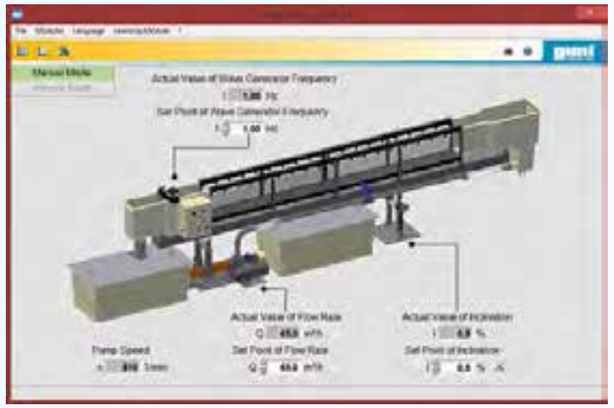

DATA ACQUISTION AND AUTOMATION

HM 162.12 System for Data Acquisition and Automation
Product No. 070.16212

The pictures show accessories for HM 162. The accessories for the other experimental flumes are similar.

OTHER ACCESSORIES

ELECTRICAL INCLINATION ADJUSTMENT
(recommended for experimental sections larger than 7,5 m)

HM 162.57 Electrical Inclination Adjustment
Product No. 070.16257

WATER TANK, 1100 L

HM 162.20
Water Tank
Product No. 070.16220

EXPERIMENTAL FLUME EXTENSION ELEMENT, 2,5 m
(for longer experimental sections)

HM 160.10
Extension Element
Product No. 070.16010

HM 162.10
Extension Element
Product No. 070.16210

The pictures show accessories for HM 162. The accessories for the other experimental flumes are similar.

SETUP OF GUNT EXPERIMENTAL FLUMES USING THE EXAMPLE OF HM 162

Inlet element, outlet element and flume supports

Elements of the experimental section

Water tank and piping

The carrier (bottom left) is assembled from separate elements (left) and placed on the flume supports using a forklift (right). The flume supports are bolted into the floor (centre).

Jacking support for inclination adjustment

The experimental section element is placed on the carrier with a forklift, aligned and installed.

The inlet element is raised onto the carrier, aligned and connected to the experimental section.

Then the experimental flume is sealed.

Last but not least is work on the wiring (left). Then the water tank is aligned and connected to the pipeline system (right).

GUNT experimental flumes are set up and commissioned by experienced staff on site. This ensures that you can focus on your experiments right from the word go.

Once installation is complete the system is commissioned; this photo shows the process with the broad-crested weir.

This fully assembled experimental flume is located at the Universiti Teknologi PETRONAS (UTP) in Ipoh, Malaysia.

GUNT EXPERIMENTAL FLUMES ARE BEING USED ALL AROUND THE WORLD

Below is a selection of customers who are using a GUNT experimental flume. There is at least one GUNT experimental flume in each of these countries, often there are several flumes in use at other colleges and universities within the country.

Satisfied customers...

...in Malaysia with HM 162

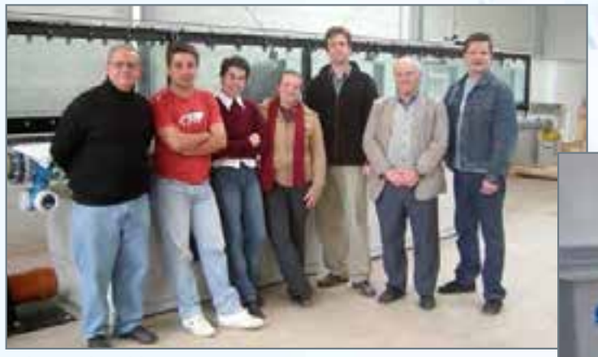

...in Spain with HM 162

...in Spain with HM 160

...in Bangladesh with HM 161

...in Indonesia with HM 162

Africa

Université de Guelma (HM 160), Algeria

TU Berlin Campus El Gouna (HM 162), Egypt

University of Asmara (HM 160), Eritrea

Haramaya University (HM 162), Ethiopia

Rivers State University of Science and Technology (HM 160), Nigeria

America

Centro Universitário Luterano de Palmas (CEULP/ULBRA; HM 160), Brazil

Concordia University, Montreal (HM 162), Canada

Universidad Central de Chile (HM 162), Chile

Tecnológico de Costa Rica (TEC; HM 160), Costa Rica

Instituto Tecnológico Agropecuario No. 10 de Torreón (ITA 10; HM 161), Mexico

Universidad Nacional de Santa (HM 160), Peru

Burlington County College, Pemberton, NJ (HM 160), USA

Universidad Católica Andres Bello Guayana (UCAB; HM 160), Venezuela

Asia

Herat University (HM 162), Afghanistan

Military Institute of Science and Technology (MIST; HM 161), Bangladesh

Institut Teknologi Brunei (ITB; HM 162), Brunei

City University of Hong Kong (HM 162), China

Indian Institute of Technology of Roorkee (ITT; HM 162), India

Universitas Bandar Lampung (HM 162), Indonesia

Qom University, Faculty of Engineering (HM 162), Iran

University of Technology, Bagdad (HM 160), Iraq

Universiti Teknologi PETRONAS (HM 162), Malaysia

Far Eastern University, College of Engineering (HM 160), Philippines

Taif University (HM 162), Saudi Arabia

Burapha University, Faculty of Engineering (HM 161), Thailand

American University of Sharjah (HM160), United Arab Emirates

Europa

University of Cyprus, Dept. Of Civil and Environmental Engineering (HM 162), Cyprus

UTC - Université de Technologique de Compiègne, Lab. Roberval (HM 160), France

Bundesanstalt für Wasserbau Karlsruhe (BAW; HM 162), Germany

Technische Universität Hamburg-Harburg (TUHH; HM 162), Germany

University of Brighton, School of Environment (HM 162), Great Britain

Rezekne Higher Education Institution (HM 160), Latvia

Warsaw Agricultural University (HM 162), Poland

Politécnico de Viseu (HM 162), Portugal

Moscow State Construction University (MGSU; HM 162), Russia

STU Slovak University of Technology, Faculty of Civil Engineering (HM 163), Slovakia

Universidad de la Laguna (ULL; HM 162), Spain

Okan University (HM 160), Turkey

...and many more

BASIC KNOWLEDGE

FUNDAMENTALS OF SEDIMENT TRANSPORT

Flows in rivers, canals and coastal areas are often associated with sediment transport. Sediment transport consists of **suspended-load transport** and **bed-load transport**.

Bed-load transport takes place in the area near the bottom and is therefore a very important factor in the shaping of the river bed. In natural running waters, erosion and sedimentation processes are constantly alternating and characterise the bed load balance of the water route.

When studying the flow behaviour in flumes, it is bed-load transport that is the predominant component. Sediment that is deposited (siltation) or removed (erosion and / or scour formation) may, for example, change the flow rates through a cross-section or the water surface profiles. Sediment transport can also result in a modified bed structure (formation of ripples or dunes, change of roughness).

Sediment that is transported as suspended matter is only relevant for the transport balance when it is deposited, thus contributing to siltation, for example in very slowly flowing or still waters

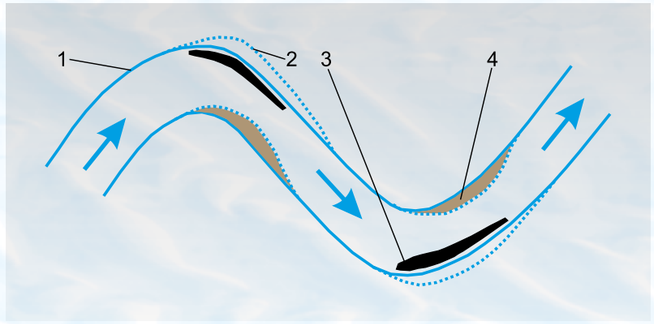

River (top view):

***1** original river bed,*
***2** river bed altered by sediment transport at a later time,*
***3** scour/erosion, **4** siltation*

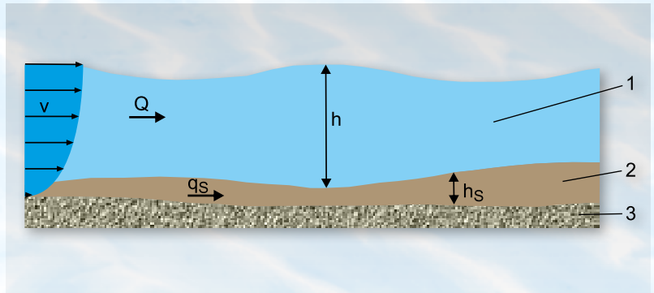

River (section):

***1** water, **2** movable sediment, **3** fixed bottom;*
***v** flow velocity, **Q** discharge,*
***q_s** sediment transport capacity,*
***h** discharge depth,*
***h_s** thickness of the sediment layer*

To assess the discharge behaviour of a flume in the case of normal discharge, in addition to the commonly known equations on conservation of energy, conservation of momentum and conservation of mass, it is also necessary to consider the transport balance on the control volume – is the same amount of sediment that leaves the control volume, also fed back in? Transport formulae are empirical formulae, such as Meyer-Peter & Müller.

The GUNT trainers that cover this field of study are mainly concerned with bed-load transport.

START OF SEDIMENT MOVEMENT

The sediment grains located at the bottom are only set in motion when the critical bottom shear stress is exceeded. We can distinguish between three possibilities here:

- frequent or permanent exceedance: **formation of ripples** and **dunes** on the bottom
- only exceeded during extreme events such as storm surge or flooding: abrupt change in the bottom
- not exceeded: depositing of suspended matter, bottom can silt up in the medium term.

Usually sediment consists of grains of different sizes. Larger grains are more exposed to the flow and withstand larger flow forces than small grains. Small grains can be shielded by the larger grains (hiding effect) and thus only begin to move at larger flow forces than unshielded grains.

STRUCTURE OF MOVING LAYERS IN RUNNING WATERS

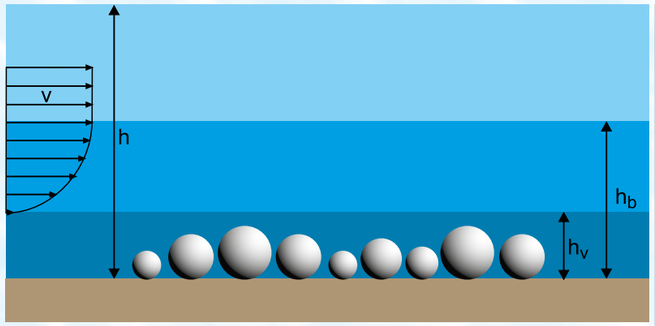

Smooth boundary:

***h** discharge depth, **h_b** thickness of the boundary layer,*
***h_v** thickness of the viscous layer*

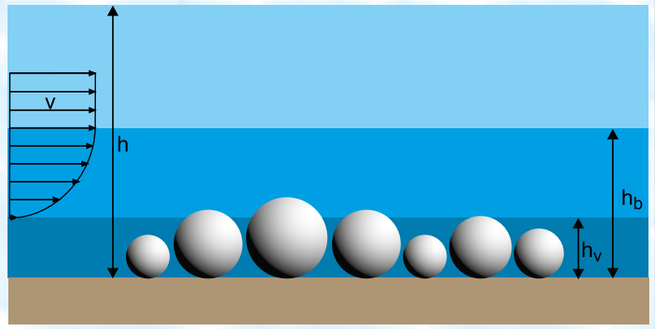

Rough boundary:

***h** discharge depth, **h_b** thickness of the boundary layer,*
***h_v** thickness of the viscous layer*

The flow velocity of the water is close to zero near the flume bottom. This region is called the **boundary layer**. The **viscous sublayer** is located directly above the flume bottom and is very thin. The formation of the viscous sublayer depends on the surface characteristics of the flume bottom. We refer to a smooth boundary if roughness elements such as sediment grains are completely within the sublayer. As soon as the sediment grains project from the sublayer, we call it a rough boundary.

The smooth boundary between sediment layer and flow occurs at slow flow velocities (thin viscous sublayer) and/or small grain diameters of the sediment. With large grain diameters (> 0,6 mm) and/or high flow velocities (thick viscous layer) we refer to the rough boundary.

TYPES OF SEDIMENT TRANSPORT

A sediment grain in a flow is subject to different forces acting on it. The form of sediment transport that occurs is decided according to the size, mass and shape of the grain and according to the acting flow force. The illustration below shows all the relevant forces:

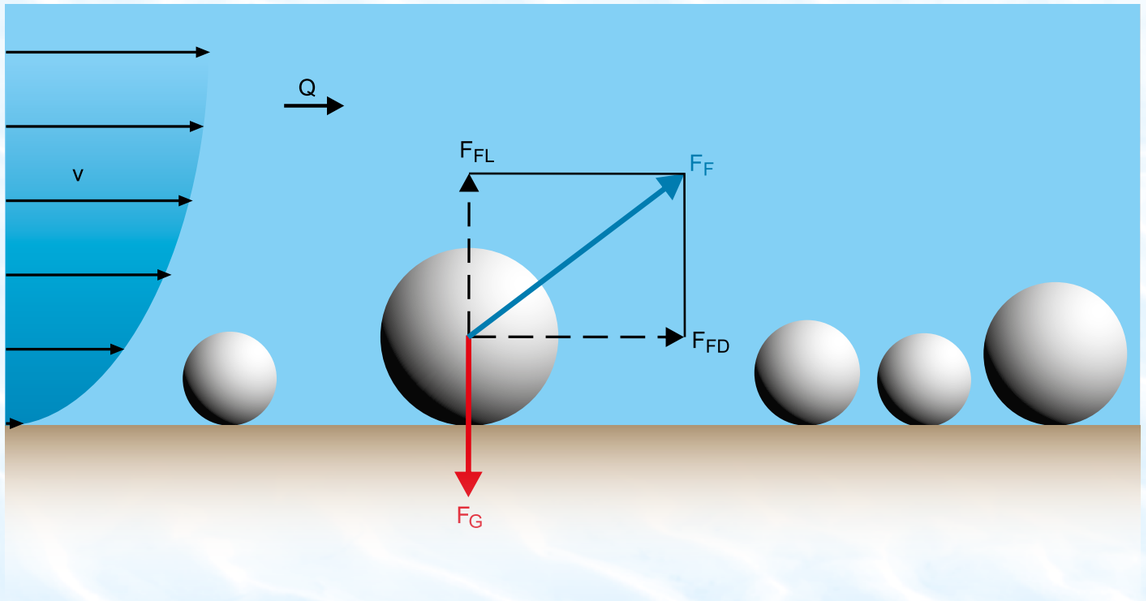

Forces on sediment grain at the flume bottom:

v *flow velocity,* ***Q*** *discharge,* F_G *weight,* F_F *flow force,* F_{FL} *lift force,* F_{FD} *drag force*

The flow force F_F is the force resulting from vertically acting lift force F_{FL} and the horizontal acting drag force F_{FD}. In order for the sediment grain to leave the flume bottom (for saltation or as suspended matter), the lift force must be greater than that of the opposing weight F_G of the sediment grain.

The flow force acting on small grains is smaller than on a larger grain, due to the distribution of flow velocity ***v*** between flume bottom and the surface of the water. Therefore, for the larger grain the weight F_G is greater and prevents suspended load transport.

Large grains (e.g. stones) roll or slide across the bottom, while small sand grains become suspended matter. Sediment grains that are larger than sand, such as fine gravel, can also be subject to saltation.

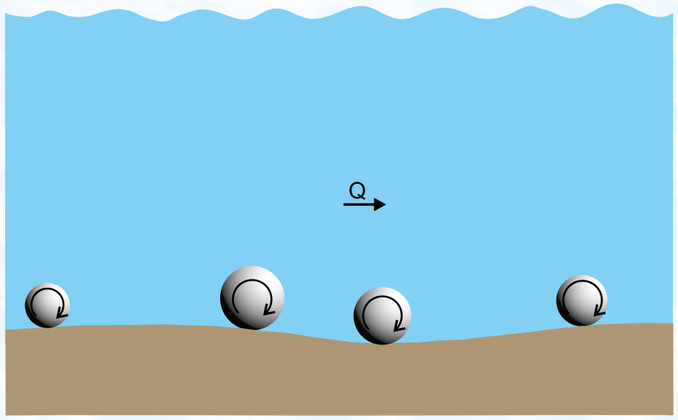

Rolling:

The sediment remains in constant contact with the bottom. Normally it is large sediment grains that roll, such as stones.

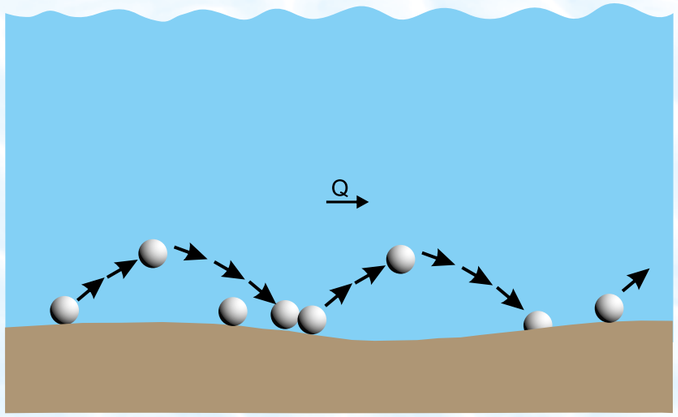

Saltation:

The sediment grain, e.g. a small pebble, is torn from the bottom by the flow and thus briefly leaves the bottom. The flow drags it along before it is deposited on the bottom again. It appears as though the particle is jumping.

Bed load consists of solids that are moved along the bottom. The main factors are:
■ discharge ■ slope ■ bed structure ■ amount of available solids

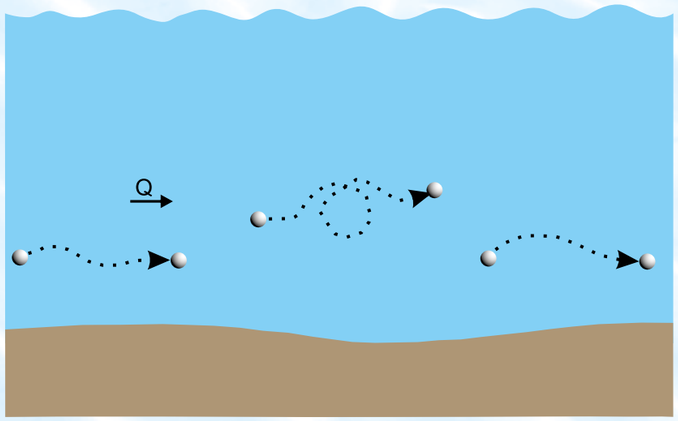

Suspension:

Suspended matter is solids that are suspended in the water and that have no contact with the bottom.

The main factors are:

- settling velocity (grain diameter, grain shape, grain density, density of the water)
- flow parameters (velocity distribution in the flume, turbulence)

BED FORM

The processes that wind causes in a (sand) desert are similar to the processes in running waters.

As soon as the flow velocity is a bit higher than the critical velocity at which the sediment is set in motion, we start to see unevenness at flume bottom, which is known as the **bed form**. This unevenness can reach heights of about 1/3 of the flow depth. There are essentially three basic forms of bed forms: **ripples, dunes and antidunes**.

Current ripples are caused by processes in the boundary layer, so that the minimum discharge depth is approximately three times the ripple height. The maximum sand grain diameter for the formation of ripples is approximately 0,6 mm. Ripples are 3...5 cm high on average and have a wavelength of 4...60 cm. They are so small that their influence on the flow does not reach the surface.

Dunes are large ripples and can be described as large, often regular sills. Their height depends on the discharge depth. They also affect the flow up to the surface. Ripples and dunes can occur overlayed.

Ripples and dunes move in the direction of flow. The rarer **antidunes** move against the flow direction. Antidunes occur in supercritical discharge and form wavy bed forms.

Types of ripple

There are **current ripples** (explained on this page) and **wave ripples**, which are caused by the surface waves in the shallow water region. Asymmetric ripples are caused by a flow interfering with surface waves.

FORMATION AND MOVEMENT OF CURRENT RIPPLES

When the critical flow velocity for the movement of sand has been reached, the grains begin to move. They form small clusters (hills). The hills work like irregularities on the sediment surface. These irregularities are only a few grains thick and affect the flow in the boundary layer. The streamlines above a hill are closer together, the flow velocity is higher (**Bernoulli effect**, see illustration of erosion in the trough). The higher flow velocity can cause other grains on the upstream side of the hill to roll or jump and accumulate on the top. If too many grains have been piled up, the situation becomes unstable and they slide down the downstream side of the hill. The downstream side is steeper than the upstream side.

At the top of the hill the streamline lying on the sand surface, so to speak, is detached from the surface and then bounces back onto the sand surface (see illustration of the emergence of counterflows on the downstream side). The area below this streamline is called the separation zone. In this zone a separation eddy can form, causing a small counterflow. Turbulence and erosion are also present, so that valleys between the ripples form or deepen. These valleys are called troughs. Some of the eroded grains deposit at the bottom of the downstream side, while others are carried away by the fluid and/or deposited on the upstream side.

The sand grains on the top of the sediment layer are continuously transported onwards, so that the ripples move in the flow direction and appear to wander.

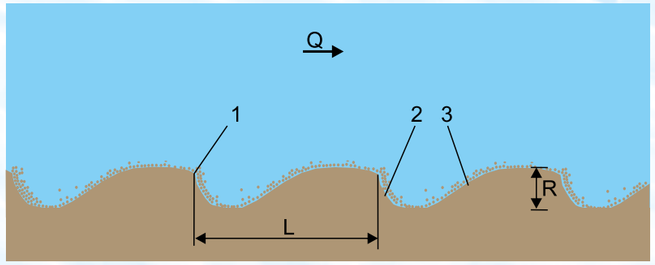

1 top of the ripple, 2 downstream side of the ripple,
3 upstream side of the ripple;
L wavelength, R ripple height

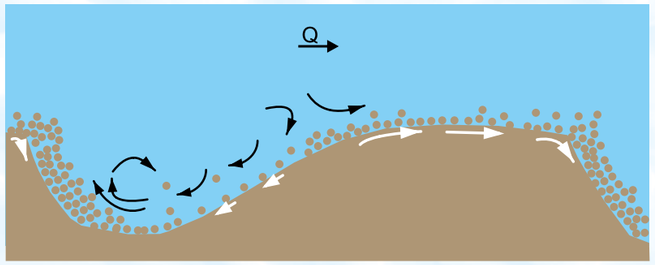

Black arrows: turbulence in the water,
white arrows: direction of motion of the sand

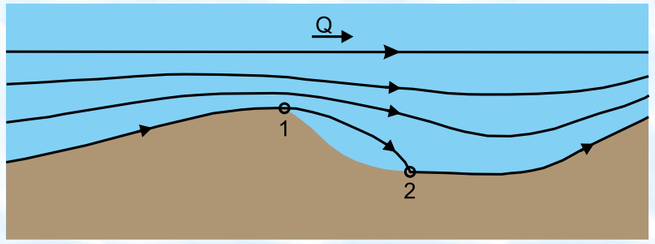

Erosion in the trough:
1 detachment of the streamline at the top, 2 impact point
black lines: streamlines

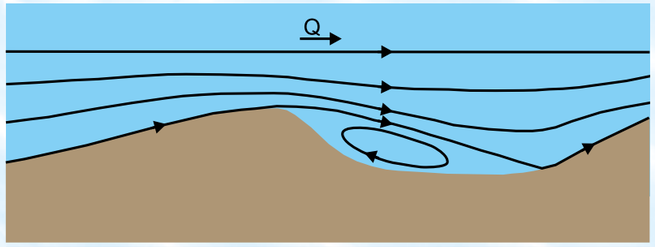

Emergence of counterflows at the downstream side:
separation zone with vortex

SEDIMENT TRANSPORT AT BRIDGE PIERS

Structures such as bridge piers can change the flume bottom of a watercourse in the long term. The flow conditions altered by the structure can cause scour formation on the flume bottom in the immediate vicinity of the structure. Scour can occur even if there is no actual sediment transport in the watercourse. In this case we refer to **clear-water scour**.

There are two main causes of scour formation at structures: contraction scour and local erosion. In local erosion, the flow is deflected locally by the structure. Highly turbulent vortex systems form in the immediate vicinity of the structure, leading to increased local velocities (see illustrations). This increases the erosion rate of the sediment. In the case of contraction scour, the reduction of the flow cross-section through the structure, for example a bridge pier, causes higher flow velocities. The increased flow velocities induce increased bottom shear stress, i.e. an increased carrying capacity. The erosion at the base or foundation of the pier can have fatal consequences, potentially leading to the collapse of the structure. It is therefore important to understand the mechanisms of scour formation, in order to be able to predict the probable scour depth and to take appropriate protective measures.

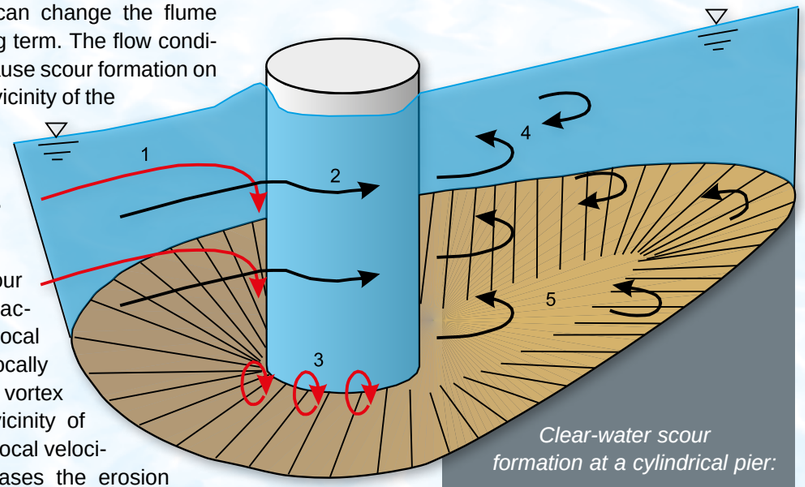

Clear-water scour formation at a cylindrical pier:

1 downward flow,
2 flow around the pier,
3 horseshoe vortex,
4 wake vortex,
5 scour

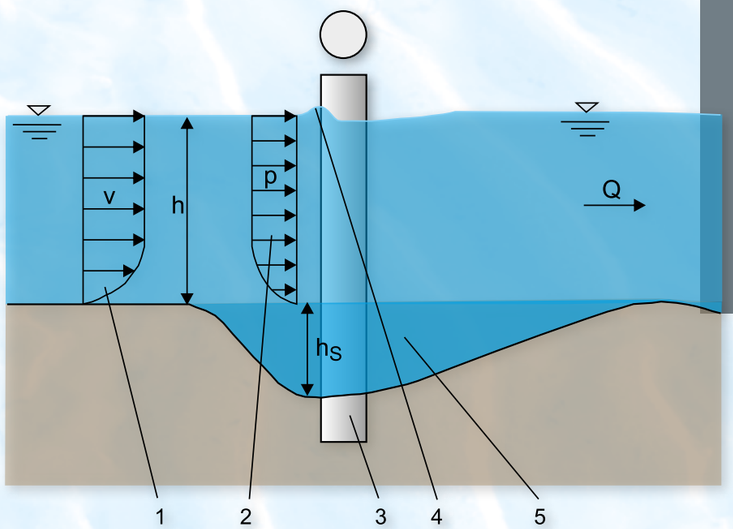

Clear-water scour formation (side view):

1 velocity distribution of the discharge,
2 pressure distribution,
3 cylindrical pier,
4 pier backwater,
5 scour;
h discharge depth,
h_s scour depth,
Q discharge

During scour formation there are two largely independent vortex systems that occur: the **horseshoe vortex system** and the **wake vortex system** (see illustration of clear-water scour formation at a cylindrical pier). In this case, the horseshoe vortex system is the decisive system in scour formation. Horseshoe vortices are caused by the downward flow at the upstream side of the structure. The downward flow occurs due to the pressure drop (see red arrows in the top illustration and the pressure distribution in the bottom side view). Wake vortices occur during the separation of the boundary layer around the sides of the cylinder flowed around (black arrows in the top illustration).

For cylindrical piers, the (clear-water) scour is at is largest on the upstream side, while rectangular piers have the greatest scour formation on the sides.

Fluvial obstacle mark

Scour formation also leads to siltation, also known as silt accumulation, downstream of the obstacle. Both phenomena are grouped under the term fluvial obstacle mark.

The illustrations below show the fluvial obstacle mark on the pier if upstream bed-load transport is taking place in the watercourse.

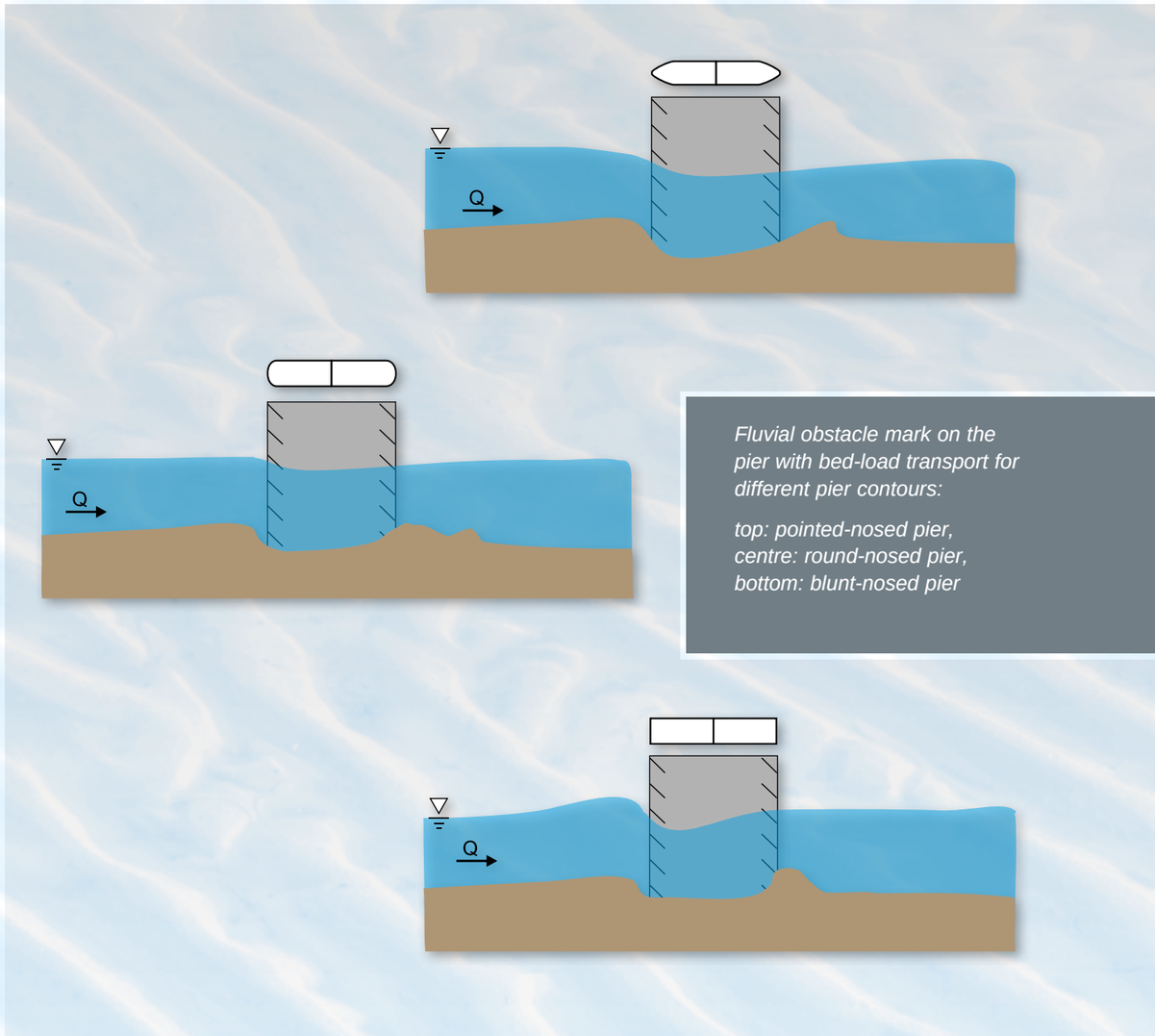

Fluvial obstacle mark on the pier with bed-load transport for different pier contours:

top: pointed-nosed pier,
centre: round-nosed pier,
bottom: blunt-nosed pier

SEDIMENT TRANSPORT IN RUNNING WATERS

Sediment transport in running waters (suspended load transport or bed-load transport) can be demonstrated and studied with four GUNT units. For balancing a watercourse it is usually only the bed-load transport that transports or deposits sediment in a control volume that is relevant. Suspended matter passes the control volume and therefore is not part of the transport balance.

Suspended load transport is only relevant to the transport balance if the flow velocity is very small, so that suspended matter can settle out. Suspended load transport is demonstrated with HM 142. Bed-load transport is demonstrated in HM 166, HM 140 and HM 168. The GUNT experimental flumes HM 160 – HM 162 are also suitable for bed-load transport.

SUSPENDED LOAD TRANSPORT

HM 142
SEPARATION IN SEDIMENTATION TANKS

In many watercourses fine sediment is in suspension as suspended matter. This suspended matter is not usually taken into account in the transport balance.

At very slow flow velocities, it is possible that suspended matter settles. In storage lakes or dams this can lead to undesired siltation. In wastewater treatment plants on the other hand, there are sedimentation tanks where sedimentation is desirable and is used as a separation process for the treatment of wastewater.

- separation of a suspension in the transparent sedimentation tank
- factors affecting the separation process
  - flow velocity
  - concentration of the sediment
- visualisation of the flow conditions with ink

BED-LOAD TRANSPORT

HM 166
FUNDAMENTALS OF SEDIMENT TRANSPORT

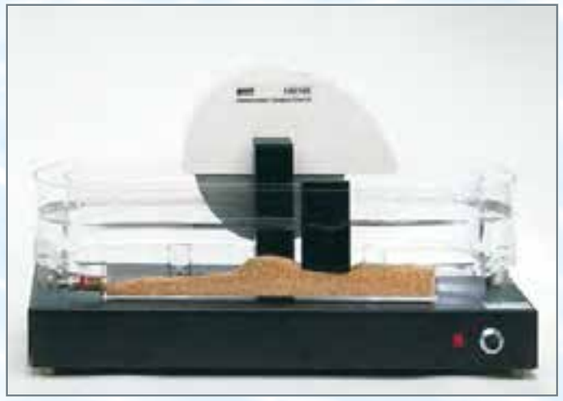

- water is delivered in a circulating channel by a paddle
- deepening along a straight section of the channel as the experimental section
- experimental section with transparent side walls, LxWxH: 660x50x150mm
- variable-speed paddle produces flows at a velocity between 0...1m/s
- start conditions for sediment transport
- demonstration of ripple and dune formation on the river bed
- fluvial obstacle mark of bridge piers (scour formation and siltation)

HM 140
OPEN-CHANNEL SEDIMENT TRANSPORT

- inclining experimental section with transparent side walls
  - length of the experimental section: 1600mm
  - flow cross-section WxH: 300x86mm
  - inclination adjustment: -1...+3%
- discharge measurement can be adjusted by valve
- closed water circuit with pump, inlet and outlet element
- open-channel bed-load transport
- observing bed forms: ripples, dunes, antidunes
- sediment transport at structures:
  - bridge piers
  - sluice gate

also:

- basic principles of open-channel flow without sediment transport

Dune migration: the sediment migrates upwards through the flow on the upstream side to remain lying downstream.

HM 168
SEDIMENT TRANSPORT IN RIVER COURSES

- stainless steel experimental flume
- dimensions of the experimental section, LxWxH: 5x0,8x0,25m
- closed water circuit with pump, inlet and outlet element
- discharge measurement can be adjusted in two areas:
  - low discharge: 0...2m³/h (e.g. to observe meanders)
  - discharge up to 70m³/h (e.g. observe ripple formation)
- open-channel bed-load transport
  - scour formation
  - siltation
  - ripple formation
- observe formation of meanders
- fluvial obstacle marks on structures:
  - various bridge piers
  - island

Erosion and siltation in the river bed

HM 166 Fundamentals of Sediment Transport

*** Sediment transport in open channels**

*** Circulating flow channel with transparent side walls as open channel**

*** Observing ripple formation and fluvial obstacle marks**

Technical Description

In many real open channels there is sediment transport that affects the flow behaviour. Normally the key component is bed-load transport. HM 166 uses sand to demonstrate important phenomena of bed-load transport in the area near the bottom. The transparent experimental section allows observation of the formation of ripples in the river bed.

HM 166 consists of a circulating, oval, transparent flow channel. A deepening for holding the sediment in the longitudinal side of the channel forms the experimental section. The other longitudinal side contains a paddle that produces the flow. A flow straightener at the inlet to the experimental section ensures low-turbulence flow.

The speed of the paddle can be adjusted in order to study how the flow velocity affects the bed-load transport. Flow velocities can be generated in the region of critical discharge (without sediment). The paddle is driven by an electric motor and a belt drive. Motor and speed adjustment are located under the base plate and are water resistant.

The fluvial obstacle mark, i.e. scour formation and siltation at bridge piers, is observed at three different pier models, which are inserted into the experimental section.

The well-structured instructional material sets out the fundamentals and provides a step-by-step guide through the experiments.

Learning Objectives / Experiments

Observation of
- * starting conditions for bed-load transport
- * how flow velocity affects bed-load transport
- * ripple and dune formation on the river bed
- * fluvial obstacle mark of bridge piers (scour formation and siltation)
- * secondary flows in channel bends

Additionally with fine sand
- observation of solid matter flows
- how sediment size and density affect sediment transport

HM 166 Fundamentals of Sediment Transport

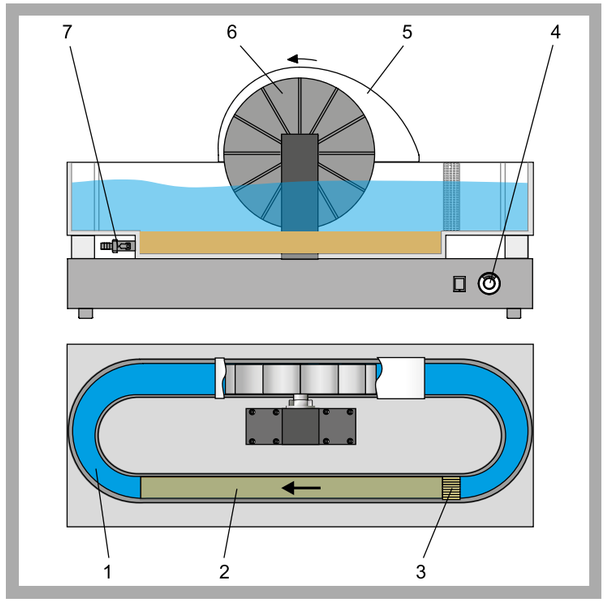

1 flow channel, 2 experimental section, 3 flow straightener, 4 paddle speed adjustment, 5 splash guard, 6 paddle, 7 drainage valve

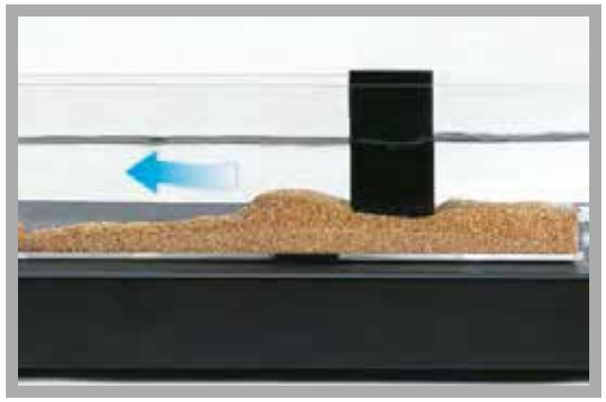

Fluvial obstacle mark (scour formation and siltation) on piers

Specification

[1] experimental unit for bed-load transport in open channels
[2] transparent, circular, oval flow channel as open channel
[3] variable-speed paddle to generate the flow velocity
[4] experimental section with transparent deepening for holding the sediment
[5] low-turbulence flow at the inlet to the experimental section thanks to a flow straightener
[6] paddle driven via electric motor and belt drive
[7] three different bridge piers for observing fluvial obstacle marks on piers

Technical Data

Experimental section
- length: 660mm
- cross-section WxH: 50x200mm
- deepening: 50mm

Flow channel
- height: 150mm
- width: 50...72mm

Paddle
- 12 blades
- diameter: 330mm
- speed at the paddle: 5,2...70min^{-1}

Flow velocity: approx. 0...1m/s

Dimensions and Weight

LxWxH: 1030x410x560mm
Weight: approx. 42kg

Required for Operation

230V, 50/60Hz, 1 phase or 120V, 60Hz/CSA, 1 phase

Scope of Delivery

1 experimental unit
3 piers
5kg sand (1...2mm grain size) with blade
1 filter unit, 1 Allen key
1 set of instructional material

Order Details

070.16600 HM 166 Fundamentals of Sediment Transport

G.U.N.T Gerätebau GmbH, Hanskampring 15-17, D-22885 Barsbüttel, Phone +49 (40) 67 08 54-0, Fax +49 (40) 67 08 54-42, E-mail sales@gunt.de, Web http://www.gunt.de
We reserve the right to modify our products without any notifications.

HM 140 Open-Channel Sediment Transport

*** Flow in an inclinable flume with and without bed-load transport**

*** Subcritical and supercritical flow**

*** Visualisation of flow with contrast medium**

Technical Description

HM 140 uses sand as an example to demonstrate important phenomena of bed-load transport in the area near the bottom. Open-channel flow without sediment transport is also possible. Discharge can be subcritical or supercritical.

The core element of the HM 140 experimental flume with closed water circuit is the inclining experimental section. The side walls of the experimental section are made of tempered glass, which allows excellent observation of the experiments. All components that come into contact with water are made of corrosion-resistant materials (stainless steel, glass reinforced plastic). The inlet element is designed so that the flow enters the experimental section with very little turbulence and no sediment can flow back. The tank after the water outlet contains a sediment trap for coarse sand.

The inclination of the experimental flume can be finely adjusted to produce slope and to create a uniform flow at a constant discharge depth.

In addition to bed-load transport in open channels, some models can also be used to observe fluvial obstacle marks, namely scour formation and siltation at structures. A rounded-nosed pier, a broad-crested weir or a sluice gate can be inserted into the experimental section.

The discharge is measured via a measuring weir in the water outlet and a level gauge. The level gauge is also used for profile measurement in the sediment and to determine the discharge depth at each point of the experimental section.

Ink can be injected as a contrast medium to visualise the flow conditions.

The well-structured instructional material sets out the fundamentals and provides a step-by-step guide through the experiments.

Learning Objectives / Experiments

- bed-load transport in open channels
  * subcritical and supercritical flow
  * formation of ripples, dunes and antidunes
- how flow velocity affects bed-load transport
- fluvial obstacle mark (siltation/scour formation)
  * bridge pier
  * sluice gate
- bed-load transport formulae
  * Meyer-Peter and Müller formula
  * Einstein's formula
  * determining the transport rate
- visualisation of the flow

- open-channel flow without sediment transport
  * subcritical and supercritical flow
  * control structures: sluice gate, broad-crested weir
  * discharge measurement on the sharp-crested weir

HM 140 Open-Channel Sediment Transport

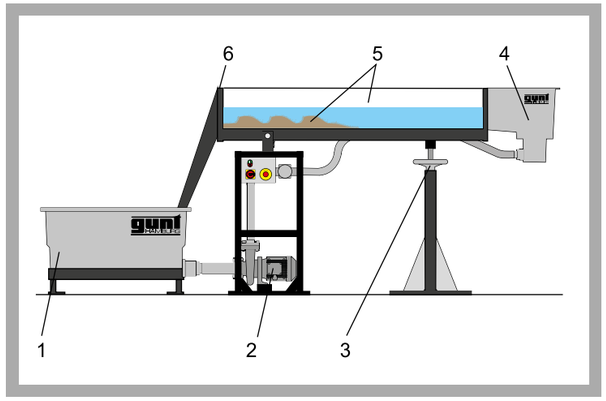

1 water tank, 2 pump, 3 inclination adjustment, 4 inlet element, 5 experimental section, 6 water outlet

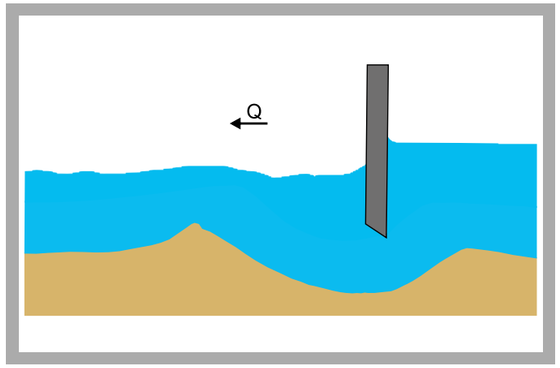

Sediment transport at the sluice gate: scour formation under the gate, siltation downstream

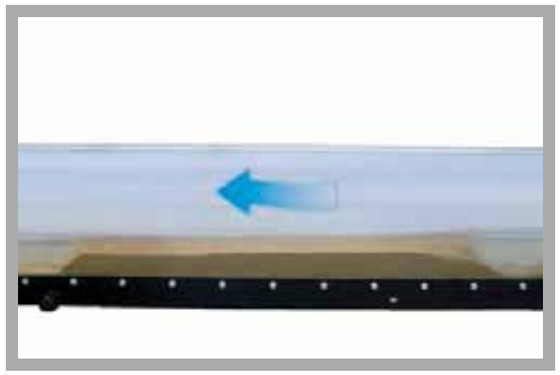

Open-channel sediment transport, observation of an emerging bed form at subcritical discharge

Specification

[1] investigation of open-channel flow with and without bed-load transport
[2] experimental flume, consisting of experimental section, inlet element, water outlet and closed water circuit
[3] smoothly adjustable inclination of the experimental section
[4] side walls of the experimental section are made of tempered glass for excellent observation of the experiments
[5] all surfaces in contact with water are made of corrosion-resistant materials
[6] flow-optimized inlet element for low-turbulence entry to the experimental section; inlet element with sediment trap to prevent sediment flowing back
[7] closed water circuit with water tank with sediment trap for coarse sand, pump and manual flow rate adjustment
[8] sluice gate, bridge pier and broad-crested weir for experiments with and without sediment transport
[9] visualisation of the flow using ink as a contrast medium
[10] discharge measurement via measuring weir in the water drain
[11] level gauge for measuring the discharge depth and the height of the sediment surface

Technical Data

Experimental section
- length: 1600mm
- flow cross-section WxH: 300x86mm
- inclination adjustment: -1...+3%

Tank: 280L
Pump
- power consumption: 1,02kW
- max. flow rate: 22,5m³/h
- max. head: 13,7m

Sediment trap filter element: 49mesh

Dimensions and Weight

LxWxH: 3450x650x1200mm
Weight: approx. 215kg

Required for Operation

230V, 50/60Hz, 1 phase or 120V, 60Hz, 1 phase
Sediment: sand (1...2mm grain size)

Scope of Delivery

1 experimental flume
1 sluice gate, 1 rounded-nosed pier, 1 broad-crested weir, 1 system for flow visualisation, 1 level gauge,
1 tool for smoothing sand
1 set of instructional material

Order Details

070.14000 HM 140 Open-Channel Sediment Transport

G.U.N.T Gerätebau GmbH, Hanskampring 15-17, D-22885 Barsbüttel, Phone +49 (40) 67 08 54-0, Fax +49 (40) 67 08 54-42, E-mail sales@gunt.de, Web http://www.gunt.de
We reserve the right to modify our products without any notifications.

HM 168 Sediment Transport in River Courses

*** Open-channel bed-load transport**
*** Observing the formation of meanders**
*** Observing fluvial obstacle marks on structures**
*** Movable point gauge for profile measurement in the sediment**

Technical Description

HM 168 demonstrates important phenomena of bed-load transport in the area near the bottom at subcritical discharge. The large dimensions of the experimental section enable the modelling of river courses with and without structure.

The core element of the HM 168 experimental flume is the stainless steel experimental section. A sediment layer up to 10cm high covering an area of 5x0,8m allows bed-load transport to be studied. The sediment is held in the experimental section by plate weirs at the inlet and at the outlet. The tank after the water drain contains a sediment trap with a filter element for sand. The water circuit is closed.

In addition to bed-load transport in open channels without structures, some models can also be used to observe fluvial obstacle marks, namely scour formation and siltation at structures. A bridge pier, a plate weir or an island can be inserted into the experimental section. You can also design your own models using deflection plates and angular steel.

Profile measurement in the sediment along the bottom and the determination of the discharge depth at each point on the experimental section is done via a movable instrument carrier and a point gauge. The discharge is measured via an electromagnetic flow meter.

The well-structured instructional material sets out the fundamentals and provides a step-by-step guide through the experiments.

Learning Objectives / Experiments

- bed-load transport in open channels
- how flow velocity affects bed-load transport
- ripple formation on the river bed
- observing the formation of meanders
- fluvial obstacle marks on structures
  * bridge pier with rectangular profile
  * rounded-nosed bridge pier
  * pointed-nosed bridge pier
  * island (round or rectangular)
- bed-load transport formulae
  * Meyer-Peter and Müller formula
  * Einstein's formula

HM 168 Sediment Transport in River Courses

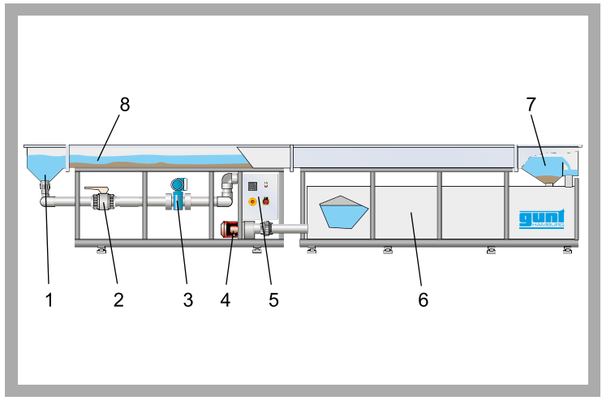

1 inlet element, 2 valve, 3 sensor for flow rate, 4 pump, 5 controls, 6 water tank, 7 outlet element with sediment trap, 8 experimental section

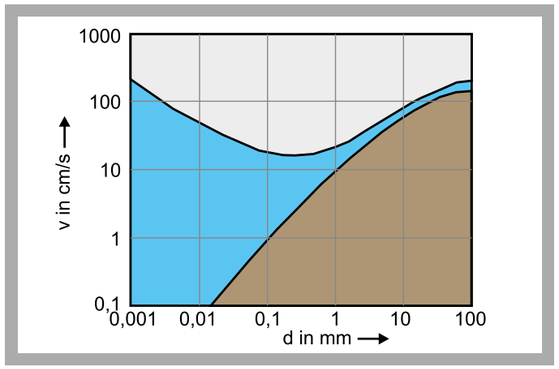

Hjulstroem diagram: d grain size, v flow velocity; grey: erosion, blue: transport, brown: deposition

Erosion and scour formation in nature

Specification

[1] open-channel bed-load transport
[2] experimental flume with experimental section, inlet element, outlet element, closed water circuit, 1 set of models
[3] closed water circuit with water tank with sediment trap, pump, and electromagnetic flow meter
[4] experimental section with grooves for plate weirs to realise different flow conditions
[5] measurement of profiles along the bottom with moveable instrument carrier and point gauge
[6] inlet element with plate weir to protect against sediment flowing back
[7] models supplied 3 bridge piers, 2 islands, set of deflection plates (for your own model ideas)
[8] sediment trap with filter element for sand
[9] experimental section, inlet and outlet element made of stainless steel

Technical Data

Experimental flume
- stainless steel
- dimensions of the experimental section: 5000x800x250mm

Pump
- power consumption: 3,6kW
- max. head: 11,5m
- max. flow rate: 74m³/h

Storage tank, content: approx. 1000L
Sediment trap filter element
- aperture size: 49mesh

Flow meter
- measuring range: 80m³/h

Dimensions and Weight

LxWxH: 6250x1000x1300mm
Empty weight: approx. 680kg

Required for Operation

400V, 50/60Hz, 3 phases or 230V, 50Hz, 3 phases
Sediment: sand (1...2mm grain size), approx. 1m³

Scope of Delivery

1 experimental flume, 1 filter element for sediment trap, 3 bridge piers, 2 islands, 8 deflection plates, 12 T-pieces + 6x angle profile
1 set of instructional material

Order Details

070.16800 HM 168 Sediment Transport in River Courses

G.U.N.T Gerätebau GmbH, Hanskampring 15-17, D-22885 Barsbüttel, Phone +49 (40) 67 08 54-0, Fax +49 (40) 67 08 54-42, E-mail sales@gunt.de, Web http://www.gunt.de
We reserve the right to modify our products without any notifications.

HM 142 Separation in Sedimentation Tanks

*** Solid/liquid separation in a sedimentation tank**

*** Visualisation of flow conditions**

Technical Description

In sedimentation tanks, solids are separated out of suspensions under the influence of gravity. For this, the density of the solid particles must be greater than that of the liquid.

With HM 142, the factors influencing the separation process in sedimentation tanks can be investigated. First a suspension of water and precipitated calcium carbonate is prepared in a tank. A pump delivers the suspension to the sedimentation tank. In the inlet area of the sedimentation tank the suspension intermingles with fresh water. The mixture flows over an inlet weir. On their way through the sedimentation tank the solids sink to the bottom. The treated water flows out by way of the weir at the sedimentation tank outlet.

The solid concentrations at the sedimentation tank inlet and outlet are determined by means of two Imhoff cones. The mass separated in the sedimentation tank can be determined from the difference between them. The flow rates of the suspension and the fresh water are adjusted by valves and indicated by flow meters. This enables the mixing ratio - and thus the solid concentration of the mixture - to be adjusted. In order to ensure a uniform mix of the suspension and prevent premature sedimentation, a portion of the suspension is fed back into the suspension tank by way of a bypass. To investigate the flow conditions, ink can be added with a piston burette to the fresh water stream as a tracer substance. The mixed-in volume of ink is entered using keys and indicated on a display. To provide enhanced observation of the flow conditions and settling processes, the sedimentation tank is made of transparent material.

A baffle plate can be positioned in the sedimentation tank to impede the flow. Its horizontal and vertical positioning in the sedimentation tank is adjustable. This enables the flow conditions and the efficiency of the separation process to be influenced.

The well-structured instructional material sets out the fundamentals and provides a step-by-step guide through the experiments.

Learning Objectives / Experiments

- learning the fundamental principle of separation of solids from suspensions in a sedimentation tank
- efficiency of the separation process dependent on
  * solid concentration of suspension
  * flow rate
  * position of baffle plate
- investigation of flow conditions dependent on
  * flow rate
  * position of baffle plate

HM 142 Separation in Sedimentation Tanks

1 Imhoff cones, 2 piston burette, 3 switch box, 4 pump, 5 suspension tank, 6 storage bin, 7 outlet, 8 sedimentation tank, 9 baffle plate, 10 flow meter (suspension), 11 flow meter (fresh water)

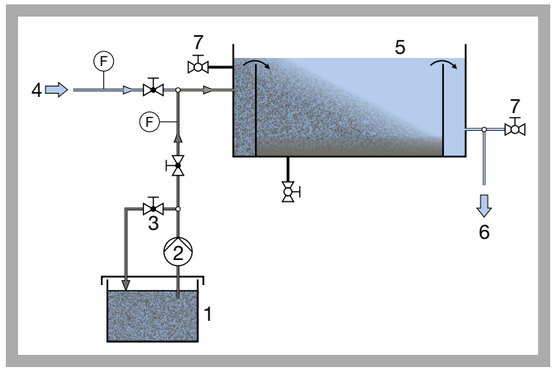

1 suspension tank, 2 pump, 3 bypass valve, 4 fresh water inlet, 5 sedimentation tank, 6 treated water outlet, 7 sampling points; F flow rate

Determination of solid concentrations at sedimentation tank inlet and outlet by Imhoff cones

Specification

[1] separation of suspensions by sedimentation in transparent sedimentation tank
[2] tank with pump to prepare and deliver a suspension comprising water and precipitated calcium carbonate
[3] bypass to tumble and homogenise the suspension
[4] mixing of the suspension with fresh water in sedimentation tank inlet zone
[5] adjustment of fresh water and suspension flow rate by valves
[6] precise piston burette for metering of ink to visualise flow conditions in the sedimentation tank
[7] influencing of flow conditions in the sedimentation tank with baffle plate that can be positioned
[8] determination of solid concentrations at sedimentation tank inlet and outlet by Imhoff cones

Technical Data

Sedimentation tank
- LxWxH: 1000x400x230mm
- capacity: approx. 80L
- material: plexiglass

Suspension tank
- capacity: approx. 90L
- material: stainless steel

Pump
- max. flow rate: 75L/min
- max. head: 5m

Piston burette
- metering accuracy: 0,15% of nominal volume
- volume adjustment range: 0...20mL
- resolution: 0,01mL

Imhoff cones
- capacity: each 1000mL

Measuring ranges
- flow rate (fresh water): 60...640L/h
- flow rate (suspension): 0...1,9L/min

Dimensions and Weight

LxWxH: 2100x790x1540mm
Weight: approx. 220kg

Required for Operation

230V, 50/60Hz, 1 phase or 120V, 60Hz, 1 phase
Water connection, drain

Scope of Delivery

1 trainer
1 piston burette
2 Imhoff cones
1 packing unit of precipitated calcium carbonate
1L ink
1 set of instructional material

Order Details

070.14200 HM 142 Separation in Sedimentation Tanks

2E a division of G.U.N.T Gerätebau GmbH, P.O.Box 1125, D-22885 Barsbüttel, t +49 (40)67 08 54-0, f +49 (40)67 08 54-42, E-mail sales@gunt.de
We reserve the right to modify our products without any notifications. Visit our Websites: www.gunt.de | www.gunt2e.de

BASIC KNOWLEDGE

SEEPAGE FLOW

In hydrology, seepage flow refers to the flow of a fluid (water) in permeable soil layers such as sand. The fluid fills the pores in the unsaturated bottom layer and moves into the deeper layers as a result of the effect of gravity. The soil has to be permeable so that the seepage water is not stored.

The permeability of the soil is described by the permeability coefficient k_f in m/s and is dependent on the grain size and the useful pore space. In less permeable soils the seepage water can be stored temporarily. If the seepage water encounters an impermeable soil layer or impermeable rock, seepage will no longer take place and the seepage water accumulates permanently. Such underground water accumulations are known as groundwater.

We talk about groundwater when the water resource is available all year round. It is called accumulated water if the water resource only occurs for part of the year, for example after the snow melts or after heavy precipitation over compressed soil layers.

Groundwater is a natural commodity that is used for drinking and mineral water. Furthermore, it represents an important buffer in the total water cycle.

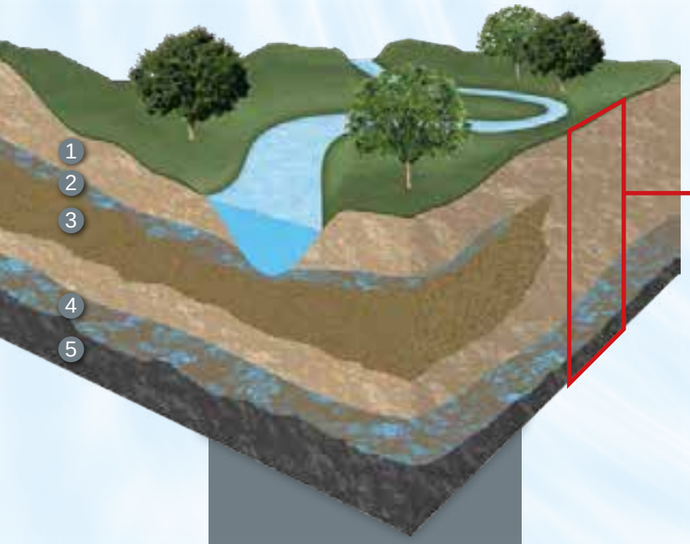

1 permeable soil layer,
2 accumulated water,
3 less permeable soil layer,
4 water-saturated soil layer (groundwater),
5 impermeable soil layer (rock)

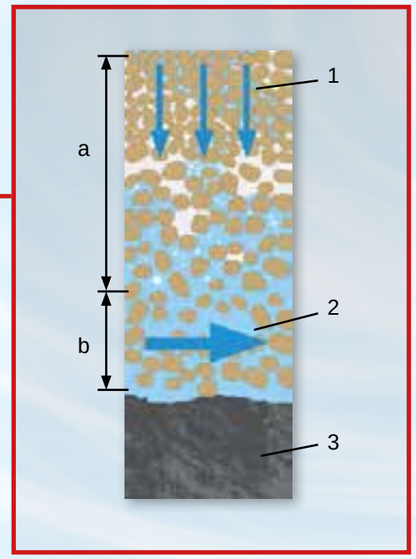

Different types of groundwater:

a water-unsaturated, aerated soil layer,
b water-saturated soil layer, all pores are filled with water;

1 seepage water,
2 groundwater,
3 impermeable soil layer (rock)

EFFECT AND USE OF SEEPAGE FLOWS

The effect of seepage flows when flowing through dams or flowing around structures in the water is a key factor in civil engineering. For example, the hydrostatic pressure that forms in the accumulated water can exert stress on structures to a large degree, such as the bouyancy in deep structures (underground garage).

Incident flow from wells or drainage facilities can also be described by the physical principles of seepage flow.

Seepage flows must not be ignored in the preservation of groundwater, in order to avoid contamination by construction, fertilizers, chemicals or mineral oils.

In engineering, flow processes such as those that occur in seepage flows are used in filter technology. In this case, fluid flows through a pore space for the purposes of cleaning or separation of media.

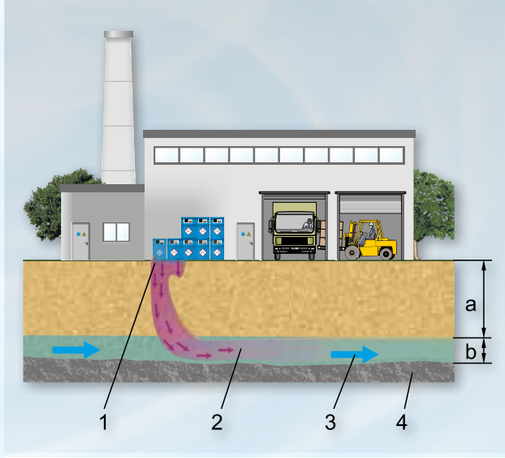

Consideration of seepage flow in the context of groundwater protection

***a** water-unsaturated soil layer, **b** water-saturated soil layer;*
***1** contaminant input and seepage, **2** contaminant plume,*
***3** groundwater flow*

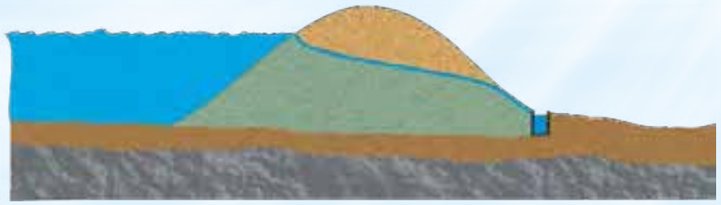

Seepage line during flow through dams

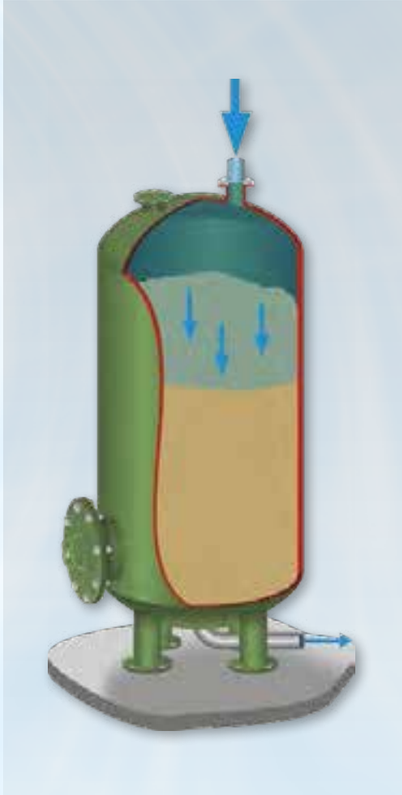

Seepage flow in filter technology

FLOW PROCESSES IN SOILS

The flow processes take place in the water-saturated soil layers, the groundwater and accumulated water, as well as above the groundwater, in the seepage water.

The cause of water movements in the soil are differences in potential. In this case, the water always moves from points of higher potential, i.e. higher potential energy, to points with lower potential. The water moves until an equilibrium between the potentials is established.

Precipitation, groundwater extraction and evapotranspiration: evaporation from the free surface and release of water vapour from plants constantly disrupt a potential equilibrium. Soil water is rarely in a static state of equilibrium. The movement of water also depends on the permeability of the soil being flowed through.

The permeability is described by the coefficient of permeability k_f in m/s and is dependent on the grain size and the useful pore space.

Coefficient of permeability k_f in m/s permeability ranges according to DIN 18130

k_f in m/s	Soil layer
$< 10^{-8}$	very slightly permeable
10^{-8} bis 10^{-6}	slightly permeable
$> 10^{-6}$ bis 10^{-4}	permeable
$> 10^{-4}$ bis 10^{-2}	highly permeable
$> 10^{-2}$	very highly permeable

MATHEMATICAL DETERMINATION OF FLOW PROCESSES

Due to the inhomogeneity of the soil flowed through, it is extremely difficult to accurately determine the flow processes. Therefore idealised conditions are assumed when calculating the flow processes. For the majority of the problems that occur, Darcy's law is sufficiently accurate.

According to Darcy, the filtration velocity ***v*** is proportional to the specific energy Δ***h*** that is removed over the length ***L***. The dimensionless variable Δ***h/L*** is denoted as the hydraulic gradient ***i***. Darcy's law is:

$$v = k_f \frac{\Delta h}{L} = k_f\, i$$

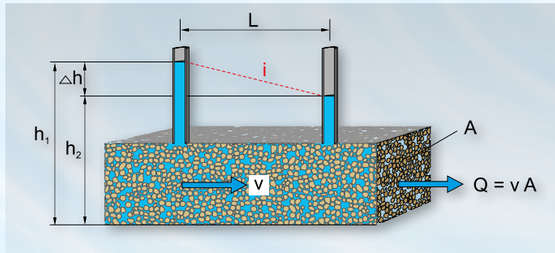

*h_1, h_2 water levels, **L** length flowed through, **i** hydraulic gradient, **v** filtration velocity, **Q** flow rate, **A** cross-sectional area flowed through*

Seepage velocity as a function of soil capacity in water-unsaturated soils

v	Soil layer	Grain size
5 m/year	gravel	2…63 mm
2-4 m/year	sand	0,063…2 mm
1 m/year	silt	0,002…0,063 mm
several cm/year	clay	< 0,002 mm

The application of Darcy's law assumes a homogeneous substrate for the entire flow area, in which there is generally a laminar flow with Reynolds numbers 1-10.

$$Re = \frac{d\,v}{\nu_{fl}} > 10$$

Re *Reynolds number,*
d *average grain diameter,*
v *velocity,*
ν_{fl} *kinematic viscosity of the fluid*

GRAPHICAL DETERMINATION OF FLOW PROCESSES

The analysis of seepage flow through a dam, a ditch for excavation or under a weir, as well as the determination of groundwater flow in sinks and sources can be done via drawings using a flow net, also known as a potential net. Darcy's law is again used as a basis for determining the flow net. The evaluation determines seepage flow rate, pressure distribution on the structure being observed and other safety considerations.

Structure of a flow net

The streamlines in a flow net are drawn in two dimensions. The potential lines connect the points with the same potential, in this case the same water levels. The streamlines run perpendicular to the potential lines, because the water flows on the shortest route from the higher potential to the low potential.

Groundwater flow around a sheet pile

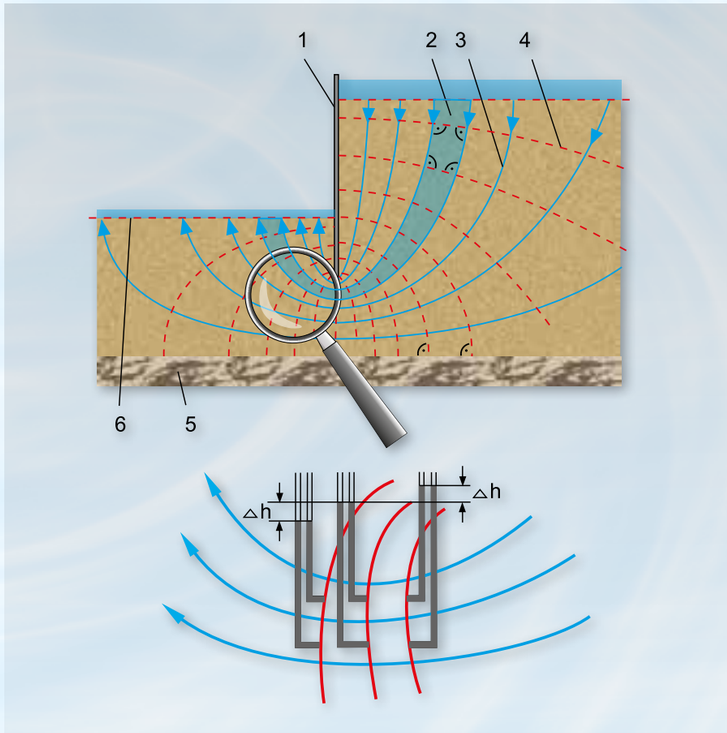

1 sheet pile,
2 flow filament,
3 streamline,
4 potential line,
5 impermeable soil layer,
6 excavation pit bottom

Analysis of seepage flow

- *streamlines,*
- *potential lines,*
- *Δ **h** difference in water levels at potential lines*

Seepage flows cannot be directly observed, since they take place in the non-visible porous medium. All of these processes can only be made "visible" by using laboratory models or with suitable measurement devices.

The GUNT experimental units in this section cover both seepage processes and groundwater levels over time. Practical problems are posed to investigate and visualise the impact of wells or ditches and the effect of structures such as retaining walls or sheet piles.

EXPERIMENTAL UNITS ON THE TOPICS OF: SEEPAGE FLOW, GROUNDWATER FLOW AND FILTRATION

BASIC EXPERIMENTS

HM 152 POTENTIAL FLOW

- simulation of two-dimensional, inviscid potential flow in a Hele-Shaw cell
- visualisation of streamlines using a contrast medium
- influence of sources and sinks on the streamlines

Flow pattern with a source

Flow pattern with a sink

HM 167 GROUND WATER FLOW

- groundwater levels over time with one and more outlets
- various models allow the study of water inrush into dikes and excavation ditches
- lowering of groundwater in excavation ditches

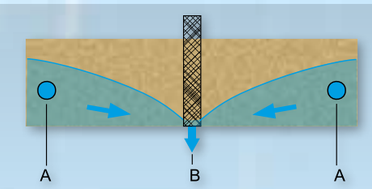

Groundwater level over time in a sand bed with one outlet

***A** water supply, **B** water drain; blue arrows: flow direction*

CE 116 CAKE AND DEPTH FILTRATION

- seepage flow in a filter
- different suspensions and filter medium layers
- application of Darcy's law to determine the filtration velocity

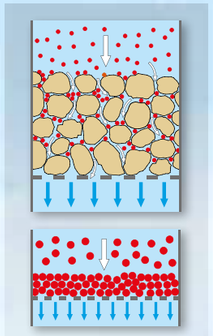

Depth filtration

Cake filtration

HM 169 VISUALISATION OF SEEPAGE FLOWS

- visualisation of streamlines in a largely 2-dimensional soil model, ink as a contrast medium
- determination of flow nets in permeable media
- determination of the pressure curves on foundation and bulkhead

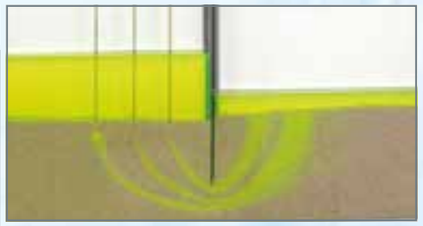

Flow net under a sheet pile

RELATIONSHIP BETWEEN PRECIPITATION, SEEPAGE AND GROUNDWATER FLOW

HM 141 HYDROGRAPHS AFTER PRECIPITATION

- precipitation-drain relationship
- precipitation time, lag time and measurement time can be adjusted via separate timers
- effect of rainwater retention basin

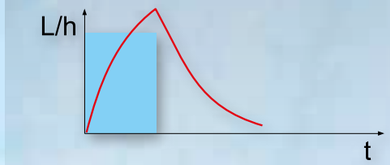

hydrograph,
precipitation

HM 165 STUDIES IN HYDROLOGY

- precipitation-drain relationship
- seepage flows and groundwater flows in soils
- supply and drain over a large area (groundwater)
- lowering of groundwater via wells and drainage

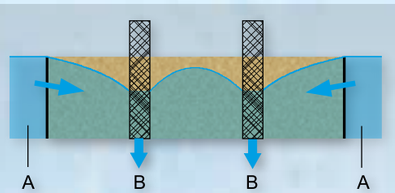

*Groundwater level over time in a sand bed with 2 wells: **A** water supply, **B** water drain through wells; blue arrows: flow direction*

HM 145 ADVANCED HYDROLOGICAL INVESTIGATIONS

- precipitation-drain relationship
- seepage flows and groundwater flows in soils
- supply and drain (groundwater and running waters) over a large area and at individual points
- lowering of groundwater via wells and drainage
- sediment transport and obstacles in running waters
- GUNT software for data acquisition of the water supplies and drains and the amount of sediment as a function of time

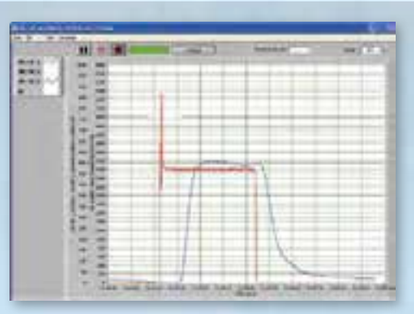

Software screenshot:

water drain for persistent rain with saturation of the soil:
precipitation,
drain

HM 152 Potential Flow

*** Two-dimensional, inviscid potential flow**

*** Visualisation of streamlines**

*** Flow around different models: drag bodies and changes in cross-section**

*** Modelling the flow around bodies by overlaying the parallel flow and sources and / or sinks**

*** Sources and sinks, individually or in combination**

Technical Description

The laminar, two-dimensional flow in HM 152 is a good approximation of the flow of ideal fluids: the potential flow. All physical systems described with the Laplace equation can be demonstrated with potential flow. This includes current and thermal flows as well as magnetic flux.

The core element of the HM 152 trainer is a classic Hele-Shaw cell with additional water connections for sources and sinks. The laminar, two-dimensional flow is achieved by water flowing at low velocity in a narrow gap between two parallel glass plates. The parallel flow generated in this way is non-vortical and can be regarded as potential flow. Sources and sinks are generated via eight water connections in the bottom glass plate. The streamlines are displayed on the glass plate by injecting a contrast medium (ink).

In experiments the flow around bodies is demonstrated by inserting models into the parallel flow. Interchangeable models such as a cylinder, guide vane profile or nozzle contour are included.

To model the flow without models, it is possible to overlay parallel flow, sources, sinks and dipoles as required. This allows the demonstration of the formation of Rankine half-bodies.

The water flow rate and the quantity of contrast medium injected can be adjusted by using valves. The water connections are also activated by valves and can be combined as required.

The well-structured instructional material sets out the fundamentals and provides a step-by-step guide through the experiments.

Learning Objectives / Experiments

- visualisation of streamlines in
  - * flow around drag bodies: cylinder, guide vane profile, square, rectangle
  - * flow through models: nozzle contour, sudden contraction or enlargement
  - * flow separation, flow with 90° deflection
- modelling the flow around bodies by overlaying parallel flow and sources and/or sinks
  - * formation of Rankine half-bodies
  - * demonstration of a dipole
- analogy between potential flow and other physical systems which are described by the Laplace equation

HM 152 Potential Flow

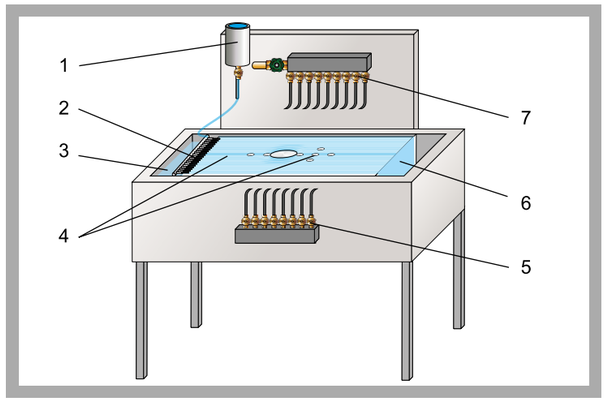

1 contrast medium, 2 nozzles for injecting the contrast medium, 3 water inlet, 4 Hele-Shaw cell with sources/sinks, 5 valves for sinks, 6 water outlet, 7 valves for sources

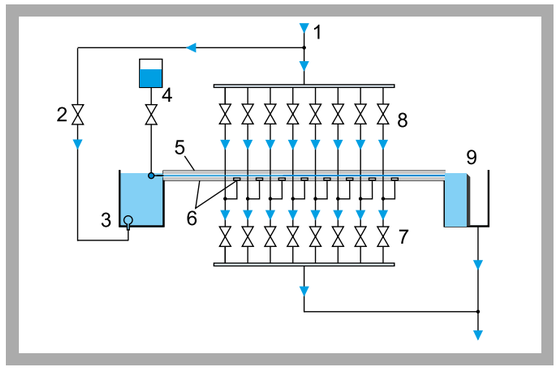

1 water inlet, 2 valve, adjusting the flow velocity, 3 tank, 4 contrast medium, 5 upper glass plate, 6 bottom glass plate with water connections (sources/sinks), 7 valves for sinks, 8 valves for sources, 9 water outlet

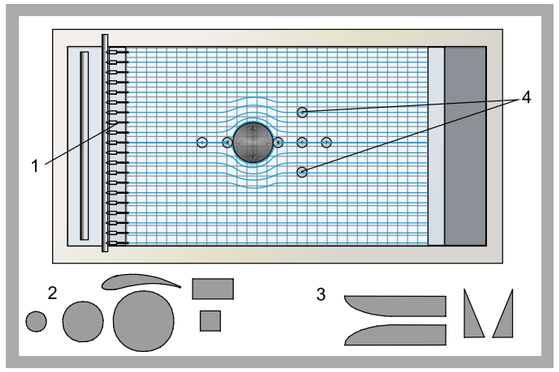

Flow around a cylinder: 1 injection of the contrast medium, 2 drag body, 3 models for changes in cross-section, 4 sources/sinks arranged in a cross shape

Specification

[1] demonstration of potential flow in a Hele-Shaw cell for visualising streamlines
[2] flow around supplied models: cylinder, square, rectangle, guide vane profile, various models for changes in cross-section
[3] modelling the flow around contours without models by overlaying parallel flow with sources or sinks
[4] water as flowing medium and ink as contrast medium
[5] Hele-Shaw cell made of two glass plates arranged in parallel with narrow gap
[6] upper glass plate, hinged for swapping models
[7] bottom glass plate with cross-shaped water connections for generating sources/sinks, can be combined as required
[8] grid in the bottom glass panel for optimal observation of the streamlines
[9] flow velocity, water inlet and water outlet in sources/sinks as well as dosage of the contrast medium can be adjusted by using valves

Technical Data

2 glass plates, LxW: 910x585mm
- distance between the plates: 5mm
- bottom glass plate with eight water connections for sources/sinks

Models
- 6 drag bodies
- 2 changes in cross-section
- material: rubber
- thickness: 5mm

Injection of the contrast medium (ink)
- 19 nozzles

Tank for contrast medium: 200mL

Dimensions and Weight

LxWxH: 1350x700x1380mm
Weight: approx. 119kg

Required for Operation

Water connection 300L/h, drain

Scope of Delivery

1 trainer
1 set of models (drag bodies, changes in cross-section)
Ink, 1L
1 set of instructional material

Order Details

070.15200 HM 152 Potential Flow

G.U.N.T Gerätebau GmbH, Hanskampring 15-17, D-22885 Barsbüttel, Phone +49 (40) 67 08 54-0, Fax +49 (40) 67 08 54-42, E-mail sales@gunt.de, Web http://www.gunt.de
We reserve the right to modify our products without any notifications.

HM 165 Studies in Hydrology

*** Precipitation-drain relationship**

*** Seepage flows and groundwater flows in soils**

*** Supply and drain over a large area**

Technical Description

In civil engineering, studies in hydrology are conducted in connection with the design, construction and operation of hydraulic engineering systems and water management functions. These studies focus on topics such as seepage and flow of water in the soil and the use of groundwater resources.

HM 165 can be used to study seepage and groundwater flows after precipitation. Variable precipitation density and areas and different groundwater supply and drain possibilities allow a wide variety of experiments.

HM 165 contains a closed water circuit with storage tank and pump. The core element is a sand-filled, stainless steel experiment tank with inclination adjustment. To study precipitation, a precipitation device is available. The precipitation device consists of two groups of four nozzles. Water can flow in (groundwater) or out (drainage) via two chambers on the side. The experiment tank is separated from the chambers by fine mesh screens. To study the lowering of groundwater, two wells with open seam tubes are available. Water supply and water drain can be opened and closed, thus allowing a wide variety of experimental conditions.

At the bottom of the experiment tank there are measuring connections to detect groundwater levels, which are displayed on 19 tube manometers. The water supply is controlled by a valve and read on a flow meter. The water drain is determined by a measuring weir.

The well-structured instructional material sets out the fundamentals and provides a step-by-step guide through the experiments.

Learning Objectives / Experiments

- investigating transient processes
  - * effect of rainfall of varying duration on the discharge
  - * storage capacity of a soil
- investigating steady processes
  - * investigating seepage flow
  - * effects of wells on the groundwater level over time

HM 165 Studies in Hydrology

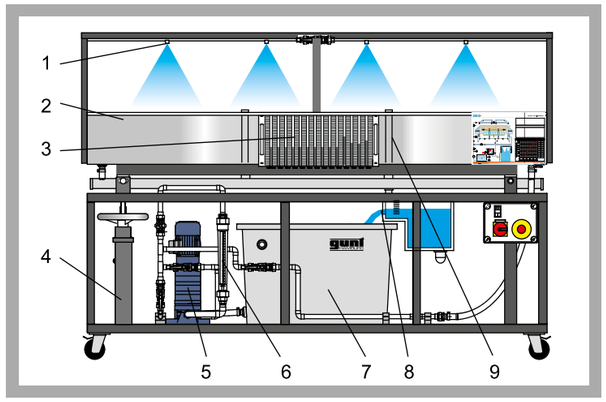

1 nozzle of the precipitation device, 2 experiment tank, 3 tube manometers, 4 inclination adjustment, 5 pump, 6 flow meter (supply), 7 storage tank, 8 measuring tank (drain), 9 well

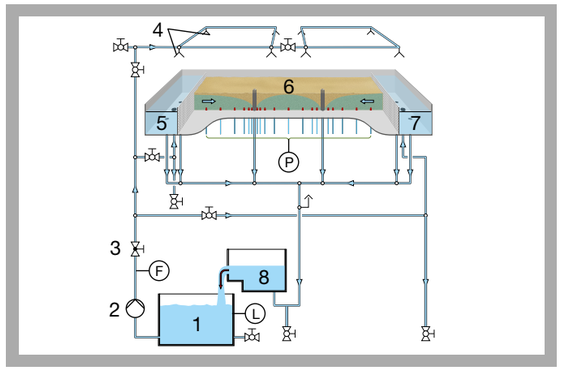

1 storage tank, 2 pump, 3 solenoid valve 4 nozzle, 5 chamber, 6 experiment tank, 7 chamber, 8 measuring tank; L level, F flow rate, P pressure

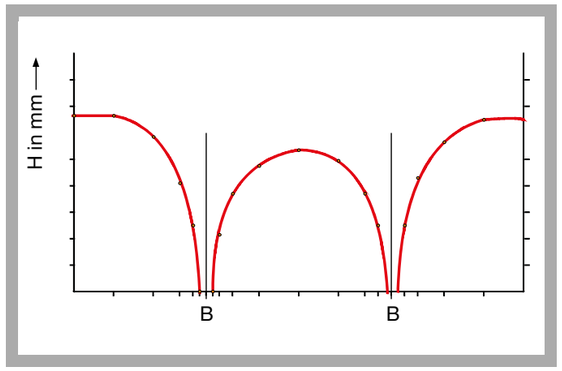

Lowering of groundwater over 2 wells; B well, H groundwater level

Specification

[1] investigation of precipitation-discharge relationships, storage capacity of soils, seepage flows and groundwater flows
[2] closed water circuit
[3] inclinable stainless steel experiment tank contains 19 measuring connections to detect groundwater levels, transparent splash guard and screens for separating the chambers
[4] 2 wells with open seam tubes in the experiment tank
[5] precipitation device with 8 nozzles, adjustable
[6] water supplies and drains can be selected individually
[7] transparent measuring tank (flow)
[8] instruments: tube manometers (groundwater), flow meter (supply) and measuring weir in the measuring tank (drain)

Technical Data

Experiment tank
- area: 2x 1m², depth: 0,2m
- max. sand filling: 0,3m³
- inclination adjustment: -2,5...5%

Precipitation device
- 8 nozzles, switchable in 2 groups of 4 nozzles
- flow rate per nozzle: 1...4,7L/min, square spray pattern

Pump
- power consumption: 0,55kW
- max. flow rate: 2000L/h

Storage tank, stainless steel: content 180L

Measuring ranges
- 19 tube manometers: 0...300mmWC
- flow rate (feed): 150...1700L/h
- flow rate (outlet): 0...1700L/h

Dimensions and Weight

LxWxH: 2400x1100x1800mm
Empty weight: approx. 310kg

Required for Operation

230V, 50/60Hz, 1 phase or 120V, 60Hz/CSA, 1 phase; sand (1...2mm grain size)

Scope of Delivery

1 trainer
1 set of instructional material

Order Details

070.16500 HM 165 Studies in Hydrology

2E a division of G.U.N.T Gerätebau GmbH, P.O.Box 1125, D-22885 Barsbüttel, t +49 (40)67 08 54-0, f +49 (40)67 08 54-42, E-mail sales@gunt.de
We reserve the right to modify our products without any notifications. Visit our Websites: www.gunt.de | www.gunt2e.de

HM 167 Ground Water Flow

*** Investigation of groundwater flows**
*** Demonstration of lowering of groundwater**
*** Investigation of excavation pits**

Technical Description

Groundwater flows consider, among other things, the extraction of groundwater from wells and excavation pits. An understanding of the hydrological principles of groundwater flow is useful when designing reliable structures such as excavation pits or drainage systems.

HM 167 allows three-dimensional investigations of groundwater flows. The trainer consists of a tank with a sand filling. Various models can be placed in the sand bed.

The water is supplied to the tank via two horizontal open-seam tubes that can be activated separately via valves. This results in various experiment possibilities with flowing groundwater. The investigation of various extractions is facilitated by two wells with open-seam tubes, which are also activated individually via valves. Three different models allow the study of excavation pits.

At the bottom of the tank there are orthogonally arranged measuring connections to detect groundwater levels. Groundwater levels are displayed on 19 tube manometers.

The well-structured instructional material sets out the fundamentals and provides a step-by-step guide through the experiments.

Learning Objectives / Experiments

- determining the groundwater level
- lowering of groundwater level via two wells
- groundwater flow on excavation pits
- groundwater studies under concentric load on the substrate

HM 167 Ground Water Flow

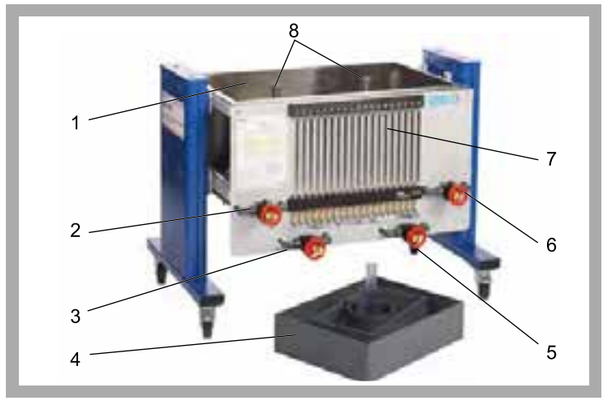

1 tank, 2 water supply, 3 water drain, 4 models, 5 water drain, 6 water supply, 7 tube manometers, 8 water drain via open-seam tube (well)

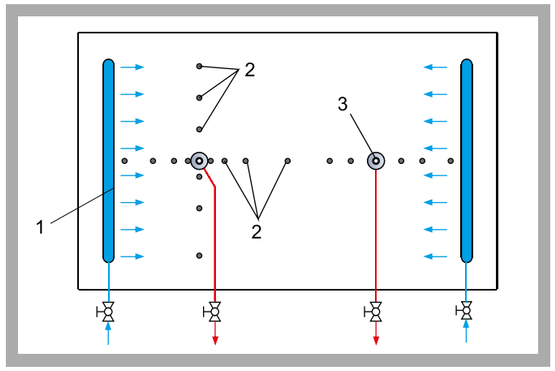

Arrangement of the measuring points and wells
1 water inlet via open-seam tube, 2 measuring points, 3 water drain via open-seam tube (well); blue: water inlet, red: water drain

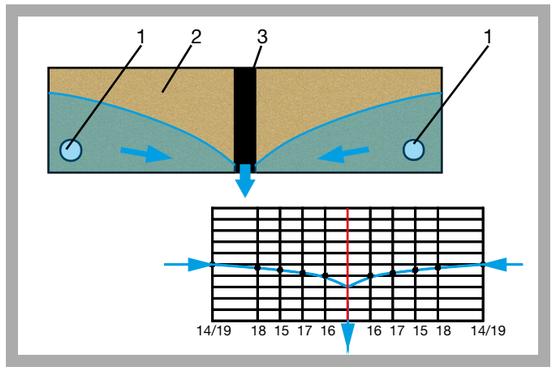

Groundwater level over time with one well: 1 water inlet via open-seam tube, 2 sand bed, 3 well with open-seam tube;
Diagram: blue: groundwater level over time, red: well, 14-19 measuring points on the bottom in the sand bed

Specification

[1] investigation of groundwater flows
[2] stainless steel tank as experimental section to be filled with coarse sand
[3] water supply via 2 open-seam tubes
[4] water drain via 2 wells with open-seam tubes in the experimental section
[5] water feeds and discharges can be adjusted separately via valves
[6] 19 measuring connections with filters to detect the groundwater levels, arranged orthogonal to the tank bottom
[7] 2 different models for excavation pits
[8] 1 model for structure with waterproof bottom
[9] groundwater levels displayed on the 19 tube manometers

Technical Data

Tank
- material: stainless steel
- content, LxWxH: 1000x615x350mm
- 19 measuring connections on the bottom of the tank

Tube manometers
- number of tubes: 19
- measuring range: 300mmWC

Plastic models
- excavation pit, LxWxH: 610x464x150mm
- excavation pit, LxWxH: 256x464x150mm
- structure with waterproof bottom, DxH: 180x150mm, inner tube DxH: 40x330mm

Dimensions and Weight

LxWxH: 1340x900x1000mm
Empty weight: approx. 125kg

Required for Operation

Water connection, drain
Sand (1...2mm grain size)

Scope of Delivery

1 trainer
3 models
1 set of hoses
1 set of instructional material

Order Details

070.16700 HM 167 Ground Water Flow

2E a division of G.U.N.T Gerätebau GmbH, P.O.Box 1125, D-22885 Barsbüttel, t +49 (40)67 08 54-0, f +49 (40)67 08 54-42, E-mail sales@gunt.de
We reserve the right to modify our products without any notifications. **Visit our Websites: www.gunt.de | www.gunt2e.de**

HM 169 Visualisation of Seepage Flows

*** Visualisation of two-dimensional seepage and groundwater flows**

*** Investigation of the water pressure on structures**

*** Closed water circuit**

Technical Description

A descriptive method in the study of seepage and groundwater flow is the visualisation of the streamlines and their graphical representation as a flow net. The flow net provides information about the seepage of water in dams and sheet piles.

HM 169 can be used to visualise streamlines in seepage and groundwater flow on different models using a contrast medium. Furthermore, the effects of water pressure on different structures are displayed as pressure curves.

The trainer consists of a transparent tank with a sand filling. Various models can be placed in the sand bed to demonstrate typical structures. The experimental section is separated from the feed and discharge chambers by fine mesh screens. A valve is used to adjust the water supply. Using a contrast medium it is possible to make streamlines visible, as they occur in seepage and groundwater flow. A tempered glass viewing window allows for optimal observation of the experiments.

Various models allow an extensive range of experiments, such as pressure distribution on retaining walls or seepage and groundwater flow under sheet piles. The "foundation" and "retaining wall" models are equipped with tubes to show the pressures on the models.

In the experimental section there are measuring connections to detect groundwater levels. Groundwater levels are displayed on 14 tube manometers.

HM 169 contains a closed water circuit with storage tank and pump.

The well-structured instructional material sets out the fundamentals and provides a step-by-step guide through the experiments.

Learning Objectives / Experiments

- determining flow nets in permeable media graphically
  - * streamlines under a sheet pile
  - * streamlines through an earth dam
  - * drainage at an open ditch
- determining the pressure curve at a foundation
- determining the pressure curve at a retaining wall
- groundwater levels over time in various models

HM 169 Visualisation of Seepage Flows

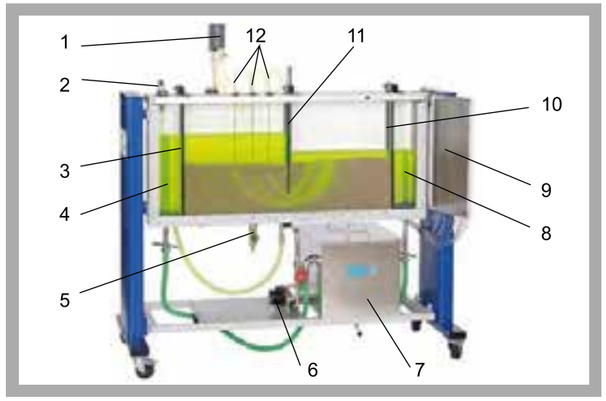

1 tank for contrast medium, 2 water supply, 3 screen, 4 overflow, 5 drain, 6 pump, 7 storage tank, 8 overflow, 9 panel with tube manometers, 10 screen, 11 "sheet pile" model, 12 lances for injecting the contrast medium

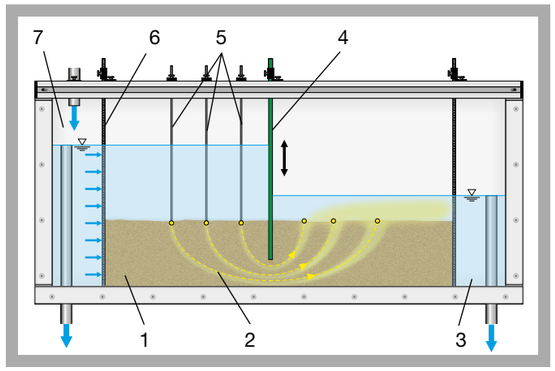

Streamlines under a sheet pile
1 sand bed, 2 streamlines, 3 discharge chamber, 4 height-adjustable sheet pile, 5 lances for injecting the contrast medium, 6 screen, 7 feed chamber

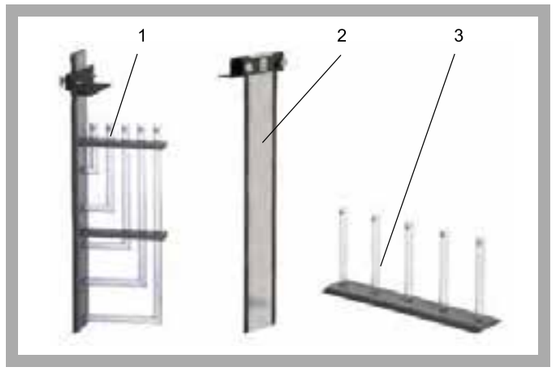

Models supplied: 1 "retaining wall" model, 2 "sheet pile" model, 3 "foundation" model

Specification

[1] visualisation of two-dimensional seepage flows and investigation of water pressure at various models
[2] closed water circuit
[3] fluoresceine as a contrast medium
[4] experimental section with tempered glass viewing window
[5] fine-mesh screen to separate the experimental section from the feed and discharge chamber
[6] height-adjustable overflows in the feed and discharge to adjust the water levels
[7] 14 measuring connections with filters to detect the groundwater levels in the experimental section
[8] "sheet pile" model for visualisation of streamlines
[9] "retaining wall" and "foundation" models for demonstration of the water pressure
[10] instruments: tube manometers, tubes on the "foundation" and "retaining wall" models

Technical Data

Experimental section
- usable volume: 82L
- LxWxH: 1480x104x630mm

Pump
- max. flow rate: 4m³/h
- max. head: 4m

14 tube manometers: 0...600mmWC
Tank for contrast medium: content 0,5L
Storage tank, stainless steel: content 96L
Models
- "sheet pile"
- "retaining wall"
- "foundation"

Dimensions and Weight

LxWxH: 1900x800x1870mm
Weight: approx. 230kg

Required for Operation

230V, 50/60Hz, 1 phase or 120V, 60Hz/CSA, 1 phase; sand (1...2mm grain size)

Scope of Delivery

1 trainer
3 models
1L contrast medium
1 set of instructional material

Order Details

070.16900 HM 169 Visualisation of Seepage Flows

2E a division of G.U.N.T Gerätebau GmbH, P.O.Box 1125, D-22885 Barsbüttel, t +49 (40)67 08 54-0, f +49 (40)67 08 54-42, E-mail sales@gunt.de
We reserve the right to modify our products without any notifications. Visit our Websites: www.gunt.de | www.gunt2e.de

HM 145 Advanced Hydrological Investigations

*** Seepage flows and groundwater flows in soils**

*** Supply and drain (groundwater and running waters) over a large area and at individual points**

*** Sediment transport and obstacles in running waters**

Technical Description

HM 145 can be used to study seepage and groundwater flows after precipitation. Furthermore, sediment transport in courses of rivers is also presented in the context of flow obstacles. Variable precipitation density and areas and different groundwater supply and drain possibilities allow a wide variety of experiments.

HM 145 contains a closed water circuit with storage tank and pump. The core element is a sand-filled, stainless steel experiment tank with inclination adjustment. To study precipitation, a precipitation device is available, which is equipped with a timer to define the times of precipitation. The precipitation device consists of two groups of four nozzles. Water can flow in (groundwater) or out (drainage) via two chambers on the side. The experiment tank is separated from the chambers by fine mesh screens. To study the lowering of groundwater, two wells with open seam tubes are available. By means of a small weir in the in the supply and drain, a course of a river can be generated. Different water levels can be generated. Water supply and water drain can be opened and closed, thus allowing a wide variety of experimental conditions. In addition, three different models make it possible to study the flow around obstacles and the resulting sediment transport in the river bed.

At the bottom of the experiment tank there are measuring connections to detect groundwater levels, which are displayed on 19 tube manometers. Two flow meters with different measuring ranges indicate the supply to the experiment tank. A measuring tank at the drain contains a measuring weir for determining the water level and a force sensor for determining the amount of sediment.

The measured values are indicated at the trainer. At the same time, the measured values can also be transmitted directly to a PC via USB. The data acquisition software is included.

The well-structured instructional material sets out the fundamentals and provides a step-by-step guide through the experiments.

Learning Objectives / Experiments

- investigating transient processes
  - * effect of rainfall of varying duration on the discharge
  - * storage capacity of a soil
- investigating steady processes
  - * seepage flow
  - * effects of wells on the groundwater level over time
- flow behaviour of rivers, obstacles in the river bed, sediment transport in rivers

HM 145 Advanced Hydrological Investigations

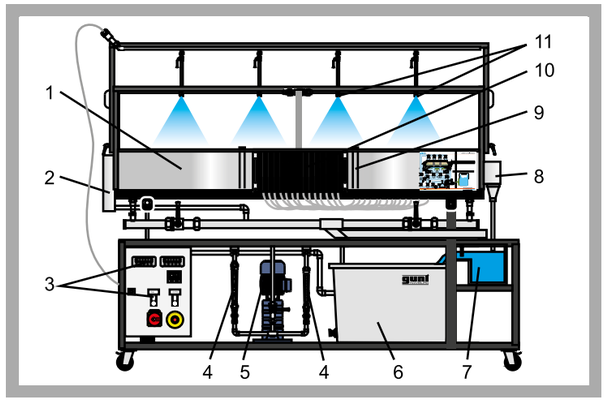

1 experiment tank, 2 chamber, 3 display and control elements, 4 flow meter(supply), 5 pump, 6 storage tank, 7 measuring tank (drain), 8 chamber, 9 well, 10 tube manometers, 11 nozzles of the precipitation device

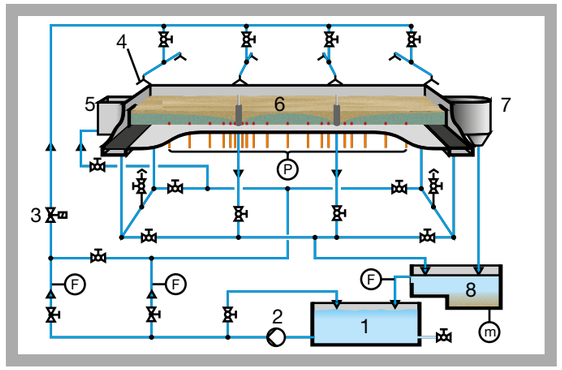

1 storage tank, 2 pump, 3 solenoid valve with timer, 4 nozzle, 5 chamber, 6 experiment tank, 7 chamber, 8 measuring tank; m mass, F flow rate, P pressure

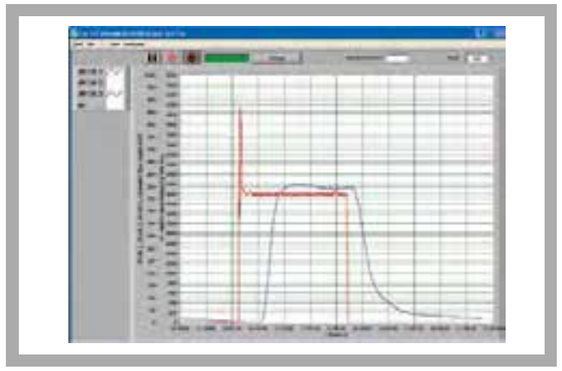

Software screenshot: water drain for persistent rain with saturation of the soil: red precipitation, blue drain

Specification

[1] investigation of precipitation-discharge relationships, storage capacity of soils, seepage flows, groundwater flows and sediment transport
[2] closed water circuit
[3] inclinable stainless steel experiment tank contains 19 measuring connections to detect groundwater levels, transparent splash guard and screens for separating the chambers
[4] 2 wells with open seam tubes in the experiment tank
[5] precipitation device with 8 nozzles, adjustable
[6] precipitation time can be adjusted via timer
[7] water supplies and drains can be selected individually
[8] transparent measuring tank (flow) and force sensor (determining the amount of sediment)
[9] 3 models for pillars: round, square, oval
[10] instruments: tube manometers (groundwater), flow meter (2x at the supply) and measuring weir in the measuring tank (1x at the drain)
[11] GUNT software for data capture via USB under Windows Vista or Windows 7

Technical Data

Experiment tank, inclination adjustment: -1...5%
- area: 2x1m², depth: 0,2m, max. sand filling: 0,3m³

Precipitation device
- 8 nozzles, switchable in 4 groups of 2 nozzles
- flow rate: 1...4,7L/min, square spray pattern

Pump
- power consumption: 0,55kW
- max. flow rate: 1500L/h

Storage tank, stainless steel: content 220L

Measuring ranges
- 19 tube manometers: 300mmWC
- flow rate (supply): 0...1050L/h, 0...320L/h
- flow rate (drain): 0...1000L/h
- mass/sediment: 0...5000g

Dimensions and Weight

LxWxH: 2300x1100x1950mm
Empty weight: approx. 350kg

Required for Operation

230V, 50/60Hz, 1 phase or 120V, 60Hz, 1 phase; sand (1...2mm grain size)

Scope of Delivery

1 trainer, 3 models (pillars)
1 CD with GUNT software + USB cable
1 set of instructional material

Order Details

070.14500 HM 145 Advanced Hydrological Investigations

G.U.N.T Gerätebau GmbH, Hanskampring 15-17, D-22885 Barsbüttel, Phone +49 (40) 67 08 54-0, Fax +49 (40) 67 08 54-42, E-mail sales@gunt.de, Web http://www.gunt.de
We reserve the right to modify our products without any notifications.

HM 141 Hydrographs after Precipitation

Technical Description

Hydrographs are an important tool for the representation of hydrological data such as precipitation, groundwater levels or discharges.

HM 141 produces precipitation of varying duration and intensity. The storage capacity of soils with different saturation is also examined. Using various dewatering is examined it is possible to demonstrate the relationships between precipitation and seepage.

The trainer includes a tank with a sand filling, which is flowed through by water. The water is supplied to the tank via a precipitation device with two nozzles that can be adjusted separately via valves. To study different drainages, the water is drained either via a drainage pipe or a drain chamber, which is separated from the experimental section by a screen.

The draining water is distributed over 17 transparent chambers. This creates a profile over time of the water drain. The water levels are measured and plotted in a hydrograph.

Drip pans can be used to demonstrate the lag of the drainage through rainwater retention basins.

The water supply is controlled by a valve and read on a flow meter. The timed discharges are adjusted via electronic timers.

The well-structured instructional material sets out the fundamentals and provides a step-by-step guide through the experiments.

Learning Objectives / Experiments

- effect of precipitation of varying duration or intensity on soils with different saturation
- record hydrographs after precipitation
- storage capacity of soils with different saturation
- compare natural dewatering with dewatering via drainage pipe
- influence of rainwater retention basin on the hydrograph

*** Effect of precipitation on soils**

*** Drainage of the soil either through drainage pipe or drain chamber with screen**

*** Recording of hydrographs**

*** Influence of rainwater retention basin on the hydrograph**

*** Precipitation time, lag time and measurement time can be adjusted via separate timers**

HM 141 Hydrographs after Precipitation

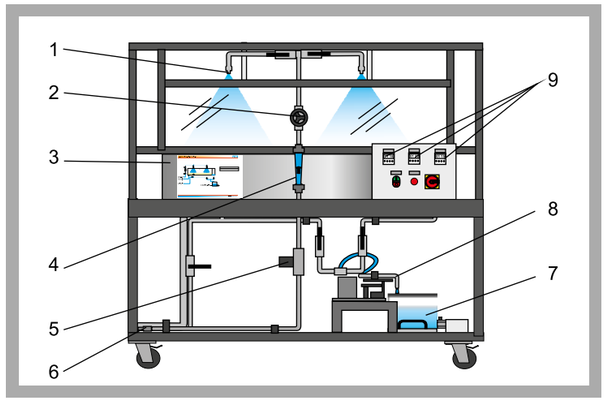

1 nozzle, 2 flow adjustment nozzles, 3 experimental tank with sand, 4 flow meter, 5 solenoid valve, 6 water supply, 7 measuring tank with 17 chambers, 8 water drain on mobile sled, 9 timers for precipitation time, lag time and measurement time

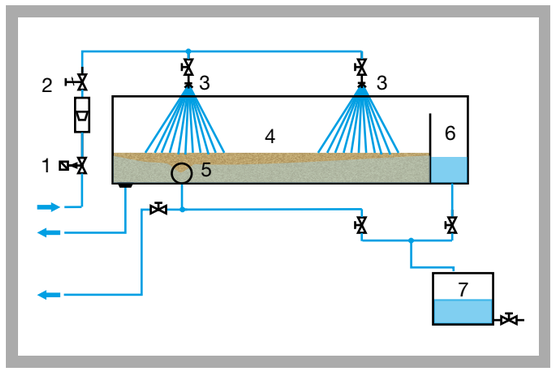

1 solenoid valve with timer, 2 flow meter, 3 nozzle, 4 experimental section with sand, 5 drainage pipe, 6 removable drain chamber with screen, 7 measuring tank

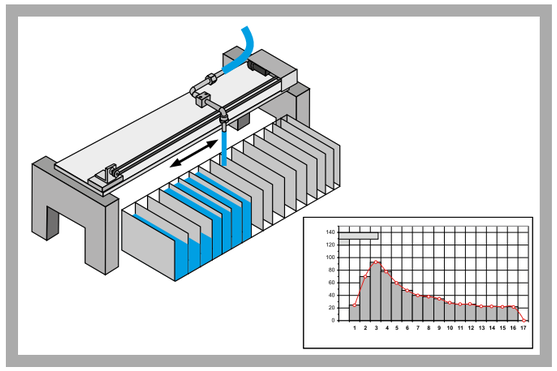

Water drain on a mobile sled and measuring tank;
Diagram shows the release of water over time

Specification

[1] investigation of the effect of precipitation on soils
[2] stainless steel experimental tank with transparent splash guard
[3] precipitation device with two nozzles, adjustable precipitation area and quantity
[4] precipitation time can be adjusted via solenoid valve with timer
[5] distribution to 17 chambers by timer
[6] mobile sled carriage distributes draining water to 17 chambers in the measuring tank
[7] water drain either via removable drain chamber with fine-mesh screen or via drainage pipe
[8] separate flushing connection for pipelines
[9] drip pans as rainwater retention basins
[10] rotameter (inlet), indicator of precipitation time, lag time and measurement time

Technical Data

Experimental section
- volume: 1300x600x200mm
- max. sand height: 185mm

Precipitation device
- 2 nozzles, individually adjustable
- flow rate: 1...6,7L/min, square spray pattern
- precipitation: max. 320L/h

Measuring tank with 17 chambers
- volume: 17x0,9L

Timers
- precipitation: max. 99min59s
- lag time until start of measurements: max. 99min59s
- measurement time per chamber: max. 99min59s

4 drip pans: 305x215x55mm
Steel scale: 200mm

Measuring range
- flow rate: 30...320L/h

Dimensions and Weight

LxWxH: 1600x1000x1475mm
Weight: approx. 195kg

Required for Operation

230V, 50/60Hz, 1 phase or 120V, 60Hz/CSA, 1 phase; sand (1...2mm grain size)
Water connection, water drain

Scope of Delivery

1 trainer, 4 drip pans, 1 set of hoses, 1 set of instructional material

Order Details

070.14100 HM 141 Hydrographs after Precipitation

2E a division of G.U.N.T Gerätebau GmbH, P.O.Box 1125, D-22885 Barsbüttel, t +49 (40)67 08 54-0, f +49 (40)67 08 54-42, E-mail sales@gunt.de
We reserve the right to modify our products without any notifications. **Visit our Websites: www.gunt.de | www.gunt2e.de**

CE 116 *Cake and Depth Filtration*

*** Cake and depth filtration with different suspensions and filter medium layers**

Technical Description

With CE 116 the processes in depth filtration and cake filtration can be observed and investigated. The suspension (water and diatomite as the solid) flows from the hopper into the top of the filter element, where the solids are separated off. The filtrate flows through a flow meter into the drain. The filter element has a porous filter medium at the bottom. In cake filtration, the filter medium provides the foundation for build-up of the filter cake. In depth filtration, the filter medium supports the bulk solids (filter medium layer; gravel). Twin tube manometers measure the pressure loss over the filter element.

The well-structured instructional material sets out the fundamentals and provides a step-by-step guide through the experiments.

Learning Objectives / Experiments

- fundamentals of filtration: Darcy's equation
- depth filtration with different bulk solids and suspensions
- cake filtration with different suspensions
- identification of characteristic filtration values

Specification

[1] fundamentals of cake and depth filtration
[2] filter element with sintered filter medium on its bottom to capture the particles
[3] pressure loss measurement with twin tube manometers
[4] height-adjustable filler hopper made of DURAN glass
[5] flow meter with needle valve for adjustment

Technical Data

Filter element
- filter chamber height: 85mm
- inside diameter: approx. 37mm
- cross-sectional area: approx. 11cm²
- tube material: DURAN glass

Filter medium, sintered filter SIKA 100
- pore size: 100µm
- thickness: 2mm
- material: sintered metal

Measuring ranges
- flow rate: 40...360mL/min
- pressure: 2x 0...500mmWC
- temperature: -10...100°C
- measuring cups
  1x 1000mL, scale division: 10mL
  1x 100mL, scale division: 2mL

Dimensions and Weight

LxWxH: 450x410x1040mm
Weight: approx. 30kg

Required for Operation

Drain recommended,
balance to register the filtrate quantity

Scope of Delivery

1 experimental unit
2 measuring cups
1 stopwatch
1 thermometer
1kg sand (1...2mm)
2kg diatomite
1 set of instructional material

Order Details

083.11600 CE 116 Cake and Depth Filtration

G.U.N.T Gerätebau GmbH, Hanskampring 15-17, D-22885 Barsbüttel, Phone +49 (40) 67 08 54-0, Fax +49 (40) 67 08 54-42, E-mail sales@gunt.de, Web http://www.gunt.de
We reserve the right to modify our products without any notifications.

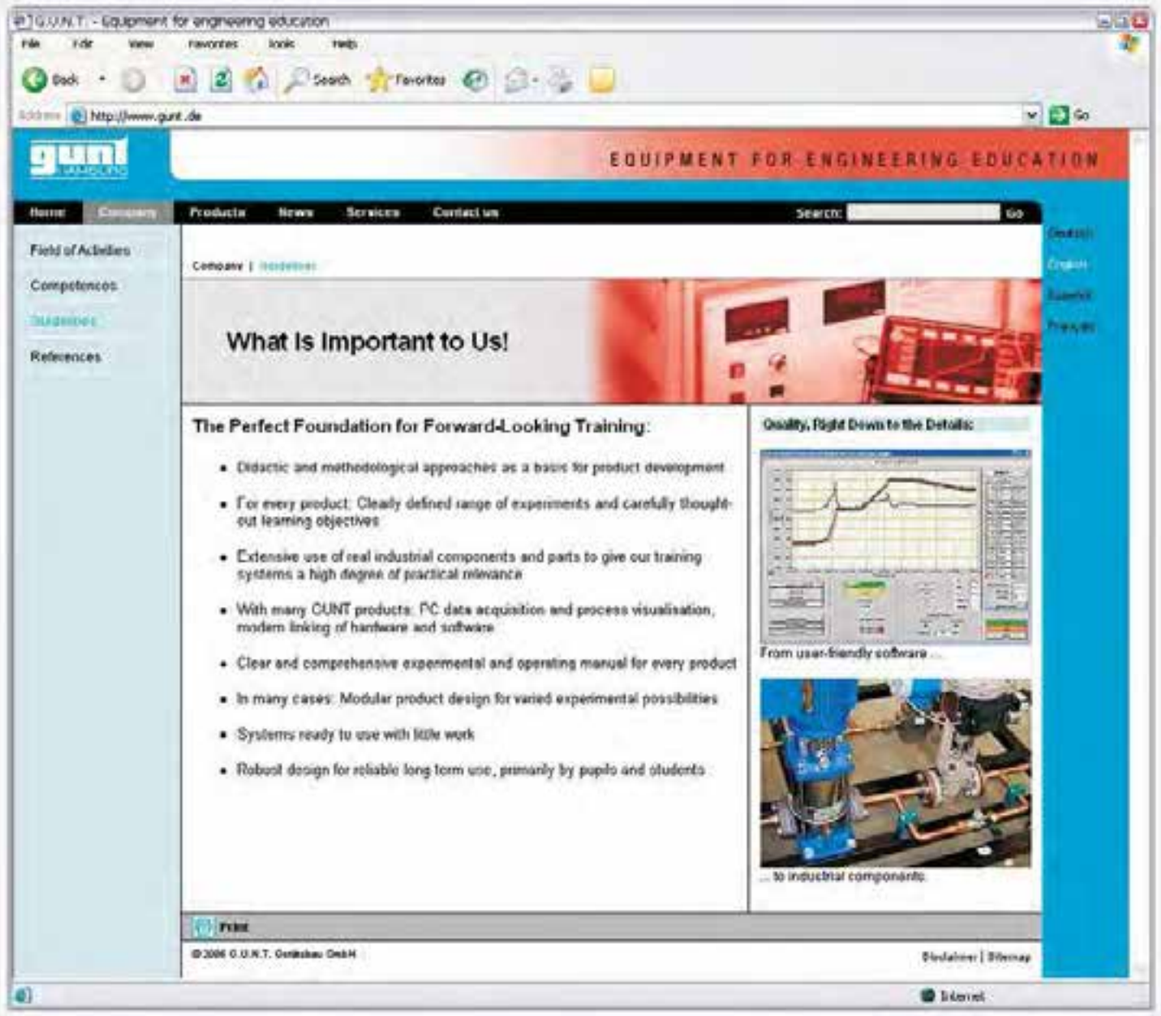

Visit our website, where you will find all you need to know, including all the latest news.
www.gunt.de

INDEX BASIC KNOWLEDGE OPEN-CHANNEL FLOW

KEYWORD	PAGE
A	
Alternate depth	74
Area of flow	71
B	
Backwater	83, 91, 93
Backwater surge	80
Basic triangle of weir	85
Bed pitching	84
Bed structure	97
Bed-load transport	97
Bernoulli's equation	73, 74
Bottom slope	72
Breaking wave	98
Broad-crested weir	78, 85, 89
C	
Calculation of discharge	86, 88, 94, 95
Change in cross-section	93
Chosen design discharge	85
Chute block	83
Cipoletti	95
Conservation of energy	73
Consideration of energy head	73, 74
Continuity equation	73, 74, 80, 91
Control structure	84 – 92
Control structure, fixed	84 – 87, 90
Control structure, moveable	84, 91
Coupled vibration	96
Critical depth	74, 78
Critical discharge	74, 78, 84
Crossing structure	92
Crump weir	89
Culvert	92
Culvert, full flow through	92
Culvert, partially filled	92
Culvert, submerged	92
D	
Damming body	84, 85, 90
Darcy-weisbach	72
Deep water	98
Depth, alternate	74
Depth, sequent	75
Design discharge	85, 87
Discharge capacity	90
Discharge coefficient	86, 91, 95
Discharge control	91, 92
Discharge curve	94
Discharge depth	70, 71, 72
Discharge measurement	84, 94, 95
Discharge pressure	90
Discharge surge	80
Discharge type	92
Discharge, critical	70, 74, 77, 78
Discharge, free	88, 91, 94, 95
Discharge, non-uniform	70, 74
Discharge, steady	74
Discharge, subcritical	70, 77, 78, 93
Discharge, submerged	84, 88, 91
Discharge, supercritical	70, 77, 78, 82, 93
Discharge, uniform	70, 72, 89
Downstream negative surge	80
Dune formation	97
Dynamic motive force	75
E	
Effect of waves	98
Elevation	72
Energy dissipation	82, 83
Energy grade line	71, 72
Erosion of the bottom	82
F	
Fill surge	80
Fixed control structure	84 – 87, 90
Flood overflow	85, 87, 90
Flow cross-section	83, 93, 94, 97
Flow formula	72
Flow transition	74, 85, 92, 93, 94
Flow velocity	72, 74, 77, 78, 80, 97
Flow-induced vibrations	96
Flow-measuring flume	94
Flume bottom	71, 72, 82, 83, 97
Flume width	71
Flume, Parshall	94
Flume, trapezoidal	94
Flume, Venturi	94
Free nappe	87
Friction loss	72, 73, 89
Froude number	77 – 79, 83
Full flow through culvert	92
G	
Gate	81, 84, 91
Gate opening	91
Grade line	72
H	
Height of weir	82, 84, 88, 89, 95
Hydraulic jump	74, 75, 76, 79
Hydraulic jump, oscillating	79
Hydraulic jump, steady	79
Hydraulic jump, strong	79
Hydraulic jump, undulating	79
Hydraulic jump, weak	79
Hydraulic radius	70, 72
Hydraulically efficient profile	70, 85
Hydrodynamic overfall	86, 87
J	
Jet contraction	91
K	
Karman vortex street	96
L	
Lateral weir	86
Local losses	93
Loss of specific energy	74 – 76, 82, 93
M	
Manning-Strickler	72
Measuring weir	85, 86, 89, 95
Momentum equation	75, 76
Motive force, dynamic	75
Movable control structure	84, 91
N	
Nappe	86 – 89
Nappe deflector	90
Nappe separation	85 – 87
Nappe, aerated	86, 88
Nappe, attaching	87
Nappe, detaching	87
Nappe, free	87, 88
Negative surge	80
Negative surge height	80
Negative surge wave	80
Normal discharge	72, 73, 93
O	
Ogee-crested weir	85, 86, 87
Oscillating jump	79
Overfall condition	84, 86
Overfall type	86
Overfall, free	84, 86, 88, 95
Overfall, hydrodynamic	86, 87
Overfall, sharp-crested	86, 88, 95
Overfall, stepped	82
Overfall, submerged	84, 86, 88, 95
P	
Parshall flume	94
Partially filled culvert	92
Pier	93, 98
Pile	96
Plate weir	88, 95
Poleni equation	86, 88, 95
Positive and negative surges	80
Positive surge	80
Positive surge height	80
Positive surge wave	80
Pressure force, static	75
Pressure head	72 – 74, 94
Propagation velocity	77, 98
R	
Radial gate	91
Radial weir	91
Ramp	89
Rectangular channel	72, 74, 78, 93
Rectangular weir	95
Reduction of cross-section	93
Rehbock	95
Ripple formation	97
Roughness characteristic	71, 72, 73, 74, 97
S	
Scour	83, 92
Scour formation	83, 97
Sediment transport	97
Sequent depth	75, 76, 83
Shallow water	98
Shape of cross-section	72
Sharp-crested overfall	86, 88, 95
Sharp-crested weir	85, 88, 95
Sill	78, 83, 85, 89, 93
Siltation	97
Siphon weir	90
Ski-jump overfall	82
Slope of water surface profile	72
Sluice gate	91
Smooth wave	98
Specific energy	72 – 77, 93
Specific energy diagram	74 – 78
Specific force	75, 76, 78
Specific force diagram	75, 76
Spillway	86, 90
Static pressure force	75
Steady jump	79
Stilling basin	82, 83, 85, 97
Strong jump	79
Subcritical discharge	70
Submerged culvert inlet	92
Supercritical discharge	70
Surface wave	77, 98
Suspended load transport	97
T	
Thomson	95
Top water level	85, 89, 90
Trapezoidal flume	94
Trapezoidal weir	95
Type of flow	74, 78
U	
Undulating jump	79
Uniform discharge	70, 72, 89
V	
Velocity head	72, 73, 74
Vena contracta	91
Venturi flume	94
Vibrations, flow-induced	96
Vibrations, vortex-induced	96
V-notch weir	95
Vortex shedding	96
Vortex shedding frequency	96
Vortex-induced vibrations	96
W	
Wave crest	98
Wave formation	98
Wave period	98
Wave trough	98
Wave velocity	98
Wave, smooth	98
Wave, wind-induced	98
Wavelength	98
Weak jump	79
Weir body	82, 85, 89, 90
Weir crest	84 – 90
Weir geometry	85f, 95
Weir head	82, 84 – 86, 88, 89, 95
Weir, broad-crested	78, 85, 89
Weir, ogee-crested	85, 86, 87
Weir, radial	91
Weir, sharp-crested	85, 88, 95
Weir, siphon	90
WES profile	85, 87
Wetted perimeter	71
Wind-induced wave	98

INDEX

KEYWORD	CODE (PAGE)
A	
Accumulated water	170f
Angle of incidence	HM 150.20 (48)
Antidune	HM 140 (164)
B	
Beach simulation	HM 160.42 (142) HM 16x.80 (142)
Bed form	(156)
Bed structure	HM 140 (164) HM 145 (184) HM 162.71 (132, 143) HM 162.72 (132, 143) HM 166 (162) HM 168 (166)
Bed-load transport	HM 162.71 (132, 143) HM 162.72 (132, 143) HM 140 (164) HM 145 (184) HM 166 (162) HM 168 (166)
Bed-load transport formula	HM 140 (164) HM 166 (162) HM 168 (166) (152)
Bernoulli's equation	HM 150.07 (22) HM 150.11 (38) (73)
Bottom layer	(170 – 173)
Bottom layer, saturated	(170)
Bottom layer, unsaturated	(170)
Bottom shear stress	(153, 159)
Bottom slope	HM 160 (114) HM 161 (128) HM 162 (118)
Boundary layer	(153, 156 – 157)
Broad-crested weir	HM 150.21 (26) HM 16x.31 (135, 138) HM 164 (40)
Bulkhead	HM 169 (182)
C	
Capillarity	HM 115 (10)
Centre of buoyancy	HM 150.06 (12) HM 150.39 (14)
Centrifugal pump	HM 150.04 (50) HM 150.16 (52)
Characteristic filtration value	CE 116 (188)
Chute block	HM 16x.35 (136)
Clear-water scour	(158)
Closed circular pipeline	HM 111 (42)
Continuity equation	HM 150.07 (22) HM 150.11 (38) (17, 73)
Control structure	(84 – 91)
Coupled vibration	HM 16x.61 (141)
Course of a river	HM 168 (166)
Crump weir	HM 16x.33 (135, 141)
Culvert	HM 164 (40) HM 16x.45 (137, 140)
Current ripple	HM 168 (166) (156)
D	
Dam	HM 143 (62)
Deflector	HM 150.08 (24)
Dentated sill	HM 16x.35 (136)
Dewatering well	HM 145 (184) HM 165 (178) HM 167 (180)
Discharge coefficient	HM 150.09 (30) HM 150.12 (32)
Discharge measurement	HM 16x.30 (134, 138) HM 16x.51 (139) HM 16x.55 (139) HM 16x.63 (139)
Ditch for excavation	HM 167 (180)
Drag body	HM 150.10 (28) HM 150.21 (26) HM 152 (176)
Drag force	(154)
Drainage	HM 141 (186) HM 145 (184) HM 165 (178) HM 167 (180) HM 169 (182)
Drainage processes	HM 140 (164) HM 143 (62)
Dune	HM 162.71 (132, 143) HM 162.72 (132, 143) HM 166 (162)
Dune formation	HM 140 (164) HM 162.71 (132, 143) HM 162.72 (132, 143) HM 166 (162)
E	
Earth dam	HM 169 (182)
Einstein	HM 140 (164) HM 166 (162) HM 168 (166) (152)
Energy consideration	HM 150.07 (22) (73)
Energy dissipation	HM 16x.32 (136) HM 16x.35 (136) (82)
F	
Filter cake	CE 116 (188)
Filter medium layer	CE 116 (188)
Filtrate quantity	CE 116 (188)
Floating body	HM 150.06 (12) HM 150.39 (14)
Flow coefficient	HM 150.07 (22)
Flow field	HM 152 (176)
Flow force	(153, 154)
Flow from tanks	HM 150.09 (30) HM 150.12 (32)
Flow net	HM 169 (182) (173)
Flow rate measurement	HM 150.07 (22) HM 150.11 (38)
Flow separation	HM 152 (176)
Flow through changes in cross-section	HM 150.10 (28) HM 152 (176)
Flow, horizontal	HM 150.09 (30)
Flow, laminar	HM 150.01 (36) HM 150.18 (20)
Flow, turbulent	HM 150.01 (36) HM 150.18 (20)
Flow, vertical	HM 150.12 (32)
Flow-induced vibrations	HM 16x.61 (141)
Flow-measuring flume	HM 16x.51 (139) HM 16x.55 (139) HM 16x.63 (139)
Flownet	(173)
Flume, Parshall	HM 16x.55 (139)
Flume, trapezoidal	HM 16x.55 (139)
Flume, Venturi	HM 16x.55 (139)
Fluvial obstacle mark	HM 140 (164) HM 145 (184) HM 166 (162) HM 168 (166)
Francis turbine	HM 150.20 (48)
Free jet turbine	HM 150.19 (46)
Friction factor	HM 150.01 (36)
G	
Gate	HM 16x.29 (134) HM 16x.40 (134) HM 164 (40)
Groundwater	HM 141 (186) HM 145 (184) HM 165 (178) HM 167 (180) HM 169 (182)
Groundwater flow	HM 145 (184) HM 165 (178) HM 167 (180) HM 169 (182)
Groundwater level	HM 141 (186) HM 145 (184) HM 165 (178) HM 167 (180)
Groundwater level over time	HM 145 (184) HM 165 (178) HM 167 (180)
Guide vane	HM 150.10 (28) HM 150.20 (48) HM 150.21 (26) HM 152 (176)
H	
Hard chine	HM 150.06 (12) HM 150.39 (14)
Heel	HM 150.06 (12) HM 150.39 (14)
Horizontal flow	HM 150.09 (30)
Horseshoe vortex	(158)
Hydraulic power	HM 150.04 (50) HM 150.16 (52)
Hydrograph	HM 141 (186)
I	
Impermeable soil layer	HM 165 (178) (170)
Impulse turbine	HM 150.19 (46)
Incident flow	HM 150.21 (26)
Island	HM 165 (178) HM 168 (166)
J	
Jet deflection	HM 150.08 (24) HM 150.12 (32)
Jet force	HM 150.08 (24)
K	
Karman vortex street	HM 16x.61 (141)
L	
Laminar flow	HM 150.01 (36) HM 150.18 (20)
Laser Doppler Anemometry	(109)
LDA	(109)
Lift force	HM 115 (10) (154)
Lowering of groundwater	HM 167 (180)
M	
Measuring nozzle	HM 150.11 (38)
Measuring weir	HM 16x.30 (134, 138)
Metacentre	HM 150.06 (12) HM 150.39 (14)
Meyer-Peter and Mueller	HM 140 (164) HM 166 (162) HM 168 (166) (152)
Momentum equation	HM 150.08 (24) (75 – 76)
N	
Narrow-crested weir	HM 164 (40)
Natural frequency	HM 143 (62) HM 156 (60)
O	
Ogee-crested weir	HM 16x.32 (136) HM 16x.34 (137) HM 164 (40)
Open-channel flow	HM 140 (164) HM 150.21 (26) HM 160 (114) HM 161 (128) HM 162 (118) HM 164 (40)
Opening characteristic	HM 150.11 (38)
Orifice plate flow meter	HM 150.11 (38)
Outlet contour	HM 150.09 (30) HM 150.12 (32)
Outlet jet	HM 150.12 (32)
Outlet opening	HM 150.12 (32)
Outlet velocity	HM 150.09 (30)
P	
Parallel connection of pipe sections	HM 111 (42)
Parallel connection of pumps	HM 150.16 (52)
Parshall flume	HM 16x.55 (139)
Particle image velocimetry	(109)
Pelton turbine	HM 150.19 (46)
Permeability coefficient	(170)
Permeable soil layer	(170)
Pier	HM 140 (164) HM 145 (184) HM 16x.46 (141) HM 166 (162) HM 168 (166)
Pile	HM 16x.61 (141)
Pipe flow	HM 111 (42) HM 150.01 (36) HM 150.11 (38) HM 164 (40)
Pipe friction loss	HM 111 (42) HM 150.01 (36)
Pipe networks	HM 111 (42)
Pipe sections, connected in parallel	HM 111 (42)
Pipe sections, connected in series	HM 111 (42)
Piping elements	HM 111 (42)
Pitotstatic tube	HM 16x.50 (108, 144)
PIV	(109)
Plate weir	HM 150.21 (26) HM 16x.30 (134, 138) HM 164 (40)
Positive and negative surges	(80)
Potential equilibrium	(172)
Potential flow	HM 150.10 (28) HM 152 (176)
Potential line	(173)
Power, hydraulic	HM 150.04 (50) HM 150.16 (52)
Precipitation	HM 141 (186) HM 145 (184) HM 165 (178)
Precipitation area	HM 141 (186) HM 145 (184) HM 165 (178)
Precipitation density	HM 145 (184) HM 165 (178)
Precipitation time	HM 141 (186) HM 145 (184)
Pressure loss	CE 116 (188) HM 111 (42) HM 150.01 (36) HM 150.11 (38)
Pressure on the bottom	HM 115 (10)
Pump characteristic	HM 150.04 (50) HM 150.16 (52)
Pumps, connected in parallel	HM 150.16 (52)
Pumps, connected in series	HM 150.16 (52)
R	
Radial gate	HM 16x.40 (134)
Rainwater retention basin	HM 141 (186) HM 143 (62)
Rake	HM 16x.38 (138)
Reaction turbine	HM 150.20 (48)
Rectangular channel	HM 160 (114) HM 161 (128) HM 162 (118)
Resistance coefficient	HM 150.11 (38)
Reynolds number	HM 150.01 (36) HM 150.18 (20)
Ripple	HM 140 (164) HM 162.71 (132, 143) HM 162.72 (132, 143) HM 166 (162) HM 168 (166)
Ripple formation	HM 140 (164) HM 162.71 (132, 143) HM 162.72 (132, 143) HM 166 (162) HM 168 (166)
River channel	HM 145 (184) HM 166 (162) HM 168 (166)
Rolling	(155)
Round bilge	HM 150.39 (14)
S	
Saltation	(155)
Saturated bottom layer	(170)
Scour	HM 140 (164) HM 145 (184) HM 166 (162) HM 168 (166)
Sediment transport	HM 140 (164) HM 145 (184) HM 162.71 (132, 143) HM 162.72 (132, 143) HM 166 (162) HM 168 (166)
Sediment transport capacity	(152, 158)
Sedimentation process	HM 140 (164) HM 142 (168) HM 145 (184) HM 166 (162) HM 168 (166)
Sedimentation tank	HM 142 (168)
Seepage	(170ff)
Seepage flow	CE 116 (188) HM 145 (184) HM 165 (178) HM 167 (180) HM 169 (182)
Seepage line	(171)
Seepage through dams	HM 169 (182)

INDEX

KEYWORD	CODE (PAGE)
Seepage velocity	(172)
Separation eddy	(157)
Separation zone	(157)
Series connection of pipe sections	HM 111 (42)
Series connection of pumps	HM 150.16 (52)
Shape of frame	HM 150.06 (12)
	HM 150.39 (14)
Shaping of the river bed	HM 145 (184) HM 166 (162)
	HM 168 (166)
Sharp-crested weir	HM 150.21 (26)
	HM 16x.30 (134, 138)
Sheet pile	HM 169 (182)
	(173)
Sill	HM 16x.44 (135, 140)
	HM 164 (40)
Siltation	HM 140 (164) HM 145 (184)
	HM 162.71 (132, 143)
	HM 162.72 (132, 143)
	HM 166 (162) HM 168 (166)
Sink	HM 150.10 (28)
	HM 152 (176)
Siphon weir	HM 16x.36 (137)
Sluice gate	HM 16x.29 (134)
	HM 164 (40)
Soil layer, impermeable	HM 165 (178)
	(170)
Soil layer, permeable	(170)
Soil water	(170)
Source	HM 150.10 (28)
	HM 152 (176)
Storage capacity	HM 141 (186) HM 145 (184)
	HM 165 (178)
Storage reservoir	HM 143 (62)
Streamlines	HM 150.10 (28)
	HM 150.21 (26)
	HM 152 (176) HM 169 (182)
Surface tension	HM 115 (10)
Surge chamber	HM 143 (62) HM 156 (60)
Suspended load transport	HM 142 (168)

T

KEYWORD	CODE (PAGE)
Trajectory	HM 150.09 (30)
Transmission of vibrations	HM 16x.61 (141)
Transport balance	(152)
Transport formula	HM 140 (164) HM 166 (162)
	HM 168 (166)
	(152)
Transport rate	HM 140 (164) HM 166 (162)
	HM 168 (166)
Trapezoidal flume	HM 16x.63 (139)
Trough	(157)
Turbine	HM 150.19 (46)
	HM 150.20 (48)
Turbine characteristic curve	HM 150.19 (46)
	HM 150.20 (48)
Turbomachine	HM 150.04 (50)
	HM 150.16 (52)
	HM 150.19 (46)
	HM 150.20 (48)
Turbulent flow	HM 150.01 (36)
	HM 150.18 (20)

U

KEYWORD	CODE (PAGE)
Unsaturated bottom layer	170

V

KEYWORD	CODE (PAGE)
Velocity of sound	HM 156 (60)
Venturi flume	HM 16x.51 (139)
Venturi nozzle	HM 150.07 (22)
	HM 150.11 (38)
	(17)
Vertical flow	HM 150.12 (32)
Vibrations, flow-induced	HM 16x.61 (141)
Vibrations, vortex-induced	HM 16x.61 (141)
Vortex formation	(17, 55)
Vortex system	(158)
Vortex-induced vibrations	HM 16x.61 (141)

W

KEYWORD	CODE (PAGE)
Wake vortex	(158)
Water hammer	HM 156 (60)
Water inrush	HM 167 (180)
Wave formation	HM 16x.41 (131, 142)
Weir, broad-crested	HM 150.21 (26)
	HM 16x.31 (135, 138)
	HM 164 (40)
Weir, ogee-crested	HM 16x.32 (136)
	HM 16x.34 (137)
	HM 164 (40)
Weir, plate	HM 150.21 (26)
	HM 16x.30 (134, 138)
	HM 164 (40)
Weir, sharp-crested	HM 150.21 (26)
	HM 16x.30 (134, 138)
	HM 164 (40)
Weir, siphon	HM 16x.36 (137)
Well	HM 145 (184) HM 165 (178)
	HM 167 (180)

PRODUCT OVERVIEW

CODE	PRODUCT	PAGE
CE 116	Cake and Depth Filtration	188
HM 111	Pipe Networks	42
HM 115	Hydrostatics Trainer	10
HM 140	Open-Channel Sediment Transport	164
HM 141	Hydrographs after Precipitation	186
HM 142	Separation in Sedimentation Tanks	168
HM 143	Transient Drainage Processes in Storage Reservoirs	62
HM 145	Advanced Hydrological Investigations	184
HM 150	Base Module for Experiments in Fluid Mechanics	56
HM 150.01	Pipe Friction for Laminar / Turbulent Flow	36
HM 150.04	Centrifugal Pump	50
HM 150.06	Stability of Floating Bodies	12
HM 150.07	Bernoulli's Principle	22
HM 150.08	Measurement of Jet Forces	24
HM 150.09	Horizontal Flow from a Tank	30
HM 150.10	Visualisation of Streamlines	28
HM 150.11	Losses in a Pipe System	38
HM 150.12	Vertical Flow from a Tank	32
HM 150.16	Series and Parallel Configuration of Pumps	52
HM 150.18	Osborne Reynolds Experiment	20
HM 150.19	Operating Principle of a Pelton Turbine	46
HM 150.20	Operating Principle of a Francis Turbine	48
HM 150.21	Visualisation of Streamlines in an Open Channel	26
HM 150.39	Floating Bodies for HM 150.06	14
HM 152	Potential Flow	176
HM 156	Water Hammer and Surge Chamber	60
HM 160	Experimental Flume 86x300mm	114
HM 161	Experimental Flume 600x800mm	128
HM 162	Experimental Flume 309x450mm	118
HM 162.12	System for Data Acquisition and Automation	146
HM 162.13	Electronic Pressure Measurement, 10x0...50 mbar	147
HM 16x.10	Extension Element of the Experimental Flume	146
HM 16x.20	Water Tank	147
HM 16x.29	Sluice Gate	134
HM 16x.30	Set of Plate Weirs, 4 Types	134/138
HM 16x.31	Broad-Crested Weir	135/138
HM 16x.32	Ogee-Crested Weir with 2 Weir Outlets	136
HM 16x.33	Crump Weir	135/141
HM 16x.34	Ogee-Crested Weir with Pressure Measurement	137
HM 16x.35	Elements for Energy Dissipation	136
HM 16x.36	Siphon Weir	137
HM 16x.38	Rake	138
HM 16x.40	Radial Gate	134
HM 16x.41	Wave Generator	131/142
HM 160.42	Plain Beach	142
HM 16x.44	Sill	135/140
HM 16x.45	Culvert	137/140
HM 16x.46	Set of Piers, 7 Profiles	141
HM 16x.50	Pitotstatic Tube	108/144
HM 16x.51	Venturi Flume	139
HM 16x.52	Level Gauge	108/144
HM 16x.53	Tube Manometers	108/145
HM 16x.55	Parshall Flume	139
HM 162.57	Electrical Inclination Adjustment	107/147
HM 16x.59	Instrument Carrier	108/145
HM 16x.61	Vibrating Piles	141
HM 16x.63	Trapezoidal Flume	139
HM 16x.64	Velocity Meter	108/145
HM 162.71	Closed Sediment Circuit	132/143
HM 16x.72	Sediment Trap	132/143
HM 16x.73	Sediment Feeder	132/143
HM 16x.77	Flume Bottom with Pebble Stones	140
HM 16x.80	Set of Beaches	142
HM 16x.91	Digital Level Gauge	108/144
HM 164	Open Channel and Closed Channel Flow	40
HM 165	Studies in Hydrology	178
HM 166	Fundamentals of Sediment Transport	162
HM 167	Ground Water Flow	180
HM 168	Sediment Transport in River Courses	166
HM 169	Visualisation of Seepage Flows	182

CONTACT

G.U.N.T.
Gerätebau GmbH

Hanskampring 15 - 17
D-22885 Barsbüttel
GERMANY

phone: +49 40 67 08 54 - 0
Fax: +49 40 67 08 54 - 42

web: www.gunt.de
e-mail: sales@gunt.de

YOUR LOCAL SERVICE

Visit our website
www.gunt.de