gunt HAMBURG

Equipment for Engineering Education

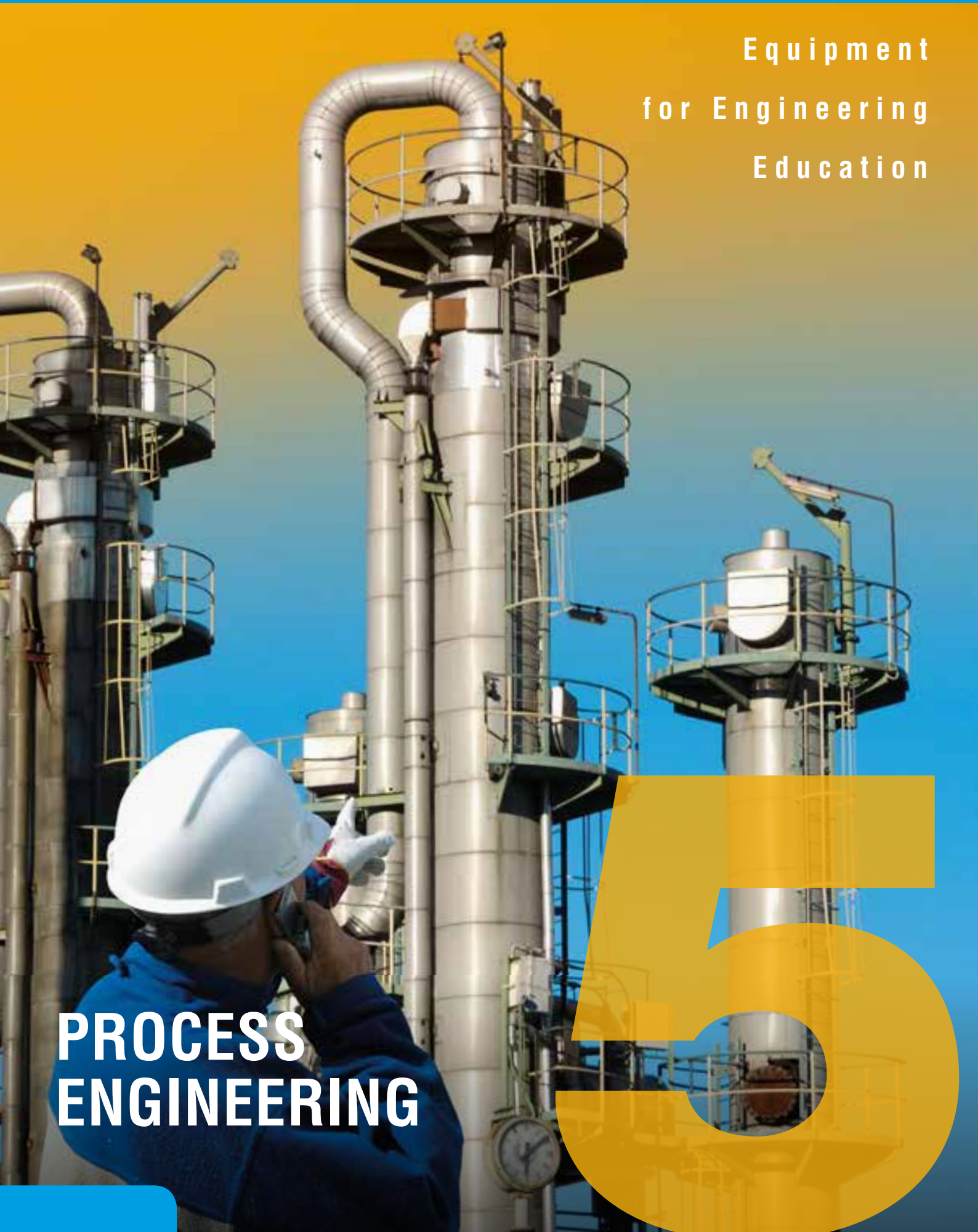

PROCESS ENGINEERING

5

WELCOME TO GUNT

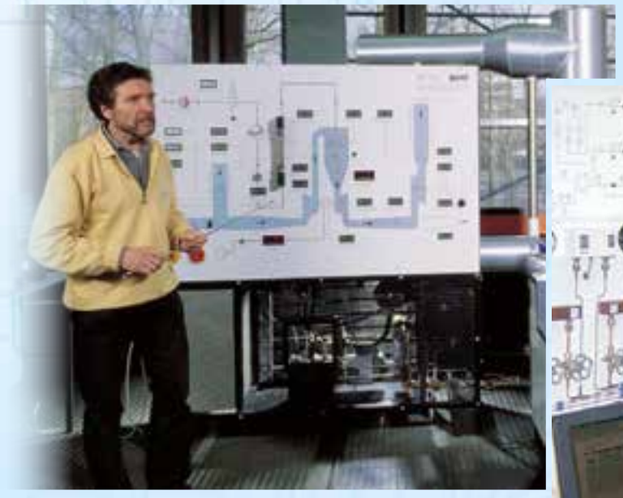

Your reliable and experienced partner for

- teaching and training systems for innovative technical training
- experimentation and research equipment

GUNT demonstration and experimentation equipment for

- training in technical professions
- training of technical staff in trades and industry
- studies in engineering disciplines

CONTENTS

PROCESS ENGINEERING

CHAPTER	TITLE	PAGE
1	Theoretical Fundamentals	8
2	Practical Fundamentals	110
3	Mechanical Process Engineering	224
4	Thermal Process Engineering	286
5	Chemical Process Engineering	326
6	Biological Process Engineering	352
7	Water Treatment	376
	Index	452
	Product Overview	457

IMPRINT

© 2015 by GUNT Gerätebau GmbH. Reproduction – in whole or in part – permitted only with written consent.
GUNT is a registered trademark. This means GUNT products are protected, and subject to copyright.
No liability can be accepted for any misprints. Subject to change without notice.

Technical revision: Dr. Philip Rubini, CEng, FIChemE, MInstP, MIET, University of Hull, UK

Layout, typesetting and litho: Profi-Satz, Hamburg
Printed on non-chlorinated, environmentally friendly paper.

THE COMPLETE GUNT PROGRAMME – EQUIPMENT FOR ENGINEERING EDUCATION

ENGINEERING MECHANICS & MACHINE ELEMENTS

- Statics
- Strength of Materials
- Dynamics
- Fundamentals of Engineering Design
- Machinery Diagnosis
- Properties of Materials

FLUID MECHANICS

- Fundamentals of Fluid Mechanics
- Steady Flow
- Steady Flow of Compressible Fluids
- Flow around Bodies
- Examples of Transient Flow
- Hydraulic Fluid Energy Machines
- Components in Piping Systems and Plant Design
- Fluidic Experimental Plants
- Hydraulic Engineering

MECHATRONICS

- Engineering Drawing
- Cutaway Models
- Dimensional Metrology
- Fasteners and Machine Parts
- Manufacturing Engineering
- Assembly Projects
- Maintenance
- Machinery Diagnosis
- Automation

PROCESS ENGINEERING

- Process Control Engineering
  - Fundamentals of Control Engineering
  - Components and Calibration
  - Simple and Complex Control Systems
- Theoretical Fundamentals
- Practical Fundamentals
- Mechanical Process Engineering
- Thermal Process Engineering
- Chemical Process Engineering
- Biological Process Engineering
- Water Treatment

THERMAL ENGINEERING AND HVAC

- Fundamentals of Thermodynamics
- Applied Thermodynamics
- Renewable Energies
- Power Engines and Machines
- Internal Combustion Engines
- Refrigeration and Air Conditioning Technology
- Heating and Ventilation in Buildings
- Sanitary Systems

ENERGY & ENVIRONMENT

ENERGY

- Solar Energy
- Hydropower and Ocean Energy
- Wind Power
- Biomass
- Geothermal Energy
- Energy Systems
- Energy Efficiency in Building Services Engineering

ENVIRONMENT

- Water
- Air
- Soil
- Waste

PLANNING & CONSULTING · TECHNICAL SERVICE COMMISSIONING & TRAINING

TEACHING AND LEARNING SYSTEMS FOR PROCESS ENGINEERING

From the abstract molecular world to the process engineering system: **We accompany you**

Systematic training is essential in order to understand the complex technological relationships. This is the reason why the adjacent learning structure for process engineering (technology) has developed and established itself over time. This catalogue is based on this structure.

THE THEORETICAL FUNDAMENTALS

Without knowledge of the basic laws of phase transformation or molecular heat and mass transport, it is not possible to understand the basic processes of process engineering. Process engineering is an interdisciplinary science and partially uses the knowledge of other engineering disciplines such as, e.g. thermodynamics and fluid mechanics. In addition, basic knowledge of measuring methods and control engineering is essential for the safe and efficient execution of the complex processes.

THE PRACTICAL FUNDAMENTALS

The implementation of the theoretically calculated processes takes place in real systems comprising components such as pipelines, tanks and pumps. The characteristics of pumps, the properties of connecting elements and the adjustment characteristic of control valves are just a few of the important basics for developing, designing and operating process engineering systems. The operating mode of the individual components is of particular importance to mechanics and skilled workers who maintain and service process engineering systems.

PROCESS CONTROL ENGINEERING

The automated operation and monitoring of process engineering systems require extensive knowledge of process control engineering, which can only be imparted to a limited extent in the scope of a process engineering training course. For training specialists in this area, GUNT has compiled a separate range of devices.

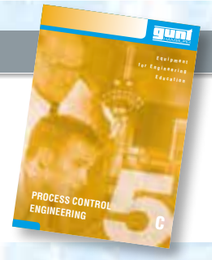

THE UNIT OPERATIONS

The unit operations of process engineering are divided into four different core areas according to the treatment method. A basic process is the smallest theoretically defined unit of an overall process. The restriction to these small units makes sense from a research perspective and also a didactic perspective as complex, multiple problems already have to be solved at the unit operations level due to the several phases (solid, liquid, gaseous) and substances involved.

THE APPLICATION AREAS

The application areas of process engineering are manifold. The basic processes are modified and combined depending on the objective. Due to the relevance to society as a whole, the energy and environmental engineering sectors have come about in the recent past. From the environmental engineering sector, you will find the complete water treatment product range in the last chapter of this catalogue. You will also find many other application areas of process engineering in our Energy & Environment product sector.

FUNDAMENTALS OF PROCESS ENGINEERING

Chapter 1 | THEORY	Chapter 2 | PRACTISE
Thermodynamics	Tanks and Materials
Heat and Mass Transfer	Pumps and Compressors
Fluid Mechanics	Piping Elements and Fittings
Fundamentals of Control Engineering	Heat Exchangers and Steam Generators
Measuring Methods	Applications of Control Engineering

UNIT OPRERATIONS OF PROCESS ENGINEERING

Chapter 3	Chapter 4	Chapter 5	Chapter 6
Mechanical Process Engineering	Thermal Process Engineering	Chemical Process Engineering	Biological Process Engineering

APPLICATIONS FROM ENERGY AND ENVIRONMENTAL ENGINEERING

2E

- Biomass
- Water
- Air
- Soil
- Waste

Chapter 7 | WATER TREATMENT

1 THEORETICAL FUNDAMENTALS

INTRODUCTION

Overview	Theoretical Fundamentals of Process Engineering	10

THERMODYNAMICS

WL 204	Vapour Pressure of Water – Marcet Boiler	12
WL 102	Change of State of Gases	14
WL 210	Evaporation Process	16
WL 220	Boiling Process	18
WL 230	Condensation Process	20
ET 805.50	Determination of the Vapour Content	22
ET 850	Steam Generator	24
ET 350	Changes of State in the Refrigeration Circuit	26

HEAT AND MASS TRANSFER

CE 110	Diffusion in Liquids and Gases	28
WL 352	Heat Transfer by Convection	30
WL 372	Heat Transfer by Conduction	32
WL 373	Heat Conduction in Gases and Liquids	34
WL 377	Convection and Radiation	36
Overview	WL 110 Series: Modular Heat Exchanger Training Equipment	38
WL 110	Heat Exchanger Supply Unit	40
WL 110.01	Tubular Heat Exchanger	42
WL 110.02	Plate Heat Exchanger	44
WL 110.03	Shell & Tube Heat Exchanger	46
WL 110.04	Jacketed Vessel with Stirrer & Coil	48
WL 110.20	Water Chiller for WL 110	50
WL 225	Heat Transfer in the Fluidised Bed	52
Overview	WL 320: Wet Cooling Tower	54
WL 320	Wet Cooling Tower	56

FLUID MECHANICS

Overview	HM 150 Series: A Simple Introduction into the Fundamentals of Fluid Mechanics	58
HM 150.18	Osborne Reynolds Experiment	60
HM 150.07	Bernoulli's Principle	62
HM 150.01	Pipe Friction for Laminar / Turbulent Flow	64
HM 150.12	Vertical Flow from a Tank	66
HM 150.11	Losses in a Pipe System	68
HM 150	Base Module for Experiments in Fluid Mechanics	70
HM 115	Hydrostatics Trainer	72
HM 135	Determination of the Settling Velocity	74
HM 155	Water Hammer in Pipes	76
HM 136	Flow through Packed Columns	78

FUNDAMENTALS OF CONTROL ENGINEERING

Overview	RT 010 – RT 060: Fundamentals of Process Control Engineering	80
RT 010	Training System: Level Control, HSI	82
RT 020	Training System: Flow Control, HSI	84
RT 030	Training System: Pressure Control, HSI	86
RT 040	Training System: Temperature Control, HSI	88
RT 050	Training System: Speed Control, HSI	90
RT 060	Training System: Position Control, HSI	92
RT 800	PLC Application: Mixing Process	94
IA 130	PLC Module	96

MEASURING METHODS

IA 110	Calibrating a Pressure Sensor	98
WL 201	Fundamentals of Humidity Measurement	100
WL 202	Fundamentals of Temperature Measurement	102
WL 203	Fundamentals of Pressure Measurement	104
Overview	HM 500: Methods of Flow Rate Measurement	106
HM 500.01	Rotameter	106
HM 500.06	Venturi Nozzle	106
HM 500.03	Rotameter with Transducer	107
HM 500.04	Electromagnetic Flow Meter	107
HM 500.05	Ultrasonic Flow Meter	107
HM 500.07	Pitot Tube	107
HM 500.08	Orifice Plate Flow Meter	107
HM 500.09	Measuring Nozzle	107
HM 500.10	Paddle Wheel Flow Meter	107
HM 500.11	Vortex Flow Meter	107
HM 500.13	Orifice Plate Flow Meter with Transducer	107
HM 500.14	Turbine Wheel Flow Meter	107
HM 500.15	Bypass Flow Meter	107
HM 500.16	Baffle Plate Flow Meter	107
HM 500	Flow Meter Trainer	108

Visit our website www.gunt.de

THEORETICAL FUNDAMENTALS OF PROCESS ENGI NEERING

WL 377 Convection and Radiation

The theoretical fundamentals and laws for understanding process engineering are extremely manifold. Process engineering is an interdisciplinary science and also uses the knowledge of other engineering disciplines. In this chapter, we are presenting a device range with which you can impart the typical basic theoretical learning contents of a process engineering curriculum.

THERMODYNAMICS

For many processes, e.g. thermal process engineering, knowledge of thermodynamics is essential. Understanding a complex process such as, for example, rectification, initially requires the thermodynamic basics of evaporation and condensation. With the help of the laws of thermodynamics the dependencies of the variables temperature, pressure, density and concentration in the system of steam and liquid can be described. Only with this knowledge is it possible to design and construct process engineering apparatus and systems.

WL 230 Condensation Process

HEAT AND MASS TRANSFER

The speed of production processes is often determined by heat and mass transfer processes. For example, in many chemical and biological mass transformations, it is not the reaction rates that limit the conversion, but the mass transportation processes, which bring about the contact between the reacting agents and the removal of the reaction products. These processes are closely linked with the mass flows, i.e. the actual output of a process. Knowledge of the laws of heat and mass transfer is thus another important basis for designing process engineering systems.

Heat transfer processes are fundamental for the calorific design of process engineering systems. Knowledge of the laws of heat transfer are essential for designing heat transfer surfaces and facilities for heating and cooling. The selection, optimisation and designing of heat exchangers are typical tasks of experts in the process engineering sector.

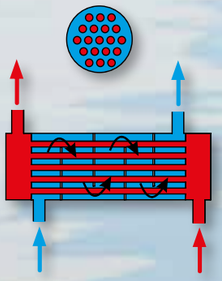

Heat transfer in shell & tube heat exchangers

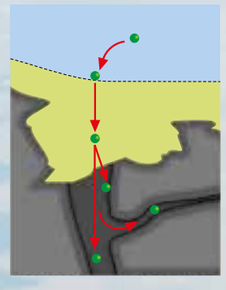

Mass transfer during adsorption

FLUID MECHANICS

The transportation of substances involved in process engineering often takes place through pipelines. This leads to different flow profiles in conjunction with varying pressure losses, depending on the diameter of the pipelines, flow velocity, substance properties and other influencing factors. The pressure losses in turn influence the necessary output of pumps and compressors. The flow profiles also influence the heat and mass transfer processes.

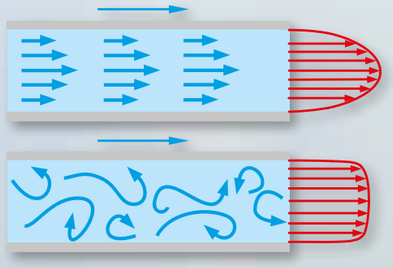

Laminar and turbulent flow profile in pipelines

MEASURING METHODS

To control processes, first of all it is necessary to record the process variables. The different properties of the process variables, but also of the substances used and the respective aggregate states, make different measuring methods necessary. The different measuring methods can be illustrated in a simple way using the instructional units selected here.

WL 202 Fundamentals of Temperature Measurement

FUNDAMENTALS OF CONTROL ENGINEERING

Mastering industrial-scale process engineering systems without process control engineering is unimaginable. Process variables such as pressure, flow rate or temperature have different properties with regard to their control response. The control response can be approximated and specified with the help of theoretical functions. We have compiled a selection of simple instructional units with which it is easy to impart these theoretical fundamentals of control engineering.

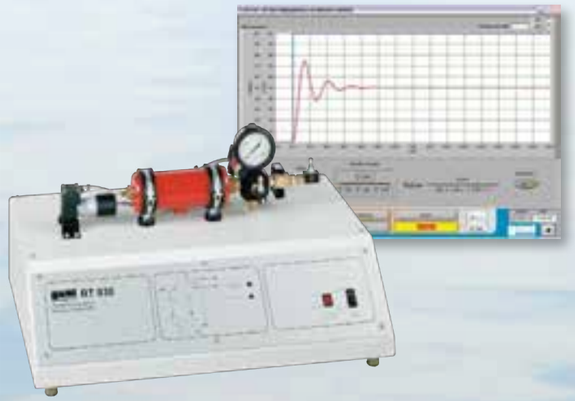

RT 030 Training System: Pressure Control, HSI

WL 204 Vapour Pressure of Water - Marcet Boiler

Technical Description

In a closed system filled with fluid, a thermodynamic equilibrium sets in between the fluid and its vaporised phase. The prevailing pressure is called vapour pressure. It is substance-specific and temperature-dependent.

When a fluid is heated in a closed tank, the pressure increases as the temperature rises. Theoretically, the pressure increase is possible up to the critical point at which the densities of the fluid and gaseous phases are equal. Fluid and vapour are then no longer distinguishable from each other. This knowledge is applied in practice in process technology for freeze drying or pressure cooking.

The WL 204 experimental unit can be used to demonstrate the relationship between the pressure and temperature of water in a straightforward manner. Temperatures of up to 200°C are possible for recording the vapour pressure curve. The temperature and pressure can be continuously monitored via a digital temperature display and a Bourdon tube pressure gauge.

A temperature limiter and pressure relief valve are fitted as safety devices and protect the system against overpressure.

The well-structured instructional material sets out the fundamentals and provides a step-by-step guide through the experiments.

Learning Objectives / Experiments

- recording the vapour pressure curve of water
- presentation of the relationship between pressure and temperature in a closed system
- temperature and pressure measurement
- influence of foreign gases (air) on the pressure

*** Recording the vapour pressure curve of water**

*** Saturation pressure of water vapour as a function of the temperature**

WL 204 Vapour Pressure of Water - Marcet Boiler

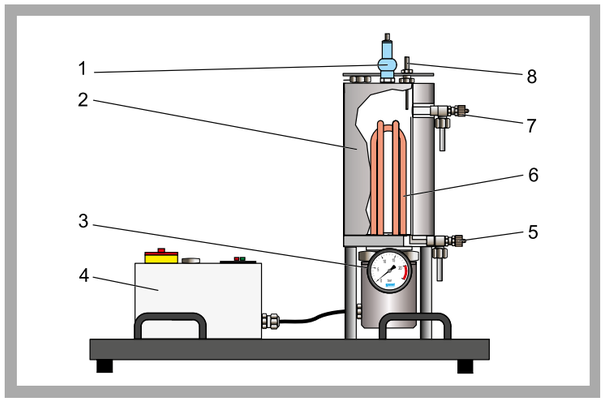

1 safety valve, 2 boiler with insulating jacket, 3 Bourdon tube pressure gauge, 4 switch cabinet with temperature display, 5 drain valve, 6 heater, 7 overflow, 8 temperature sensor

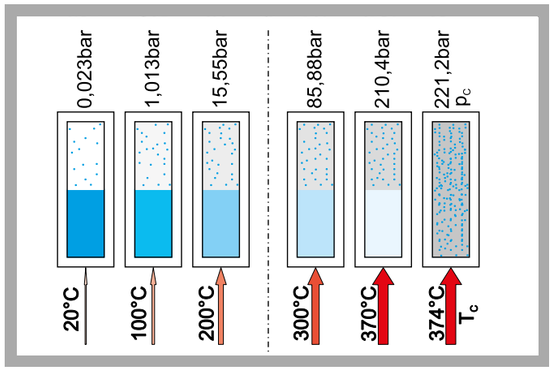

Heating up water in a closed tank: the pressure and temperature increase proportionally up to the critical point, at which fluid and vapour are no longer distinguishable from each other; critical point at T_c= 374°C, p_c= 221bar, dotted line: temperature limit of the experimental unit

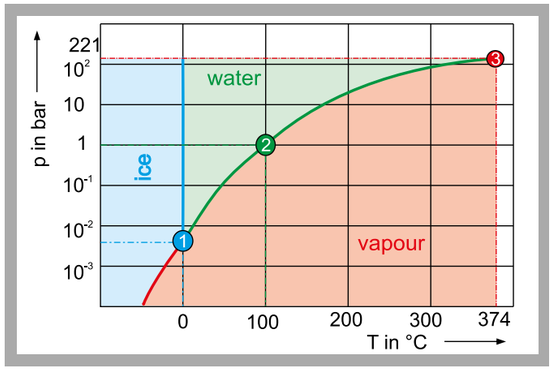

Temperature-pressure diagram of water
red: sublimation curve, green: boiling point curve, blue: melting point curve;
1 triple point, 2 boiling point, 3 critical point

Specification

[1] measuring a vapour pressure curve for saturated vapour
[2] boiler with insulating jacket
[3] temperature limiter and safety valve protect against overpressure in the system
[4] Bourdon tube pressure gauge to indicate pressure
[5] digital temperature display

Technical Data

Bourdon tube pressure gauge: -1...24bar
Temperature limiter: 200°C
Safety valve: 20bar
Heater: 2kW
Boiler, stainless steel: 2L

Measuring ranges
- temperature: 0...250°C
- pressure: 0...20bar

Dimensions and Weight

LxWxH: 600x400x680mm
Weight: approx. 35kg

Required for Operation

230V, 50/60Hz, 1 phase or 120V, 60Hz/CSA, 1 phase

Scope of Delivery

1 experimental unit
1 funnel
1 set of tools
1 set of instructional material

Order Details

060.20400 WL 204 Vapour Pressure of Water - Marcet Boiler

G.U.N.T Gerätebau GmbH, Hanskampring 15-17, D-22885 Barsbüttel, Phone +49 (40) 67 08 54-0, Fax +49 (40) 67 08 54-42, E-mail sales@gunt.de, Web http://www.gunt.de
We reserve the right to modify our products without any notifications.

WL 102 Change of State of Gases

*** Isothermal and isochoric change of state of air**

*** GUNT software for acquisition, processing and display of measured data**

Technical Description

Gas laws belong to the fundamentals of thermodynamics and are dealt with in every training course on thermodynamics.

The WL 102 unit enables two changes of state to be studied experimentally: isothermal change of state, also known as the Boyle-Mariotte law, and isochoric change of state, which occurs at constant volume. Transparent tanks enable the change of state to be observed. Air is used as the test gas.

In the first tank, positioned on the left, the enclosed air volume is reduced or increased using a compressor and hydraulic oil. This results in an isothermal change of state. The compressor can also operate as a vacuum pump. If the changes occur slowly, the change of state takes place at an almost constant temperature.

In the second tank, positioned on the right, the temperature of the test gas is increased by a controlled electric heater and the resulting pressure rise is measured. The volume of the enclosed gas remains constant. Temperatures, pressures and volumes are measured electronically, digitally displayed and transferred to a PC for processing.

The well-structured instructional material sets out the fundamentals and provides a step-by-step guide through the experiments.

Learning Objectives / Experiments

- demonstrating the laws of state changes in gases experimentally
- isothermal change of state, Boyle-Mariotte law
- isochoric change of state, Gay-Lussac's 2nd law

WL 102 Change of State of Gases

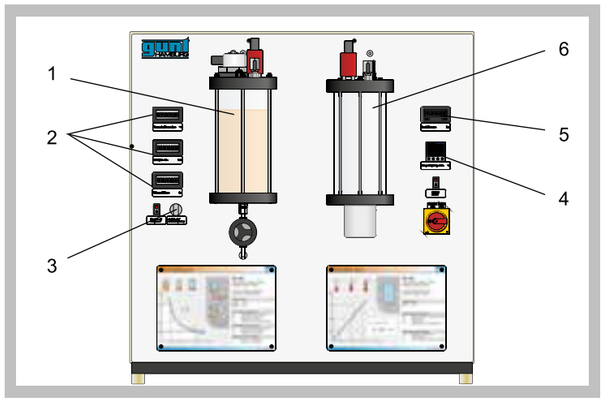

1 tank 1 for isothermic change of state, 2 digital displays, 3 5/2-way valve for switching between compression and expansion, 4 heating controller, 5 digital display, 6 tank 2 for isochoric change of state

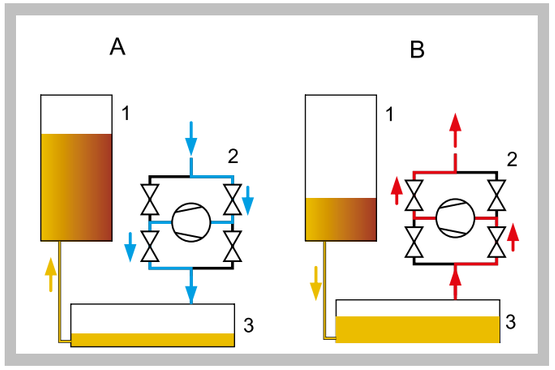

Representation of the change of volume
1 oil-filled tank for isothermic change of state, 2 valve arrangement with compressor, 3 storage tank
A compression (blue), B expansion (red)

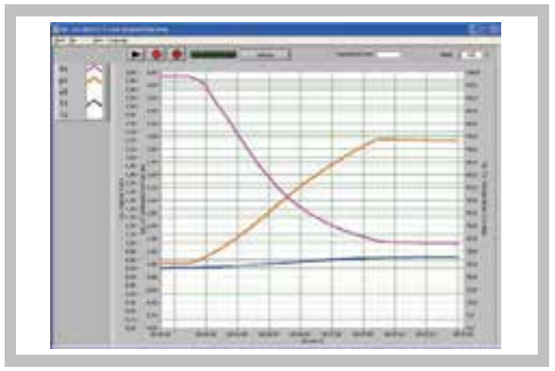

Software screenshot: charts for isothermic compression

Specification

[1] experimental investigation of gas laws
[2] transparent measuring tank 1 for investigation of isothermic change of state
[3] hydraulic oil filling for changing volume of test gas
[4] built-in compressor generates necessary pressure differences to move the oil volume
[5] compressor can also be used as vacuum pump
[6] 5/2-way valve for switching between compression and expansion
[7] transparent measuring tank 2 for investigation of isochoric change of state
[8] electrical heater with temperature control in tank 2
[9] sensors and digital displays for temperatures, pressures and volumes
[10] GUNT software for data acquisition via USB under Windows Vista or Windows 7

Technical Data

Compressor / vacuum pump
- power output: 60W
- delivery side: 2bar
- intake side: 213mbar

Temperature controller: PID, 300W, limited to 80°C

Measuring ranges
Temperature
- tank 1: 0...80°C
- tank 2: 0...80°C

Pressure
- tank 1: 0...4bar absolute
- tank 2: 0...2bar absolute

Volume
- tank 1: 0...3L

Dimensions and Weight

LxWxH: 900x550x900mm
Weight: approx. 50kg

Required for Operation

230V, 50/60Hz, 1 phase or 120V, 60Hz/CSA, 1 phase

Scope of Delivery

1 experimental unit
1 GUNT software CD + USB cable
1L hydraulic oil
1 feed hopper
1 set of instructional material

Order Details

060.10200 WL 102 Change of State of Gases

G.U.N.T Gerätebau GmbH, Hanskampring 15-17, D-22885 Barsbüttel, Phone +49 (40) 67 08 54-0, Fax +49 (40) 67 08 54-42, E-mail sales@gunt.de, Web http://www.gunt.de
We reserve the right to modify our products without any notifications.

WL 210 Evaporation Process

*** Demonstration of evaporation in a double-wall pipe evaporator made of glass**

*** Operation with harmless, special low boiling point liquid**

Technical Description

During the generation of vapour, the medium that is to evaporate runs through different flow forms dependent on the heat transfer area. The medium flows into a tube evaporator as a single-phase fluid and exits the tube evaporator as single-phase superheated vapour. In practice, the water vapour generated in big systems is used e.g. for heating plants or machine drives. To design steam generators, it is important to have knowledge of the evaporation process with the boiling crises in order to ensure reliable operation. Boiling crises are caused by a sudden deterioration of the heat transfer, whereby the high heat flux density leads to a dangerous increase in the wall temperature.

The WL 210 experimental unit can be used to examine and visualise the evaporation process in its various flow forms. This is done by heating evaporating liquid, Solkatherm SES36, in a tube evaporator made of glass. Compared with water, this liquid has the advantage that its boiling point is at 36,7°C (1013hPa), whereby the entire evaporation process takes place at much lower temperatures and a lower heating power. The pressure can be varied via the cooling circuit. Negative pressure (vacuum) can be generated by a water jet pump in the cooling circuit.

The well-structured instructional material sets out the fundamentals and provides a step-by-step guide through the experiments.

Learning Objectives / Experiments

observation of typical forms of evaporation
- single phase liquid flow
- sub-cooled boiling
- slug flow
- annular flow
- film boiling
- dispersed flow
- single phase vapour flow
- wet steam

effect on the evaporation process by
- flow rate
- temperature
- pressure

WL 210 Evaporation Process

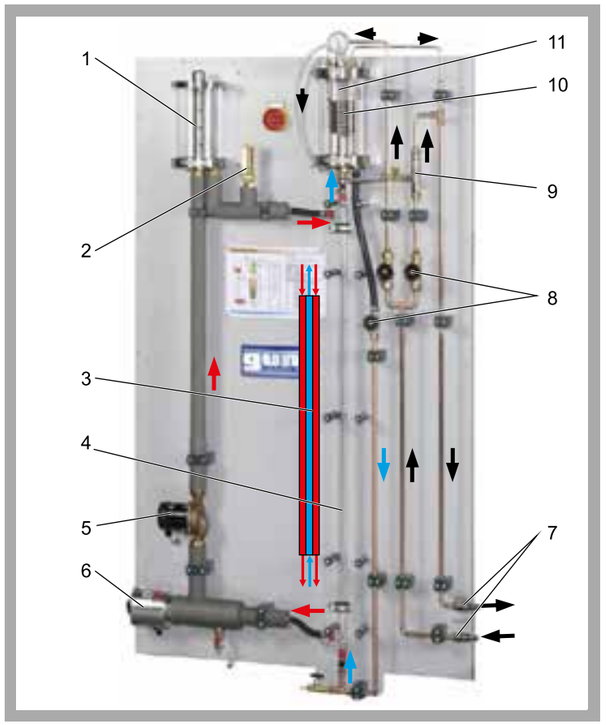

1 heating circuit tank, 2 thermometer, 3 tube evaporator, schematic drawing, 4 tube evaporator, 5 pump, 6 heater, 7 cooling water connection, 8 valves, 9 water jet pump, 10 tube coil, 11 collector with manometer and safety valve; red: heating circuit, blue: evaporation circuit, black: cooling circuit

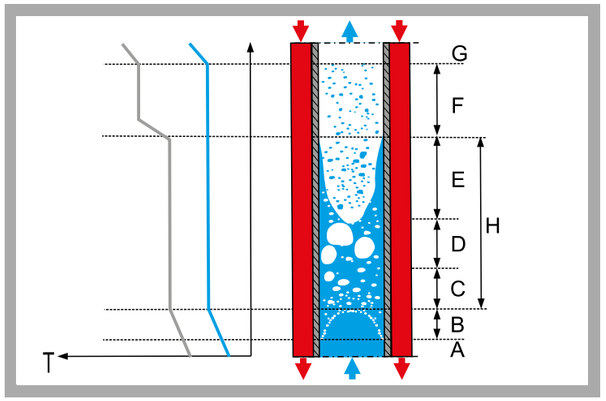

Evaporation in a tube evaporator:
A subcooled fluid, B initial boiling point, C bubbly flow, D slug flow, E annular flow, F dispersed flow, G superheated vapour, H boiling range; blue: fluid temperature, grey: heating surface temperature

Specification

[1] visualisation of evaporation in a tube evaporator
[2] heating and cooling medium: water
[3] tube evaporator made of double-wall glass
[4] heating circuit with heater, pump and expansion vessel
[5] safety valve protects against overpressure in the system
[6] cooling circuit with water jet pump to generate negative pressure (vacuum)
[7] evaporation circuit with CFC-free evaporating liquid Solkatherm SES36

Technical Data

Heater
- power rating: 2kW
- temperature range: 5...80°C

Heating and cooling medium: water

Pump
- 3 stages
- max. flow rate: 1,9m³/h
- max. head: 1,5m
- power consumption: 58W

Tube evaporator
- length: 1050mm
- inner diameter: 16mm
- outer diameter: 24mm

Condenser: coiled tube made of copper

Measuring ranges
- pressure: -1...1,5bar relative
- temperature: 0...100°C

Dimensions and Weight

LxWxH: 1250x790x1970mm
Weight: approx. 170kg

Required for Operation

230V, 50/60Hz, 1 phase or 120V, 60Hz/CSA, 1 phase
Water connection: 500mbar, min. 320L/h; drain

Scope of Delivery

1 trainer
1kg refrigerant Solkatherm SES36
1 set of hoses
1 set of instructional material

Order Details

060.21000 WL 210 Evaporation Process

G.U.N.T Gerätebau GmbH, Hanskampring 15-17, D-22885 Barsbüttel, Phone +49 (40) 67 08 54-0, Fax +49 (40) 67 08 54-42, E-mail sales@gunt.de, Web http://www.gunt.de
We reserve the right to modify our products without any notifications.

WL 220 Boiling Process

*** Visualisation of boiling and evaporation**

*** Software for data acquisition**

Technical Description

Heating a liquid over a heating surface produces different modes of boiling dependent on the heat flux density. They can accelerate the evaporation process (nucleate boiling) or impair it (film boiling). In practice, a limitation of the heat flux density must be assured in order to prevent damage to the heating surface. This knowledge is applied in practice e.g. when designing steam boilers for steam-powered drives.

The WL 220 experimental unit can be used to demonstrate boiling and evaporation processes in a straightforward manner. The processes take place in a transparent tank. A condenser in the form of a water-cooled tube coil ensures a closed circuit within the tank. Solkatherm SES36 is used as evaporating liquid. Compared with water, this liquid has the advantage that its boiling point is at 36,7°C (1013hPa), whereby the evaporation process takes place at much lower temperatures and a lower heating power.

Sensors record the flow rate of the cooling water, the heating power, pressure and temperatures at all relevant points. The measured values can be read on digital displays. At the same time, the measured values can also be transmitted directly to a PC via USB. The data acquisition software is included.

The well-structured instructional material sets out the fundamentals and provides a step-by-step guide through the experiments.

Learning Objectives / Experiments

- visualisation of different forms of evaporation
- heat transfer
- effect of temperature and pressure on the evaporation process

WL 220 Boiling Process

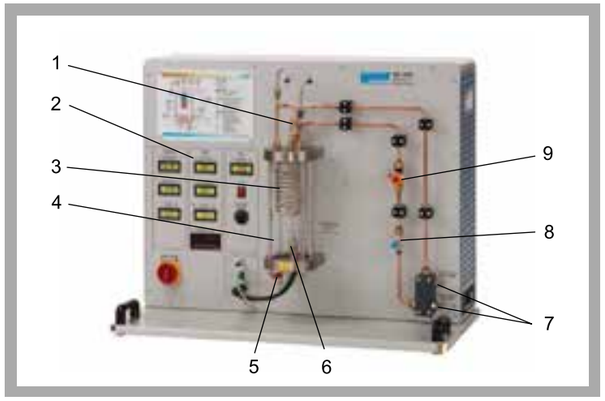

1 safety valve, 2 displays for temperature, flow rate and pressure, 3 condenser, 4 pressure vessel, 5 drain valve for the evaporating liquid, 6 heater, 7 cooling water connection, 8 valve for adjusting the cooling water, 9 cooling water flow rate sensor

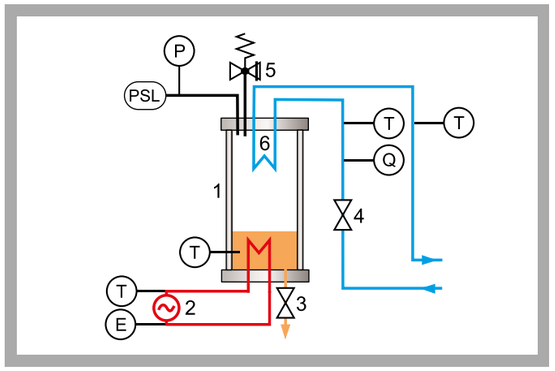

1 pressure vessel, 2 heater, 3 drain valve, 4 cooling water valve, 5 safety valve, 6 condenser; orange: evaporating liquid, red: heater, blue: cooling circuit; PSL pressure switch, E output, T temperature, Q flow rate, P pressure

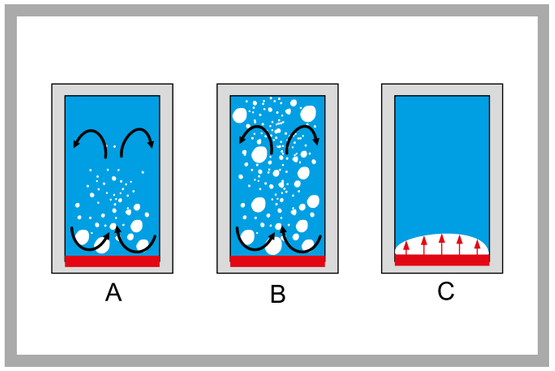

Different modes of boiling: A free convection boiling, B nucleate boiling, C film boiling; red: heater, blue: evaporating liquid, white: steam, black: convection flow

Specification

[1] visualisation of boiling and evaporation in a transparent pressure vessel
[2] evaporation with heating element
[3] condensation with tube coil
[4] safety valve protects against overpressure in the system
[5] pressure switch for additional protection of the heating circuit, adjustable
[6] sensors for pressure, flow rate and temperature with digital display
[7] GUNT software for data acquisition via USB under Windows Vista or Windows 7
[8] CFC-free evaporating liquid Solkatherm SES36

Technical Data

Heater
- power: 250W, continuously adjustable

Safety valve: 2bar rel.
Pressure vessel: 2850mL
Condenser: coiled tube made of copper

Measuring ranges
- tank pressure: 0...4bar abs.
- power of heater: 0...300W
- flow rate (cooling water): 0,05...1,8L/min
- temperature: 4x 0...100°C

Dimensions and Weight

LxWxH: 900x450x820mm
Weight: approx. 65kg

Required for Operation

230V, 50/60Hz, 1 phase, 120V, 60Hz/CSA, 1 phase
Water connection, drain

Scope of Delivery

1 experimental unit
2kg refrigerant Solkatherm SES36
1 GUNT software CD + USB cable
1 set of hoses
1 set of instructional material

Order Details

060.22000 WL 220 Boiling Process

G.U.N.T Gerätebau GmbH, Hanskampring 15-17, D-22885 Barsbüttel, Phone +49 (40) 67 08 54-0, Fax +49 (40) 67 08 54-42, E-mail sales@gunt.de, Web http://www.gunt.de
We reserve the right to modify our products without any notifications.

WL 230 Condensation Process

*** Visualisation of different condensation processes**

*** Software for data acquisition**

Technical Description

Condensation forms when steam meets a medium with a lower temperature than the saturation temperature for the existing partial pressure of the steam. Factors such as the material and surface roughness of the medium influence the heat transfer and thus the type of condensation. In practice, it is usually film condensation. Dropwise condensation only forms when the cooling surface is very smooth and poorly wettable, e.g. Teflon. Knowledge of condensation processes is applied e.g. in steam power plants or at distillation processes.

The WL 230 experimental unit can be used to demonstrate the different condensation processes using two tubular shaped water-cooled condensers made of different materials. Dropwise condensation can be demonstrated by means of the condenser with a polished gold-plated surface. Film condensation forms on the matt copper surface of the second condenser, thus making it possible to examine film condensation.

The tank can be evacuated via a water jet pump in order to vary the pressure in the tank together with the heating temperature and to set the boiling point. Sensors record the temperature, pressure and flow rate at all relevant points. The measured values can be read on digital displays. At the same time, the measured values can also be transmitted directly to a PC via USB. The data acquisition software is included. The heat transfer coefficient is calculated from the measured values. The influence of non-condensing gases, pressure and the temperature difference between the surface and steam can be examined in further experiments. The well-structured instructional material sets out the fundamentals and provides a step-by-step guide through the experiments.

Learning Objectives / Experiments

- dropwise and film condensation
- determination of the heat transfer coefficient
- effect of pressure, temperature and non-condensable gases on the heat transfer coefficient

WL 230 Condensation Process

1 condensers, 2 heat exchanger, 3 steam trap, 4 displays for temperature, flow rate and pressure, 5 heater, 6 cooling water connections, 7 water jet pump, 8 temperature sensor, 9 valve for adjusting the cooling water, 10 cooling water flow rate sensor

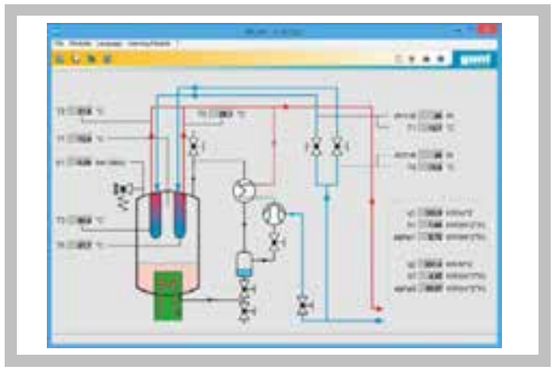

Software screenshot

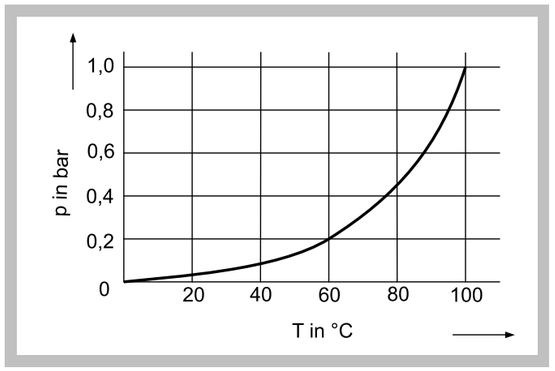

Vapour pressure curve for water: p pressure, T temperature

Specification

[1] visualisation of the condensation process of water in a transparent tank
[2] two water-cooled tubes as condensers with different surfaces to realise film condensation and dropwise condensation
[3] controlled heater to adjust the boiling temperature
[4] water jet pump to evacuate the tank
[5] pressure switch and safety valve for safe operation
[6] sensors for temperature, pressure and flow rate with digital display
[7] GUNT software for data acquisition via USB under Windows Vista or Windows 7

Technical Data

Heater
- output: 3kW, freely adjustable

Condenser
- 1x tube with matt copper surface
- 1x tube with a polished gold-plated surface

Water jet pump
- flow rate: 4...12L/min
- max. delivery pressure: 16mbar

Safety valve: 2200mbar absolute

Measuring ranges
- pressure: 0...10bar absolute
- flow rate: 0,2...6L/min
- temperature: 4x 0...100°C, 3x 0...200°C

Dimensions and Weight

LxWxH: 1000x550x790mm
Weight: approx. 85kg

Required for Operation

230V, 50/60Hz, 1 phase or 230V, 60Hz/CSA, 3 phases
Water connection: 1bar, max. 1000L/h, drain

Scope of Delivery

1 experimental unit
5L distilled water
1 set of hoses
1 GUNT software CD + USB cable
1 set of instructional material

Order Details

060.23000 WL 230 Condensation Process

G.U.N.T Gerätebau GmbH, Hanskampring 15-17, D-22885 Barsbüttel, Phone +49 (40) 67 08 54-0, Fax +49 (40) 67 08 54-42, E-mail sales@gunt.de, Web http://www.gunt.de
We reserve the right to modify our products without any notifications.

ET 805.50 Determination of the Vapour Content

*** Two different ways to determine the vapour content**

Technical Description

The vapour content x is a dimensionless ratio between 0 and 1. It is defined by the ratio of mass of vapour and total mass. The total mass is calculated from the sum of fluid mass and vapour mass. If the vapour content is x=0, the evaporation medium is completely liquid, x=1 means dry saturated vapour, a value in between means wet steam with a variable liquid content. Separating and throttling calorimeters are used to determine the vapour content. In practice, devices to determine the vapour content are used in steam power plants, downstream of steam turbines or at steam boilers upstream of the superheater.

The ET 805.50 trainer uses a two-stage method to determine the vapour content. A separating calorimeter with cyclone water separator is used to determine vapour contents with a high liquid content (0,5<x<0,95). The liquid part is separated, cooled and collected in a measuring beaker.

A downstream throttling calorimeter is used to determine vapour contents between x=0,95 and x=1. The wet steam is depressurised in this process. The remaining vapour part is depressurised and then liquefied in a water-cooled condenser and also collected in a measuring beaker. The two quantities can be used to determine vapour mass and total mass to calculate the vapour content.

Sensors measure the pressure and temperature before and after depressurisation. The measuring results can be used to determine the vapour content with the h-s diagram.

The water vapour has to be generated externally, e.g. with the electrical steam generator WL 315.02. To determine the vapour content of the steam power plants ET 805, ET 830, ET 850 or ET 833, ET 805.50 is recommended.

The well-structured instructional material sets out the fundamentals and provides a step-by-step guide through the experiments.

Learning Objectives / Experiments

- determining the vapour content using
  - * a separating calorimeter with cyclone water separator
  - * a throttling calorimeter with vapour depressurisation
- using an h-s diagram

ET 805.50 Determination of the Vapour Content

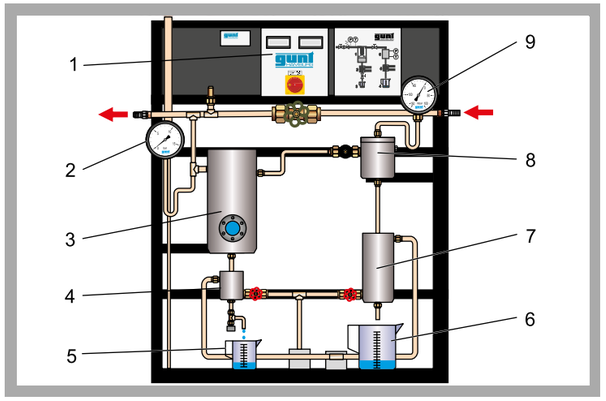

1 displays for temperature, 2 vapour inlet manometer, 3 cyclone water separator, 4 cooler for separated water, 5 measuring beaker for separated water, 6 measuring beaker for liquefied vapour, 7 condenser, 8 tank for depressurising the vapour, 9 manometer for depressurisation process; red: vapour inlet and outlet

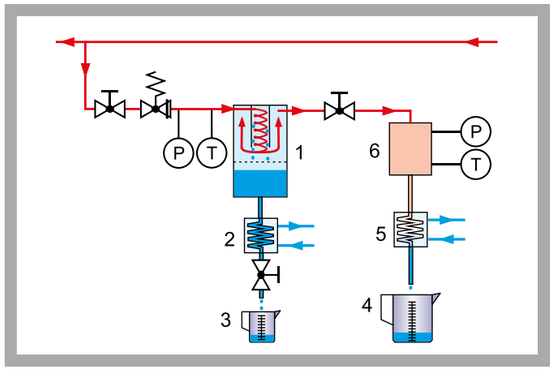

1 water separator with cyclone, 2 cooler, 3 measuring beaker for separated water, 4 measuring beaker for liquefied vapour, 5 condenser, 6 tank for depressurising the vapour; red: wet steam, orange: depressurised steam, blue: water; P pressure, T temperature

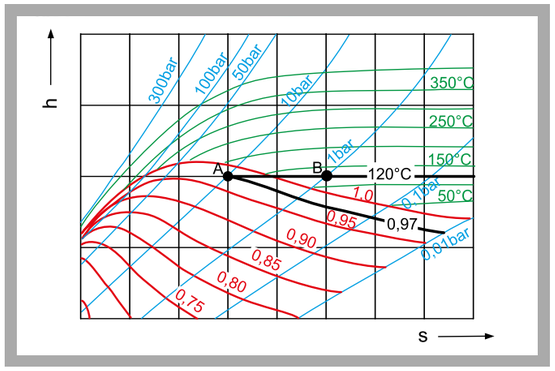

h-s diagram; h enthalpy, s entropy; red: vapour content, green: temperature, blue: pressure; black: example of measuring result: A steam at 10bar, B steam after adiabatic depressurisation at 1bar, vapour content 0,97

Specification

[1] two different ways to determine the vapour content
[2] separating calorimeter for vapour content 0,5<x<0,95, with water-cooled aftercooler
[3] throttling calorimeter for vapour content x>0,95, with water-cooled condenser
[4] safety valve for safe operation
[5] water vapour has to be supplied by an external steam generator, e.g. electrical steam generator WL 315.02
[6] accessory for steam power plants ET 805, ET 830, ET 850 or ET 833

Technical Data

Supplied steam
- max. temperature: 240°C
- max. pressure: 10bar

Safety valve: 10bar

Measuring ranges
- temperature: 0...400°C
- pressure (intake): 0...16bar
- pressure (after expansion): -150...100mbar

Dimensions and Weight

LxWxH: 890x600x1890mm
Weight: approx. 90kg

Required for Operation

230V, 50/60Hz, 1 phase or 120V, 60Hz/CSA, 1 phase
Steam: max. 10bar, 240°C, water connection, drain

Scope of Delivery

1 trainer
2 measuring beakers
1 set of tools
1 set of instructional material

Order Details

061.80550 ET 805.50 Determination of the Vapour Content

G.U.N.T Gerätebau GmbH, Hanskampring 15-17, D-22885 Barsbüttel, Phone +49 (40) 67 08 54-0, Fax +49 (40) 67 08 54-42, E-mail sales@gunt.de, Web http://www.gunt.de
We reserve the right to modify our products without any notifications.

ET 850 Steam Generator

*** Laboratory-scale steam generator for wet or overheated steam**

*** Characteristic values of a steam boiler**

*** Various safety and monitoring devices**

*** Analysis of the measured values at the PC**

*** Setting up a complete steam power plant in conjunction with the ET 851 steam turbine**

Technical Description

A steam generator generates water vapour which will later be used in combined heat and power stations or machine drives. Steam generators and steam consumers together form a steam power plant. Steam power plants work according to the steam power process which is still one of the most important industrially used cyclic processes. Steam power plants are mainly used for electrical power generation.

The ET 850 steam generator and the ET 851 axial steam turbine together form a complete laboratory-scale steam power plant.

The ET 850 trainer serves to familiarise students with the components and principle of operation of a steam generator and enables them to examine the characteristic values of the system. The numerous safety devices of the steam generator can be tested and checked using various monitoring devices.

If the steam generator is operated without the steam turbine, the generated steam is directly liquefied in a condenser and fed back into the evaporation circuit via a tank.

As all components are clearly arranged on the front panel, the cyclic process can be easily monitored and understood. Sensors record the temperature, pressure and flow rate at all relevant points. The measured values can be read on digital displays. At the same time, the measured values can also be transmitted directly to a PC via USB. The data acquisition software is included.

The steam generator has been constructed according to the German "Technische Regeln Dampf" (TRD) (Technical Regulations for Steam), pressure-tested and is equipped with all legally required safety devices.

The well-structured instructional material sets out the fundamentals and provides a step-by-step guide through the experiments.

Learning Objectives / Experiments

- familiarisation with and analysis of the specific characteristic values of a steam boiler
- efficiency of a steam generator
- analysis of the exhaust gases
- influence of different burner settings
- saturation temperature and pressure
- steam enthalpy
- determination of the heat flux density and the overall heat transfer coefficient

ET 850 Steam Generator

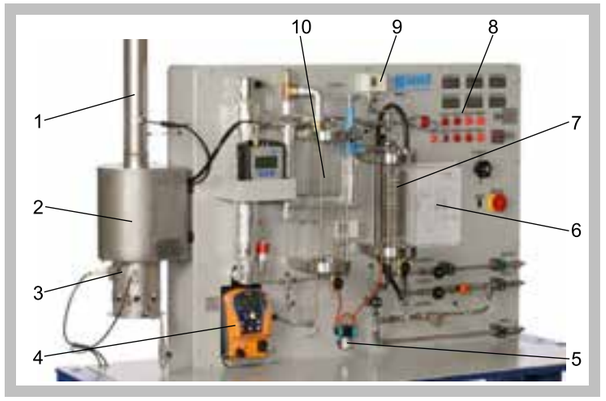

1 chimney, 2 steam boiler, 3 burner, 4 feed water pump, 5 condensate pump, 6 process schematic, 7 condenser, 8 displays and controls, 9 pressure switch, 10 tank

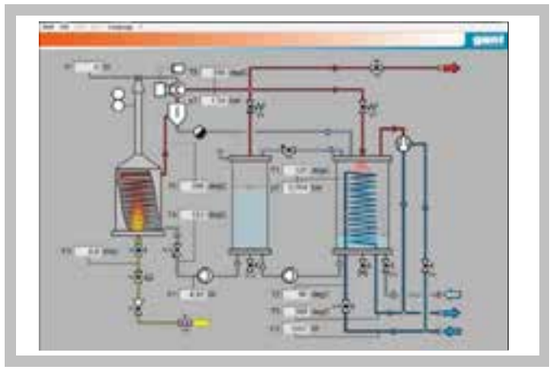

Software screenshot: process schematic

Left: ET 850 steam generator; right: ET 851 axial steam turbine; set up ready for operation, together they form a steam power plant

Specification

[1] trainer with gas-powered heater for steam generation
[2] ET 851 steam turbine can be connected to operate a steam power plant
[3] condenser as a thick-walled glass cylinder with water-cooled tube coil and water jet pump for air extraction
[4] closed-circuit feed water supply
[5] sensor for temperature, pressure, flow rate
[6] exhaust gas analysis with exhaust gas analyser
[7] GUNT software for data acquisition via USB under Windows Vista or Windows 7

Technical Data

Burner
- heating power: 8kW

Measuring ranges
- temperature: 0...400°C
- pressure
  condenser: 0...1,6bar abs.
  live steam: 0...16bar
- power consumption
  superheater: 750W
- flow rate
  gas: 0...14L/min
  cooling water: 0...720L/h
  feed water: 0...15L/h

Dimensions and Weight

LxWxH: 1830x790x1770mm (without chimney)
Weight: approx. 280kg

Required for Operation

230V, 50/60Hz, 1 phase or 120V, 60Hz, 1 phase
Gas supply (propane): 700g/h, 50mbar
Water connection: 720L/h, 2bar, drain
Ventilation and exhaust gas routing required

Scope of Delivery

1 trainer
1 GUNT software CD + USB cable
1 exhaust gas analyser
1 packing unit of distilled water (20L)
1 set of tools
1 set of instructional material

Order Details

061.85000 ET 850 Steam Generator

ET 350 Changes of State in the Refrigeration Circuit

*** Refrigeration circuit demonstrated clearly**

*** Transparent components offer insights into the changes of state**

*** Energetic analyses of the refrigeration cycle**

Technical Description

In a compression refrigeration system a refrigerant flows through the refrigeration circuit and is subject to different changes of state. Here, the physical effect is used that during the transition of the refrigerant from a liquid to a gaseous state energy is required which is removed from the environment (evaporation enthalpy).

The experimental unit ET 350 represents a typical refrigeration circuit consisting of a hermetic piston compressor, condenser, expansion valve and evaporator. The evaporator and condenser are transparent to provide good monitoring of the phase transition process during evaporation and condensation. The operation of the float valve as expansion valve is also easy to observe. Before the entry into the evaporator the aggregate state of the refrigerant can be monitored at a sight glass. A water circuit cools the condenser or supplies the cooling load for the evaporator. Cold and hot water and refrigerant flows are adjustable. The low pressure level of the refrigerant SES36 used permits the use of an evaporator and condenser out of glass. The refrigerant is CFC-free and environmentally friendly.

Temperatures and pressures are recorded and displayed. The key points of the cyclic process can be read and entered into a log p-h diagram. The power of the compressor and flow rates of the water flows and the refrigerant are also indicated.

The well-structured instructional material sets out the fundamentals and provides a step-by-step guide through the experiments.

Learning Objectives / Experiments

- design and operation of a compression refrigeration system
- observe the evaporation and condensation of the refrigerant
- represent and understand the refrigeration cycle in the log p-h diagram
- energy balances
- calculation of the coefficient of performance

ET 350 Changes of State in the Refrigeration Circuit

1 pressure switch, 2 flow meter, 3 condenser, 4 expansion valve, 5 compressor, 6 evaporator, 7 sight glass, 8 temperature display, 9 manometer

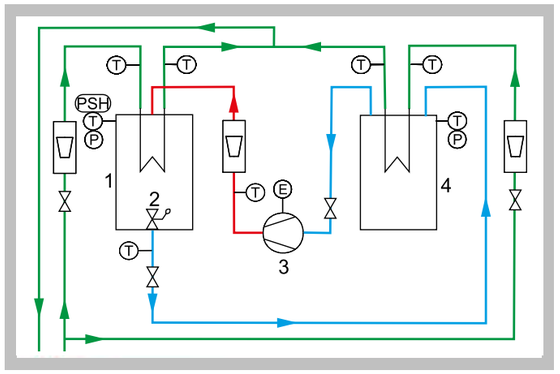

1 condenser, 2 expansion valve, 3 compressor, 4 evaporator; T temperature, P pressure, E electrical power, PSH pressure switch; blue: low pressure, red: high pressure, green: water

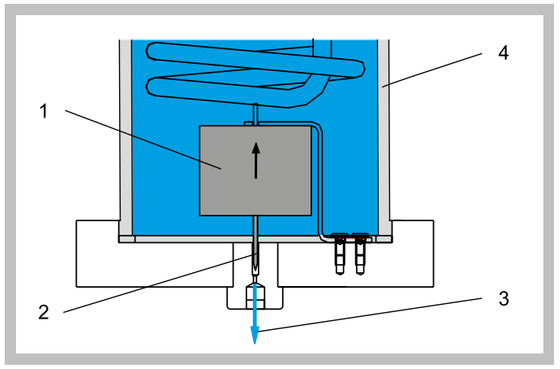

Expansion valve in the shape of a float valve: 1 float lifts the needle from the valve seat, 2 needle, 3 refrigerant escapes, 4 tank

Specification

[1] demonstration of the processes in a refrigeration circuit
[2] for better process monitoring the evaporator and condenser are of transparent design
[3] evaporator and condenser with pipe coil
[4] expansion valve in the shape of a float valve
[5] pressure switch to protect the compressor
[6] temperature sensor, power meter, manometer in the refrigeration circuit, flow meter for hot and cold water and refrigerant
[7] safety valves at the evaporator and condenser
[8] refrigerant Solkatherm SES36, CFC-free

Technical Data

Hermetic piston compressor
- capacity: 18,3cm³

Evaporator capacity: approx. 2800mL
Condenser capacity: approx. 2800mL

Measuring ranges
- temperature: 8x -20...200°C
- pressure: 2x -1...1,5bar
- flow rate (water): 2x 0...48L/h
- flow rate (refrigerant): 1x 0...700L/h
- power: 0...1200W

Dimensions and Weight

LxWxH: 1200x500x900mm
Weight: approx. 110kg

Required for Operation

230V, 50/60Hz, 1 phase or 120V, 60Hz/CSA, 1 phase
Water connection, drain

Scope of Delivery

1 experimental unit
3,5kg refrigerant Solkatherm SES36
1 set of supply hoses
1 set of instructional material

Order Details

061.35000 ET 350 Changes of State in the Refrigeration Circuit

G.U.N.T Gerätebau GmbH, Hanskampring 15-17, D-22885 Barsbüttel, Phone +49 (40) 67 08 54-0, Fax +49 (40) 67 08 54-42, E-mail sales@gunt.de, Web http://www.gunt.de
We reserve the right to modify our products without any notifications.

CE 110 Diffusion in Liquids and Gases

*** Diffusive mass transport of substances in gases and aqueous solutions**

*** Application of Fick's law**

Technical Description

Diffusion is the microscopic mass transport of particles such as atoms, molecules and ions due to differences in concentrations. It plays an important role in numerous processes. For example, diffusion can bring together the reactants in chemical reactions and, in some cases, it can be the rate-limiting step for the process.

CE 110 is equipped with two experimental units for investigating diffusion in liquids and gases. To investigate diffusion in liquids, a concentrated salt solution is used. The solution is contained in a U-tube, one end of which has a disc with several vertical capillaries. The U-tube is immersed into a tank containing demineralised water so that the disc with the capillaries is positioned below the surface of the water. The concentration gradient between water and the solution causes the salt ions to move out of the U-tube through the capillaries into the demineralised water. The capillaries ensure that the ions move in one dimension. A stirrer in the tank prevents the salt concentration increasing near to the disc, thus preventing concentration differences in the tank. A conductivity meter measures the salt concentration in the tank.

To investigate diffusion in gases, a highly volatile solvent is used. The solvent is contained in a vertical tube which is immersed into a heated water bath. The thermal energy from the water bath causes the solvent to evaporate. A fan generates an air flow, which moves horizontally at the upper end of the tube. The gaseous solvent diffuses due to the concentration gradient from the surface of the liquid solvent upwards to the pure air flow. The air flow transports the solvent molecules away, thus ensuring a constant concentration at the upper end of the tube. The volume of liquid solvent in the tube decreases over time. A scale microscope enables the level to be determined. A heater with controller keeps the temperature in the water bath constant.

The well-structured instructional material sets out the fundamentals and provides a step-by-step guide through the experiments.

Learning Objectives / Experiments

- fundamentals of diffusion: Fick's law
- derivation of the calculation formula for the diffusion coefficients for the given experimental conditions
- determination of the diffusion coefficient for the mass transport in gas
- determination of the diffusion coefficient for the mass transport in liquid

CE 110 Diffusion in Liquids and Gases

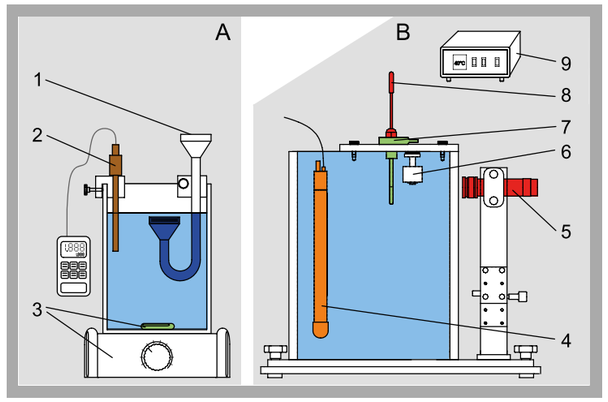

Units for diffusion in liquids (A) and in gases (B):
1 U-tube with capillaries, 2 conductivity sensor, 3 magnetic stirrer with magnetic stir bar, 4 heater in the water bath, 5 microscope, 6 float switch, 7 diffusion tube, 8 temperature sensor, 9 display and control unit

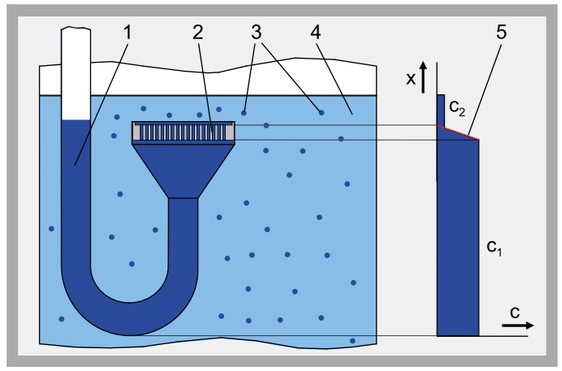

Diffusion in liquids: 1 concentrated salt solution, 2 capillaries, 3 salt ions, 4 water, 5 concentration gradient;
x path, c concentration, c_1 concentrated solution, c_2 diluted solution

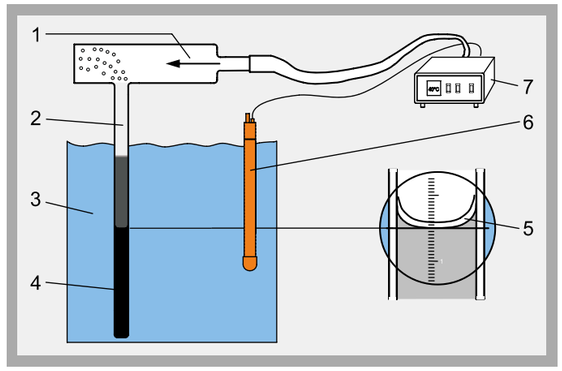

Diffusion in gases: 1 air flow, 2 gaseous solvent, 3 water bath, 4 liquid solvent, 5 meniscus in the microscope, 6 heater, 7 display and control unit

Specification

[1] investigation of diffusion in liquids and gases
[2] transparent tank with magnetic stirrer, conductivity meter and U-tube with capillaries for investigating diffusion in aqueous solutions
[3] evaporation of a highly volatile solvent with a diffusion tube in a heated water bath for investigating diffusion in gases
[4] removal of gaseous solvent at the upper end of the diffusion tube with a fan
[5] heater with controller and sensor for adjusting the temperature in the water bath
[6] height-adjustable microscope for monitoring and determining the solvent volume in the diffusion tube
[7] separate display and control unit contains temperature controller and fan

Technical Data

Tank with stirrer: approx. 1500mL
Speed stirrer: 0...1500min^{-1}
253 capillaries made of stainless steel
- diameter: 1mm, length: 5mm

Water bath: approx. 2L
Diffusion tube for solvent
- diameter: 3,4mm, length: 85mm
Power output heater: approx. 150W
Fan: 120...320L/h
Microscope scale division: 0,1mm

Measuring ranges
- temperature: 0...100°C
- conductivity: 0...200mS/cm

Dimensions and Weight

LxWxH: approx. 210x210x280mm
(experimental unit for diffusion in liquids)
LxWxH: approx. 220x290x450mm
(experimental unit for diffusion in gases)
LxWxH: approx. 370x340x200mm
(display and control unit)
Weight: approx. 16kg

Required for Operation

230V, 50/60Hz, 1 phase or 120V, 60Hz/CSA, 1 phase

Scope of Delivery

1 experimental unit for diffusion in liquids
1 experimental unit for diffusion in gases
1 display and control unit
1 conductivity meter
1 magnetic stirrer with 2 magnetic stir bars
1 stopwatch
1 set of instructional material

Order Details

083.11000 CE 110 Diffusion in Liquids and Gases

G.U.N.T Gerätebau GmbH, Hanskampring 15-17, D-22885 Barsbüttel, Phone +49 (40) 67 08 54-0, Fax +49 (40) 67 08 54-42, E-mail sales@gunt.de, Web http://www.gunt.de
We reserve the right to modify our products without any notifications.

WL 352 Heat Transfer by Convection

*** Free and forced convection in an air flow**

*** 3 interchangeable heating elements with different heat transfer surfaces**

Technical Description

Convection is one of the three basic types of heat transfer. The heat transport is substance-bound. In the convection process, the whole fluid is moving. So-called bulks of fluid move (and thus transfer heat) from warm zones into cold zones. The different temperatures lead to density differences in the fluid so that a flow develops. In the case of free convection, the density differences result in a rather slow flow of the fluid with a more intensive heat transfer. In the case of forced convection, the flow is generated by a fan or pump. In this case, the heat transfer to fluid particles is lower, but more heat is transported than with free convection due to the much larger mass flow.

The core element of the WL 352 experimental unit is a vertical duct into which a heating element is inserted. Air flows past the heating element and absorbs heat in the process. Three heating elements with different surfaces are available: a flat plate, a tube bundle or fins. For experiments on forced convection, an additional fan has to be activated.

Sensors record the flow velocity of the air, the heating power and the temperatures at all relevant points. The measured values can be read on digital displays. At the same time, the measured values can also be transmitted directly to a PC via USB. The data acquisition software is included.

The well-structured instructional material sets out the fundamentals and provides a step-by-step guide through the experiments.

Learning Objectives / Experiments

- free and forced convection
- heat transfer at different surfaces:
  * flat plate
  * pipe bundle
  * fins
- temperature distribution in the heat exchanger
- determination of the Reynolds and Nusselt numbers
- calculation of heat transfer coefficient for free and forced convection
- calculation of heat transfer rate and efficiency

WL 352 Heat Transfer by Convection

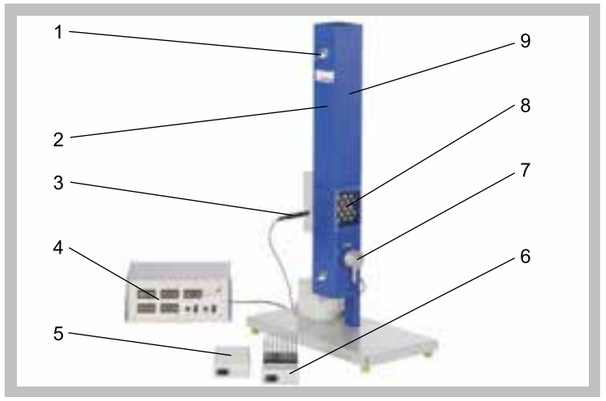

1 temperature sensor, 2 air duct, 3 thermocouple type K, 4 display and control unit, 5 "flat plate" heating element, 6 "finned" heating element, 7 flow sensor, 8 "pipe bundle" heating element, 9 measuring glands for thermocouple

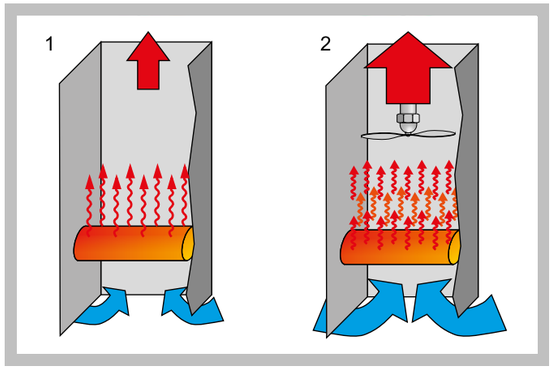

1 free convection at the heating element, 2 forced convection at the heating element; blue arrows: cold air, red arrows: heated air

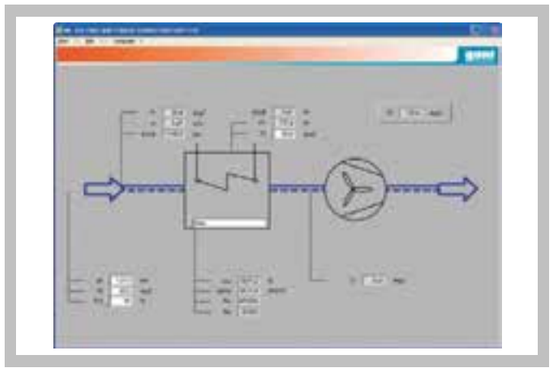

Software screenshot: process schematic

Specification

[1] heat transfer in the air duct by free and forced convection
[2] air duct with axial fan
[3] 3 heating elements with different surfaces: flat plate, tube bundle or fins
[4] sensors measure temperatures (upstream and downstream of the heating element and inside the heating element), flow velocity of the air and heating power
[5] GUNT software for data acquisition via USB under Windows Vista or Windows 7

Technical Data

Air duct
- flow cross-section: 120x120mm
- height: 1m

Axial fan
- max. flow rate: 170m³/h
- max. pressure difference: 54Pa
- power consumption: 6,5W
- nominal speed: 2900min^{-1}

Heating elements
- temperature limitation: max. 120°C
- max. heating power: 170W
- surface of flat plate: 140cm²
- surface of tube bundle: 980cm²
- surface of fins: 1400cm²

Measuring ranges
- flow velocity: 0...10m/s
- temperature: 2x 0...100°C, 1x 0...200°C
- heating power: 0...375W

Dimensions and Weight

LxWxH: 700x350x1200mm (air duct)
LxWxH: 410x410x180mm (display and control unit)
Weight: approx. 43kg

Required for Operation

230V, 50/60Hz, 1 phase or 120V, 60Hz/CSA, 1 phase

Scope of Delivery

1 experimental unit
3 heating elements
1 display and control unit
1 GUNT software CD + USB cable
1 set of instructional material

Order Details

060.35200 WL 352 Heat Transfer by Convection

G.U.N.T Gerätebau GmbH, Hanskampring 15-17, D-22885 Barsbüttel, Phone +49 (40) 67 08 54-0, Fax +49 (40) 67 08 54-42, E-mail sales@gunt.de, Web http://www.gunt.de
We reserve the right to modify our products without any notifications.

WL 372 Heat Transfer by Conduction

*** Demonstration of heat conduction in solid materials**

*** Linear and radial heat conduction**

*** Software to represent the temperature profiles**

Technical Description

Heat conduction is one of the three basic types of heat transfer. Kinetic energy is transferred between two neighbouring atoms or molecules. The heat transport is not substance-bound. This type of heat transfer is an irreversible process in which the heat is transferred from a higher energy level, i.e. a level with a higher absolute temperature, to the lower level with a lower temperature. If the heat transport is kept up constantly by applying heat, this is called stationary heat conduction. In technology, heat conduction is mostly used in heat exchangers.

The WL 372 experimental unit enables users to experimentally determine basic laws and characteristic variables of heat conduction in solids. The experimental unit includes a linear and a radial experimental set-up, each equipped with a heating and cooling element. Various measuring objects with different heat transfer characteristics can be incorporated in the experimental set-up for linear heat conduction. The experimental unit is delivered together with a display and control unit.

Sensors record the temperatures at all relevant points. The measured values can be read on digital displays. At the same time, the measured values can also be transmitted directly to a PC via USB. The data acquisition software is included.

The well-structured instructional material sets out the fundamentals and provides a step-by-step guide through the experiments.

Learning Objectives / Experiments

linear heat conduction (flat wall)
- determination of temperature profiles with different materials
- determination of the temperature profile during a malfunction
- determination of thermal conductivity k

radial heat conduction
- determination of the temperature profile
- determination of thermal conductivity k

WL 372 Heat Transfer by Conduction

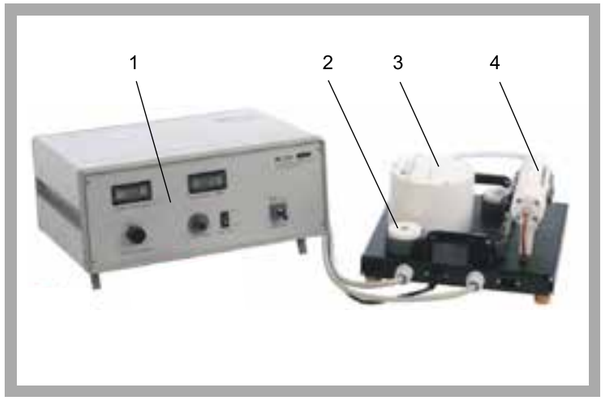

1 display and control unit, 2 measuring object, 3 experimental set-up for radial heat conduction, 4 experimental set-up for linear heat conduction

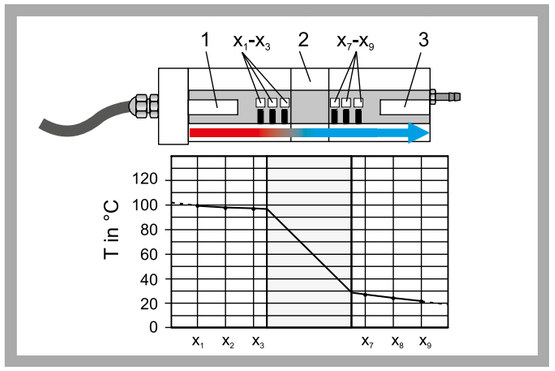

Experimental set-up for linear heat conduction with graphical display of the temperature profile: 1 heater, 2 measuring object, 3 cooling element; x_1-x_3 and x_7-x_9 measuring points

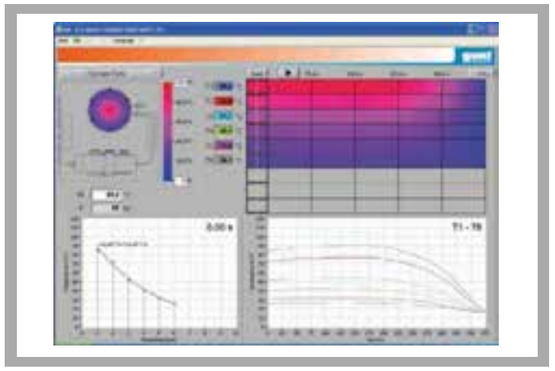

Software screenshot: temperature profile for radial heat conduction

Specification

[1] examination of heat conduction in solids
[2] experimental set-up consisting of experimental unit and display and control unit
[3] linear heat conduction: 3 measuring objects, heating and cooling element, 9 temperature measuring points
[4] radial heat conduction: brass disc with heating and cooling element, 6 temperature measuring points
[5] cooling with mains water
[6] electric heating element
[7] representation of the temperature profiles with GUNT software
[8] GUNT software for data acquisition via USB under Windows Vista or Windows 7

Technical Data

Linear heat conduction
- 3 measuring objects, insulated
- 1x DxL: 25x30mm, steel
- 1x DxL: 15x30mm, brass
- 1x DxL: 30x30mm, brass
- heater: 140W

Radial heat conduction
- disc diameter: 110x4mm
- heater in the middle of the disc: 125W
- cooling coil at outer diameter of disc

Measuring ranges
- temperature: 0...100°C
- power: 0...200W

Dimensions and Weight

LxWxH: 400x360x210mm (experimental unit)
LxWxH: 470x380x210mm (display and control unit)
Weight: approx. 22kg

Required for Operation

230V, 50/60Hz, 1 phase or 120V, 60Hz/CSA, 1 phase
Water connection

Scope of Delivery

1 experimental unit
1 display and control unit
1 set of measuring objects
1 set of hoses
1 GUNT software CD + USB cable
1 set of instructional material

Order Details

060.37200 WL 372 Heat Transfer by Conduction

G.U.N.T Gerätebau GmbH, Hanskampring 15-17, D-22885 Barsbüttel, Phone +49 (40) 67 08 54-0, Fax +49 (40) 67 08 54-42, E-mail sales@gunt.de, Web http://www.gunt.de
We reserve the right to modify our products without any notifications.

WL 373 Heat Conduction in Gases and Liquids

*** Steady-state heat conduction in gases and liquids**

*** Determination of thermal conductivities k of various fluids**

Technical Description

Heat conduction in physics means the transfer of thermal energy between neighbouring atoms and molecules in a solid or in a fluid at rest. The heat transport is substance-bound. The effect of pure heat conduction is hindered in fluids by convection effects. This can be prevented by enclosing the fluids in gaps.

The WL 373 experimental unit serves to examine heat conduction properties of various fluids. The experimental unit is delivered together with a display and control unit.

The core element of the experimental unit is a cylindrical heat exchanger with a heated inner cylinder made of aluminium and a water-cooled jacket. There is a ring-shaped gap between the inner cylinder and the jacket, which is completely filled with the fluid to be examined. The width of the gap is such that the heat transfer by convection is negligible. Due to the low temperature level and polished surfaces, radiation is also negligible.

The thermal conductivities k of various fluids such as water, oil, air, oxygen or carbon dioxide can be determined in experiments. Sensors record the temperatures and the consumed heating power at all relevant points. The measured values can be read on digital displays.

The well-structured instructional material sets out the fundamentals and provides a step-by-step guide through the experiments.

Learning Objectives / Experiments

- steady-state heat conduction in gases and liquids
- determination of thermal conductivities k of various fluids at different temperatures

WL 373 Heat Conduction in Gases and Liquids

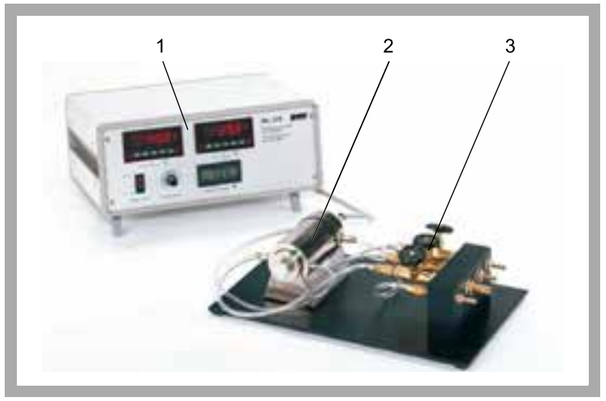

1 display and control unit, 2 heat exchanger with heated inner cylinder and water-cooled jacket, 3 valves for fluid and cooling water

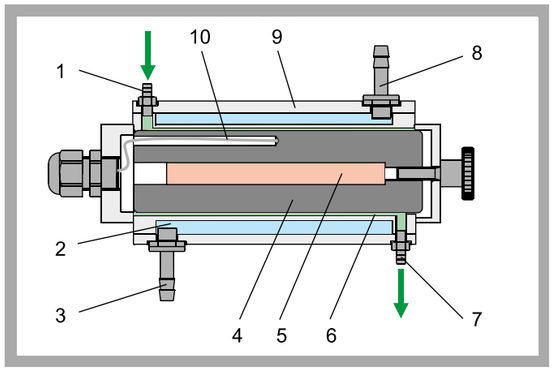

Design of the heat exchanger:
1 fluid inlet, 2 cooling water, 3 cooling water outlet, 4 inner cylinder, 5 heater, 6 gap for fluid (water, oil or air), 7 fluid outlet, 8 cooling water inlet, 9 jacket, 10 temperature sensor; green: fluid (water, oil, air), blue: cooling water, red: heater

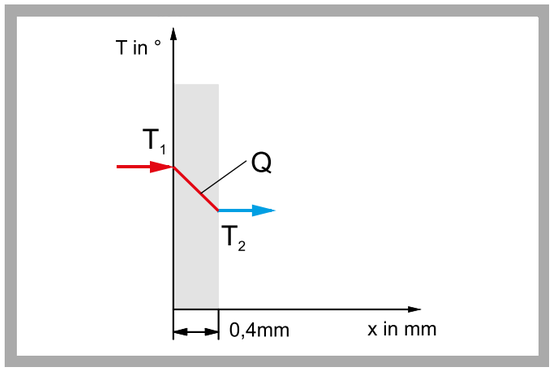

Heat conduction in the gap: Q heat flux in W, T_1 and T_2 in °C

Specification

[1] examination of heat conduction in gases and fluids (water, oil, air)
[2] experimental set-up consisting of experimental unit and display and control unit
[3] heat exchanger with heated inner cylinder and water-cooled jacket
[4] the fluid to be examined is in the ring-shaped gap between inner cylinder and jacket
[5] heat transfer by convection and radiation negligible due to small gap dimensions, low temperatures and polished surfaces
[6] adjustable electric heater
[7] valves for adjusting the flow rates in the cooling water and in the fluid
[8] sensors for temperatures and electric heating power
[9] digital displays for temperature difference and heating power

Technical Data

Heat exchanger
- effective heat transfer area: 1500cm²
- mean effective diameter: 39,6mm
- gap width: 0,4mm

Heater
- max. power consumption 160W
- switch-off: at 95°C

Measuring ranges
- temperature: 0...100°C
- power: 0...600W

Dimensions and Weight

LxWxH: 400x250x180mm (experimental unit)
LxWxH: 410x400x180mm (display and control unit)
Weight: approx. 15kg

Required for Operation

230V, 50/60Hz, 1 phase or 120V, 60Hz/CSA, 1 phase
Water connection, drain

Scope of Delivery

1 experimental unit
1 display and control unit
1 set of instructional material

Order Details

060.37300 WL 373 Heat Conduction in Gases and Liquids

G.U.N.T Gerätebau GmbH, Hanskampring 15-17, D-22885 Barsbüttel, Phone +49 (40) 67 08 54-0, Fax +49 (40) 67 08 54-42, E-mail sales@gunt.de, Web http://www.gunt.de
We reserve the right to modify our products without any notifications.

WL 377 Convection and Radiation

*** Heat transport between heating element and vessel wall by convection and radiation**

*** GUNT software for data acquisition**

Technical Description

Under real conditions, the heat transport between two objects is normally substance-bound, i.e. convection and/or heat conduction, and not substance-bound, i.e. radiation, at the same time. Determining the individual heat quantities of one type of transfer is difficult.

The WL 377 trainer enables users to match the individual heat quantities to the corresponding type of transfer. The core element is a metal cylinder in a pressure vessel. A temperature-controlled heating element is located at the centre of the cylinder. Sensors capture the wall temperature of the cylinder, the heating temperature and the heating power. This metal cylinder is used to examine the heat transfer between the heating element and the vessel wall.

The pressure vessel can be put under vacuum or positive gauge pressure. In the vacuum, heat is transported primarily by radiation. If the vessel is filled with gas and is under positive gauge pressure, heat is also transferred by convection. It is possible to compare the heat transfer in different gases. In addition to air, nitrogen, helium, carbon dioxide or other gases are also suitable.

A rotary vane pump generates negative pressures down to approx. 0,02mbar. Positive gauge pressures up to approx. 1bar can be realised with compressed air. Two pressure sensors with suitable measuring ranges are available for the pressure measurement: the negative pressure is captured with a Pirani sensor; a piezo-resistive sensor is used for experiments with a filled cylinder.

The measured values can be read on digital displays. At the same time, the measured values can also be transmitted directly to a PC via USB, where they can be analysed with the GUNT software.

The well-structured instructional material sets out the fundamentals and provides a step-by-step guide through the experiments.

Learning Objectives / Experiments

experiments in vacuum:
- heat transfer by radiation
- determination of the radiation coefficient

experiments at ambient pressure or positive gauge pressure:
- heat transfer by convection and radiation
- determination of the heat quantity transferred by convection
- determination of the heat transfer coefficient based on measured values
- theoretical determination of the heat transfer coefficient based on the Nusselt number
- comparison of the heat transfer in different gases

WL 377 Convection and Radiation

1 temperature controller with temperature display, 2 temperature display, 3 power display, 4 vacuum pump, 5 pressure vessel, 6 vessel's absolute pressure display, 7 vessel's relative pressure display

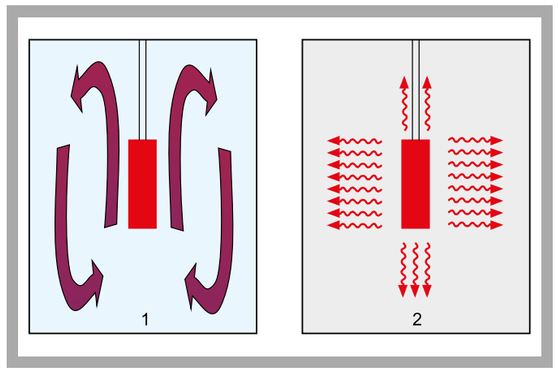

Heat transfer in the vessel:
1 convection (vessel filled with gas), 2 radiation (vessel filled with vacuum)

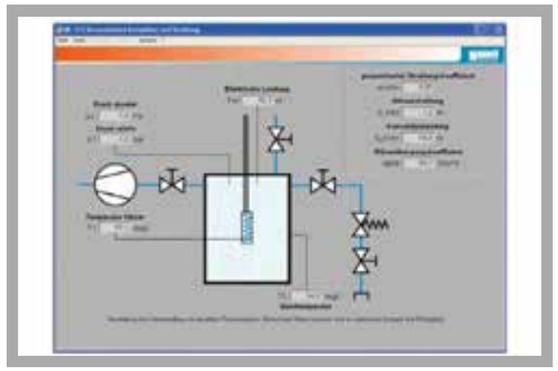

Software screenshot: process schematic

Specification

[1] heat transfer between heating element and vessel wall by convection and radiation
[2] operation with various gases possible
[3] experiments in vacuum or at a slight positive gauge pressure
[4] electrically heated metal cylinder in the pressure vessel as experimental vessel
[5] temperature-controlled heating element
[6] vacuum generation with rotary vane pump
[7] instrumentation: 1 temperature sensor at the heater, 1 temperature sensor at the vessel wall, 1 power sensor at the heating element, 1 Pirani pressure sensor, 1 piezo-resistive pressure sensor
[8] digital displays for temperature, pressure and heating power
[9] GUNT software for data acquisition via USB under Windows Vista or Windows 7

Technical Data

Heating element
- output: 20W
- radiation surface area: approx. 61cm²

Pump for vacuum generation
- power consumption: 370W
- nominal suction capacity: 5m³/h
- final pressure with gas ballast: $20*10^{-3}$mbar
- final pressure without gas ballast: $5*10^{-3}$mbar

Measuring ranges
- negative pressure: $0,5*10^{-3}$...1000mbar
- pressure: -1...1,5bar rel.
- temperature: 2x 0...200°C
- output: 0...20W

Dimensions and Weight

LxWxH: 1340x790x1500mm
Weight: approx. 160kg

Required for Operation

230V, 50/60Hz, 1 phase or 120V, 60Hz/CSA, 1 phase
Compressed air: 1500mbar

Scope of Delivery

1 trainer
1 GUNT software CD + USB cable
1 set of instructional material

Order Details

060.37700 WL 377 Convection and Radiation

2E a division of G.U.N.T Gerätebau GmbH, P.O.Box 1125, D-22885 Barsbüttel, t +49 (40)67 08 54-0, f +49 (40)67 08 54-42, E-mail sales@gunt.de
We reserve the right to modify our products without any notifications. Visit our Websites: www.gunt.de | www.gunt2e.de

WL 110 MODULAR HEAT EXCHANGER TRAINING EQUIPMENT

Teaching the fundamentals of heat transfer through experiments

Clear, simple, reliable, progress tracking

WL 110 Heat Exchanger Supply Unit with the WL 110.03 Shell & Tube Heat Exchanger

Perfect educational concept…

The supply unit can accommodate four different types of heat exchangers

…modular, flexible, versatile

WL 110.20 WATER CHILLER

The cold water needed for all the experiments is usually supplied from a laboratory tap. However when the ambient temperature in the laboratory is too high, the water chiller is recommended for reasonable experimental conditions.

Hot water is also needed for the experiments. It is supplied from the service unit WL 110.

INTERCHANGEABLE ACCESSORIES

WL 110.01 Tubular Heat Exchanger

WL 100.04 Jacketed Vessel with Stirrer & Coil

WL 110.02 Plate Heat Exchanger

WL 110.03 Shell & Tube Heat Exchanger

SOFTWARE FOR DATA ACQUISITION

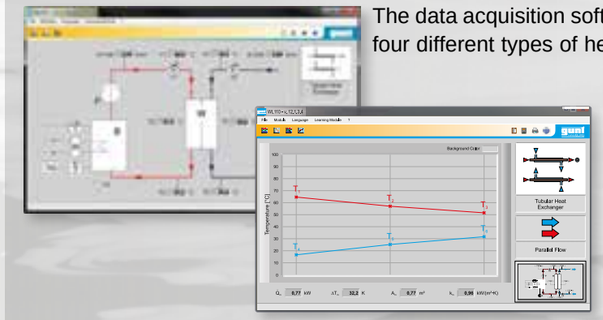

The data acquisition software supports the complete range of experiments with four different types of heat exchangers.

Main features
- temperature curves along the heat exchanger
- selectable parallel flow or counterflow operation
- calculation of heat flows
- calculation of mean heat transfer coefficient

Convenient connection to any PC or laptop via USB.

Learning Objectives

- function and behaviour during operation of different heat exchangers
- plotting temperature curves
  - in parallel flow operation
  - in counterflow operation
- calculation of mean heat transfer coefficient
- comparing different heat exchanger types

Didactic Advantages

Ideally suited for student-centered experiments

A small group of 2 to 3 students can independently and conveniently go through the various experiments.

The lecturer can demonstrate characteristic aspects of heat exchangers in front of a bigger audience when using the data acquisition software and a video projector connected to a PC.

The well-structured instructional material sets out the fundamentals and provides a step-by-step guide through the experiments.

WL 110 Heat Exchanger Supply Unit

*** Heat exchanger supply unit (WL 110.01-WL 110.04)**

*** Heat exchanger operation in parallel flow or counterflow possible**

Technical Description

Heat exchangers transfer thermal energy from the flow of one medium to another. The two flows do not come into direct contact with one another. Efficient heat transfer is a prerequisite for economical processes. Therefore, different heat exchanger types are used in practice depending on the requirements.

This experimental unit can be used to investigate and compare different heat exchanger designs. The complete experimental set-up consists of two main elements: WL 110 as supply and control unit and choice of heat exchanger: Tubular heat exchanger (WL 110.01), plate heat exchanger (WL 110.02), shell and tube heat exchanger (WL 110.03) and jacketed vessel with stirrer and coil (WL 110.04). Water is used as the medium.

The heat exchanger to be investigated is connected to the supply unit. The hot water flows through the heat exchanger. Part of the thermal energy of the hot water is transferred to the cold water. Reversing the water connections changes the direction of flow and thus allows parallel flow or counterflow operation.

The main function of the WL 110 is to provide the required cold and hot water circuits. To do this, the supply unit is equipped with a heated tank and pump for the hot water circuit, connections for the cold water circuit and a switch cabinet with displays and controls. A temperature controller controls the hot water temperature. The flow rate in the hot water and cold water circuit is adjusted using valves. The cold water circuit can be fed from the laboratory mains or the WL 110.20. The measured values can be read on digital displays. At the same time, the measured values can also be transmitted directly to a PC via USB. The data acquisition software is included.

In experiments, the typical characteristic value determined are the mean heat transfer coefficients.

The well-structured instructional material sets out the fundamentals and provides a step-by-step guide through the experiments.

Learning Objectives / Experiments

in conjunction with a heat exchanger (WL 110.01 to WL 110.04)
- plotting temperature curves
- determining the mean heat transfer coefficient
- comparing different heat exchanger types

WL 110 Heat Exchanger Supply Unit

1 temperature controller, 2 temperature displays, 3 flow rate displays, 4 jacketed vessel with stirrer and coil WL 110.04, 5 cold water circuit connections, 6 process schematic, 7 hot water tank

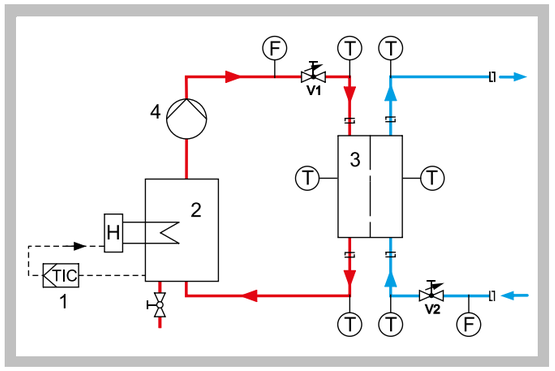

1 temperature controller, 2 heated tank, 3 heat exchanger (WL 110.01 to WL 110.04 accessories), 4 pump; red = hot water circuit, blue = cold water circuit; F flow rate, T temperature

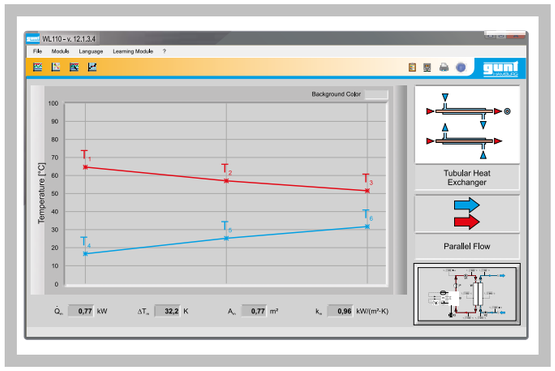

Software screenshot: temperature curve for WL 110.01 in parallel flow operation

Specification

[1] supply unit for heat exchangers
[2] hot water circuit with tank, heater, temperature controller, pump and protection against lack of water
[3] cold water circuit from laboratory mains or water chiller WL 110.20
[4] temperature controller controls the temperature of hot water
[5] flow adjustable using valves
[6] digital displays for 6 temperature and 2 flow rate sensors
[7] water connections with quick-release couplings
[8] stirring machine connection with speed adjustment (WL 110.04)
[9] GUNT software for data acquisition via USB under Windows Vista or Windows 7

Technical Data

Pump
- power consumption: 120W
- max. flow rate: 600L/h
- max. head: 30m

Heater
- power output: 3kW
- thermostat: 0...70°C

Hot water tank: approx. 10L

Measuring ranges
- temperature: 6x 0...100°C
- flow rate: 2x 20...250L/h

Dimensions and Weight

LxWxH: 1000x670x550mm
Weight: approx. 60kg

Required for Operation

230V, 50/60Hz, 1 phase or 230V, 60Hz/CSA, 3 phases
Cooling water 500L/h

Scope of Delivery

1 experimental unit
1 GUNT software CD + USB cable
1 set of instructional material

Order Details

060.11000 WL 110 Heat Exchanger Supply Unit

2E a division of G.U.N.T Gerätebau GmbH, P.O.Box 1125, D-22885 Barsbüttel, t +49 (40)67 08 54-0, f +49 (40)67 08 54-42, E-mail sales@gunt.de
We reserve the right to modify our products without any notifications. Visit our Websites: www.gunt.de | www.gunt2e.de

WL 110.01 *Tubular Heat Exchanger*

*** Tubular heat exchanger for connection to WL 110 supply unit**

*** Visible flow channel due to transparent outer tube**

Technical Description

Tubular heat exchangers represent the simplest type of heat exchangers and are the preferred solution for transferring heat with high pressure differences or between high viscosity media (e.g. sludge). An advantage is the uniform flow through the tube space. This space is free of flow dead zones.

The WL 110.01 is part of a series of units enabling experiments to be performed on different heat exchanger types. In conjunction with the WL 110 supply unit, which has a hot and cold water circuit and all of the necessary connections, the experimental unit is ideally suited for investigating the functioning and behaviour of a tubular heat exchanger in operation.

The WL 110.01 is connected to the WL 110 using quick-release couplings. Hot water flows continuously through the inner tube and cold water through the outer tube. Part of the thermal energy of the hot water is transferred to the cold water. Valves on the supply unit are used to adjust the flow rates of hot and cold water. The supply hose can be reconnected using quick-release couplings, allowing the flow direction to be reversed. This allows parallel flow and counterflow operation. Temperature sensors for measuring the inlet and outlet temperatures are located at the supply connections on the WL 110. There are two additional temperature sensors on the tubular heat exchanger for measuring the temperature after half of the transfer section.

During experiments, temperature curves are plotted and displayed graphically. Additionally, the measured values can be recorded and processed using data acquisition software. The mean heat transfer coefficient is then calculated as a characteristic variable.

The well-structured instructional material sets out the fundamentals and provides a step-by-step guide through the experiments.

Learning Objectives / Experiments

in conjunction with WL 110 supply unit
- function and behaviour during operation of a tubular heat exchanger
- plotting temperature curves
  * in parallel flow operation
  * in counterflow operation
- calculation of mean heat transfer coefficient
- comparison with other heat exchanger types

WL 110.01 *Tubular Heat Exchanger*

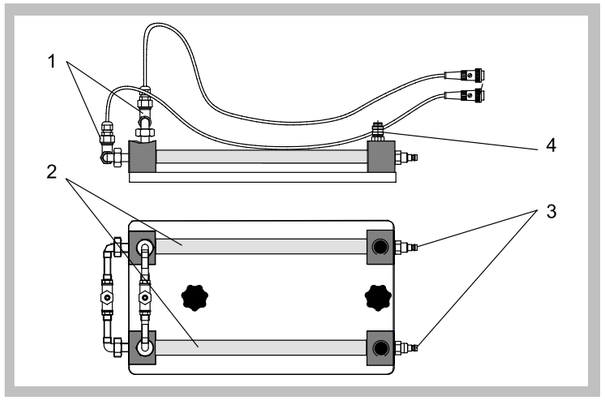

1 temperature sensor, 2 concentric tubes, 3 hot water connections, 4 cold water connections

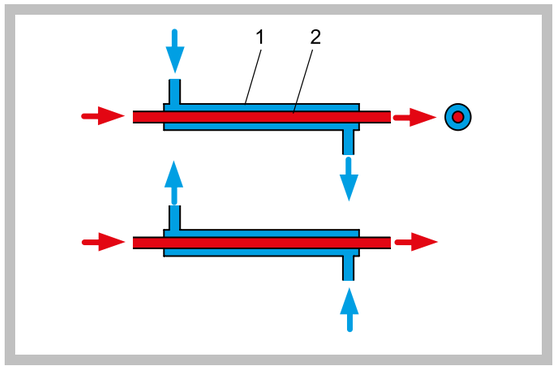

Functional principle of tubular heat exchanger
1 outer tube with cold water, 2 inner tube with hot water;
red: hot water, blue: cold water

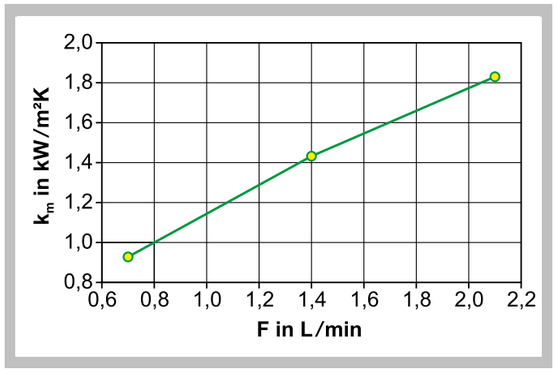

Mean heat transfer coefficient k_m as function of flow rates cold water and hot water

Specification

[1] tubular heat exchanger for connection to WL 110
[2] hot and cold water supply from WL 110
[3] parallel flow and counterflow operation possible
[4] recording of temperature using WL 110 and two additional temperature sensors for measuring the central temperature

Technical Data

Heat transfer areas
- mean transfer area: 250cm²

Inner tube, stainless steel
- outer diameter: 12mm
- wall thickness: 1mm

Outer tube, transparent (PMMA)
- outer diameter: 20mm
- wall thickness: 2mm

Measuring range
- temperature: 2x 0...100°C

Dimensions and Weight

LxWxH: 480x230x150mm
Weight: approx. 4kg

Scope of Delivery

1 tubular heat exchanger
1 set of instructional material

Order Details

060.11001 WL 110.01 Tubular Heat Exchanger

WL 110.02 *Plate Heat Exchanger*

*** Plate heat exchanger for connection to WL 110 supply unit**

Technical Description

The key feature of plate heat exchangers is their compact design, in which optimum use is made of all of the material for heat transfer. The pressed in profile on the plates creates narrow flow channels, in which significant turbulence occurs. The turbulent flow allows effective heat transfer even with low flow rates and also has a self-cleaning effect. Plate heat exchangers are used in the food industry, offshore technology, refrigeration and domestic engineering.

The WL 110.02 is part of a series of units enabling experiments to be performed on different heat exchanger types. In conjunction with the WL 110 supply unit, which has a hot and cold water circuit and all of the necessary connections, the experimental unit is ideally suited for investigating the functioning and behaviour of a plate heat exchanger in operation.

The WL 110.02 is connected to the WL 110 using quick-release couplings. The plate heat exchanger is made up of profiled plates with water flowing through the spaces between them. The plates are soldered in such a way that two separate flow channels are formed. These are one “cold” and one “hot” flow channel, in an alternating arrangement. Hot and cold water flow continuously. Part of the thermal energy of the hot water is transferred to the cold water. Valves on the supply unit are used to adjust the flow rates of hot and cold water. The supply hose can be reconnected using quick-release couplings, allowing the flow direction to be reversed. This allows parallel flow and counterflow operation. The temperature sensors for measuring the inlet and outlet temperature are located at the supply connections on the WL 110.

During experiments, temperature curves are plotted and displayed graphically. Additionally, the measured values can be recorded and processed using data acquisition software. The mean heat transfer coefficient is then calculated as a characteristic variable.

The well-structured instructional material sets out the fundamentals and provides a step-by-step guide through the experiments.

Learning Objectives / Experiments

in conjunction with WL 110 supply unit
- function and behaviour during operation of a plate heat exchanger
- plotting temperature curves
  * in parallel flow operation
  * in counterflow operation
- calculation of mean heat transfer coefficient
- comparison with other heat exchanger types

WL 110.02 *Plate Heat Exchanger*

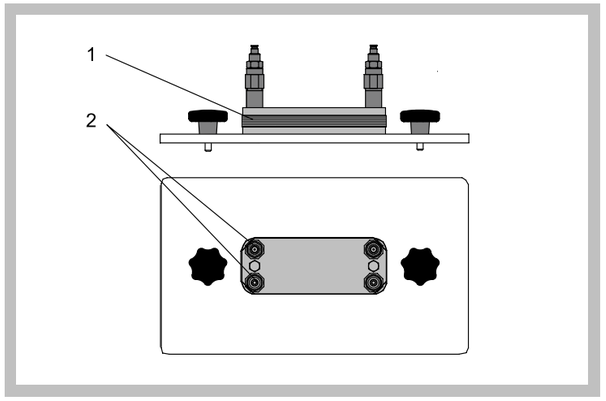

1 plates, 2 water connections

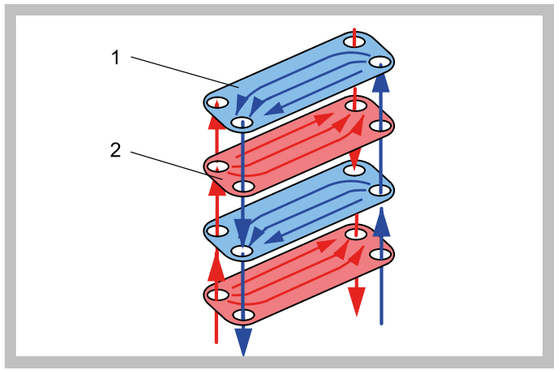

1 plate with cold water, 2 plate with hot water;
red: hot water, blue: cold water

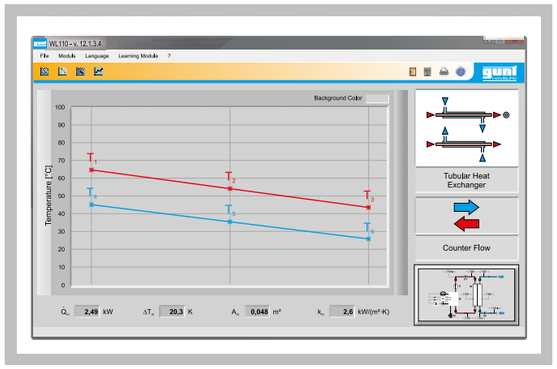

Software screenshot: temperature curve in counterflow operation

Specification

[1] plate heat exchanger for connection to WL 110
[2] hot and cold water supply from WL 110
[3] parallel flow and counterflow operation possible
[4] six soldered plates
[5] recording of temperature using WL 110

Technical Data

6 plates, stainless steel
Heat transfer area: 480cm²

Dimensions and Weight

LxWxH: 400x230x85mm
Weight: approx. 3kg

Scope of Delivery

1 plate heat exchanger
1 set of instructional material

Order Details

060.11002 WL 110.02 Plate Heat Exchanger

WL 110.03 Shell & Tube Heat Exchanger

*** Shell and tube heat exchanger for connection to WL 110 supply unit**

*** Media flowing in cross flow**

Technical Description

Shell and tube heat exchangers are in widespread use. The main advantages of this design are the large heat transfer area and the compact design. Shell and tube heat exchangers are used in the chemical and pharmaceutical industries, in refineries and in process engineering plants.

The WL 110.03 is part of a series of units enabling experiments to be performed on different heat exchanger types. In conjunction with the WL 110 supply unit, which has a hot and cold water circuit and all of the necessary connections, the experimental unit is ideally suited for investigating the functioning and behaviour of a shell and tube heat exchanger in operation.

The WL 110.03 is connected to the WL 110 using quick-release couplings. The shell and tube heat exchanger consists of seven tubes, surrounded by a transparent outer shell. The hot water flows through the tube space and the cold water through the space in the shell. Part of the thermal energy of the hot water is transferred to the cold water. Baffle plates are used to deflect the flow in the shell in such a way as to create greater turbulence and thus a more intensive transfer of heat. The media flows continuously in a crossflow. Valves on the supply unit are used to adjust the flow rates of hot and cold water. The supply hose can be reconnected using quick-release couplings, allowing the flow direction to be reversed. This allows cross parallel flow and cross counterflow operation. Temperature sensors for measuring the inlet and outlet temperature are located at the supply connections on the WL 110.

During experiments, temperature curves are plotted and displayed graphically. Additionally, the measured values can be recorded and processed using data acquisition software. The mean heat transfer coefficient is then calculated as a characteristic variable.

The well-structured instructional material sets out the fundamentals and provides a step-by-step guide through the experiments.

Learning Objectives / Experiments

in conjunction with WL 110 supply unit
- function and behaviour during operation of shell and tube heat exchanger
- plotting temperature curves
  * in cross parallel flow operation
  * in cross counterflow operation
- calculation of mean heat transfer coefficient
- comparison with other heat exchanger types

WL 110.03 Shell & Tube Heat Exchanger

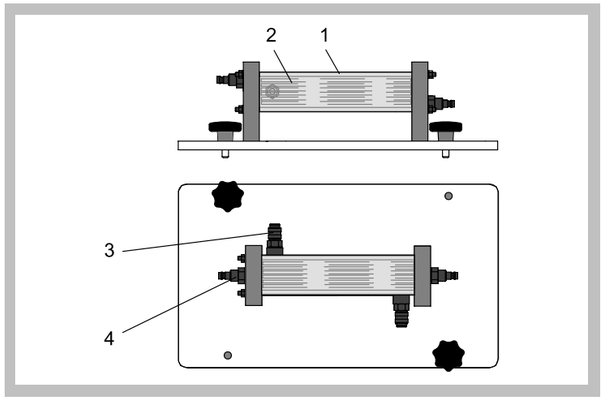

1 transparent shell, 2 tube bundle, 3 shell water connection, 4 tube bundle water connection

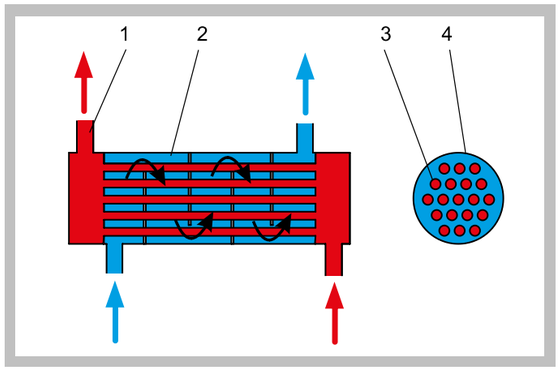

1 hot water, 2 cold water, 3 tube, 4 shell
red: hot water, blue: cold water

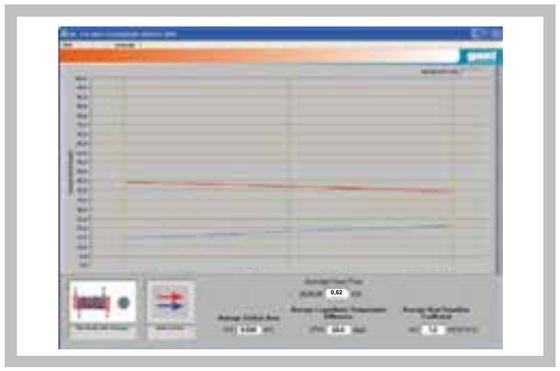

Software screenshot: temperature curve in cross parallel flow operation

Specification

[1] shell and tube heat exchanger (cross flow) for connection to WL 110
[2] hot and cold water supply from WL 110
[3] cross parallel flow and cross counterflow operation possible
[4] transparent shell, visible tube bundle
[5] tube bundle consisting of 7 tubes and 4 baffle plates
[6] recording of temperature using WL 110

Technical Data

Heat transfer area: 200cm²
Tube bundle, stainless steel
- outer diameter: 6mm
- wall thickness: 1mm

Shell, transparent (PMMA)
- outer diameter: 50mm
- wall thickness: 3mm

Dimensions and Weight

LxWxH: 400x230x110mm
Weight: approx. 3kg

Scope of Delivery

1 shell and tube heat exchanger
1 set of instructional material

Order Details

060.11003 WL 110.03 Shell & Tube Heat Exchanger

2E a division of G.U.N.T Gerätebau GmbH, P.O.Box 1125, D-22885 Barsbüttel, t +49 (40)67 08 54-0, f +49 (40)67 08 54-42, E-mail sales@gunt.de
We reserve the right to modify our products without any notifications. **Visit our Websites: www.gunt.de | www.gunt2e.de**

WL 110.04 Jacketed Vessel with Stirrer & Coil

*** Jacketed vessel with stirrer and coil for connection to WL 110 supply unit**

*** Stirrer for improved mixing of medium**

*** Heating using jacket or coiled tube**

Technical Description

In many engineering processes, several basic operations are combined. For example, in a tank a chemical reaction takes place during which heat is to be supplied or removed. Such tanks are equipped with jacket or a coiled tube. Depending on the process, the medium in the jacket or in the coiled tubing is used for heating or cooling of the tank content. For a better mixing of the tank content and an even temperature distribution stirring maschines are used. The product temperature at an even temperature distribution is precisely adjustable. Considered here, the jacketed heat exchanger is a model for such tanks.

The WL 110.04 is part of a series of units enabling experiments to be performed on different heat exchanger types. In conjunction with the WL 110 supply unit, which has a hot and cold water circuit and all of the necessary connections, the experimental unit is ideally suited for investigating the functioning and behaviour of a jacketed heat exchanger in operation.

The WL 110.04 is connected to the WL 110 using quick-release couplings. The jacketed heat exchanger consists of a tank surrounded by a jacket. The tank is fitted with a coiled tube. In heating mode with jacket the hot water flows through the jacket and transfers a part of the thermal energy to the cold water in the tank. In heating mode with coiled tube the hot water flows through the coil and heats the cold water in the tank. A stirring machine can be used in all modes. Valves on the supply unit are used to adjust the flow rate of hot water. The temperature sensors for measuring the inlet and outlet temperature are located at the supply connections on the WL 110. An additional temperature sensor measures the temperature in the tank.

During experiments, time curves are plotted and displayed graphically. Aditionally, the measured values can be recorded and processed using data acquisition software.

The well-structured instructional material sets out the fundamentals and provides a step-by-step guide through the experiments.

Learning Objectives / Experiments

in conjunction with WL 110 supply unit
- function and behaviour during operation of a jacketed heat exchanger
- plotting time curves
  * heating mode with jacket
  * heating mode with coiled tube
- influence of a stirring machine
- comparison with other heat exchanger types

WL 110.04 Jacketed Vessel with Stirrer & Coil

1 stirring machine, 2 tank, 3 stirring machine connection, 4 temperature sensor connection, 5 water outlet and inlet in tank, 6 coiled tube water connection, 7 jacket water connection, 8 temperature sensor

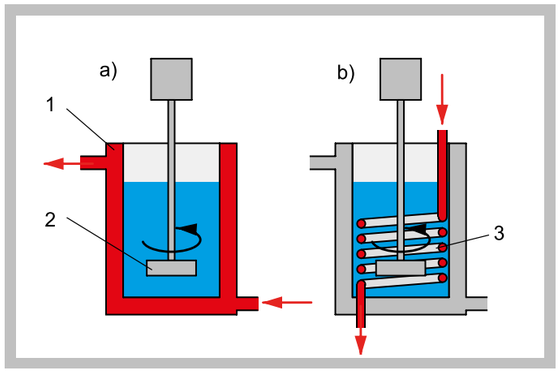

a) heating using jacket: 1 jacket, 2 stirrer
b) heating using coiled tube: 3 coiled tube;
red: hot water, blue: cold water

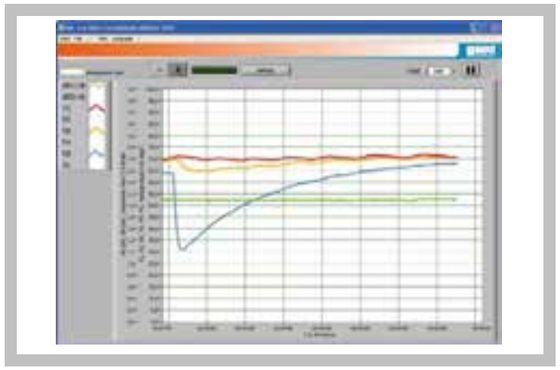

Software screenshot: Time curve for heating using jacket

Specification

[1] jacketed heat exchanger for connection to WL 110
[2] hot and cold water supply from WL 110
[3] heating using jacket or coiled tube
[4] stirring machine can be used in all modes
[5] speed of stirring machine adjustable using WL 110
[6] visible working area due to transparent cover
[7] recording of temperature using WL 110 and additional temperature sensor for measuring temperature in tank

Technical Data

Tank
- nominal value: approx. 1200mL

Stirring machine
- speed: 0...330min^{-1}

Heat transfer area
- jacket (stainless steel): approx. 500cm^2
- coil (stainless steel): approx. 500cm^2

Measuring range
- temperature: 0...100°C

Dimensions and Weight

LxWxH: 400x230x400mm
Weight: approx. 8kg

Scope of Delivery

1 jacketed vessel with stirrer & coil
1 set of instructional material

Order Details

060.11004 WL 110.04 Jacketed Vessel with Stirrer & Coil

2E a division of G.U.N.T Gerätebau GmbH, P.O.Box 1125, D-22885 Barsbüttel, t +49 (40)67 08 54-0, f +49 (40)67 08 54-42, E-mail sales@gunt.de
We reserve the right to modify our products without any notifications. Visit our Websites: www.gunt.de | www.gunt2e.de

WL 110.20 *Water Chiller for WL 110*

*** Cold water supply for WL 110**

Technical Description

WL 110.20 is designed for use with the WL 110 supply unit for heat exchangers. The cold water supply allows for reasonable operation at high ambient and water temperatures.

The unit is equipped with an integral refrigeration system, water tank and circulating pump. In the water tank, a pipe coil acts as an evaporator for the refrigeration cycle and cools the water.

An electronic controller keeps the water temperature constant.

Scope of Delivery

1 water chiller
1 set of hoses
1 manual

Specification

[1] water chiller
[2] main components: refrigeration unit to chill water, water tank, circulating pump
[3] electronic controller for water temperature
[4] connection to WL 110 using hoses with rapid action couplings
[5] refrigerant R134a, environmentally friendly

Technical Data

Centrifugal pump
- max. flow rate: 600L/h
- max. head: 30m
- power consumption: 120W

Refrigeration system
- refrigerating capacity: 833W at -10/32°C
- power consumption: 367W

Tank: 15L

Dimensions and Weight

LxWxH: 1000x630x530mm
Weight: approx. 76kg

Required for Operation

230V, 50/60Hz, 1 phase or 120V, 60Hz/CSA, 1 phase

Order Details

060.11020 WL 110.20 Water Chiller for WL 110

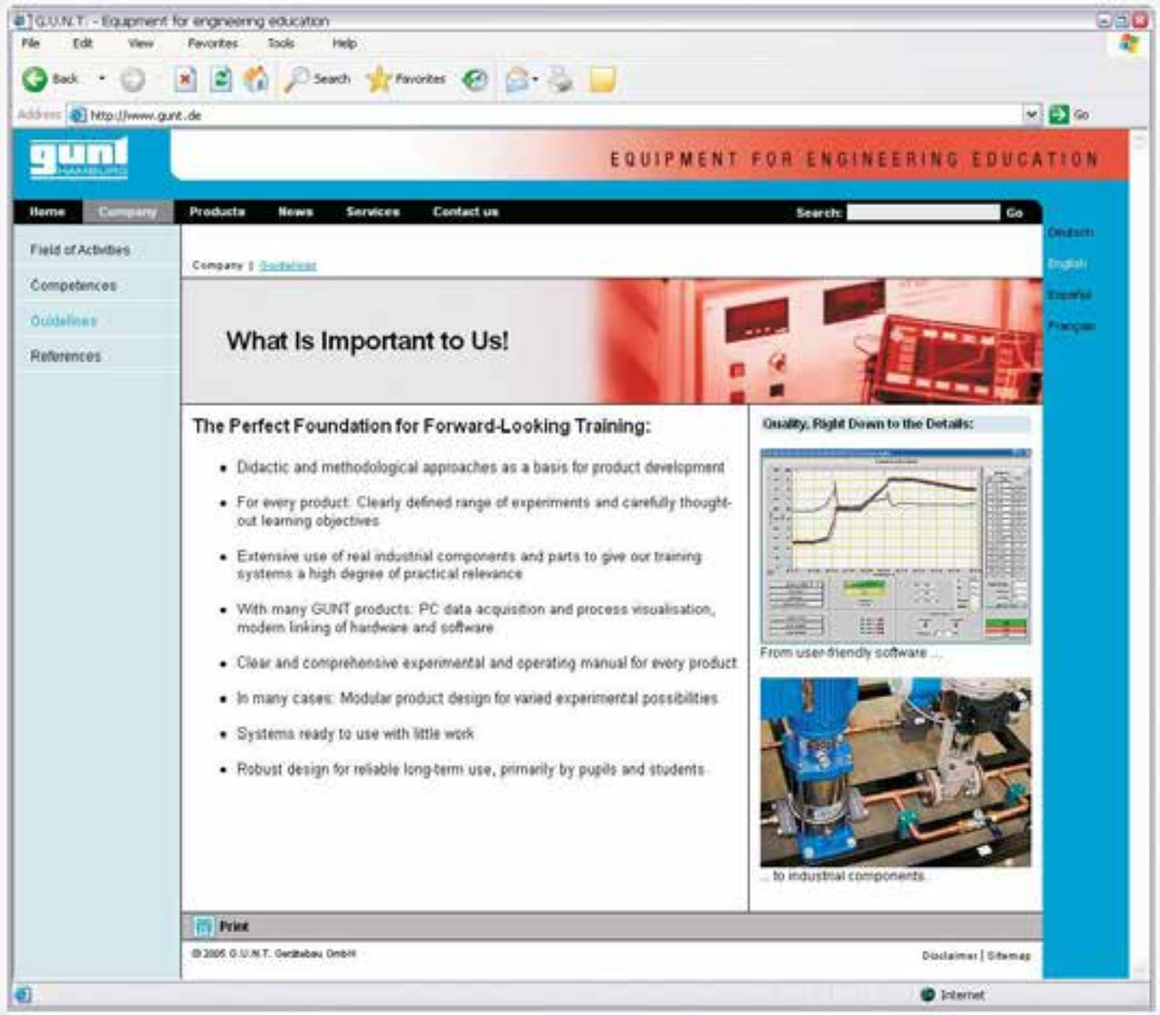

Visit our website, where you will find all you need to know, including all the latest news.

@ www.gunt.de

WL 225 Heat Transfer in the Fluidised Bed

*** Fluidised bed formation with air in a glass reactor**

*** Illuminated glass reactor for optimal observation of the fluidisation process**

Technical Description

Fluidised beds are used in a broad range of applications, e.g. for industrial drying, fluidised bed combustion or heat treatment of materials. Bulk solids are transformed from a fixed bed into a fluidised bed when fluids pass through them. In terms of fluid mechanical and thermodynamic properties, the fluidised bed behaves like an incompressible fluid.

The heat transfer between hot fluid and a fixed bed occurs mainly through heat conduction. Due to the movement of the particles, the fluid and the particles are very well mixed in the fluidised bed. This enables optimum heat transfer between fluid and particles and ensures an even temperature distribution in the reactor.

The core element in WL 225 is a backlit glass reactor which enables students to observe the fluidisation process. Compressed air flows upwards through a porous sintered-metal plate. On the sintered-metal plate is a fixed bed. If the velocity of the air is less than the so-called fluidisation velocity, the flow merely passes through the fixed bed. At higher velocities the bed is loosened to such an extent that individual solid particles are suspended by the fluid and form a fluidised bed. The air escapes through a filter at the top end of the glass reactor.

The air flow rate is set via a valve and measured with a flow meter. The pressure at the inlet into the reactor and in the fluidised bed is also measured.

A submersible heating element in the reactor enables examination of the heat transfer in the fluidised bed. Temperatures are measured by sensors at the air inlet of the reactor, on the surface of the heating element and in the fluidised bed and digitally displayed. The power output of the heating element is also digitally displayed. Aluminium oxide in various particle sizes is included in the scope of delivery as bulk solid.

The well-structured instructional material sets out the fundamentals and provides a step-by-step guide through the experiments.

Learning Objectives / Experiments

- basic information on the fluidisation of fixed beds
- pressure curve within the bed
- pressure losses depending on
  * flow velocity
  * particle size of the bulk solid
- determination of the fluidisation velocity
- separation of mixtures with different particle sizes by sedimentation

- heat transfer in the fluidised bed
  * influence of the air flow rate on the heat transfer
  * influence of the heater position
  * influence of the particle size
  * determination of the heat transfer coefficient

WL 225 Heat Transfer in the Fluidised Bed

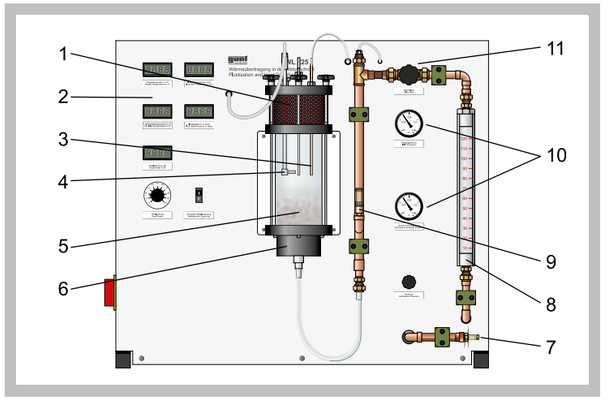

1 air filter, 2 display and control panel, 3 fluidised bed pressure sensor, 4 heater element, 5 reactor with fluidised bed, 6 reactor base made of sintered metal, with distribution chamber, 7 compressed air connection, 8 flow meter, 9 safety valve, 10 manometer, 11 valve for adjusting the air flow rate

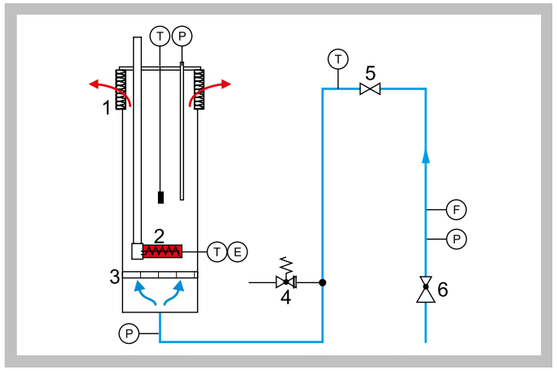

Process schematic: 1 air filter, 2 heating element, 3 sintered-metal plate, 4 safety valve, 5 valve for adjusting the air flow rate, 6 pressure reducing valve, E power output, F flow rate, T temperature

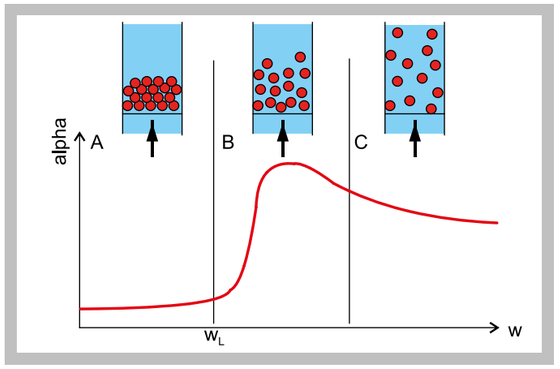

Dependency of the heat transfer coefficient alpha on the flow velocity w:
A fixed bed, B fluidised bed, C sediment discharge, w_L fluidisation velocity

Specification

[1] examination of the fluidised bed formation and the heat transfer in the fluidised bed
[2] fluidised bed of compressed air and aluminium oxide, particle sizes either 125µm or 300µm
[3] glass reactor, backlit
[4] glass reactor with sintered-metal plate at the inlet and air filter at the outlet
[5] heating element, submersible and with adjustable power output
[6] manual setting of the air flow rate via valve and flow meter
[7] instrumentation: temperature sensors at heater, air inlet, in fluidised bed, pressure measurement upstream of the reactor and in the reactor (manometer, pressure sensor), flow meter for measuring the air flow rate, power output of the heating element
[8] digital displays for temperatures, power output, pressure in the fluidised bed
[9] steel rulers for measuring the immersion depth of the heating element and the height of the fluidised bed
[10] safety valve, temperature switch at the heater, air filter at the outlet

Technical Data

Glass reactor
- capacity: 2150mL
- filling volume: approx. 1000mL
- operating pressure: 500mbar

Heating element
- power: 0...100W

Measuring ranges
- temperature: 1x 0...100°C, 2x 0...400°C
- flow rate: 10...124 NL/min
- pressure: 2x 0...0...1600mbar
- power: 0...200W

Dimensions and Weight

LxWxH: 900x460x830mm
Weight: approx. 75kg

Required for Operation

230V, 50/60Hz, 1 phase or 120V, 60Hz/CSA, 1 phase
Compressed air connection: min. 2bar

Scope of Delivery

1 experimental unit
2x 125µm aluminium oxide
2x 300µm aluminium oxide
1 steel ruler
1 compressed air hose
1 set of instructional material

Order Details

060.22500 WL 225 Heat Transfer in the Fluidised Bed

G.U.N.T Gerätebau GmbH, Hanskampring 15-17, D-22885 Barsbüttel, Phone +49 (40) 67 08 54-0, Fax +49 (40) 67 08 54-42, E-mail sales@gunt.de, Web http://www.gunt.de
We reserve the right to modify our products without any notifications.

WL 320 WET COOLING TOWER

The interchangeable cooling columns for wet cooling tower WL 320 enable comparative investigations as well as experiments for teaching the fundamentals. In this way, the main properties of the wet cooling tower can be learned by experiments.

Cooling Column, Type 1, medium surface area (included in Cooling Tower WL 320)

Cooling Tower WL 320

ADDITIONAL COOLING COLUMNS FOR COMPARATIVE MEASUREMENTS

WL 320.01 Cooling Column, Type 2, small surface area

WL 320.02 Cooling Column, Type 3, large surface area

WL 320.03 Cooling Column, Type 4, without wet deck surface

WL 320.04 Cooling Column, Type 5, variable surface area

Interchangeable cooling columns

Five different cooling columns are available:

- three cooling columns with different surface areas
- one cooling column without a wet deck surface for investigation of heat transfer at free water droplets or for wet deck surfaces of your own design
- one cooling column with a divided wet deck surface for varying the surface area and the possibility of measuring temperature and humidity inside the cooling column

How does a cooling tower work?

Cooling towers are used to dissipate the waste heat produced in thermal processes such as steam power plants, air conditioning systems and process coolers. A distinction is made between wet and dry cooling towers. For equal cooling capacities the wet cooling tower allows for a simpler and smaller design at the expense of a water loss (1…2,5%).

WL 320 is a wet cooling tower. The water is cooled by direct contact with the air. The warm water is sprayed into the top of the cooling tower, is cooled by running down the wet deck surfaces and is drawn out at the base. The air enters the cooling tower from below, rises in counterflow to the water and leaves at the top.

A distinction is made between cooling towers with natural and forced draught. Large cooling towers use the natural draught principle. In this case the flow of air is caused by the difference in density of the air inside and outside the cooling tower. For small cooling towers the difference in density is too small to cause sufficient flow of air. Forced draught has to be applied.

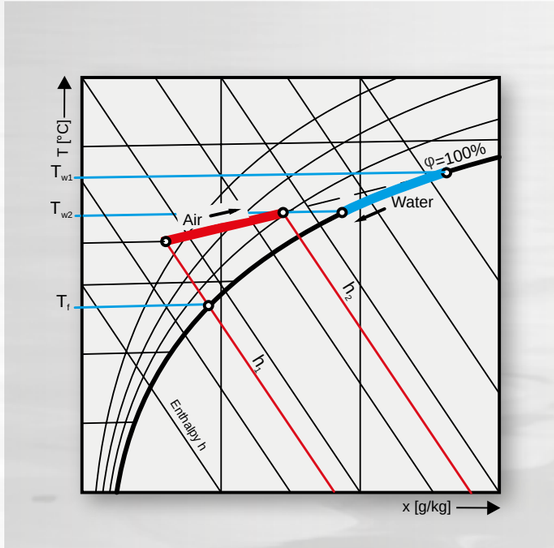

Mollier h-x diagram for humid air: change of state of the air in the cooling tower

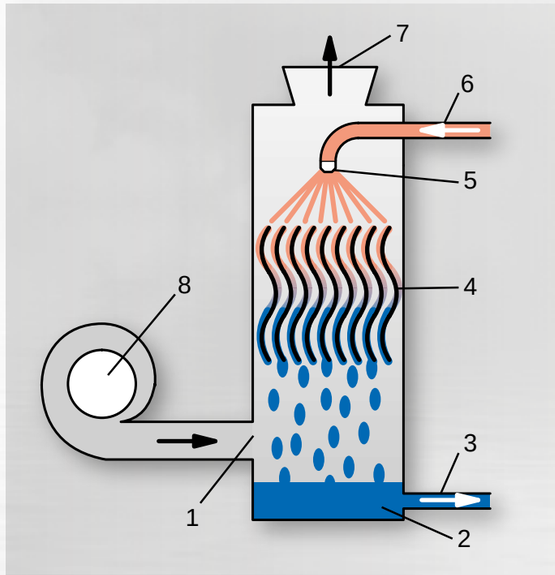

*Principle of a wet cooling tower with forced draught: **1** air inlet, **2** collector tank, **3** cold water outlet, **4** wet deck surface, **5** sprinkler for water distribution, **6** warm water inlet, **7** air outlet, **8** fan*

Two different kinds of heat transfer occur inside the wet cooling tower. Firstly, heat is transferred directly from water to air by convection. Secondly, the water is cooled due to partial evaporation. For the evaporation process to function efficiently, the air must not be too humid. For this reason water outlet temperature T_{w2} has to be significantly higher than saturation temperature of the air (wet-bulb temperature T_f).

WL 320 Wet Cooling Tower

*** Principle and characteristic variables of a wet cooling tower with forced ventilation**

*** Transparent, easily interchangeable cooling column with wet deck surface**

*** 4 additional cooling columns available as accessory**

Technical Description

Wet cooling towers are a proven method of closed-circuit cooling and heat dissipation. Typical areas of application are: air conditioning, heavy industry and power stations.

In wet cooling towers the water to be cooled is sprayed over a wet deck surface. Water and air come into direct contact in the counterflow. The water is cooled by convection. Some of the water evaporates and the evaporation heat removed further cools down the water.

WL 320 examines the main components and principle of a wet cooling tower with forced ventilation. Water is heated in a tank and transported by a pump to an atomiser. The atomiser sprays the water to be cooled over the wet deck surface. The water trickles from the top to the bottom along the wet deck surface whilst air flows from the bottom to the top. The heat is transferred directly from the water to the air by convection and evaporation. The evaporated water volume is recorded. The air flow is generated by a fan and adjusted using a throttle valve.

The cooling column is transparent allowing clear observation of the wet deck surface and the trickling water. Interchangeable cooling columns (WL 320.01 - WL 320.04) enable comparative studies.

All important process parameters are recorded (volumetric air flow rate, temperatures of air and water, air humidity, water flow rate). The measured values can be read on digital displays. At the same time, the measured values can also be transmitted directly to a PC via USB. The data acquisition software is included. The changes of state of the air are represented in an h-x diagram.

The well-structured instructional material sets out the fundamentals and provides a step-by-step guide through the experiments.

Learning Objectives / Experiments

- thermodynamic principles of the wet cooling tower
- changes of state of the air in the h-x diagram
- determination of the cooling capacity
- energy balances
- calculation of process parameters, such as maximum cooling distance, cooling zone width etc.

in conjunction with the cooling columns
WL 320.01-WL 320.04
- comparison of different wet deck surfaces

WL 320 Wet Cooling Tower

1 nozzle as atomiser, 2 wet deck surface, 3 displays and controls, 4 air chamber, 5 fan with throttle valve, 6 pump, 7 tank with heating, 8 tank for additional water, 9 combined temperature/humidity sensor

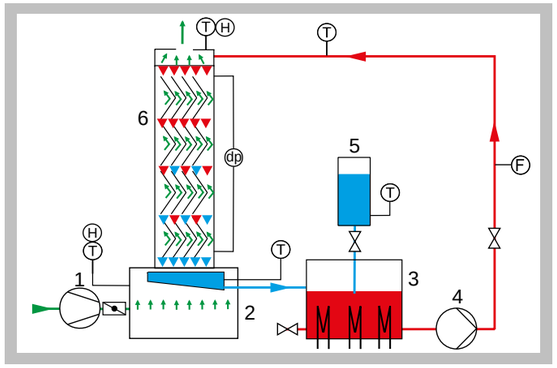

1 fan, 2 air chamber, 3 tank with heater, 4 pump, 5 tank for additional water, 6 cooling column with wet deck surface; T temperature, H humidity, dp differential pressure, F water flow rate

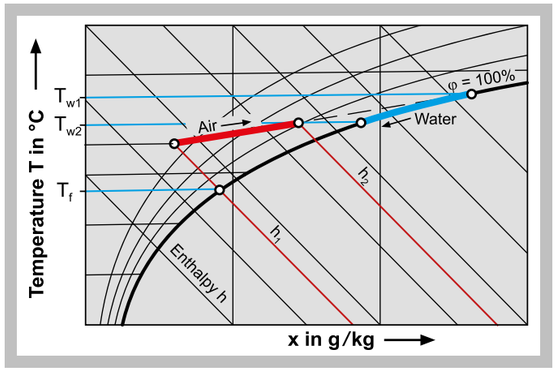

Changes of state of air and water in the h-x diagram as online representation in the software

Specification

[1] principle of a wet cooling tower with cooling column and forced ventilation
[2] interchangeable cooling columns with different wet deck surfaces available as accessories
[3] water circuit with pump, filter, valve and a nozzle as atomiser
[4] three-stage heater with thermostat for water heating
[5] radial fan for forced ventilation
[6] throttle valve to adjust the air flow
[7] demister unit at the outlet of the cooling columns minimises water loss
[8] tank for additional water compensates for water loss
[9] display of temperature, differential pressure, flow rate and humidity
[10] GUNT software for data acquisition via USB under Windows Vista or Windows 7

Technical Data

Cooling column
- specific surface of the wet deck surface: 110m²/m³
- cross-section: 150x150mm

Volumetric air flow measurement via orifice: D=80mm
Heater, adjustable in three stages: 500-1000-1500W
Thermostat: switches off at 50°C
Fan
- power consumption: 250W
- max. differential pressure: 430Pa
- max. flow rate: 13m³/min

Pump
- max. head: 70m
- max. flow rate: 100L/h

Tank for additional water: 4,2L

Measuring ranges
- differential pressure (air): 0...1000Pa
- flow rate (water): 12...360L/h
- temperature: 2x 0...50°C, 3x 0...100°C
- humidity: 10...100% r.h.

Dimensions and Weight

LxWxH: 1110x540x1230mm
Weight: approx. 120kg

Required for Operation

230V, 50/60Hz, 1 phase or 230V, 60Hz/CSA, 3 phases

Scope of Delivery

1 trainer
1 cooling column type 1
1 GUNT software CD + USB cable
1 set of instructional material

Order Details

060.32000 WL 320 Wet Cooling Tower

G.U.N.T Gerätebau GmbH, Hanskampring 15-17, D-22885 Barsbüttel, Phone +49 (40) 67 08 54-0, Fax +49 (40) 67 08 54-42, E-mail sales@gunt.de, Web http://www.gunt.de
We reserve the right to modify our products without any notifications.

HM 150 SERIES A SIMPLE INTRODUCTION INTO THE FUNDAMENTALS OF FLUID MECHANICS

GUNT devices from the HM 150 series demonstrate phenomena and facilitate simple experiments on the following topics of fluid mechanics:

- steady flow in pipes
- laminar/turbulent flow, Reynolds number
- continuity equation, Bernoulli's principle
- methods of flow rate measurement
- flow from tanks
- free/forced vortex formation
- open-channel flow
- flow around bodies
- transient flow at a hydraulic ram
- turbomachines
- jet forces

STEADY FLOW IN PIPES

HM 150.11 ***Losses in a Pipe System***
HM 150.01 ***Pipe Friction for Laminar / Turbulent Flow***
HM 150.29 ***Energy Losses in Piping Elements***

HM 150.11 Losses in a Pipe System

HM 150.18 Osborne Reynolds Experiment

LAMINAR/TURBULENT FLOW, REYNOLDS NUMBER

HM 150.18 ***Osborne Reynolds Experiment***
HM 150.01 ***Pipe Friction for Laminar / Turbulent Flow***

BERNOULLI'S PRINCIPLE / FLOW RATE MEASUREMENT

HM 150.13 ***Methods of Flow Measurement***
HM 150.11 ***Losses in a Pipe System***
HM 150.07 ***Bernoulli's Principle***

HM 150.13 Methods of Flow Measurement

HM 150.15 Hydraulic Ram – Pumping Using Water Hammer

TRANSIENT FLOW

HM 150.15 ***Hydraulic Ram – Pumping Using Water Hammer***

TURBOMACHINES

HM 150.04 ***Centrifugal Pump***
HM 150.16 ***Series and Parallel Configuration of Pumps***
HM 150.19 ***Operating Principle of a Pelton Turbine***
HM 150.20 ***Operating Principle of a Francis Turbine***

HM 150.04 Centrifugal Pump

HM 150.08 Measurement of Jet Forces

JET FORCES

HM 150.08 ***Measurement of Jet Forces***

DETERMINING THE METACENTRE

HM 150.06 ***Stability of Floating Bodies***

HM 150.06 Stability of Floating Bodies

HM 150.21 Visualisation of Streamlines in an Open Channel

STEADY OPEN-CHANNEL FLOW

HM 150.21 ***Visualisation of Streamlines in an Open Channel***
HM 150.03 ***Plate Weirs for HM 150***

The HM 150 base module provides a closed water circuit to supply the separate experimental units. The experimental unit is connected to the base module for the water supply via a hose. The flow rate is measured volumetrically.

All devices are designed so that they can be placed securely and stably on the base module.

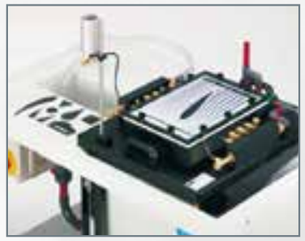
HM 150.10 Visualisation of Streamlines

FLOW AROUND BODIES

HM 150.10 ***Visualisation of Streamlines***
HM 150.21 ***Visualisation of Streamlines in an Open Channel***

HM 150.09 Horizontal Flow from a Tank

FLOW FROM TANKS

HM 150.09 ***Horizontal Flow from a Tank***
HM 150.12 ***Vertical Flow from a Tank***

FREE/FORCED VORTEX FORMATION

HM 150.14 ***Vortex Formation***

HM 150.14 Vortex Formation

HM 150.18 Osborne Reynolds Experiment

Technical Description

The Osborne Reynolds experiment is used to display laminar and turbulent flows. During the experiment it is possible to observe the transition from laminar to turbulent flow after a limiting velocity. The Reynolds number is used to assess whether a flow is laminar or turbulent.

With HM 150.18 the streamlines during laminar or turbulent flow are displayed in colour with the aid of an injected contrast medium (ink). The experimental results can be used to determine the critical Reynolds number.

The experimental unit consists of a transparent pipe section through which water flows, with flow-optimised inlet. A valve can be used to adjust the flow rate in the pipe section. Ink is injected into the flowing water. A layer of glass beads in the water tank ensures an even and low-turbulence flow.

The experimental unit is positioned easily and securely on the work surface of the HM 150 base module. The water is supplied and the flow rate measured by HM 150. Alternatively, the experimental unit can be operated by the laboratory supply.

The well-structured instructional material sets out the fundamentals and provides a step-by-step guide through the experiments.

Learning Objectives / Experiments

- visualisation of laminar flow
- visualisation of the transition zone
- visualisation of turbulent flow
- determination of the critical Reynolds number

*** Visualisation of laminar and turbulent flow**

*** Determining the critical Reynolds number**

*** Traditional experiment based on the model of the British physicist Osborne Reynolds**

HM 150.18 Osborne Reynolds Experiment

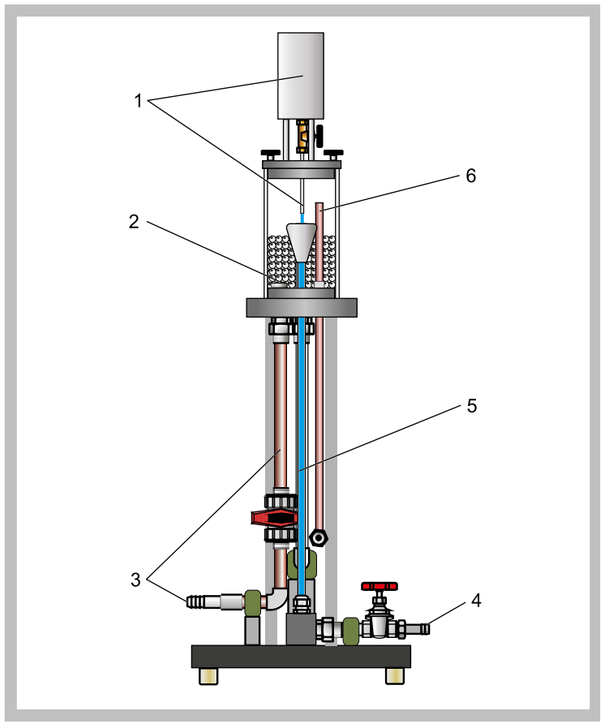

1 tank for ink with inlet pipe, 2 overflow, 3 water supply, 4 water drain, 5 pipe section with valve, 6 water tank with glass beads

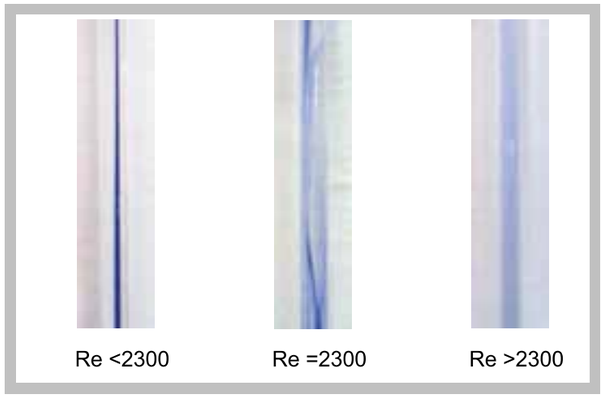

Flow conditions from left to right: laminar flow, transition from laminar to turbulent flow, turbulent flow

Specification

[1] visualisation of laminar and turbulent flow in the Osborne Reynolds experiment
[2] water as flowing medium and ink as contrast medium
[3] vertical glass pipe section
[4] water tank with glass beads to stabilise the flow
[5] flow rate in the pipe section can be adjusted via a valve
[6] flow rate determined by HM 150 base module
[7] water supply using HM 150 base module or via laboratory supply

Technical Data

Water tank
- capacity: 2200mL

Pipe section
- length: 675mm
- inside diameter: 10mm

Tank for ink
- capacity: approx. 250mL

Dimensions and Weight

LxWxH: 400x400x1140mm
Empty weight: approx. 16kg

Required for Operation

HM 150 (closed water circuit) or alternatively water connection and drain

Scope of Delivery

1 experimental unit
1 bag of glass beads
1L ink
1 set of instructional material

Order Details

070.15018 HM 150.18 Osborne Reynolds Experiment

G.U.N.T Gerätebau GmbH, Hanskampring 15-17, D-22885 Barsbüttel, Phone +49 (40) 67 08 54-0, Fax +49 (40) 67 08 54-42, E-mail sales@gunt.de, Web http://www.gunt.de
We reserve the right to modify our products without any notifications.

HM 150.07 Bernoulli's Principle

*** Investigation and verification of Bernoulli's principle**

*** Static pressures and total pressure distribution along the Venturi nozzle**

*** Determination of the flow coefficient at different flow rates**

Learning Objectives / Experiments

- energy conversion in divergent/convergent pipe flow
- recording the pressure curve in a Venturi nozzle
- recording the velocity curve in a Venturi nozzle
- determining the flow coefficient
- recognising friction effects

Technical Description

Bernoulli's principle describes the relationship between the flow velocity of a fluid and its pressure. An increase in velocity leads to a reduction in pressure in a flowing fluid, and vice versa. The total pressure of the fluid remains constant. Bernoulli's equation is also known as the principle of conservation of energy of the flow.

The HM 150.07 experimental unit is used to demonstrate Bernoulli's principle by determining the pressures in a Venturi nozzle.

The experimental unit includes a pipe section with a transparent Venturi nozzle and a movable Pitot tube for measuring the total pressure. The Pitot tube is located within the Venturi nozzle, where it is displaced axially. The position of the Pitot tube can be observed through the Venturi nozzle's transparent front panel.

The Venturi nozzle is equipped with pressure measuring points to determine the static pressures. The pressures are displayed on the six tube manometers. The total pressure is measured by the Pitot tube and displayed on another single tube manometer.

The experimental unit is positioned easily and securely on the work surface of the HM 150 base module. The water is supplied and the flow rate measured by HM 150. Alternatively, the experimental unit can be operated by the laboratory supply.

The well-structured instructional material sets out the fundamentals and provides a step-by-step guide through the experiments.

HM 150.07 Bernoulli's Principle

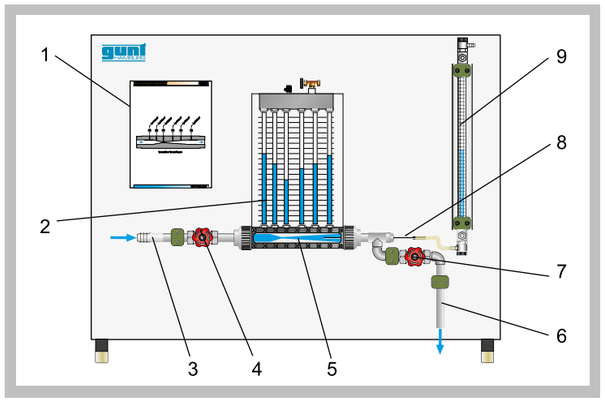

1 diagram, 2 tube manometers (static pressures), 3 water supply, 4 valve, 5 Venturi nozzle, 6 water outlet, 7 valve for water outlet, 8 Pitot tube, 9 single tube manometer (total pressure)

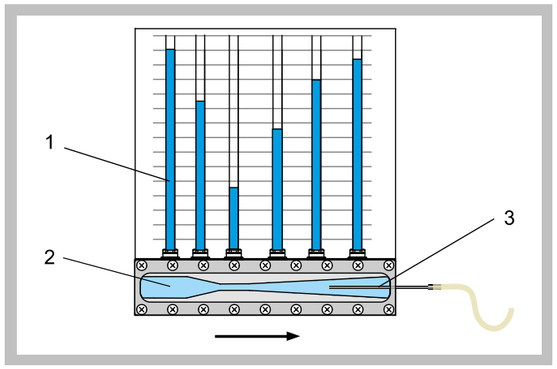

Measuring the pressures in a Venturi nozzle
1 tube manometers for displaying the static pressures, 2 Venturi nozzle with measuring points, 3 Pitot tube for measuring the total pressure, axially movable

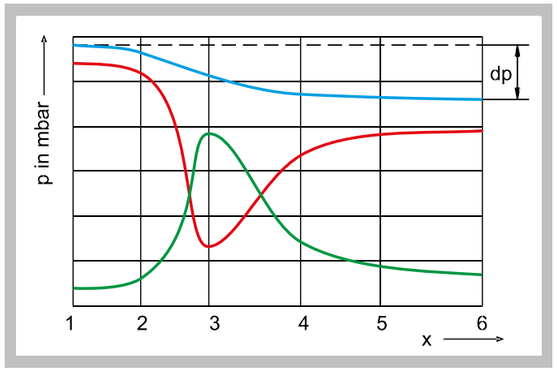

Pressure curve in the Venturi nozzle: blue: total pressure, red: static pressure, green: dynamic pressure; x pressure measuring points, p pressure

Specification

[1] learning Bernoulli's principle
[2] Venturi nozzle with transparent front panel and measuring points for measuring the static pressures
[3] axially movable Pitot tube for determining the total pressure at various points within the Venturi nozzle
[4] 6 tube manometers for displaying the static pressures
[5] single tube manometer for displaying the total pressure
[6] flow rate determined by HM 150 base module
[7] water supply using HM 150 base module or via laboratory supply

Technical Data

Venturi nozzle
- A: 84...338mm²
- angle at the inlet: 10,5°
- angle at the outlet: 4°

Pitot tube
- movable range: 0...200mm
- diameter: 4mm

Pipes and pipe connectors: PVC

Measuring ranges
- static pressure: 0...290mmWC
- total pressure: 0...370mmWC

Dimensions and Weight

LxWxH: 1100x680x900mm
Weight: approx. 28kg

Required for Operation

HM 150 (closed water circuit) or alternatively water connection and drain

Scope of Delivery

1 experimental unit
1 set of instructional material

Order Details

070.15007 HM 150.07 Bernoulli's Principle

G.U.N.T Gerätebau GmbH, Hanskampring 15-17, D-22885 Barsbüttel, Phone +49 (40) 67 08 54-0, Fax +49 (40) 67 08 54-42, E-mail sales@gunt.de, Web http://www.gunt.de
We reserve the right to modify our products without any notifications.

HM 150.01 Pipe Friction for Laminar / Turbulent Flow

*** Pipe friction losses in laminar and turbulent flow**

*** Determining the critical Reynolds number**

Technical Description

During flow through pipes, pressure losses occur due to internal friction and friction between the fluid and the wall. When calculating pressure losses, we need to know the friction factor, a dimensionless number. The friction factor is determined with the aid of the Reynolds number, which describes the ratio of inertia forces to friction forces.

HM 150.01 enables the study of the relationship between pressure loss due to fluid friction and velocity in the pipe flow. Additionally, the pipe friction factor is determined.

The experimental unit includes a small diameter pipe section in which the laminar and turbulent flow is generated. The Reynolds number and the pipe friction factor are determined from the flow rate and pressure loss. In turbulent flow, the pipe is supplied directly from the water supply. The constant pressure at the water supply required for laminar flow is provided by a standpipe on the overflow. Valves can be used to adjust the flow rate.

The pressures in laminar flow are measured with twin tube manometers. In turbulent flow, the pressure is read on a dial-gauge manometer.

The experimental unit is positioned easily and securely on the work surface of the HM 150 base module. The water is supplied and the flow rate measured by HM 150. Alternatively, the experimental unit can be operated by the laboratory supply.

The well-structured instructional material sets out the fundamentals and provides a step-by-step guide through the experiments.

Learning Objectives / Experiments

- measurements of the pressure loss in laminar flow
- measurements of the pressure loss in turbulent flow
- determining the critical Reynolds number
- determining the pipe friction factor
- comparing the actual pipe friction factor with the theoretical friction factor

HM 150.01 Pipe Friction for Laminar / Turbulent Flow

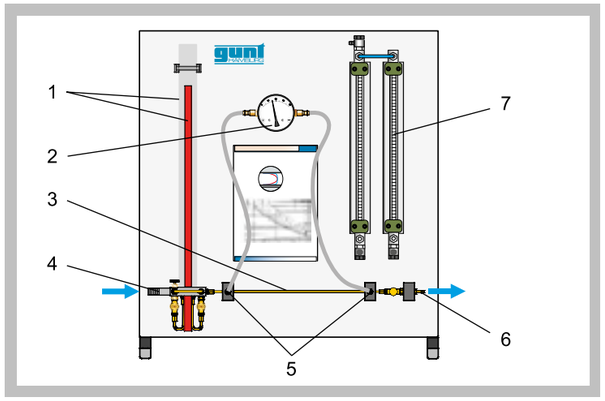

1 tank with overflow, 2 dial-gauge manometer, 3 pipe section, 4 water supply, 5 pressure measuring points, 6 water drain, 7 twin tube manometers

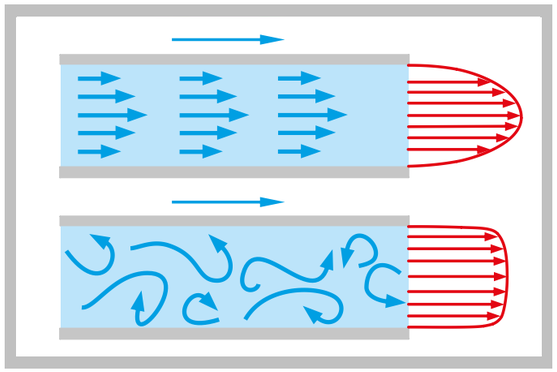

Representation of the laminar and turbulent flow in the pipe
top: laminar flow; bottom: turbulent flow; blue flow, red velocity profile

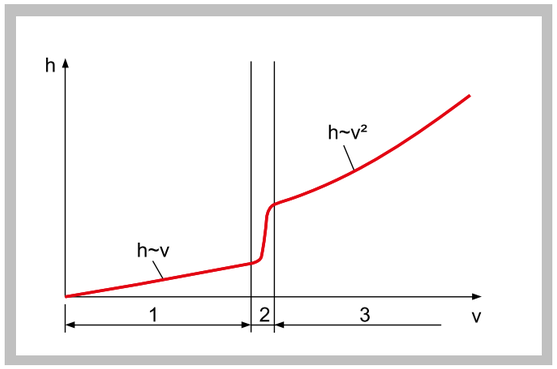

Pressure losses as a function of velocity in pipe flow
1 laminar flow, 2 transition from laminar to turbulent, 3 turbulent flow;
h pressure loss, v velocity

Specification

[1] investigation of the pipe friction in laminar or turbulent flow
[2] transparent tank with overflow ensures constant water inlet pressure in the pipe section for experiments with laminar flow
[3] water supply via HM 150 or via laboratory supply for experiments with turbulent flow
[4] flow rate adjustment via valves
[5] twin tube manometer for measurements in laminar flow
[6] dial-gauge manometer for measurements in turbulent flow
[7] flow rate determined by HM 150 base module
[8] water supply using HM 150 base module or via laboratory supply

Technical Data

Pipe section
- length: 400mm
- inside diameter: 3mm

Tank: 5L

Measuring ranges
- differential pressure (twin tube manometer): 2x 370mmWC
- differential pressure (dial-gauge manometer): 0...0,4bar

Dimensions and Weight

LxWxH: 850x680x930mm
Weight: approx. 23kg

Required for Operation

HM 150 (closed water circuit) or water supply, drain

Scope of Delivery

1 experimental unit
1 set of instructional material

Order Details

070.15001 HM 150.01 Pipe Friction for Laminar / Turbulent Flow

G.U.N.T Gerätebau GmbH, Hanskampring 15-17, D-22885 Barsbüttel, Phone +49 (40) 67 08 54-0, Fax +49 (40) 67 08 54-42, E-mail sales@gunt.de, Web http://www.gunt.de
We reserve the right to modify our products without any notifications.

HM 150.12 Vertical Flow from a Tank

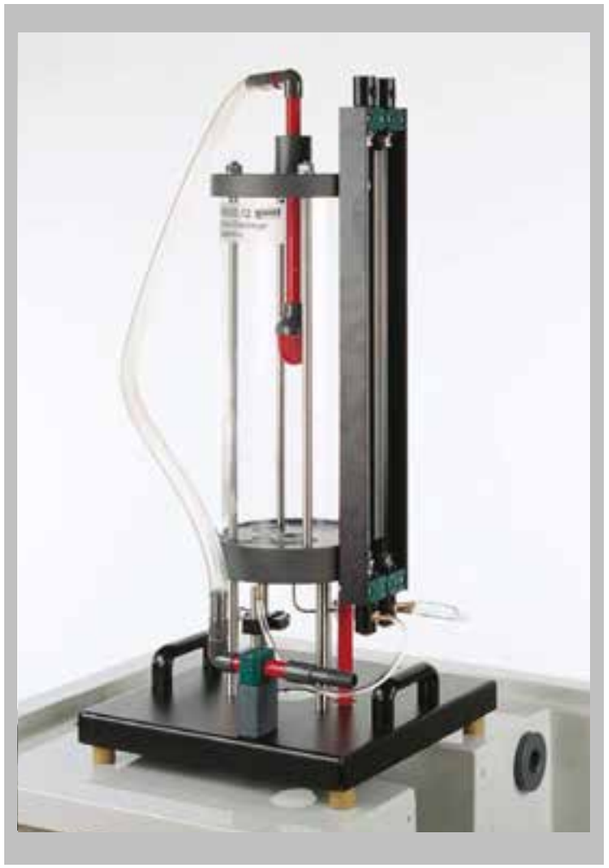

*** Determination of the diameter and velocity of the outlet jet**

*** Study of openings with different inlet and outlet contours**

*** Determining the contraction coefficient**

Technical Description

Pressure losses in the flow from tanks are essentially the result of two processes: the jet deflection upon entry into the opening and the wall friction in the opening. As a result of the pressure losses the real discharge is smaller than the theoretical flow rate.

HM 150.12 determines these losses at different flow rates. Different diameters as well as inlet and outlet contours of the openings can be studied. Additionally, the contraction coefficient can be determined as a characteristic for different contours.

The experimental unit includes a transparent tank, a measuring device as well as a Pitot tube and twin tube manometers. An interchangeable insert is installed in the tank's water outlet to facilitate the investigation of various openings. Five inserts with different diameters, inlet contours and outlet contours are provided along with the unit.

The issued water jet is measured using a measuring device. A Pitot tube detects the total pressure of the flow. The pressure difference (read on the manometer) is used to determine the velocity.

The tank is fitted with an adjustable overflow and a measuring point for static pressure. In this way, the level can be precisely adjusted and read on the manometer. The experimental unit is positioned easily and securely on the work surface of the HM 150 base module. The water is supplied and the flow rate measured by HM 150. Alternatively, the experimental unit can be operated by the laboratory supply.

The well-structured instructional material sets out the fundamentals and provides a step-by-step guide through the experiments.

Learning Objectives / Experiments

- study of the outlet jet (diameter, velocity)
- determination of pressure losses and contraction coefficient for different outlet contours
- determination of flow rate at different discharge heads

HM 150.12 Vertical Flow from a Tank

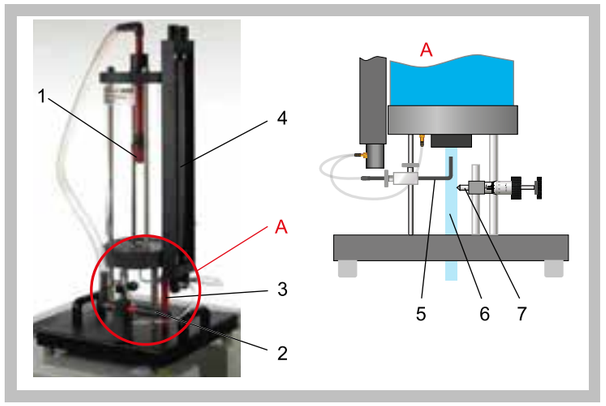

1 inlet strainer, 2 water connection, 3 overflow, 4 twin tube manometers, 5 Pitot tube, 6 water jet, 7 measuring device for jet diameter

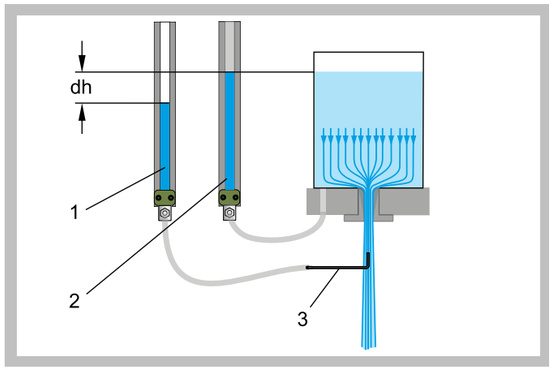

Measuring the pressures
1 total pressure in the free jet, 2 static pressure in the tank, 3 Pitot tube;
dh loss due to conversion of pressure into velocity

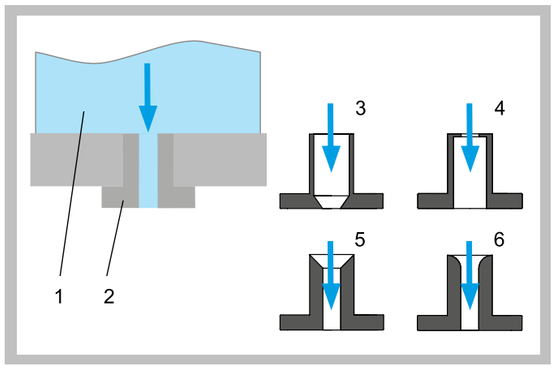

Interchangeable inserts to study different inlet and outlet contours
1 tank, 2 insert with cylindrical hole, 3 insert with conical outlet, 4 insert with orifice plate at the inlet, 5 insert with conical inlet, 6 insert with rounded inlet

Specification

[1] study of pressure losses in vertical flows from tanks
[2] determining the contraction coefficient for different contours and diameters
[3] tank with adjustable overflow
[4] 5 interchangeable inserts with different contours
[5] measuring device for determining the jet diameter
[6] Pitot tube for determining the total pressure
[7] pressure display on twin tube manometers
[8] flow rate determined by HM 150 base module
[9] water supply using HM 150 base module or via laboratory supply

Technical Data

Tank
- capacity: approx. 13L
- overflow height: max. 400mm
- max. flow rate: 14L/min

Inserts
Inside diameters: d_1=inlet, d_2=outlet
- 1x cylindrical hole, d=12mm
- 1x outlet from the insert: cone
  d_1=24mm, d_2=12mm
- 1x inlet to the insert: orifice plate
  d_1=24mm, d_2=12mm
- 1x inlet to the insert: cone
  d_1=30mm, d_2=12mm
- 1x inlet to the insert: rounded, d=12mm

Measuring ranges
- pressure: 500mmWC
- jet radius: 0...10mm

Dimensions and Weight

LxWxH: 400x400x830mm
Weight: approx. 18kg

Required for Operation

HM 150 (closed water circuit) or alternatively water connection and drain

Scope of Delivery

1 experimental unit
5 inserts
1 set of hoses
1 set of instructional material

Order Details

070.15012 HM 150.12 Vertical Flow from a Tank

G.U.N.T Gerätebau GmbH, Hanskampring 15-17, D-22885 Barsbüttel, Phone +49 (40) 67 08 54-0, Fax +49 (40) 67 08 54-42, E-mail sales@gunt.de, Web http://www.gunt.de
We reserve the right to modify our products without any notifications.

HM 150.11 Losses in a Pipe System

*** Pressure losses in the piping system**

*** Pressure measurement without interaction via annular chambers**

*** Transparent measuring objects for determining flow rate**

Technical Description

Pressure losses occur during the flow of real fluids due to friction and turbulence (vortices). Pressure losses in pipes, piping elements, fittings and measuring instruments (e.g. flow meter, velocity meter) cause pressure losses and must therefore be taken into account when designing piping systems.

HM 150.11 allows to study the pressure losses in pipes, piping elements and shut-off devices. In addition, the differential pressure method is presented for measuring the flow rate.

The experimental unit contains six different pipe sections capable of being shut off individually. The pipe sections are equipped with piping elements such as bends, elbows and branches. In one pipe section, different shut-off devices and measuring objects are installed to determine the flow rate. The measuring objects are made of transparent material and provide excellent insight into the inner structure. The pressure measuring points in the piping system are designed as annular chambers. This creates a largely interference-free pressure measurement.

The experiments measure the pressure losses in pipes and piping elements, such as branches and bends. The opening characteristic of the shut-off devices are also recorded. The pressures are measured with tube manometers.

The experimental unit is positioned easily and securely on the work surface of the HM 150 base module. The water is supplied and the flow rate measured by HM 150. Alternatively, the experimental unit can be operated by the laboratory supply.

The well-structured instructional material sets out the fundamentals and provides a step-by-step guide through the experiments.

Learning Objectives / Experiments

- pressure losses in pipes, piping elements and fittings
- how the flow velocity affects the pressure loss
- determining resistance coefficients
- opening characteristics of angle seat valve and gate valve
- familiarisation with various measuring objects for determining flow rate:
  * Venturi nozzle
  * orifice plate flow meter and measuring nozzle

HM 150.11 Losses in a Pipe System

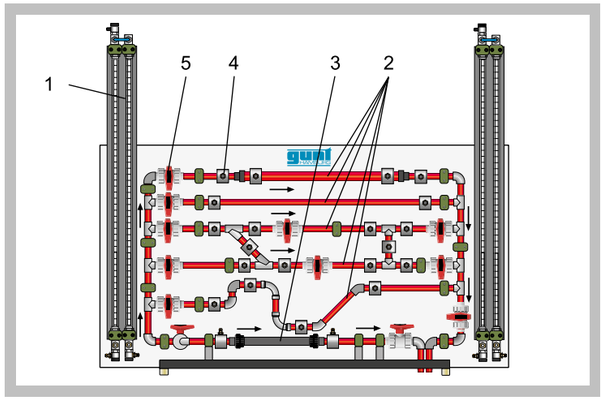

1 tube manometer, 2 various pipe sections, 3 pipe section for interchangeable shut-off/measuring objects, 4 annular chamber, 5 ball valve

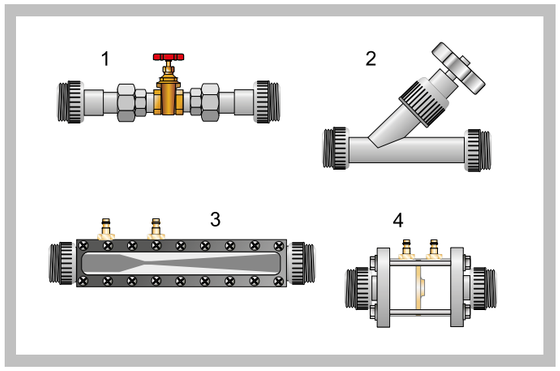

Shut-off devices and measuring objects for determining flow rate
1 gate valve, 2 angle seat valve, 3 Venturi nozzle, 4 orifice plate flow meter or measuring nozzle

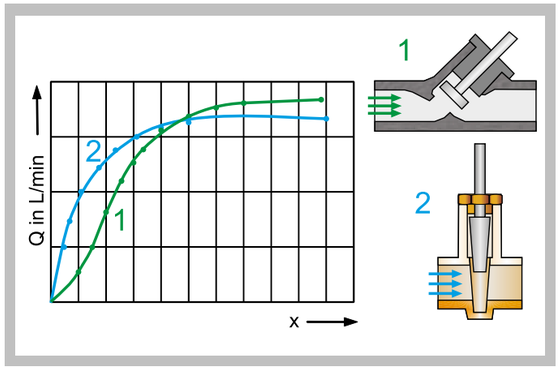

Opening characteristics of shut-off devices; Q flow rate, x opening, blue: angle seat valve, green: gate valve;
1 angle seat valve, 2 gate valve

Specification

[1] investigation of pressure losses in piping elements and shut-off devices
[2] different measuring objects for determining flow rate according to the differential pressure method
[3] six pipe sections capable of being individually shut off, with different piping elements: sudden contraction, sudden enlargement, Y-pieces, T-pieces, corners and bends
[4] one pipe section to hold interchangeable shut-off/measuring objects
[5] measuring objects made of transparent material: Venturi nozzle, orifice plate flow meter and measuring nozzle
[6] shut-off devices: angle seat valve, gate valve
[7] annular chambers allow measurement of pressure without interaction
[8] 2 twin tube manometers for measuring the pressure difference
[9] flow rate determined by HM 150 base module
[10] water supply using HM 150 base module or via laboratory supply

Technical Data

Pipe section to hold fittings or measuring objects
- 20x1,5mm, PVC

Pipe sections
Inside diameter: d
- straight: d=20x1,5mm, length: 800mm, PVC
- sudden contraction: d=32x1,8-20x1,5mm, PVC
- sudden enlargement: d=20x1,5-32x1,8mm, PVC
- with 2x Y-piece 45° and 2x T-piece
- with 2x 90° elbow/bend: d=20x1,5mm, PVC and 2x 45° elbow: d=20x1,5mm, PVC

2x twin tube manometers: 0...1000mmWC

Measuring range
- pressure: 0...0,1bar

Dimensions and Weight

LxWxH: 1550x640x1300mm
Weight: approx. 58kg

Required for Operation

HM 150 (closed water circuit) or water connection and drain

Scope of Delivery

1 experimental unit
2 shut-off devices (angle seat valve, gate valve)
1 Venturi nozzle, 1 orifice plate flow meter or measuring nozzle
1 set of hoses
1 set of tools
1 set of instructional material

Order Details

070.15011 HM 150.11 Losses in a Pipe System

G.U.N.T Gerätebau GmbH, Hanskampring 15-17, D-22885 Barsbüttel, Phone +49 (40) 67 08 54-0, Fax +49 (40) 67 08 54-42, E-mail sales@gunt.de, Web http://www.gunt.de
We reserve the right to modify our products without any notifications.

HM 150 Base Module for Experiments in Fluid Mechanics

*** Water supply for experimental units for fluid mechanics**

*** Volumetric flow rate measurement for large and small flow rates**

*** Comprehensive range of accessories allows a complete course in the fundamentals of fluid mechanics**

Technical Description

The HM 150 series of devices permits a varied experimental cross-section in the fundamentals of fluid mechanics. The base module HM 150 provides the basic equipment for individual experiments: the supply of water in the closed circuit; the determination of volumetric flow rate and the positioning of the experimental unit on the working surface of the base module and the collection of dripping water.

The closed water circuit consists of the underlying storage tank with a powerful submersible pump and the measuring tank arranged above, in which the returning water is collected.

The measuring tank is stepped, for larger and smaller volumetric flow rates. A measuring beaker is used for very small volumetric flow rates. The volumetric flow rates are measured using a stopwatch.

The top work surface enables the various experimental units to be easily and safely positioned. A small flume is integrated in the work surface, in which experiments with weirs (HM 150.03) are conducted.

HM 150 Base Module for Experiments in Fluid Mechanics

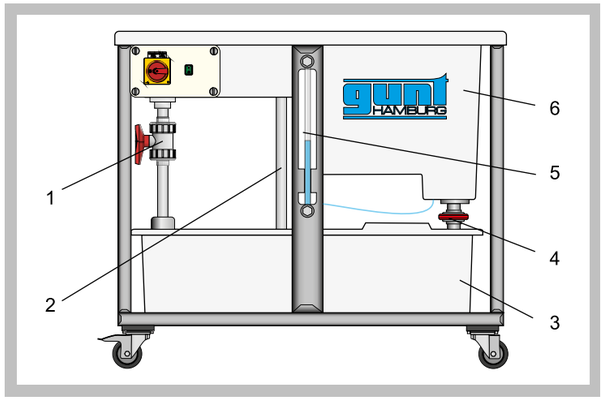

1 flow control valve, 2 overflow, 3 storage tank with submersible pump, 4 gate valve for emptying the measuring tank, 5 measuring tank level indicator, 6 measuring tank

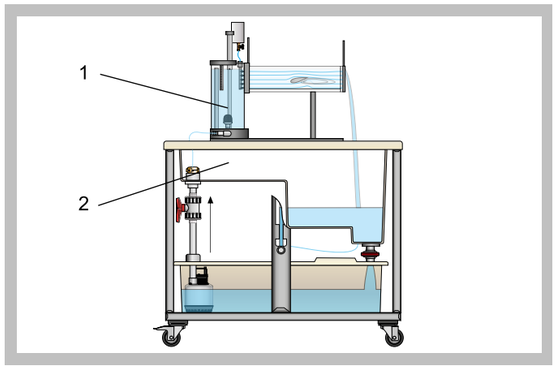

HM 150.21 (1) placed on the base module HM 150 (2)

Base module for experiments in fluid mechanics with plate weir HM 150.03

Specification

[1] base module for supplying experimental units in fluid mechanics
[2] closed water circuit with storage tank, submersible pump and measuring tank
[3] measuring tank divided in two for volumetric flow rate measurements
[4] measuring beaker with scale for very small volumetric flow rates
[5] measurement of volumetric flow rates by using a stopwatch
[6] work surface with integrated flume for experiments with weirs
[7] work surface with inside edge for safe placement of the accessory and for collecting the dripping water
[8] storage tank, measuring tank and work surface made of GRP

Technical Data

Pump
- power consumption: 250W
- max. flow rate: 150L/min
- max. head: 7,6m

Storage tank, capacity: 180L
Measuring tank
- at large volumetric flow rates: 40L
- at small volumetric flow rates: 10L

Flume
- LxWxH: 530x150x180mm

Measuring beaker with scale for very small volumetric flow rates
- capacity: 2L

Stopwatch
- measuring range: 0...9h 59min 59sec

Dimensions and Weight

LxWxH: 1230x770x1070mm
Weight: approx. 82kg

Required for Operation

230V, 50/60Hz, 1 phase or 120V, 60Hz/CSA, 1 phase

Scope of Delivery

1 base module
1 stopwatch
1 measuring beaker
1 hose
1 manual

Order Details

070.15000 HM 150 Base Module for Experiments in Fluid Mechanics

G.U.N.T Gerätebau GmbH, Hanskampring 15-17, D-22885 Barsbüttel, Phone +49 (40) 67 08 54-0, Fax +49 (40) 67 08 54-42, E-mail sales@gunt.de, Web http://www.gunt.de
We reserve the right to modify our products without any notifications.

HM 115 Hydrostatics Trainer

*** Basic experiments in hydrostatics**

*** Wide range of experiments**

*** Closed water circuit with tank and pump**

Technical Description

Hydrostatics is the study of fluids at rest. Phenomena occurring as a result of hydrostatic pressure are analysed and the force effect determined. Hydrostatic aspects play a crucial role in various areas of engineering, such as in plumbing and domestic engineering, in pump manufacturing, in aerospace and in shipping (buoyancy, load on the sides of a ship).

The HM 115 trainer can be used to conduct experiments in the field of hydrostatics, such as ground pressure measurement or demonstrating Boyle's law. Determining the centre of pressure completes the range of experiments. Furthermore, experimental units for studying capillarity and buoyancy are included. The hydrostatic pressure and surface tension are measured. Additionally, one experiment uses a Pitot tube and a tube for static pressure to study the pressure components in a flowing fluid.

To make the functions and processes visible, the tanks and the experimental units use a transparent design. Tanks and pipes are made entirely of plastic.

Various pressure gauges are available for measuring pressure and differential pressure of the liquid fluid, such as a Pitot tube, tube for static pressure a pressure sensor with digital display, twin tube manometers or a differential pressure manometer. A diaphragm manometer and a Bourdon tube manometer indicate the pressure of the gaseous fluid.

The trainer has its own air and water supply. The closed water circuit includes a supply tank with submersible pump. A compressor is included to generate negative pressures for the experiments with air.

The well-structured instructional material sets out the fundamentals and provides a step-by-step guide through the experiments.

Learning Objectives / Experiments

- study of buoyancy on a variety of bodies
- study of the density of liquids
- hydrostatic pressure, Pascal's law
- communicating vessels
- determination of the centre of pressure
- study of surface tensions
- demonstration of capillarity
- Boyle's law
- study of static and dynamic pressure component in flowing fluid
- learning of various methods of pressure measurement

HM 115 Hydrostatics Trainer

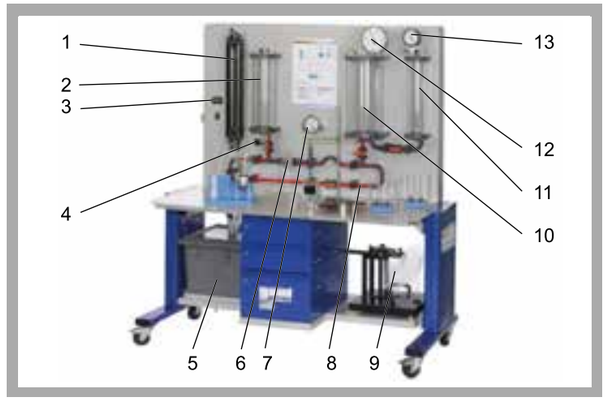

1 twin tube manometers, 2 tank, 3 digital pressure display, 4 pressure sensor, 5 supply tank with submersible pump, 6 Pitot tube and tube for static pressure, 7 differential pressure manometer, 8 pipe section, 9 hydrostatic pressure in liquids, 10 pressure vessel, 11 pressure vessel, 12 Bourdon tube manometer, 13 diaphragm manometer

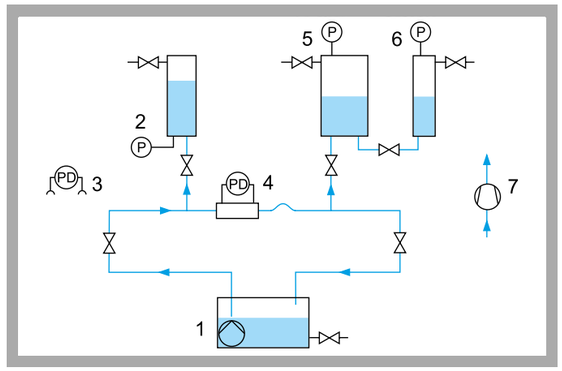

1 supply tank with submersible pump, 2 tank with pressure sensor, 3 twin tube manometers, 4 Pitot tube + tube for static pressure with differential pressure manometer, 5 pressure vessel with Bourdon tube manometer, 6 pressure vessel with diaphragm manometer, 7 compressor; P pressure, PD differential pressure

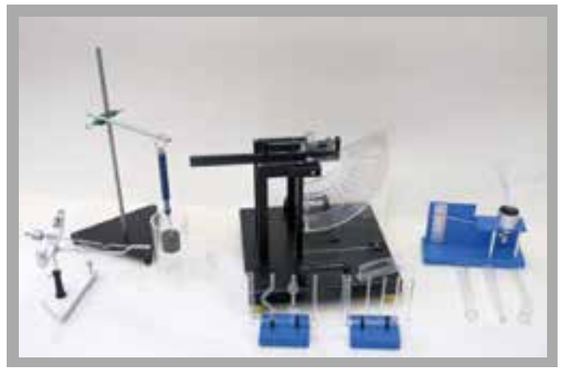

Accessories for a wide range of experiments

Specification

[1] comprehensive experimental introduction to hydrostatics
[2] transparent tank for observing the processes
[3] wide range of accessories included: compressor for generating negative pressures, bottom pressure apparatus, two areometers
[4] 1 experimental unit each: measuring the buoyancy force, investigation of the hydrostatic pressure in liquids, measuring the surface tension, communicating vessels, capillarity
[5] Pitot tube for determining the total pressure and tube for static pressure
[6] instruments: pressure sensor with digital display, differential pressure manometer, twin tube manometers, diaphragm manometer, Bourdon tube manometer

Technical Data

Pump
- power consumption: 250W
- max. flow rate: 9m³/h
- max. head: 7,6m

Compressor
- power: 65W
- delivery side: 2000mbar
- intake side: 240mbar

3 tanks
- height 500mm
- d=100mm, d=133mm, d=200mm

Supply tank for water: 55L
2 areometers with different measuring ranges

Measuring ranges
- pressure: 2x -1...1,5bar
- differential pressure: 0...500mmWC
- differential pressure: 0...0,4bar
- density: 1x 0,8...1g/cm³, 1x 1...1,2g/cm³

Dimensions and Weight

LxWxH: 1760x840x1950mm
Weight: approx. 250kg

Required for Operation

230V, 50/60Hz, 1 phase or 120V, 60Hz/CSA, 1 phase

Scope of Delivery

1 trainer
1 compressor
1 bottom pressure device
2 areometers
1 wedge-shaped tank
1 experimental unit each:
surface tension, hydrostatic pressure in fluids, buoyancy force, capillarity, communicating vessels
1 set of instructional material

Order Details

070.11500 HM 115 Hydrostatics Trainer

G.U.N.T Gerätebau GmbH, Hanskampring 15-17, D-22885 Barsbüttel, Phone +49 (40) 67 08 54-0, Fax +49 (40) 67 08 54-42, E-mail sales@gunt.de, Web http://www.gunt.de
We reserve the right to modify our products without any notifications.

HM 135 Determination of the Settling Velocity

*** Settling velocity of spheres of various diameters and densities**

Technical Description

The settling velocity of solids in fluids is an important factor in fluid mechanics and process engineering. For example, the settling velocity is the decisive factor when planning sedimentation tanks for water treatment.

HM 135 contains two transparent cylinders for comparative examinations. The two cylinders enable comparing the influence of the sphere diameter, sphere density and different fluids on the settling velocity. Guide tubes in the cover of the two cylinders enable safe insertion of the sphere. Two O-rings per cylinder mark the measuring section. At the lower end of the cylinder there is a sluice through which the spheres can be removed again without significant loss of fluid.

A stopwatch measures the sedimentation time. Two areometers with different measuring ranges enable the determination of the fluid densities.

The well-structured instructional material sets out the fundamentals and provides a step-by-step guide through the experiments.

Learning Objectives / Experiments

- influence of the following parameters on the settling velocity of spheres:
  * diameter of the sphere
  * density of the sphere
  * density of the fluid
  * viscosity of the fluid

HM 135 Determination of the Settling Velocity

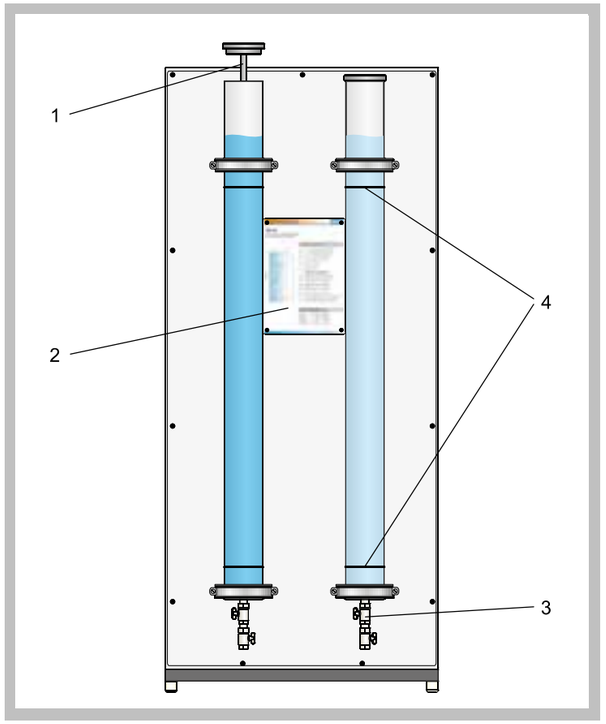

1 cover with guide tube, 2 info panel, 3 sluice, 4 marking of the measuring section

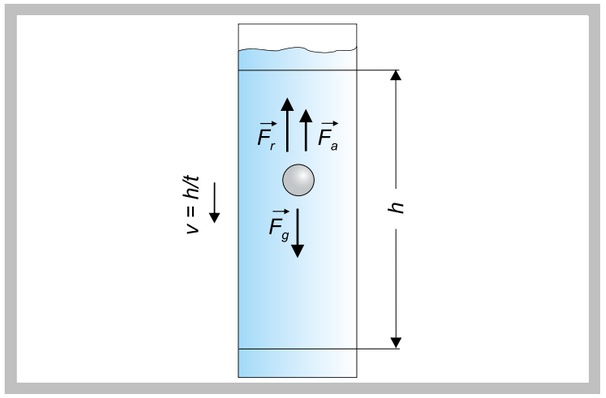

Determination of the settling velocity
v settling velocity, h sink height, t sedimentation time, F_g weight, F_a lift, F_r drag

Specification

[1] experimental unit to determine the settling velocity of different spheres
[2] 2 transparent cylinders
[3] marking of the measuring section
[4] cover with guide tube to insert the sphere
[5] sluice to remove the spheres from the cylinder
[6] 10 spheres of various densities and diameters
[7] 2 areometers to determine the density of the fluids
[8] stopwatch to measure the sedimentation time

Technical Data

2 cylinders
- inner diameter: 92mm each
- height: 1330mm each
- sink height: 1000mm each

Spheres
- aluminium (density: 2,7kg/dm³)
  2x 5mm diameter
  2x 10mm diameter
- polyoxymethylene (POM), density: 1,41kg/dm³
  2x 5mm diameter
  2x 10mm diameter
- polyamide (PA), density: 1,13kg/dm³
  2x 10mm diameter

Measuring range
- density: 1x 0,8...1,0kg/dm³, 1x 1,0...1,2kg/dm³

Dimensions and Weight

LxWxH: 720x640x1650mm
Weight: approx. 45kg

Scope of Delivery

1 experimental unit
1 set of spheres
2 areometers
1 glass cylinder for areometer
1 stopwatch
1 set of instructional material

Order Details

070.13500 HM 135 Determination of the Settling Velocity

G.U.N.T Gerätebau GmbH, Hanskampring 15-17, D-22885 Barsbüttel, Phone +49 (40) 67 08 54-0, Fax +49 (40) 67 08 54-42, E-mail sales@gunt.de, Web http://www.gunt.de
We reserve the right to modify our products without any notifications.

HM 155 Water Hammer in Pipes

*** Investigation of water hammer and pressure waves in pipes**
*** 60m long pipe section**
*** Measuring the velocity of sound in water**
*** Solenoid valve with adjustable closing time**
*** GUNT software for displaying the pressure curve**

Technical Description

Water hammer in pipes is a significant problem in engineering as they can cause severe damage to piping, fittings and system components. Water hammer is caused by the inertia effect of the flowing fluid being subjected to an abrupt changes in velocity, e.g. when rapidly closing a valve. Therefore, knowledge about the emergence of water hammer is an important aspect of designing pipework systems.

The HM 155 trainer can be used to study water hammer and pressure waves in long pipelines. Water hammer is generated by closing a valve at the end of the pipe section. The water hammer is then reflected to the beginning of the pipe as an inverted wave. A pressure vessel with air cushion at the start of the pipe section simulates the open beginning of the pipe, so that there is a clear reflection of the wave. In order to achieve reflection times that are large enough, a 60m long pipe section has been installed, which is shaped as a coiled tube to save space.

In experiments, the emergence of water hammer is studied as a function of the valve closing times. The trainer therefore includes two solenoid valves, one with constant closing time and one with adjustable closing time. The resulting pressure oscillations are measured by a pressure sensor and the pressure curve is displayed by the GUNT software.

A valve is used to adjust the flow rate. System pressure and flow rate are displayed. A safety valve protects the system against overpressure.

The well-structured instructional material sets out the fundamentals and provides a step-by-step guide through the experiments.

Learning Objectives / Experiments

- water hammer as a function of flow rate
- water hammer as a function of valve closing time
- display pressure curve
- determine reflection time
- calculation of the velocity of sound in water

HM 155 Water Hammer in Pipes

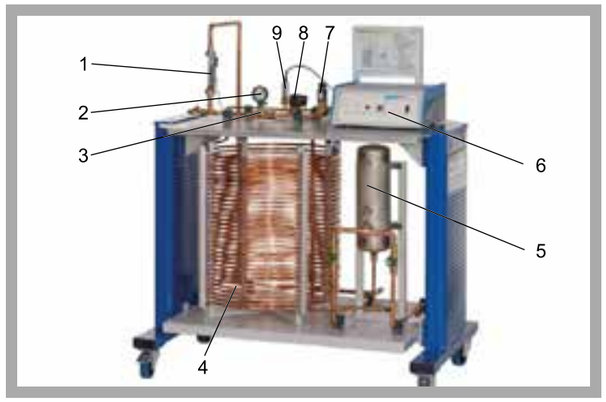

1 flow meter, 2 manometer, 3 valve for flow rate adjustment, 4 pipe section, 5 pressure vessel, 6 control unit, 7 adjustable solenoid valve, 8 constant solenoid valve, 9 pressure sensor

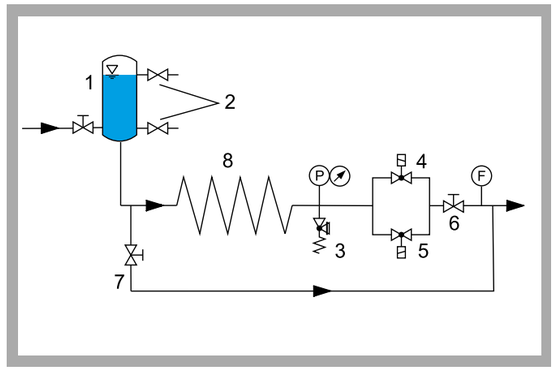

1 pressure vessel with air cushion, 2 valves for adjusting the level, 3 safety valve, 4 adjustable solenoid valve, 5 constant solenoid valve, 6 valve for adjusting flow rate, 7 valve for emptying the pressure vessel, 8 pipe section; P pressure, F flow rate

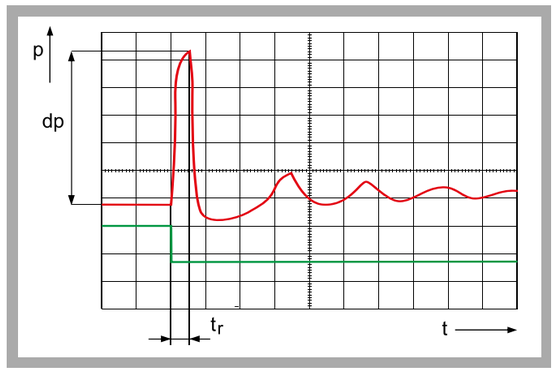

Course of pressure over time at solenoid valve with constant closing time; red: pressure curve, green: trigger signal; p pressure, t time, t_r reflection time, dp: water hammer

Specification

[1] investigation of water hammer and pressure waves in pipes
[2] pipe section as coiled tube to save space
[3] generation of water hammer via solenoid valve with constant closing time
[4] generation of water hammer via solenoid valve with adjustable closing time
[5] pressure vessel with air cushion reflects the wave
[6] safety valve protects against overpressure in the system
[7] instruments: pressure sensor, rotameter, manometer
[8] representation of the pressure curves and the flow rate with GUNT software
[9] GUNT software for data acquisition via USB under Windows Vista or Windows 7

Technical Data

Solenoid valve, constant closing time
- closing time: 20...30ms
- operating pressure: 0...10bar

Solenoid valve, adjustable closing time
- closing time: 1...4s
- operating pressure: 0,2...12bar

Safety valve: 16bar
Pipe section, copper
- length: 60m
- inner diameter: 10mm

Pressure vessel: 5L

Measuring ranges
- pressure: 0...16bar
- flow rate: 30...320L/h

Dimensions and Weight

LxWxH: 1310x790x1500mm
Weight: approx. 155kg

Required for Operation

230V, 50/60Hz, 1 phase or 120V, 60Hz/CSA, 1 phase
Water connection 300L/h, drain

Scope of Delivery

1 trainer
1 CD with GUNT software
1 set of hoses
1 set of instructional material

Order Details

070.15500 HM 155 Water Hammer in Pipes

G.U.N.T Gerätebau GmbH, Hanskampring 15-17, D-22885 Barsbüttel, Phone +49 (40) 67 08 54-0, Fax +49 (40) 67 08 54-42, E-mail sales@gunt.de, Web http://www.gunt.de
We reserve the right to modify our products without any notifications.

HM 136 Flow through Packed Columns

*** Transparent model of a packed column**

*** Flow through the column with water or air**

*** Parallel flow or counterflow mode**

Technical Description

Packed columns have a variety of uses in process engineering, waste water and air purification and in biotechnical systems. For example, in an adsorption column the two substances can be brought into close contact using the packing. When used as a fixed bed reactor, the packing carries the catalyst necessary for the reaction. Packing is available in the widest variety of shapes and materials.

Observing the desired flow conditions is vital for proper functioning. Wetting, contact time and flow resistance play a key role. These packed column properties can be studied with the HM 136 trainer, and important phenomena such as the wall effect or the flooding point can be demonstrated.

The central element of the trainer is the transparent packed column. The pressures in the top, middle and bottom of the column are measured, so that the pressure losses in the fixed bed can be determined. The column can be operated with air or water. When operating with water, the direction of flow can be changed, so that even a fully flooded column can be studied, such as in a fixed bed reactor. Operating the column with air and water in counterflow simulates the application as an absorption column. The packed bed is interchangeable, so that a laboratory's own packing can also be tried out.

The experimental unit has its own air and water supply. The closed water circuit consists of storage tank, pump, flow meter and valve. The air supply includes a compressor with flow meter and valve.

The well-structured instructional material sets out the fundamentals and provides a step-by-step guide through the experiments.

Learning Objectives / Experiments

- function of a packed column
- record pressure loss characteristic curve
- compare operating modes
  * with water
  * with air
  * air/water counterflow mode
- demonstration of
  * wall effect
  * stream formation
  * loading point
  * flooding point

HM 136 Flow through Packed Columns

1 digital pressure indicators, 2 air flow meter, 3 compressor for air, 4 storage tank, 5 pump for water, 6 bottom rising-falling switch valve, 7 water flow meter, 8 two-piece packed column, 9 top rising-falling switch valve

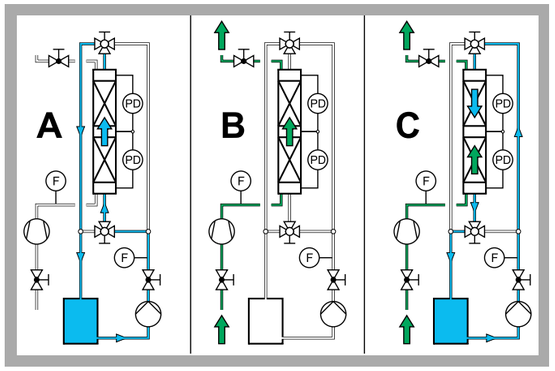

Different operating modes: A water rising, B air rising, C water falling, air rising (counterflow); F flow rate, PD differential pressure

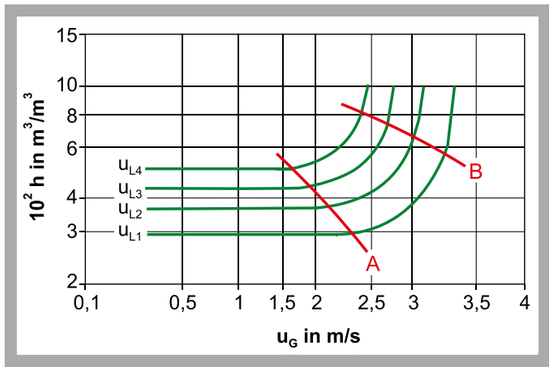

Liquid content of the column at different gas and liquid velocities: A loading point, B flooding point, h specific liquid content, u_G gas velocity, $u_{L1...4}$ specific liquid load

Specification

[1] trainer for studying the flow in packing layers
[2] transparent DURAN glass packed column with interchangeable packed bed
[3] operation with water and/or air
[4] water-air operation in parallel flow or counterflow
[5] water direction of flow can be reversed
[6] closed water circuit with a pump and storage tank
[7] compressor for air supply
[8] measurement of flow rate and pressure loss

Technical Data

Pump
- max. flow rate: 18L/min
- max. head: 50m

Compressor
- max. flow rate: 8m³/h
- max. delivery pressure: 1bar

Packed column
- inner diameter: 80mm
- length: 2x 500mm

Storage tank: 35L

Measuring ranges
- flow rate (air): 1...10m³/s
- flow rate (water): 50...600L/h
- differential pressure: 3x 0...100mbar

Dimensions and Weight

LxWxH: 1350x790x1980mm
Weight: approx. 200kg

Required for Operation

230V, 50Hz, 1 phase

Scope of Delivery

1 trainer
1 set of tools
1 packing package (Raschig rings)
1 set of instructional material

Order Details

070.13600 HM 136 Flow through Packed Columns

G.U.N.T Gerätebau GmbH, Hanskampring 15-17, D-22885 Barsbüttel, Phone +49 (40) 67 08 54-0, Fax +49 (40) 67 08 54-42, E-mail sales@gunt.de, Web http://www.gunt.de
We reserve the right to modify our products without any notifications.

RT 010 – RT 060 FUNDAMENTALS OF PROCESS CONTROL ENGINEERING

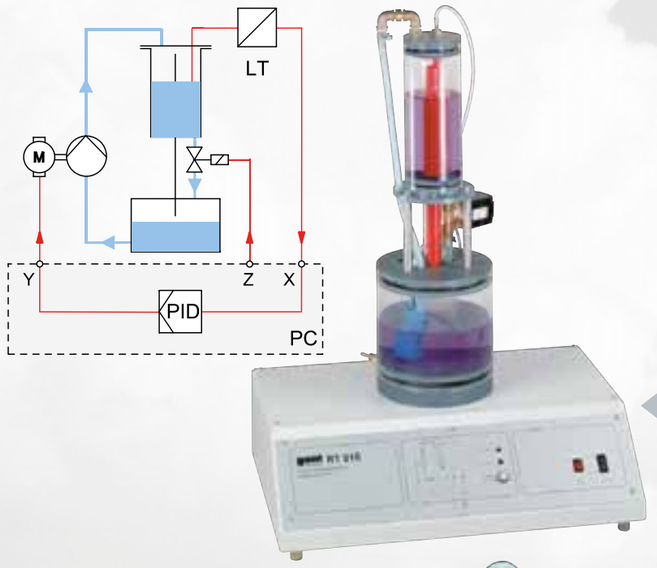

RT 010 *Level Control*

- level recording by pressure sensor
- level control by speed of pump
- electromagnetic valve to generate disturbance variables

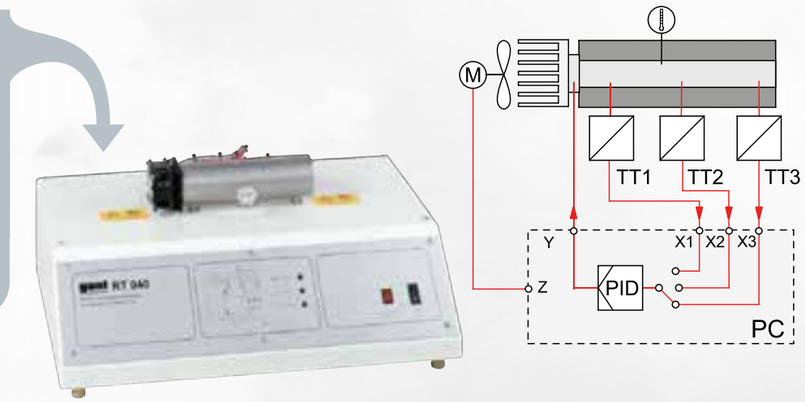

RT 040 *Temperature Control*

- temperature sensors at three positions
- heating and cooling of a metal bar by Peltier element
- switchable fan to generate disturbance variables

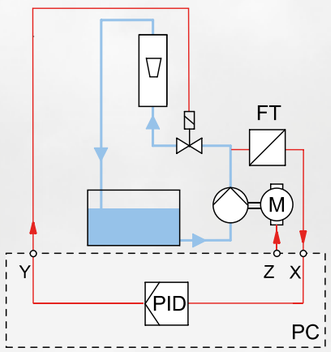

RT 020 *Flow Control*

- turbine wheel flow sensor
- electromagnetic proportional valve as actuator
- variable pump speed to generate disturbance variables

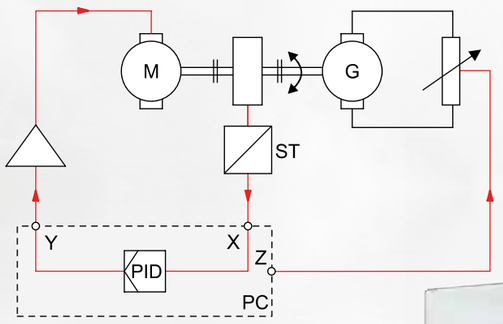

RT 050 *Speed Control*

- inductive speed sensor
- speed control by DC motor
- adjustable load to generate disturbance variables

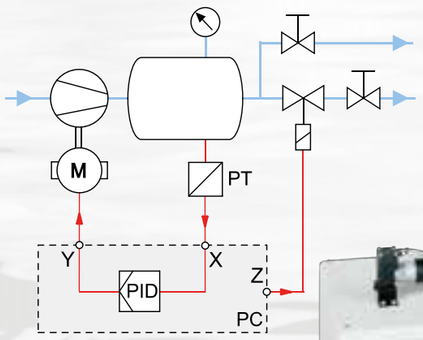

RT 030 *Pressure Control*

- electronic pressure sensor
- speed controlled diaphragm pump as actuator
- solenoid valve to generate disturbance variables

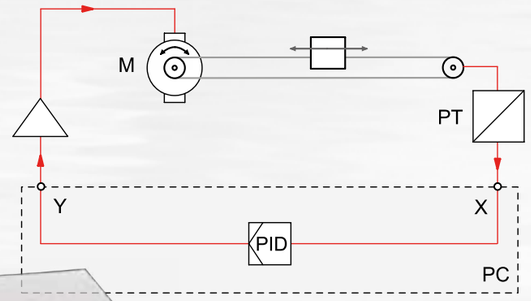

RT 060 *Position Control*

- rotary encoder as displacement sensor
- position control of a carriage by gear motor
- two microswitches to shut down at end positions

RT 010 Training System: Level Control, HSI

*** Experimental unit with clear level control system**

*** Extensive range of experiments on fundamentals of control engineering**

*** State-of-the-art software for all experimental units of the RT 010 - RT 060 series, with extensive controller and recorder functions**

*** Software-based simulation of the controlled system**

Technical Description

This compact experimental unit offers every opportunity to learn the fundamentals of control engineering through experimentation on a level control system.

The experimental set-up is mounted in a housing which also accommodates all the electronics. The transparent level-controlled tank is fed from the storage tank with the aid of a speed-controlled pump. The liquid level is measured using a pressure sensor. The sensor output signal is sent to the software controller. The controller's output signal influences the speed of the pump motor and therefore delivery flow rate. To investigate the influence of disturbance variables, an electromagnetic proportional valve in the tank outlet can be activated by the software.

The powerful state-of-the-art software is an integral part of the training system, embodying the principle of hardware/software integration (HSI). It enables the experiments to be conducted and evaluated in a user-friendly manner. The software has network capability. The link between the experimental unit and the PC is made via a USB port.

The well-structured instructional material sets out the fundamentals and provides a step-by-step guide through the experiments.

Learning Objectives / Experiments

- fundamentals of control engineering based on the example of a level control system with integral control action
- open loop control response
- investigation of a controlled system without feedback
- effects of different controller parameters and methods on the response of the closed loop system
- recording of step responses
  * reference variable
  * disturbance variable
- controller optimisation
- software-based controlled system simulation
  * comparison of different controlled system parameters

RT 010 Training System: Level Control, HSI

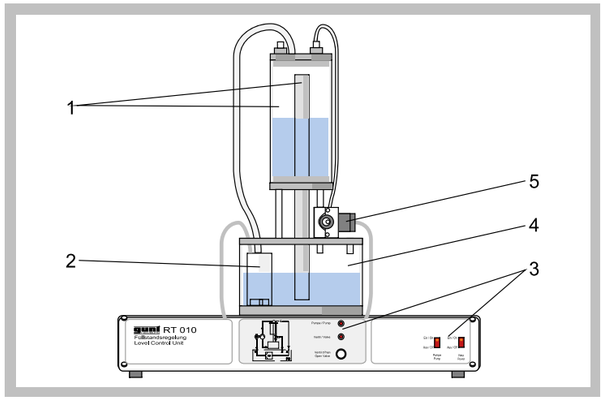

1 level-controlled tank with overflow, 2 pump, 3 displays and controls, 4 storage tank, 5 proportional valve

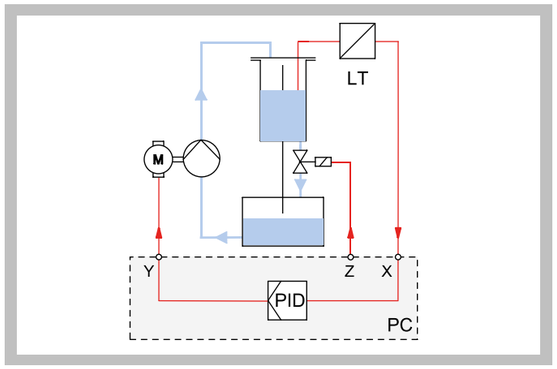

Process schematic

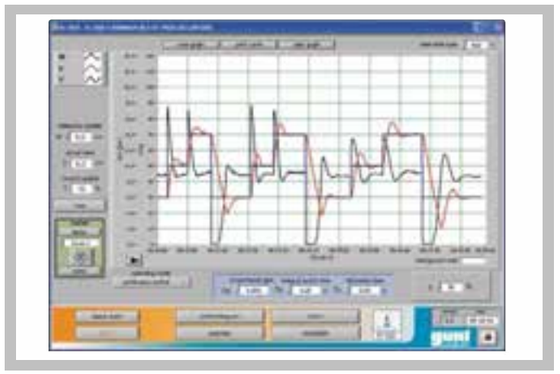

Software screenshot: PI control of level control system: step response to change in reference variable with different values for K_p and T_n

Specification

[1] experimental unit for control engineering experiments
[2] level control process with transparent tank
[3] speed-controlled pump
[4] level measurement by pressure sensor
[5] disturbance variables generated by electromagnetic proportional valve in tank outlet
[6] tank with overflow and graduated scale
[7] software-based controlled system simulation
[8] process schematic on front panel
[9] networkable GUNT software via USB under Windows Vista or Windows 7

Technical Data

Level-controlled tank
- capacity: 1200mL

Storage tank
- capacity: 3700mL

Pump
- power consumption: 18W
- max. flow rate: 8L/min
- max. head: 6m

Proportional valve: Kvs: 0,7m³/h
Pressure sensor: 0...30mbar (0...300mm)
Software controller configurable as P, PI, PID and switching controller
Software
- process schematic with controller type selection (manual, continuous controller, two- or three-point controller, programmer)
- time functions
- simulation function
- disturbance variable input

Dimensions and Weight

LxWxH: 600x450x800mm
Weight: approx. 22kg

Required for Operation

230V, 50/60Hz, 1 phase or 120V, 60Hz/CSA, 1 phase

Scope of Delivery

1 experimental unit
1 GUNT software CD + USB cable
1 hose
1 handbook: fundamentals of control engineering (RT 010 - RT 060)
1 manual for RT 010

Order Details

080.01000 RT 010 Training System: Level Control, HSI

G.U.N.T Gerätebau GmbH, Hanskampring 15-17, D-22885 Barsbüttel, Phone +49 (40) 67 08 54-0, Fax +49 (40) 67 08 54-42, E-mail sales@gunt.de, Web http://www.gunt.de
We reserve the right to modify our products without any notifications.

RT 020 Training System: Flow Control, HSI

*** Experimental unit with clear flow control system**

*** Extensive range of experiments on fundamentals of control engineering**

*** State-of-the-art software for all experimental units of the RT 010 - RT 060 series, with extensive controller and recorder functions**

*** Software-based simulation of the controlled system**

Technical Description

This compact experimental unit offers every opportunity to learn the fundamentals of control engineering through experimentation on a flow control system. The experimental set-up is mounted in a housing which accommodates all the electronics.

A piping system with two flowmeters is supplied with flow by a speed-controlled pump from the transparent storage tank. The rotameter offers the advantage that the flow rate can be observed directly at any time. The flow rate is measured by a turbine wheel flow sensor. The sensor output signal is sent to the software controller. The output signal from the controller influences the setting of an electromagnetic proportional valve. To investigate the influence of disturbance variables, the pump speed can be altered by way of the software.

The powerful state-of-the-art software is an integral part of the training system, embodying the principle of hardware/software integration (HSI). It enables the experiments to be conducted and evaluated in a user-friendly manner. The software has network capability. The link between the experimental unit and the PC is made via a USB port.

The well-structured instructional material sets out the fundamentals and provides a step-by-step guide through the experiments.

Learning Objectives / Experiments

- fundamentals of control engineering based on the example of a rapid flow control system
- open loop control response
- effects of different controller parameters and methods on the response of the closed loop system
- recording of step responses
  * reference variable
  * disturbance variable
- controller optimisation
- software-based controlled system simulation
  * comparison of different controlled system parameters

RT 020 Training System: Flow Control, HSI

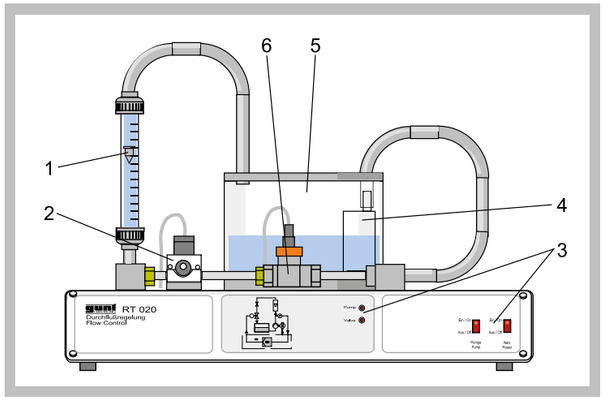

1 rotameter, 2 proportional valve, 3 displays and controls, 4 pump, 5 storage tank, 6 flow sensor

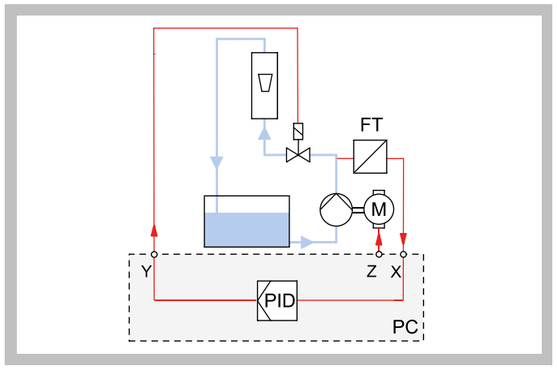

Process schematic

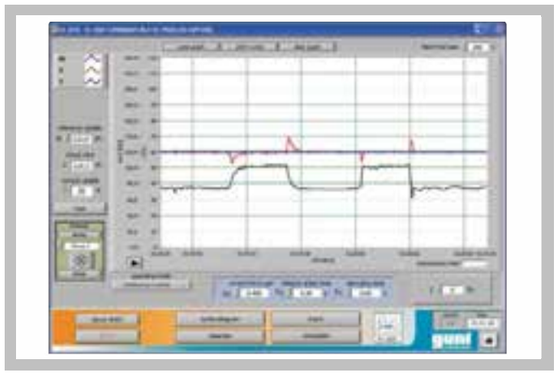

Software screenshot: flow control, controller with PI response with different values for K_p and T_n, introduction of a disturbance variable

Specification

[1] experimental unit for control engineering experiments
[2] flow control system with variable-area flowmeter
[3] electromagnetic proportional valve as actuator
[4] turbine wheel flow sensor
[5] generation of disturbance variables by altering pump speed
[6] software-based controlled system simulation
[7] process schematic on front panel
[8] networkable GUNT software via USB under Windows Vista or Windows 7

Technical Data

Storage tank
- capacity: approx. 3000mL

Pump
- power consumption: 18W
- max. flow rate: 8L/min
- max. head: 6m

Rotameter: 20...250L/h
Proportional valve: Kvs: 0,7m³/h
Flow sensor: 0,5...3L/min
Software controller configurable as P, PI, PID and switching controller
Software
- process schematic with controller type selection (manual, continuous controller, two- or three-point controller, programmer)
- time functions
- simulation function
- disturbance variable input

Dimensions and Weight

LxWxH: 600x450x600mm
Weight: approx. 21kg

Required for Operation

230V, 50/60Hz, 1 phase or 120V, 60Hz/CSA, 1 phase

Scope of Delivery

1 experimental unit
1 hose
1 GUNT software CD + USB cable
1 handbook: fundamentals of control engineering (RT 010 - RT 060)
1 manual for RT 020

Order Details

080.02000 RT 020 Training System: Flow Control, HSI

G.U.N.T Gerätebau GmbH, Hanskampring 15-17, D-22885 Barsbüttel, Phone +49 (40) 67 08 54-0, Fax +49 (40) 67 08 54-42, E-mail sales@gunt.de, Web http://www.gunt.de
We reserve the right to modify our products without any notifications.

RT 030 Training System: Pressure Control, HSI

- **Experimental unit with diaphragm gas pump and pressure tank**
- **Extensive range of experiments on fundamentals of control engineering**
- **State-of-the-art software for all experimental units of the RT 010 - RT 060 series, with extensive controller and recorder functions**
- **Software-based simulation of the controlled system**

Technical Description

This compact experimental unit offers every opportunity to learn the fundamentals of control engineering through experimentation on a pressure control system.

The experimental set-up is mounted on a housing which accommodates all the electronics. The pressure tank is charged with compressed air by a diaphragm gas pump. The advantage of the dial-gauge manometer is that the pressure in the tank can be observed directly at any time. The pressure is measured using a pressure sensor. The sensor output signal is sent to the software controller. The output signal from the controller influences the speed of the diaphragm gas pump and hence the flow rate. An air consumer is simulated by way of a flow control valve. A solenoid valve through which air can escape can be activated by the software to investigate the influence of disturbance variables.

The powerful state-of-the-art software is an integral part of the training system, embodying the principle of hardware/software integration (HSI). It enables the experiments to be conducted and evaluated in a user-friendly manner. The software has network capability. The link between the experimental unit and the PC is made via a USB port.

The well-structured instructional material sets out the fundamentals and provides a step-by-step guide through the experiments.

Learning Objectives / Experiments

- fundamentals of control engineering based on the example of a pressure control system with PT_1 behaviour
- open loop control response
- effects of different controller parameters and methods on the response of the closed loop system
- recording of step responses
  * reference variable
  * disturbance variable
- controller optimisation
- software-based controlled system simulation
  * comparison of different controlled system parameters

RT 030 Training System: Pressure Control, HSI

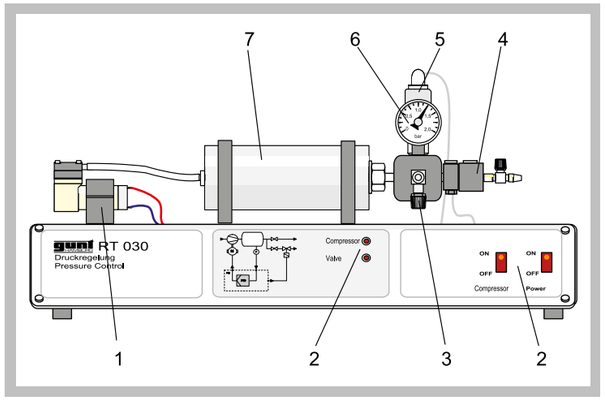

1 diaphragm gas pump, 2 displays and controls, 3 drain valve, 4 solenoid valve to generate disturbance variables, 5 pressure sensor, 6 manometer, 7 pressure tank

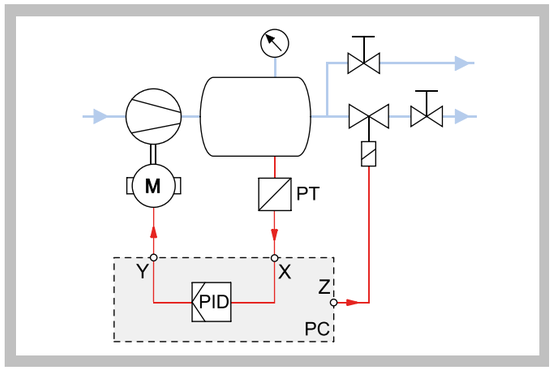

Process schematic

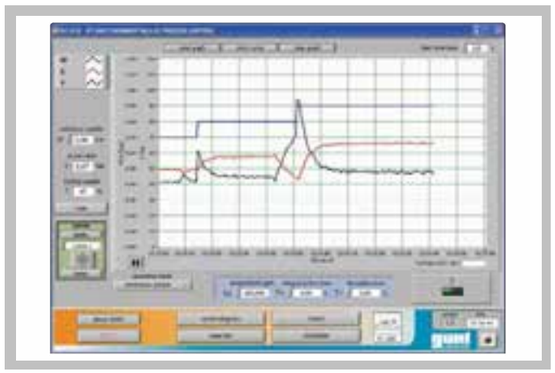

Software screenshot: continuous P control: a step of the reference variable results in a permanent control deviation

Specification

[1] experimental unit for control engineering experiments
[2] pressure control in a tank
[3] speed controlled diaphragm gas pump
[4] electronic pressure sensor
[5] solenoid valve to generate disturbance variables
[6] software-based controlled system simulation
[7] process schematic on front panel
[8] networkable GUNT software via USB under Windows Vista or Windows 7

Technical Data

Diaphragm gas pump
- max. flow rate: 3L/min
- max. positive pressure: 1bar
- max. negative pressure: 250mbar abs.

Pressure tank
- capacity: 400mL
- operating pressure: 1bar
- max. pressure: 10bar

Pressure control range: 0...1bar
Solenoid valve: Kvs: 0,11m³/h
Pressure transducer: 0...1bar
Manometer: 0...1bar
Software controller configurable as P, PI, PID and switching controller
Software
- process schematic with controller type selection (manual, continuous controller, two- or three-point controller, programmer)
- time functions
- simulation function
- disturbance variable input

Dimensions and Weight

LxWxH: 600x450x340mm
Weight: approx. 18kg

Required for Operation

230V, 50/60Hz, 1 phase or 120V, 60Hz/CSA, 1 phase

Scope of Delivery

1 experimental unit
1 GUNT software CD + USB cable
1 handbook: fundamentals of control engineering (RT 010 - RT 060)
1 manual for RT 030

Order Details

080.03000 RT 030 Training System: Pressure Control, HSI

G.U.N.T Gerätebau GmbH, Hanskampring 15-17, D-22885 Barsbüttel, Phone +49 (40) 67 08 54-0, Fax +49 (40) 67 08 54-42, E-mail sales@gunt.de, Web http://www.gunt.de
We reserve the right to modify our products without any notifications.

RT 040 Training System: Temperature Control, HSI

*** Experimental unit with temperature control system**

*** Extensive range of experiments on fundamentals of control engineering**

*** Heating and cooling with Peltier element**

*** State-of-the-art software for all experimental units of the RT 010 - RT 060 series, with extensive controller and recorder functions**

*** Software-based simulation of the controlled system**

Technical Description

This compact experimental unit offers every opportunity to learn the fundamentals of control engineering through experimentation on a temperature control system.

The experimental set-up is mounted on a housing which accommodates all the electronics. A metal bar, which is thermally insulated with cladding, is heated or cooled at one end by a Peltier element. Three temperature transducers along the axis of the bar allow the variation in temperature along the length of the bar, and hence the associated thermal lags, to be obtained for differing operating conditions. A dial-gauge thermometer offers the advantage that the temperature can be read off directly at any time. The temperature is measured using a thermal resistor (PTC). The sensor output signal is sent to the software controller. The output signal from the controller influences the operating voltage of the Peltier element and hence the heating capacity. A fan that dissipates part of the heating power can be activated by the software to investigate the influence of disturbance variables.

The powerful state-of-the-art software is an integral part of the training system, embodying the principle of hardware/software integration (HSI). It enables the experiments to be conducted and evaluated in a user-friendly manner. The software has network capability. The link between the experimental unit and the PC is made via a USB port.

The well-structured instructional material sets out the fundamentals and provides a step-by-step guide through the experiments.

Learning Objectives / Experiments

- fundamentals of control engineering based on the example of a temperature control system. System dead time can be obtained from the response
- open loop control response.
- effects of different controller parameters and methods on the response of the closed loop system
  - recording of step responses
  - * reference variable
  - * disturbance variable
- controller optimisation
- software-based controlled system simulation
  - * comparison of different controlled system parameters

RT 040 Training System: Temperature Control, HSI

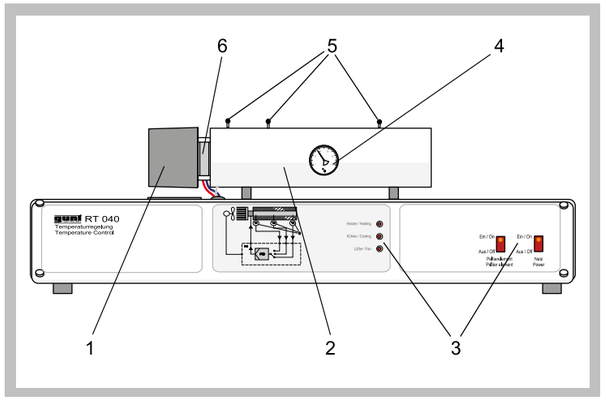

1 fan, 2 bar in cladding tube, 3 displays and controls, 4 thermometer, 5 temperature sensor, 6 heater/cooler

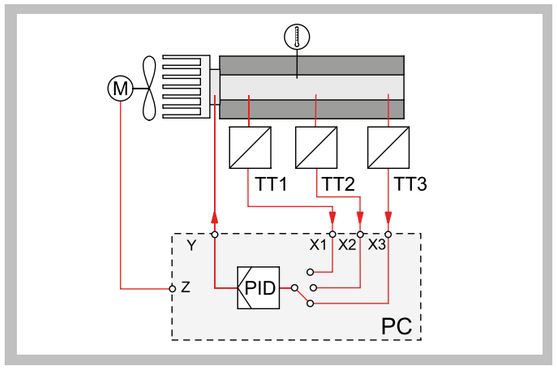

Process schematic

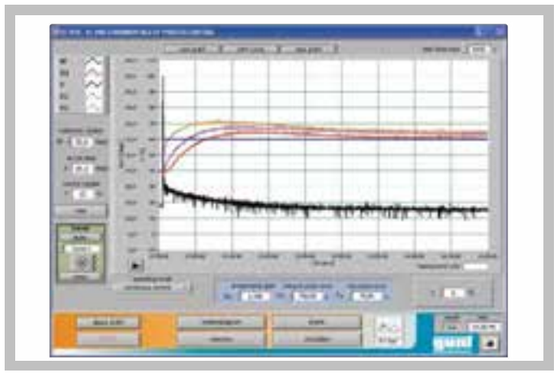

Software screenshot: step response to reference variable with PID controller with non-optimised values for K_p, T_n and T_v

Specification

[1] experimental unit for control engineering experiments
[2] temperature control of a heated metal bar
[3] heating and cooling by Peltier element
[4] temperature sensors at 3 different points along axis of bar to establish thermal lags
[5] software activated fan to generate disturbance variables
[6] software-based controlled system simulation
[7] process schematic on front panel
[8] networkable GUNT software via USB under Windows Vista or Windows 7

Technical Data

Heated bar: DxL: 20x200mm, aluminium
Peltier element
- power consumption depending on temperature
  power at 300K: 38,2W
  power at 50°C: 44,3W
- operated by DC voltage

Fan
- power consumption: 2W
- max. flow rate: 40m³/h

Temperature sensor: 0...100°C
Thermometer: 0...100°C
Temperature control range: 0...100°C
Software controller configurable as P, PI, PID and switching controller
Software
- process schematic with controller type selection (manual, continuous controller, two- or three-point controller, programmer)
- time functions
- simulation function
- disturbance variable input

Dimensions and Weight

LxWxH: 600x450x260mm
Weight: approx. 16kg

Required for Operation

230V, 50/60Hz, 1 phase or 120V, 60Hz/CSA, 1 phase

Scope of Delivery

1 experimental unit
1 GUNT software CD + USB cable
1 handbook: Fundamentals of control engineering (RT 010 - RT 060)
1 manual for RT 040

Order Details

080.04000 RT 040 Training System: Temperature Control, HSI

G.U.N.T Gerätebau GmbH, Hanskampring 15-17, D-22885 Barsbüttel, Phone +49 (40) 67 08 54-0, Fax +49 (40) 67 08 54-42, E-mail sales@gunt.de, Web http://www.gunt.de
We reserve the right to modify our products without any notifications.

RT 050 Training System: Speed Control, HSI

*** Experimental unit with speed control system**

*** Extensive range of experiments on fundamentals of control engineering**

*** State-of-the-art software for all experimental units of the RT 010 - RT 060 series, with extensive controller and recorder functions**

*** Software-based simulation of the controlled system**

Technical Description

This compact experimental unit offers every opportunity to learn the fundamentals of control engineering through experimentation on a speed control system.

The experimental set-up is mounted on a housing which accommodates all the electronics. A transparent protective cover permits safe observation of the experiments. A DC motor drives a shaft with a mass flywheel. The dial gauge allows the speed to be read off directly at any time. The speed is measured inductively using a speed sensor. The output signal from the sensor is sent to the software controller. The output signal from the controller influences the motor current. A generator acting as a mechanical resistance to shaft rotation can be activated by the software to study the influence of disturbance variables.

The powerful state-of-the-art software is an integral part of the training system, embodying the principle of hardware/software integration (HSI). It enables the experiments to be conducted and evaluated in a user-friendly manner. The software has network capability. The link between the experimental unit and the PC is made via a USB port.

The well-structured instructional material sets out the fundamentals and provides a step-by-step guide through the experiments.

Learning Objectives / Experiments

- fundamentals of control engineering based on the example of a speed control system with PT_1 behaviour
- open loop control response
- effects of different controller parameters and methods on the response of the closed loop system
- recording of step responses
  * reference variable
  * disturbance variable
- controller optimisation
- software-based controlled system simulation
  * comparison of different controlled system parameters

RT 050 Training System: Speed Control, HSI

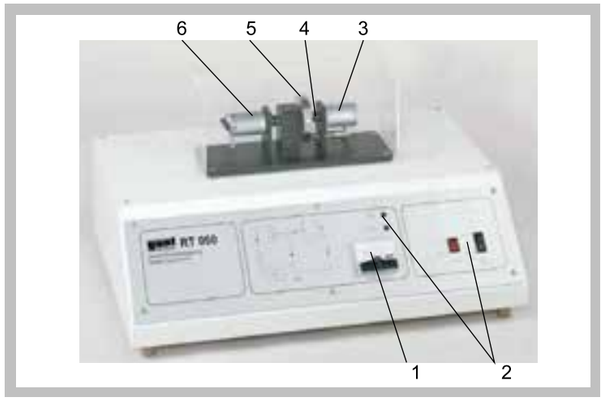

1 tachometer, 2 displays and controls, 3 generator, 4 speed sensor, 5 rotor, 6 motor

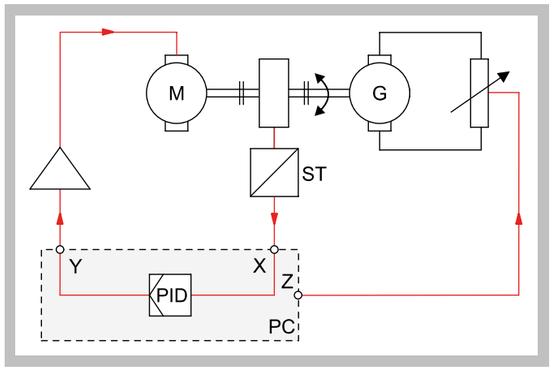

Process schematic

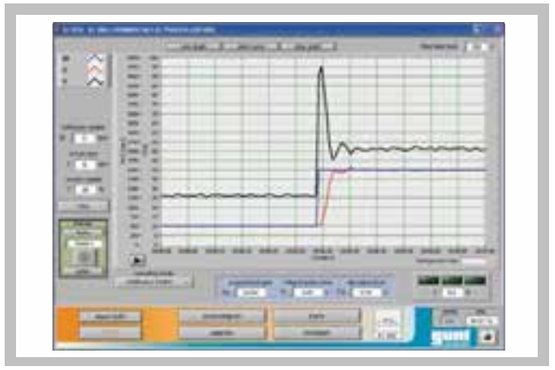

Software screenshot: step response to change in reference variable with PID controller (acceptable control quality)

Specification

[1] experimental unit for control engineering experiments
[2] speed control of a DC motor with shaft and flywheel
[3] transparent protective cover for motor/generator set
[4] inductive speed sensor
[5] generation of disturbance variables by adjustable generator load
[6] software-based controlled system simulation
[7] process schematic on front panel
[8] networkable GUNT software via USB under Windows Vista or Windows 7

Technical Data

Motor
- max. speed: 4500min^{-1}
- max. motor power output: 10W
- max. torque: 1,7Ncm

Generator
- max. speed: 4500min^{-1}
- max. power output: 10W
- max. torque: 1,7Ncm

Tachometer (analogue): 0...6.000min^{-1}
Software controller configurable as P, PI and PID controller
Software
- process schematic with controller type selection (manual, continuous controller, programmer)
- time functions
- simulation function
- disturbance variable input

Dimensions and Weight

LxWxH: 600x450x310mm
Weight: approx. 18kg

Required for Operation

230V, 50/60Hz, 1 phase or 120V, 60Hz/CSA, 1 phase

Scope of Delivery

1 experimental unit
1 GUNT software CD + USB cable
1 handbook: fundamentals of control engineering (RT 010 - RT 060)
1 manual for RT 050

Order Details

080.05000 RT 050 Training System: Speed Control, HSI

G.U.N.T Gerätebau GmbH, Hanskampring 15-17, D-22885 Barsbüttel, Phone +49 (40) 67 08 54-0, Fax +49 (40) 67 08 54-42, E-mail sales@gunt.de, Web http://www.gunt.de
We reserve the right to modify our products without any notifications.

RT 060 Training System: Position Control, HSI

*** Experimental unit with clear linear position control system**

*** Extensive range of experiments on fundamentals of control engineering**

*** State-of-the-art software for all experimental units of the RT 010 - RT 060 series, with extensive controller and recorder functions**

*** Software-based simulation of the controlled system**

Technical Description

This compact experimental unit offers every opportunity to learn the fundamentals of control engineering through experimentation on a linear position control system.

The experimental set-up is mounted on a housing which accommodates all the electronics. A transparent protective cover permits safe observation of the experiments. A carriage can be moved by a DC motor via a toothed belt. The linear positioning is measured by a rotary encoder and delivered as a voltage signal. The output signal from the sensor is sent to the software controller. The output signal from the controller influences the motor current. The motor is automatically shut down if the carriage reaches one of the two end positions.

The powerful state-of-the-art software is an integral part of the training system, embodying the principle of hardware/software integration (HSI). It enables the experiments to be conducted and evaluated in a user-friendly manner. The software has network capability. The link between the experimental unit and the PC is made via a USB port.

The well-structured instructional material sets out the fundamentals and provides a step-by-step guide through the experiments.

Learning Objectives / Experiments

- fundamentals of control engineering based on the example of a linear position control system with integral control action
- open loop control response
- effects of different controller parameters and methods on the response of the closed loop system
- recording of step responses
  * reference variable
- controller optimisation
- software-based controlled system simulation
  * comparison of different controlled system parameters

RT 060 Training System: Position Control, HSI

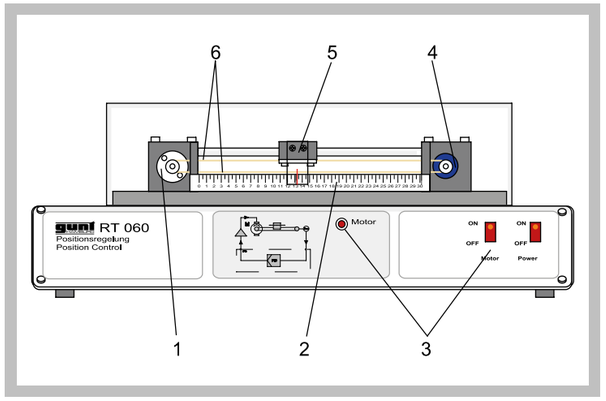

1 motor, 2 scale, 3 displays and controls, 4 rotary encoder, 5 carriage, 6 toothed belt

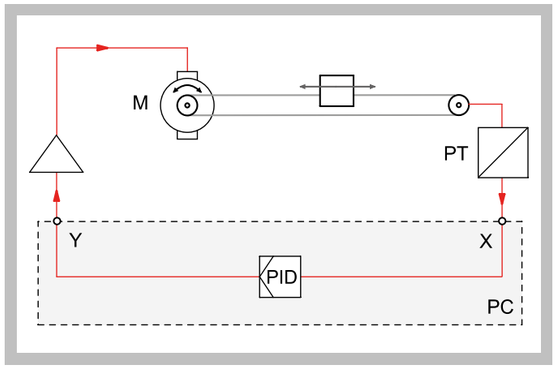

Process schematic

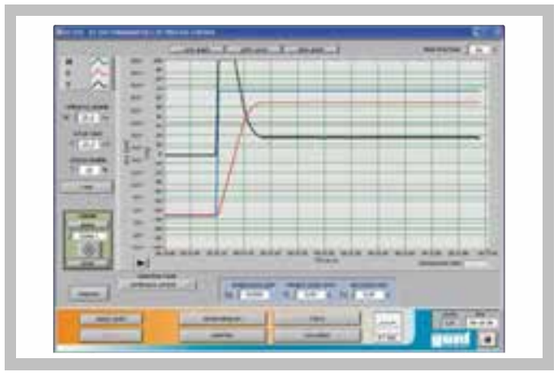

Software screenshot: step response to change in reference variable with P controller (permanent control deviation)

Specification

[1] experimental unit for control engineering experiments
[2] linear position control of carriage with linear drive and gear motor
[3] rotary encoder as displacement sensor
[4] transparent protective cover
[5] 2 microswitches to shut down at end positions
[6] software-based controlled system simulation
[7] process schematic on front panel
[8] networkable GUNT software via USB under Windows Vista or Windows 7

Technical Data

DC motor
- transmission ratio: i=50
- speed: 85min^{-1}
- torque: 200Nmm

Travel: max. 300mm
Max. traverse rate: 45mm/s
Scale: 0...300mm
Software controller configurable as P, PI, PID
Software
- process schematic with controller type selection (manual, continuous controller, programmer)
- time functions
- simulation function

Dimensions and Weight

LxWxH: 600x450x280mm
Weight: approx. 20kg

Required for Operation

230V, 50/60Hz, 1 phase or 120V, 60Hz/CSA, 1 phase

Scope of Delivery

1 experimental unit
1 GUNT software CD + USB cable
1 handbook: fundamentals of control engineering (RT 010 - RT 060)
1 manual for RT 060

Order Details

080.06000 RT 060 Training System: Position Control, HSI

G.U.N.T Gerätebau GmbH, Hanskampring 15-17, D-22885 Barsbüttel, Phone +49 (40) 67 08 54-0, Fax +49 (40) 67 08 54-42, E-mail sales@gunt.de, Web http://www.gunt.de
We reserve the right to modify our products without any notifications.

RT 800 PLC Application: Mixing Process

* **Trainer for control of discontinuous mixing processes by PLC**
* **Use of standard industrial components**
* **Capacitive proximity switches as level sensors**
* **Built-in power supply unit to power all the components and the PLC**

Technical Description

This trainer for PLC applications can be used to create complex PLC control functions from the field of process engineering, particularly for processes involving metering and mixing. The system consists of the base frame with a storage tank, a centrifugal pump and a demonstration panel on which all components are clearly laid out. A pump delivers water to three tanks, controlled via solenoid valves. The level of water in the three tanks is monitored by capacitive proximity switches with adjustable sensitivity. The fluid from the three tanks can be mixed together in the downstream mixing tank. The mixing tank is also equipped with three proximity switches. A stirring machine assists the mixing process. All the tanks are transparent, so the conveying and mixing processes are clearly observable.

The trainer features a lab jack panel by which the signals from the capacitive proximity switches can be processed by PLC, and all the solenoid valves can be individually controlled. PLC systems from different manufacturers can be used. A rail on the model's front panel is provided so as to allow for connection of the PLC. Although a PLC is not included in the package, the operation of the system can be checked without one. We recommend the use of PLC module IA 130.

The well-structured instructional material sets out the fundamentals and provides a step-by-step guide through the experiments.

Learning Objectives / Experiments

- planning and implementation of a PLC controlled mixing process
- familiarisation with terms and symbols
- presentation of circuits
- functionality test of all sensors and actuators
- sensitivity adjustment of the capacitive proximity switches
- procedure for connecting up the PLC
- together with PLC module: performance of complex PLC control functions using a complex example from the field of process engineering
- discontinuous metering and mixing

RT 800 PLC Application: Mixing Process

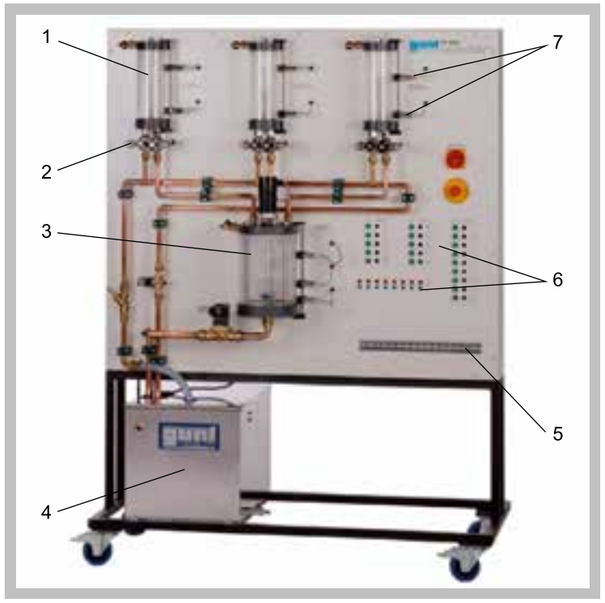

1 measuring tank, 2 solenoid valve, 3 mixing tank with stirring machine, 4 storage tank, 5 rail for mounting of a PLC system, 6 lab jack panel for connection of a PLC, 7 level sensor

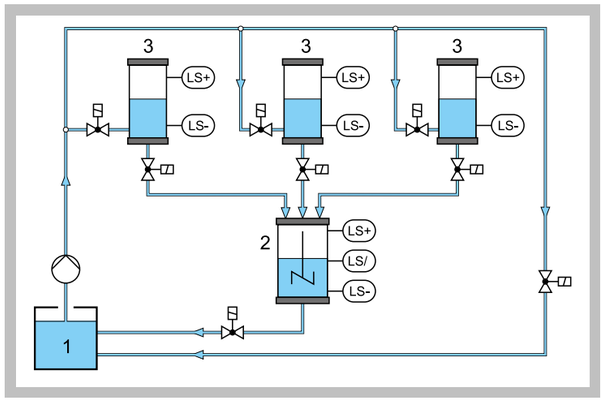

Process schematic: 1 storage tank, 2 mixing tank, 3 measuring tank;
LS level sensors (+: high, /: middle, -: low)

Specification

[1] clearly laid out trainer as basis for the use of a PLC in a process control application involving mixing processes
[2] transparent mixing tank with 3 capacitive proximity switches to monitor the level
[3] 3 transparent measuring tanks, each with 2 capacitive proximity switches
[4] metering from the 3 measuring tanks into the mixing tank via solenoid valves
[5] mixing assisted by stirring machine in mixing tank
[6] proximity switch signals processed by PLC via lab jack panel
[7] control of the 8 solenoid valves, the pump and the agitator also by PLC via lab jack panel
[8] capacitive proximity switches with adjustable sensitivity
[9] closed water circuit with centrifugal pump and stainless steel storage tank
[10] power supply to all components and to PLC by built-in power supply unit

Technical Data

Centrifugal pump (submersible pump)
- power consumption: 430W
- max. flow rate: 150L/min
- max. head: 7m

Tanks
- storage tank: 70L
- 3 measuring tanks: each 1500mL
- mixing tank: 7L

Capacitive proximity switches, NO contacts
2/2-way solenoid valves DN 8 and DN 20
Power supply unit: 24VDC, 8A

Dimensions and Weight

LxWxH: 1380x610x1850mm
Weight: approx. 145kg

Required for Operation

230V, 50/60Hz, 1 phase or 120V, 60Hz/CSA, 1 phase

Scope of Delivery

1 trainer
1 set of instructional material

Order Details

080.80000 RT 800 PLC Application: Mixing Process

G.U.N.T Gerätebau GmbH, Hanskampring 15-17, D-22885 Barsbüttel, Phone +49 (40) 67 08 54-0, Fax +49 (40) 67 08 54-42, E-mail sales@gunt.de, Web http://www.gunt.de
We reserve the right to modify our products without any notifications.

IA 130 PLC Module

*** Self-contained PLC module for basic exercises**
*** Suitable for use in complex applications**
*** Programming software to IEC 61131-3**

Technical Description

The IA 130 can be used to perform basic exercises on a PLC (programmable logic controller). A PLC is essentially a computer adapted to the needs of industry. Its inputs and outputs are not designed for humans, but for use in the control of machines. Machine and operator interact solely by way of limit switches, momentary-contact switches or photoelectric switches.

The front panel is designed as a laboratory patchboard, where the input ports and output ports of the PLC can be connected to switches and displays via laboratory cables. In order to write programs the PLC must be connected to a PC (not supplied) via an RS232 interface.

The PLC programming software conforms to the international standard IEC 61131-3, and permits programming in the following languages: Statement List (STL), Ladder Diagram (LD), Structured Text (ST) and Function Block Diagram (FBD). Ladder Diagrams are based on graphical representations with contacts, coils and boxes, as per the circuit diagrams. Function Block Diagram language is based on graphical representation of the interlinking of logical function blocks, analogous to the logic diagrams. Statement List is an assembler-type language with a small, standardised non-hardware-dependent command set. Structured Text is a language similar to PASCAL, with mathematical expressions, assignments, function calls, iteration, condition selection, and PLC-specific add-ons. An example program is included in the module.

IA 130 can be used as a control element in conjunction with electrical, pneumatic or hydraulic applications, such as with the handling device IA 210 or the mixing process RT 800.

The well-structured instructional material sets out the fundamentals and provides a step-by-step guide through the experiments.

Learning Objectives / Experiments

- familiarisation with a PLC
- familiarisation with the essential fundamentals such as
  * Boolean algebra
  * compiling statement lists
  * interconnection diagrams and block diagrams
- exercises in
  * programming
  * logical "AND" / "OR" gates
  * logic relays
  * output and input
- configuration of program sequences by way of connectors, incorporating
  * timers
  * counters
  * cascade circuits
  * higher-order monitoring relays etc.
- fault finding

IA 130 PLC Module

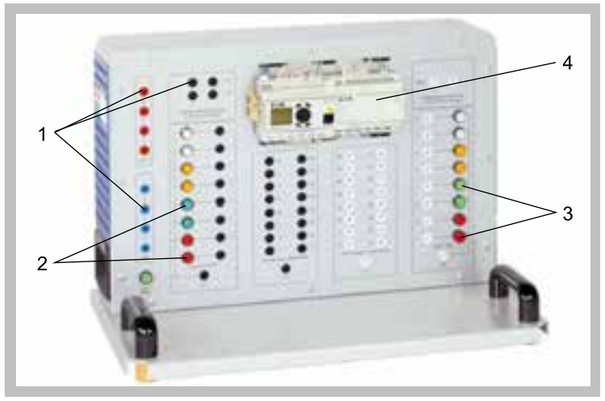

1 lab jacks, 2 pushbutton, 3 lamps, 4 PLC

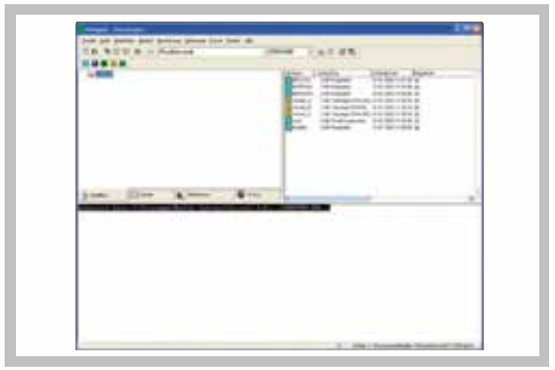

Screenshot of PLC software: start screen

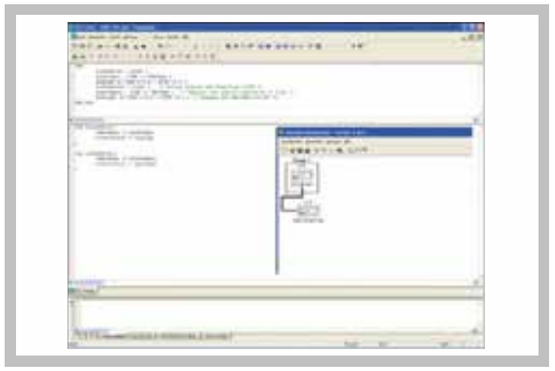

Screenshot of PLC software: POU editor (POU = Program Organisation Unit) and topology configurator

Specification

[1] module for basic exercises on a programmable logic controller (PLC)
[2] self-contained PLC module, usable as part of a complex system
[3] integrated patchboard for creating circuits with input and output elements
[4] PLC with 2 integrated setpoint encoders
[5] programming software to IEC 61131-3
[6] example program supplied

Technical Data

PLC
- connections
  * 16 digital inputs
  * 16 digital outputs
  * 2 analogue inputs
  * 1 analogue output
- memory type: PLC back-up battery for 32kByte RAM and clock
- Rated voltage: 24VDC

Software
- graphical user interfaces
- programming languages to IEC/EN 61131-3:
  * statement list (STL)
  * ladder diagram (LD)
  * function block diagram (FBD)
  * structured text (ST)
- multiple dialogue languages (German, English, French, Spanish)
- graphical topology configurator
- system requirements: Windows Vista or Windows 7

Dimensions and Weight

LxWxH: 620x350x450mm
Weight: approx. 15kg

Required for Operation

230V, 50/60Hz, 1 phase or 120V, 60Hz/CSA, 1 phase

Scope of Delivery

1 PLC Module
1 PLC software with programming cable
1 set of laboratory cables
1 set of instructional material

Order Details

058.13000 IA 130 PLC Module

G.U.N.T Gerätebau GmbH, Hanskampring 15-17, D-22885 Barsbüttel, Phone +49 (40) 67 08 54-0, Fax +49 (40) 67 08 54-42, E-mail sales@gunt.de, Web http://www.gunt.de
We reserve the right to modify our products without any notifications.

IA 110 Calibrating a Pressure Sensor

*** Test-pressure generated with dead-weight piston manometer**

*** Electronic pressure sensor with ceramic measuring cell**

*** Plotting a calibration curve**

*** Compact experimental unit for group working or demonstration**

Technical Description

The experimental unit IA 110 can be used to calibrate an electronic pressure sensor under practical conditions.

The test pressure is generated with a conventional piston manometer. The piston is loaded with weight rings and generates a defined test pressure $p = F_w/A_P$, where F_w is the force due to the weights and A_P is the cross-sectional area of the piston. A hand-operated spindle is used to relieve the pressure after measurement allowing the piston to return to a rest position. The influence of friction is minimised by rotating the piston during measurement. The test pressure generated in this way is applied to the diaphragm of a pressure sensor. The pressure-dependent electrical output signal is indicated on a digital display.

The pressure sensor used is a state-of-the-art ceramic measuring cell, in which strain-dependent piezo resistors are mounted on a ceramic diaphragm. The resistors are configured to form a measuring bridge. An integrated amplifier circuit evaluates the pressure-dependent detuning of the measuring bridge and outputs a proportional voltage signal.

The kit also includes a second pressure sensor in the form of a cutaway model for enhanced clarity. The entire experimental unit is contained in a compact housing, and is easy to handle.

The well-structured instructional material sets out the fundamentals and provides a step-by-step guide through the experiments.

Learning Objectives / Experiments

- familiarisation with, and carrying out of the calibration of an electronic pressure sensor
- plotting the sensor output signal dependent on the pressure applied
- familiarisation with the design and operation of a piezo-resistive electronic pressure sensor
- familiarisation with the installation and connection of the pressure sensor
- information on applications, measuring ranges and accuracies of typical electronic pressure sensors

IA 110 Calibrating a Pressure Sensor

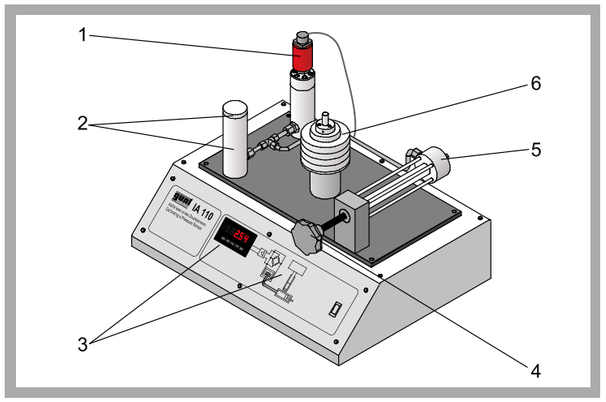

1 pressure sensor being calibrated, 2 cylinder with cover to receive the loading device, 3 digital display for displaying the output signal and process schematic, 4 manual adjustment spindle for compensating cylinder, 5 compensating cylinder, 6 holder for weight carrier with piston and weights

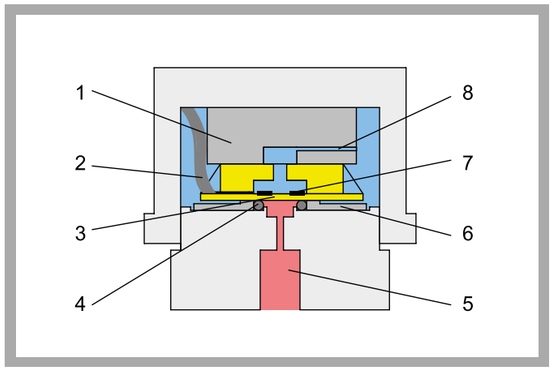

1 brace, 2 connecting cable, 3 ceramic measuring cell with diaphragm, 4 sealing ring, 5 pressure connection, 6 pressure plate, 7 piezo resistors, 8 pressure equalisation bore for relative pressure measurement

Interior layout of an electronic pressure sensor

Specification

[1] calibration unit with dead-weight piston manometer and hand-operated spindle
[2] electronic pressure sensor with ceramic measuring cell, integrated amplifier and voltage output
[3] digital display for output signal
[4] additional pressure sensor as cutaway model
[5] set of weights
[6] transmission medium: hydraulic oil
[7] process schematic on front panel

Technical Data

Pressure sensor
- measuring range: 0...2,5bar
- supply: 24VDC
- output signal: 0...10VDC

Piston manometer with pressure piston
- diameter: 12mm
- number of weights: 5
- pressure graduations: 0,5 - 1,0 - 1,5 - 2,0 - 2,5bar

Digital display: 4 1/2 digits

Hydraulic oil: HLP ISO 32

Dimensions and Weight

LxWxH: 600x450x450mm
Weight: approx. 20kg

Required for Operation

230V, 50/60Hz, 1 phase or 120V, 60Hz/CSA, 1 phase

Scope of Delivery

1 experimental unit
1 set of weights
1L hydraulic oil
1 cutaway model of pressure sensor
1 set of instructional material

Order Details

058.11000 IA 110 Calibrating a Pressure Sensor

G.U.N.T Gerätebau GmbH, Hanskampring 15-17, D-22885 Barsbüttel, Phone +49 (40) 67 08 54-0, Fax +49 (40) 67 08 54-42, E-mail sales@gunt.de, Web http://www.gunt.de
We reserve the right to modify our products without any notifications.

WL 201 Fundamentals of Humidity Measurement

*** Different measuring methods for measuring humidity**

*** Climatic chamber with adjustable humidity and transparent door**

Technical Description

The measurement of air humidity plays an important role in many branches of industry, e.g. during drying or in the air conditioning of buildings and vehicles. There are different measuring methods to determine humidity.

The trainer WL 201 enables the measurement of air humidity with four different instruments which can be directly compared to each other: two different hygrometers, a capacitive hygrometer and a psychrometer.

Psychrometers operate based on the principle of evaporation cooling and compare the ambient temperature with the wet bulb temperature to determine the humidity. Hygrometers utilise the property of specific fibres, e.g. hair, to expand with increasing air humidity. In the capacitive sensor the dielectricity constant of a layer and with it its capacity changes due to the water molecules absorbed.

The core element of the trainer is a climatic chamber with transparent door. This chamber can be humidified and dehumidified and contains the four instruments. A Peltier cooling element is used for dehumidification. An ultrasonic atomiser is used for humidification. To circulate the air and ensure good mixing a fan is used.

The well-structured instructional material sets out the fundamentals and provides a step-by-step guide through the experiments.

Learning Objectives / Experiments

- measuring methods for air humidity measurement
  * psychrometric humidity measurement
  * hygrometric humidity measurement
  * capacitive humidity measurement
- characteristic variables to describe air humidity
- changes of the state of humid air in the h-x diagram
- determination of the relative air humidity with
  * psychrometer
  * hair hygrometer
  * hygrometer with synthetic fibre
  * capacitive humidity sensor
- design and operation of the instruments
- comparison of the instruments

WL 201 Fundamentals of Humidity Measurement

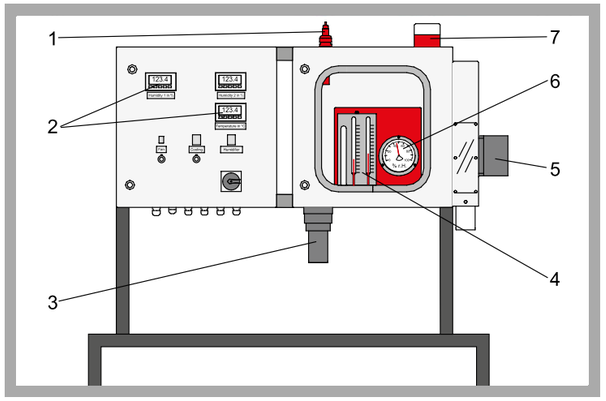

1 capacitive humidity sensor, 2 temperature and humidity displays, 3 humidifier, 4 psychrometer, 5 dehumidifier, 6 hair hygrometer, 7 hygrometer with synthetic fibre and combined temperature sensor

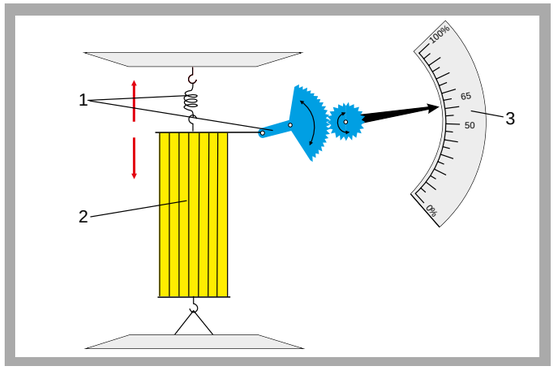

Principle of the hair hygrometer: 1 mechanism to measure the humidity-dependent change in length of the hair bundle, 2 hair bundle, 3 humidity scale

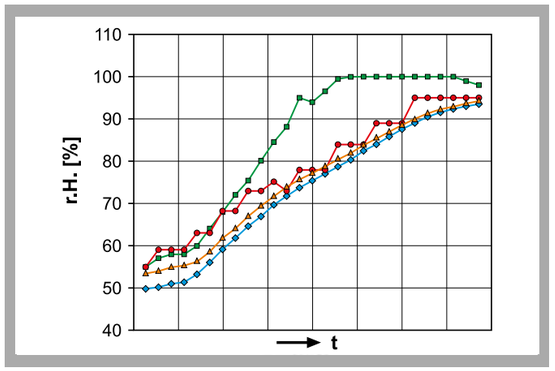

Relative humidity (r. h.) over time (t) with rising content of humidity; blue: capacitive sensor, orange: hygrometer with synthetic fibre, red: psychrometer, green: hair hygrometer

Specification

[1] different measuring methods for measuring humidity
[2] climatic chamber with adjustable humidity and transparent door
[3] humidification via ultrasonic atomiser
[4] dehumidification via Peltier cooling element
[5] fan for air recirculation
[6] 2 mechanical instruments: psychrometer, hair hygrometer
[7] 2 electronic instruments: capacitive sensor, hygrometer with synthetic fibre and combined temperature sensor

Technical Data

Humidifier
- ultrasonic atomiser
- power consumption: 21,6W
- low water cut-off

Dehumidifier
- Peltier element
  cooling capacity: 56,6W (50°C ambient temperature)
  cooling surface: 1600mm²

Hair hygrometer with deflective needle
- measuring range: 0...100% r. h.

Hygrometer with synthetic fibre
- output voltage: 0...10V
- measuring ranges: 0...100% r. h. / -30...80°C

Capacitive sensor with digital display
- output voltage: 0...10V
- measuring range: 1...100% r. h.

Psychrometer with thermometer
- measuring range: -10...60°C, graduation: 0,5°C

Dimensions and Weight

LxWxH: 1270x730x1630mm
Weight: approx. 112kg

Required for Operation

230V, 50/60Hz, 1 phase

Scope of Delivery

1 trainer
1 psychrometer
2 hygrometers
1 set of instructional material

Order Details

060.20100 WL 201 Fundamentals of Humidity Measurement

G.U.N.T Gerätebau GmbH, Hanskampring 15-17, D-22885 Barsbüttel, Phone +49 (40) 67 08 54-0, Fax +49 (40) 67 08 54-42, E-mail sales@gunt.de, Web http://www.gunt.de
We reserve the right to modify our products without any notifications.

WL 202 Fundamentals of Temperature Measurement

*** Experimental introduction to temperature measurement: methods, areas of application, characteristics**

*** Clearly laid out unit primarily for laboratory experiments, also suitable for demonstration purposes**

Technical Description

Recording temperature is one of the basic tasks in metrology. Electric temperature sensors are the most widely used in automation applications but conventional thermometer types are still widely applied in many areas. The WL 202 experimental set-up covers the full range of temperature measurement methods. As well as non-electrical measuring methods, such as gas- and liquid-filled thermometers and bimetallic thermometers, all typical electric measuring methods are covered in the experiments. The electrically measured temperatures are displayed directly on programmable digital displays. A temperature-proportionate output voltage signal (0...10V) is accessible from lab jacks, enabling temperature characteristics to be recorded with, for example, a plotter. For measuring the relative air humidity a psychrometer with two thermometers is available, one of the thermometers measures the dry bulb. The wet bulb thermometer is covered in a wet cotton cloth and measures the evaporative cooling. The temperature difference allows the relative air humidity to be determined.

A digital multimeter with precision resistors is used to calibrate the electrical measuring devices. Various heat sources or storage units (immersion heater, vacuum flask and laboratory heater) permit relevant temperature ranges to be achieved for the sensors being tested. A tool box houses the sensors, cables, temperature measuring strips and immersion heater.

The well-structured instructional material sets out the fundamentals and provides a step-by-step guide through the experiments.

Learning Objectives / Experiments

- learning the fundamentals of temperature measurement by experimentation
- familiarisation with the various methods, their areas of application and special features
  - * non-electrical methods: gas- and liquid-filled thermometers, bimetallic thermometers and temperature measuring strips
  - * electric methods: thermocouple, resistance temperature detector Pt100, thermistor (NTC)
- determining air humidity with a psychrometer
- calibrating electric temperature sensors

We reserve the right to modify our products without any notifications.

WL 202 Fundamentals of Temperature Measurement

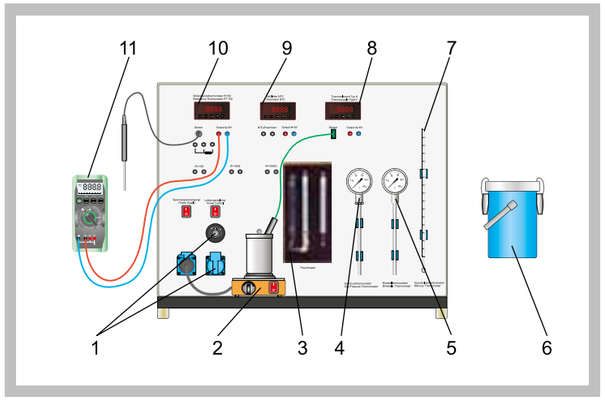

1 power-regulated socket, 2 laboratory heater for water and sand, 3 psychrometer to determine air humidity, 4 gas pressure thermometer, 5 bimetal thermometer, 6 vacuum flask, 7 mercury thermometer, 8 digital display, thermocouple type K, 9 digital display, thermistor (NTC), 10 digital display, Pt100, 11 multimeter

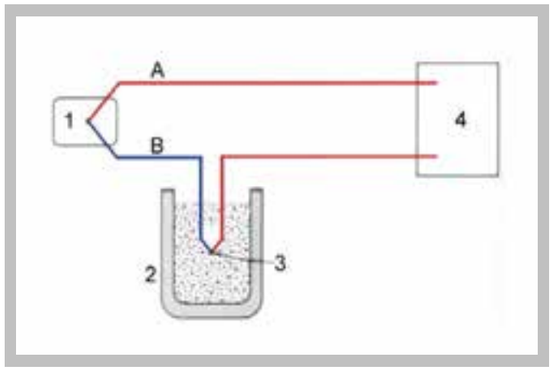

Temperature measurement with a thermocouple type K: A) nickel chrome, B) nickel; 1 measuring point, 2 tank at constant temperature, 3 reference point, 4 voltmeter

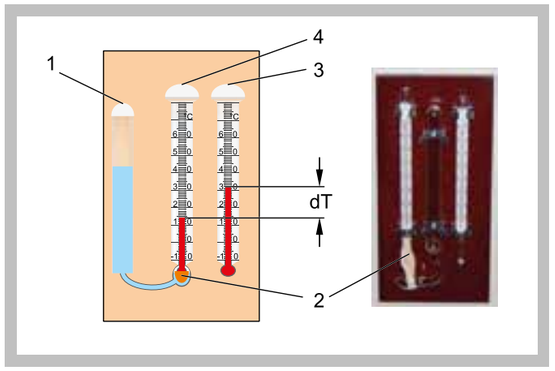

Psychrometer: 1 water tank, 2 wet cotton cloth for covering the wet bulb thermometer, 3 dry bulb thermometer, 4 wet bulb thermometer; dT temperature difference

Specification

[1] experiments in the fundamentals of temperature measurement with 7 typical measuring devices
[2] various heat sources or storage units: laboratory heater, immersion heater, vacuum flask
[3] calibration units: precision resistors and digital multimeter
[4] mercury, bimetallic and gas pressure thermometers
[5] temperature sensors: Pt100, thermocouple type K, thermistor (NTC)
[6] various temperature measuring strips
[7] psychrometer for humidity measurement
[8] tool box for sensors, cables, measuring strips and immersion heater

Technical Data

Immersion heater
- power output: 300W
- adjustment of power feed via power-regulated socket

Laboratory heater with thermostat
- power output: 450W
- max. temperature: 425°C

Vacuum flask: 1L

Measuring ranges
- resistance temperature detector Pt100: 0...100°C
- thermocouple type K: 0...1000°C
- thermistor (NTC): 20...55°C
- mercury thermometer: -10...300°C
- bimetallic, gas pressure thermometer: 0...200°C
- temperature measuring strips: 29...290°C

Precision resistors: 10Ω, 100Ω, 1000Ω
Psychrometer:
- 2x temperature: 0...60°C
- rel. humidity: 3...96%

Dimensions and Weight

LxWxH: 800x450x650mm (experimental unit)
Weight: approx. 45kg

Required for Operation

230V, 50/60Hz, 1 phase or 120V, 60Hz/CSA, 1 phase

Scope of Delivery

1 experimental unit
1 tool box
1 set of cables
1 laboratory heater
1 immersion heater
1 vacuum flask
1 digital multimeter
1 set of instructional material

Order Details

060.20200 WL 202 Fundamentals of Temperature Measurement

G.U.N.T Gerätebau GmbH, Hanskampring 15-17, D-22885 Barsbüttel, Phone +49 (40) 67 08 54-0, Fax +49 (40) 67 08 54-42, E-mail sales@gunt.de, Web http://www.gunt.de
We reserve the right to modify our products without any notifications.

WL 203 Fundamentals of Pressure Measurement

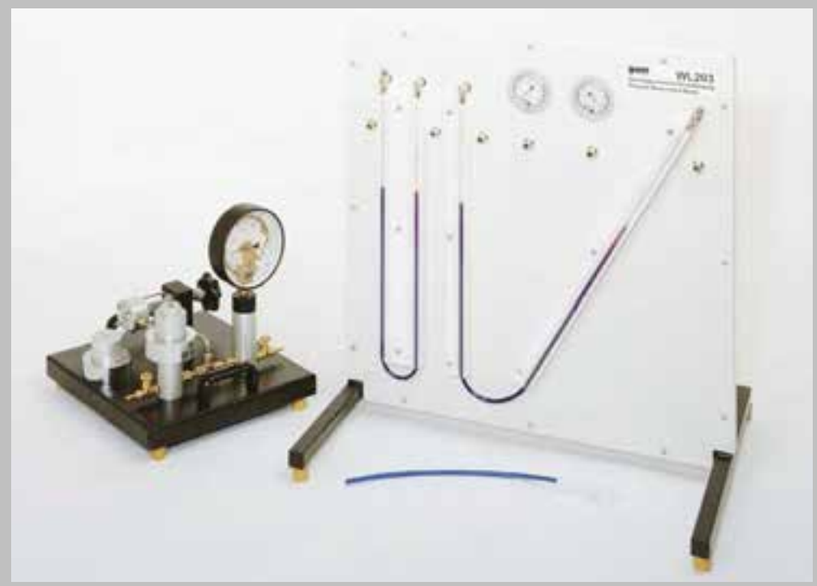

The illustration shows WL 203 in conjunction with HM 150.02 Calibration of Pressure Gauges

*** Comparison of different pressure measurement methods**

*** Measuring positive and negative pressure**

*** Calibration device included in the scope of delivery**

Technical Description

Measuring pressure is important in the engineering industry, e.g. in plant, turbomachine and aircraft construction and in process engineering. Other fundamental factors such as flow rate or flow velocity can also be determined based on a pressure measurement.

The WL 203 experimental unit enables the user to measure the pressure with two different measuring methods: directly by measuring the length of a liquid column (U-tube manometer, inclined tube manometer) and indirectly by measuring the change of shape of a Bourdon tube (Bourdon tube pressure gauge).

In a U-tube manometer, the pressure causes the liquid column to move. The pressure difference is read directly from a scale and is the measure for the applied pressure. In inclined tube manometers, one leg points diagonally up. A small height difference therefore changes the length of the liquid column significantly.

The principle of the Bourdon tube pressure gauge is based on the change in cross-section of the bent Bourdon tube under pressure. This change in cross-section leads to an expansion of the Bourdon tube diameter. A Bourdon tube pressure gauge is therefore an indirectly acting pressure gauge where the pressure differential is indicated via a transmission gearing and a pointer.

In experiments, pressures in the millibar range are generated with a plastic syringe and displayed on the manometers. The experimental unit is equipped with two Bourdon tube pressure gauges for measuring positive and negative pressure. The U-tube manometer, inclined tube manometer and Bourdon tube pressure gauges at the experimental unit can be combined using tubes. A calibration device (HM 150.02), which is included in the scope of delivery, enables calibration of an additional Bourdon tube pressure gauge using a weight-loaded piston manometer.

The well-structured instructional material sets out the fundamentals and provides a step-by-step guide through the experiments.

Learning Objectives / Experiments

- familiarisation with 2 different measuring methods:
  - * direct method with U-tube manometer and inclined tube manometer
  - * indirect method with Bourdon tube pressure gauge
- principle of a Bourdon tube pressure gauge

in conjunction with the HM 150.02 calibration device included in the scope of delivery
- calibrating mechanical manometers

WL 203 Fundamentals of Pressure Measurement

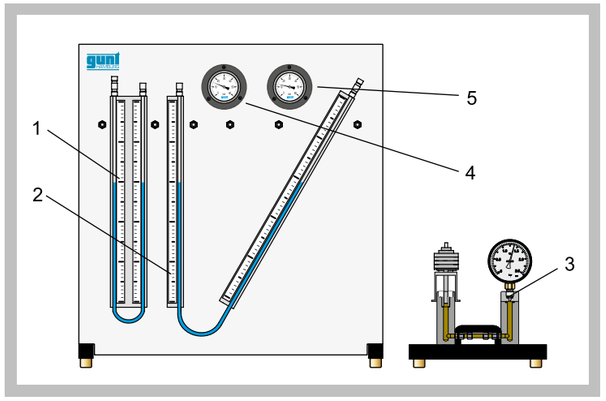

1 U-tube manometer, 2 inclined tube manometer, 3 HM 150.02 with Bourdon tube pressure gauge, 4 Bourdon tube pressure gauge for positive pressure, 5 Bourdon tube pressure gauge for negative pressure

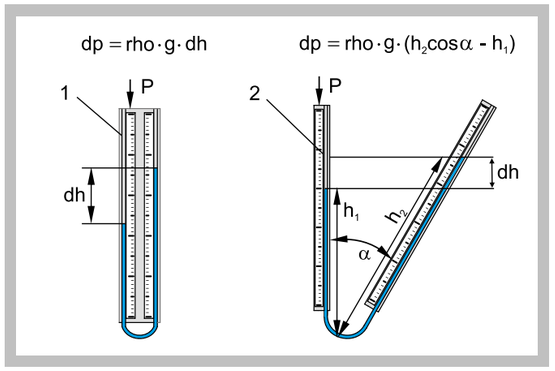

Principle of operation of liquid column manometers
1 U-tube manometer, 2 inclined tube manometer; dp pressure difference, dh height difference, rho density of measuring fluid, g acceleration of gravity

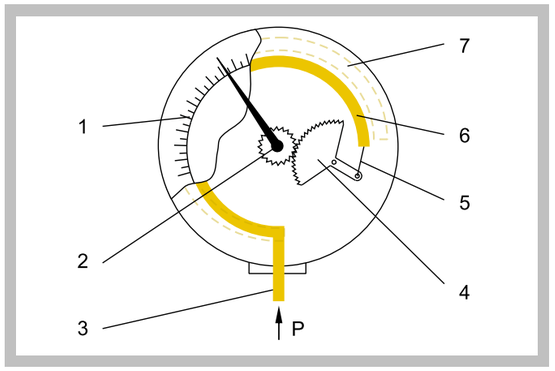

Principle of operation of a Bourdon tube pressure gauge
1 scale, 2 pointer, 3 Bourdon tube fixed in place, 4 gearing, 5 tie rod, 6 Bourdon tube without pressure, 7 Bourdon tube expanded under pressure

Specification

[1] basic experiments for measuring pressure with three different measuring instruments
[2] U-tube and inclined tube manometer
[3] one Bourdon tube pressure gauge each for positive and negative pressure
[4] plastic syringe generates test pressures in the millibar range
[5] calibration device with Bourdon tube pressure gauge (HM 150.02) for calibrating mechanical manometers included in the scope of delivery

Technical Data

Inclined tube manometer: angle 30°

Measuring ranges
- Bourdon tube pressure gauge: 0...60mbar / -60...0mbar
- U-tube manometer: 0...500mmWC
- inclined tube manometer: 0...500mmWC

Dimensions and Weight

LxWxH: 750x610x780mm
Weight: approx. 23kg
LxWxH: 400x400x400mm (HM 150.02)
Weight: approx. 25kg (HM 150.02)

Scope of Delivery

1 experimental unit
1 HM 150.02 Calibration of Pressure Gauges
30mL ink
1 funnel
1 plastic syringe
1 set of hoses
1 set of instructional material

Order Details

060.20300 WL 203 Fundamentals of Pressure Measurement

G.U.N.T Gerätebau GmbH, Hanskampring 15-17, D-22885 Barsbüttel, Phone +49 (40) 67 08 54-0, Fax +49 (40) 67 08 54-42, E-mail sales@gunt.de, Web http://www.gunt.de
We reserve the right to modify our products without any notifications.

HM 500 + ACCESSOIRES METHODS OF FLOW RATE MEASUREMENT

Properties and applications of different flow meters

The extensive range of accessories for the HM 500 trainer offers the opportunity to learn about many different types of flow meter. They can be quickly and easily installed in the HM 500 trainer.

The specific applications for which each flow meter is suitable can be established. The medium being transported and the accuracy demands imposed, as well as commercial considerations associated with the particular application, are the key criteria in flow meter selection. Knowledge of the pressure losses associated with the various meters is also important in this context. Consequently, each accessory flow meter for the HM 500 trainer is equipped with connections for measurement of pressure loss. The flow meters are connected to the trainer by hoses. The pressure losses are displayed on the trainer.

The instructional material details the principle of operation the flow meter concerned. The theory underlying the principle of operation is outlined. With this information the accuracy associated with the measurement principle and the subsequent applications for which the flow meter is suitable can be easily established.

Some of the flow meters, such as the paddle wheel flow meter, require auxiliary power in order to operate. The trainer supplies this auxiliary power in the form of DC voltage.

HM 500.01 *Rotameter*

Product no. 070.50001

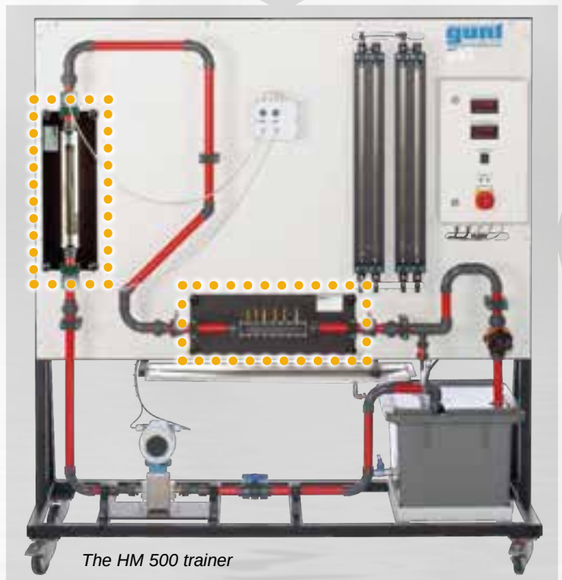

The HM 500 trainer

HM 500.06 *Venturi Nozzle*

Product no. 070.50006

HM 500.05 *Ultrasonic Flow Meter*

Product no. 070.50005

HM 500.07 *Pitot Tube*

Product no. 070.50007

HM 500.08 *Orifice Plate Flow Meter*

Product no. 070.50008

HM 500.09 *Measuring Nozzle*

Product no. 070.50009

HM 500.10 *Paddle Wheel Flow Meter*

Product no. 070.50010

HM 500.13 *Orifice Plate Flow Meter with Transducer*

Product no. 070.50013

HM 500.16 *Baffle Plate Flow Meter*

Product no. 070.50016

HM 500.04 *Electromagnetic Flow Meter*

Product no. 070.50004

HM 500.11 *Vortex Flow Meter*

Product no. 070.50011

ALSO AVAILABLE:

HM 500.03 *Rotameter with Transducer*
Product no. 070.50003

HM 500.14 *Turbine Wheel Flow Meter*
Product no. 070.50014

HM 500.15 *Bypass Flow Meter*
Product no. 070.50015

HM 500 Flow Meter Trainer

*** Comparison and calibration of different flow meters**

*** Plotting of pressure loss curves**

*** Numerous flow meters available as accessories**

Technical Description

Flow measurement plays a key role in many process engineering systems. Different flow meters are used for this, depending on the medium and application.

The HM 500 trainer is used to examine different principles of operation of flow meters. The flow meters are available as accessories (HM 500.01-HM 500.16). Pressure loss curves and accuracies can be compared to determine which flow meter is suitable for which area of application.

One horizontally or vertically installed flow meter can be operated in a closed water circuit. The flow rate can be adjusted via a valve. A high-precision electromagnetic flow rate sensor is available as a reference for calibrating the flow meters.

To be able to determine the pressure losses of the various flow meters, the trainer is equipped with two twin tube manometers and a differential pressure sensor. A DC voltage source ensures the power supply to the flow meters if required.

The well-structured instructional material sets out the fundamentals and provides a step-by-step guide through the experiments.

Learning Objectives / Experiments

together with different flow meters available as accessories
- different flow meters and their principles of operation
- calibration of different flow meters
- position dependency of flow meters
- plotting and comparison of pressure loss curves

HM 500 Flow Meter Trainer

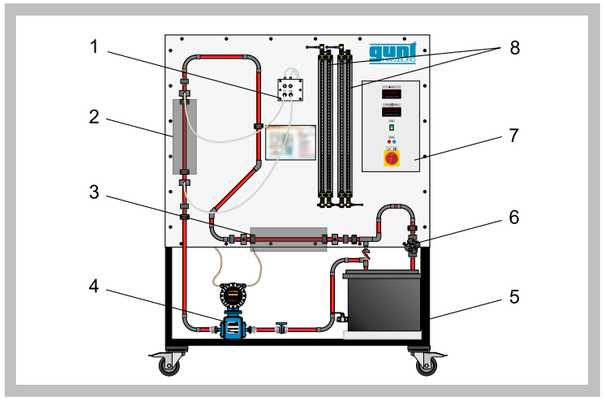

1 differential pressure sensor, 2 vertical measuring location with HM 500.10, 3 horizontal measuring location with empty tube, 4 electromagnetic flow rate sensor, 5 tank with pump, 6 valve to adjust flow rate, 7 switch cabinet, 8 twin tube manometers

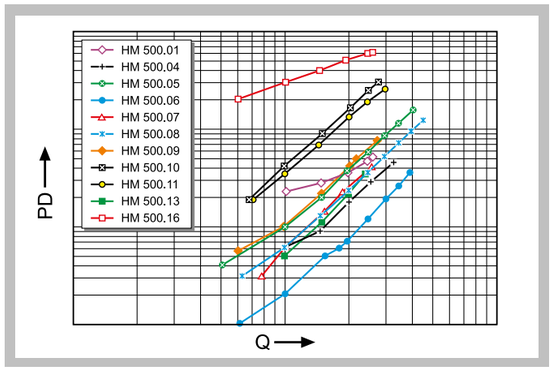

Pressure loss (PD) dependent on the flow rate (Q) for the flow meters available as accessories

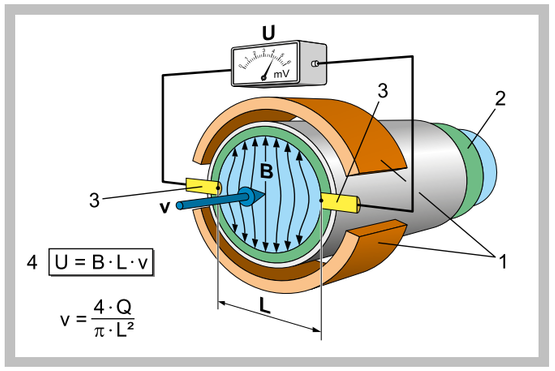

Measurement principle of the electromagnetic flow rate sensor:
1 magnet, 2 insulation, 3 electrode, 4 Faraday's Law of Induction;
B magnetic flux density, L electrode gap, Q flow rate, U induced voltage,
v flow velocity of medium (blue)

Specification

[1] comparison and calibration of different flow meters
[2] water circuit with tank, pump and valve to adjust flow rate
[3] 2 measuring locations for vertical or horizontal installation of the flow meters under test
[4] electromagnetic flow rate sensor for reference measurement
[5] 1 differential pressure sensor and twin tube manometers for measurement of pressure losses
[6] DC voltage source to supply the flow meters with auxiliary power
[7] flow meters available as accessories

Technical Data

Tank: approx. 55L
Pump
- max. flow rate: approx. 225L/min
- max. head: approx. 11m

DC voltage source
- voltage: 24VDC
- current: 2,0A

Accuracy of electromagnetic flow rate sensor
- 0.5% of final value

Measuring ranges
- flow rate (reference): 0...4760L/h
- differential pressure sensor: 0...2bar
- twin tube manometers: 0...680mmWC

Dimensions and Weight

LxWxH: 1770x670x1880mm
Weight: approx. 110kg

Required for Operation

230V, 50/60Hz, 1 phase or 120V, 60Hz/CSA, 1 phase

Scope of Delivery

1 trainer
1 set of hoses
1 set of cables
1 set of instructional material

Order Details

070.50000 HM 500 Flow Meter Trainer

G.U.N.T Gerätebau GmbH, Hanskampring 15-17, D-22885 Barsbüttel, Phone +49 (40) 67 08 54-0, Fax +49 (40) 67 08 54-42, E-mail sales@gunt.de, Web http://www.gunt.de
We reserve the right to modify our products without any notifications.

2 PRACTICAL FUNDAMENTALS

INTRODUCTION

Overview	The Practical Fundamentals of Process Engineering	112

TANKS AND MATERIALS

FL 130	Stress and Strain Analysis on a Thin-Walled Cylinder	114
FL 140	Stress and Strain Analysis on a Thick-Walled Cylinder	116
FL 151	Multi-Channel Measuring Amplifier	118
CE 105	Corrosion Experimental Unit	120

PUMPS AND COMPRESSORS

Overview	Pumps and Compressors: Indispensable in Process Engineering	122
Overview	Supply Unit for Pumps in Process Engineering	124
HM 365.11	Standard Centrifugal Pump	125
HM 365.14	Centrifugal Pumps: Series and Parallel Connected	125
HM 365.15	Side Channel Pump	125
HM 365.17	Reciprocating Piston Pump	125
HM 365.10	Supply Unit for Water Pumps	126
HM 365	Universal Drive and Brake Unit	128
MT 180	Assembly & Maintenance Exercise: Centrifugal Pump	130
MT 181	Assembly & Maintenance Exercise: Multi-Stage Centrifugal Pump	132
MT 182	Assembly & Maintenance Exercise: Screw Pump	134
MT 183	Assembly & Maintenance Exercise: Diaphragm Pump	136
MT 184	Assembly & Maintenance Exercise: Piston Pump	138
MT 185	Assembly & Maintenance Exercise: In-Line Centrifugal Pump	140
MT 186	Assembly & Maintenance Exercise: Gear Pump	142
HL 960.01	Assembly and Alignment of Pumps and Drives	144
CE 271	Multi-Head Diaphragm Pump	146
CE 272	Rotary Vane Vacuum Pump	148
ET 500	Two-Stage Piston Compressor	150
MT 140.02	Assembly Exercise: Piston Compressor	152
MT 140.01	Assembly Exercise Piston Compressor: Functional Test	154

PIPING ELEMENTS, VALVES AND FITTINGS

Overview	Valves and Fittings: Important Elements in Pipelines	156
Overview	Cutaway Models of Original Piping Components	158
HM 700.03	Cutaway Model: Standard Venturi Meter	158
HM 700.04	Cutaway Model: Straight-Way Valve	158
HM 700.01	Cutaway Model: Standard Orifice Plate	159
HM 700.02	Cutaway Model: Flow Nozzle	159
HM 700.05	Cutaway Model: Corner Valve	159
HM 700.06	Cutaway Model: Angle Seat Valve	159
HM 700.07	Cutaway Model: Non-Return Valve	159
HM 700.08	Cutaway Model: Pressure Reducing Valve	159
HM 700.09	Cutaway Model: Strainer	159
HM 700.10	Cutaway Model: Gate Valve	159
HM 700.11	Cutaway Model: Straight-Way Plug Valve	159
HM 700.12	Cutaway Model: 3-Way Plug Valve	159
HM 700.13	Cutaway Model: Ball Valve	159
HM 700.14	Cutaway Model: Safety Valve	159
HM 700.15	Cutaway Models: Various Screwed Pipe Connections	159
Overview	Cutaway Models from Process Engineering	160
VS 102	Cutaway Model: Resilient Seated Gate Valve	161
VS 103	Cutaway Model: Screw Down Valve	161
VS 104	Cutaway Model: Changeover Valve	161
VS 106	Cutaway Model: Backflow Preventer	161
VS 107	Cutaway Model: Non-Return Butterfly Valve	161
VS 109	Cutaway Model: Strainer	161
MT 156	Assembly Exercise: Wedge Gate Valve and Angle Seat Valve	162
MT 157	Assembly Exercise: Butterfly Valve and Non-Return Valve	164
MT 158	Assembly Exercise: Ball Valve and Shut-off Valve	166
MT 162	Hydraulic Valves and Fittings Test Stand	168
HL 960	Assembly Station: Pipes and Valves and Fittings	170
HL 960.01	Assembly and Alignment of Pumps and Drives	172
RT 395	Maintenance of Valves and Fittings and Actuators	174
RT 396	Pump and Valves and Fittings Test Stand	176
Overview	HL 962 Assembly and Maintenance Exercises: Pipes, Fittings, Pumps	178
HL 962	Assembly Stand for Pumps	180
HL 962.01	Standard Chemicals Pump	182
HL 962.02	Canned Motor Pump	183
HL 962.03	Side Channel Pump	184
HL 962.04	Standard Chemicals Pump with Magnetic Clutch	185
HL 962.30	Tank System	186

HEAT EXCHANGERS AND STEAM GENERATORS

WL 315C	Trainer for Various Heat Exchangers	188
ET 860	Safety Devices on Steam Boilers	190

APPLICATIONS OF CONTROL ENGINEERING

Overview	Control Engineering in Practice	192
Overview	RT 310 Working with the Calibration Station	194
RT 310	Calibration Station	196
Overview	RT 512 – RT 552: Process Control Training Rigs with Process Control System	200
RT 512	Level Control Trainer	202
RT 522	Flow Control Trainer	204
RT 532	Pressure Control Trainer	206
RT 542	Temperature Control Trainer	208
RT 552	pH Value Control Trainer	210
RT 650.50	Process Control Software for RT 512 – RT 552 Series	212
RT 586	Control of Water Quality	214
RT 580	Fault Finding in Control Systems	216
RT 681	Multivariable Control: Vacuum Degassing	218
RT 682	Multivariable Control: Stirred Tank	220
RT 650.60	Process Control Software for RT 681 and RT 682	222

Visit our website www.gunt.de

THE PRACTICAL FUNDAMENTALS OF PROCESS ENGINEERING

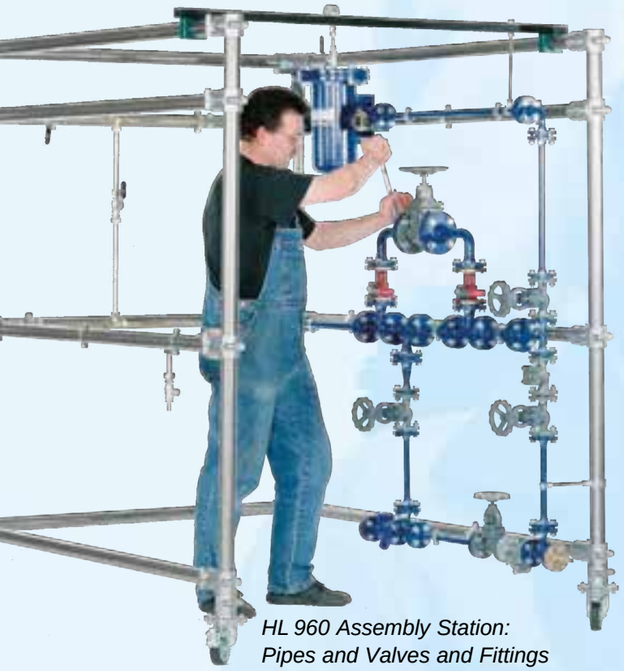

HL 960 Assembly Station: Pipes and Valves and Fittings

Process engineering systems consist of many different components. The properties of the real components should already be taken into consideration during the development and design of a system. On the one hand, this ensures optimal implementation of the theoretically calculated factors. On the other hand, it ensures trouble-free operation and ease of maintenance and repair.

TANKS AND MATERIALS

Tanks are key components of every process engineering system. Whether it is solids, liquids or gases: the reactants, products and intermediate products of a process must be stored safely. The principal stresses in the material are decisive factors for the calculation and design of steam boilers, pressure vessels and pipelines. The experimental units presented in this chapter enable students get hands-on experience of the established calculation methods.

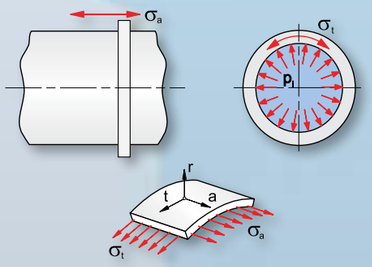

Stresses in tanks

PUMPS AND COMPRESSORS

Pumps and compressors are the heart of every process engineering system. They convey the media or generate the pressures required for the respective process. Various principles of operation are used in this process, depending on the application and the medium. To be able to select these components correctly, the user has to know their characteristics.

In the worst case, an unexpected failure of pumps and compressors may result in a standstill of the entire process engineering system. It is therefore essential that these components are serviced and maintained by qualified experts.

MT 181 Assembly & Maintenance Exercise: Multi-Stage Centrifugal Pump

PIPING ELEMENTS, VALVES AND FITTINGS

The transportation of substances involved in process engineering often takes place through pipelines. The correct installation of piping elements, valves and fittings requires knowledge about the way different connecting elements like flanges or compression type fittings work. In addition, practical experience is also essential in order to establish leak-tight connections. Valves and fittings with different functions are suitable for different applications. Shut-off devices can, for example, be selected based on properties such as adjustment characteristics and pressure loss. Among other things, this chapter contains sectional models that demonstrate the mode of operation of various valves and fittings. In addition, more trainers enable intensive examination of the valves and fittings during operation.

VS 103 Cutaway Model: Screw Down Valve

MT 157 Assembly Exercise: Butterfly Valve and Non-Return Valve

HEAT EXCHANGERS AND STEAM GENERATORS

Whether for evaporation, condensation, preheating, cooling or controlling the temperature of reactors: heat exchangers serve numerous purposes in process engineering. Depending on the application, used media and their aggregate states, different types of heat exchangers are used, e.g. plate or shell & tube heat exchangers. Many processes, especially in thermal process engineering, require steam. Information about the safe operation of steam generators is therefore also a key part of the process engineering curriculum.

WL 315C Trainer for Various Heat Exchangers

ET 860 Safety Devices on Steam Boilers

APPLICATIONS OF CONTROL ENGINEERING

There are numerous control engineering tasks in process engineering systems. Knowledge of the control response of industrial components is extremely important when developing and planning such systems. Often several controlled variables affect each other and the behaviour of real controlled systems differs from the simple theoretical fundamentals. Operation, installation, maintenance and repair of process engineering systems also requires comprehensive control engineering skills. This chapter therefore presents trainers to familiarise students with real components such as controllers, control valves and sensors. The interaction of these components can also be examined using typical process engineering tasks.

RT 682 Multivariable Control: Stirred Tank

FL 130 Stress and Strain Analysis on a Thin-Walled Cylinder

*** Strains in a thin cylinder under internal pressure**

*** Cylinder with strain gauge application as vessel**

*** Uniaxial or biaxial stress state represented in the experiment**

*** Determination of axial and circumferential stress from measured strains**

Technical Description

The findings obtained from the experiments using FL 130 demonstrate the calculation and design methods for pipes and pressure vessels commonly applied in practice. The principal stresses are key variables in calculating and designing steam tanks, pressure vessels and pipes.

The stresses and strains occurring in a vessel are not measured directly, but are determined by measuring the strains on the surface using strain gauges.

The FL 130 experimental unit is used to investigate stresses and strains in a thin-walled cylinder subjected to internal pressure. The oil-filled cylinder is closed at one end and a movable piston at the other end. This conveniently permits the unit to be either open or closed ended. A handwheel with a threaded spindle is used to move the piston. Two load cases are represented: biaxial stress state of a closed cylinder, such as a boiler tank, and uniaxial stress state of an open vessel, such as a pipe.

Internal pressure is generated inside the cylinder by a hydraulic cylinder and a hydraulic pump. A pressure gauge indicates the internal pressure. Strain gauges are attached to the surface of the cylinder to record the strains. The measuring amplifier FL 151 gives a direct readout of the measured strains. To assist and visualise evaluation of the experiment, the measurement data can be imported into the application software.

Mohr's Circle for stress and strain analysis is used to represent the conversion of the strain graphically and determine the principal strains.

The principal stresses are calculated from the principal strains by applying the appropriate equations of elasticity.

The well-structured instructional material sets out the fundamentals and provides a step-by-step guide through the experiments.

Learning Objectives / Experiments

- measurement of strain using strain gauges
- application of Mohr's Circle for stress and strain analysis, determination of the principal strains
- determination of the principal stresses: Axial and circumferential stresses in magnitude and direction
  * on an open vessel (pipe)
  * on a closed vessel (boiler tank)
- comparison of open / closed vessels
- determination of the Poissons ratio
- investigation of correlations between strain, pressure and stress in the plane biaxial stress state

FL 130 Stress and Strain Analysis on a Thin-Walled Cylinder

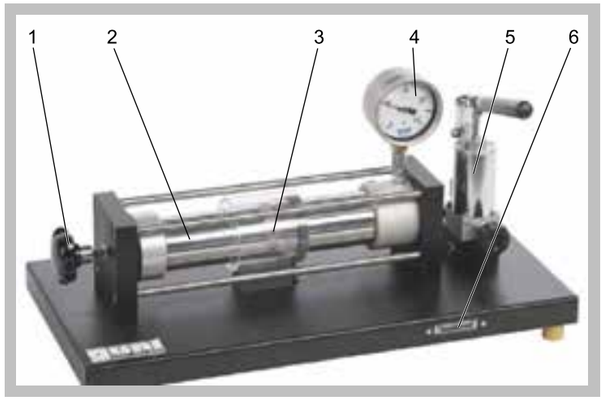

1 handwheel for piston adjustment, 2 cylinder, 3 strain gauge measuring point, 4 pressure gauge, 5 hydraulic cylinder with hydraulic pump, 6 connection for measuring amplifier FL 151

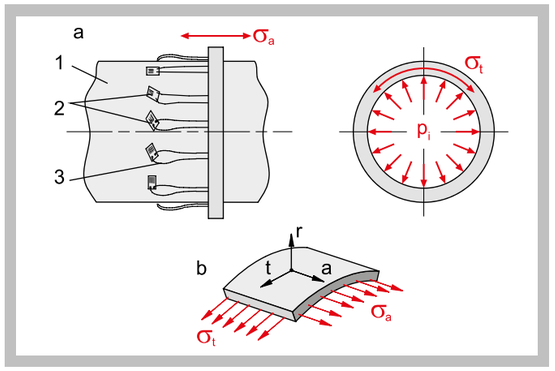

a) strain gauge layout on the cylinder: 1 cylinder, 2 strain gauge measuring points, 3 wiring; σ_a stress in direction of cylinder axis, σ_t stress in circumferential direction, p_i internal pressure; b) plane stress state in the wall: a axial direction, t circumferential direction, r radial direction

Screenshot from FL 151 software: Mohr's Circle

Specification

[1] investigation of the stresses and strains in a thin-walled cylinder under internal pressure
[2] cylinder usable as open pipe or as closed tank
[3] strain gauge application on cylinder surface at various angles
[4] hydraulic cylinder with hydraulic pump to generate pressure
[5] hermetically sealed hydraulic system, maintenance-free
[6] multi-pin connector for measuring amplifier FL 151 provided

Technical Data

Aluminium cylinder
- length: 400mm
- diameter: d=75mm
- wall thickness: 2,8mm
- internal pressure: max. 3,5N/mm² (35bar)

Strain gauge application
- 5 strain gauges: half-bridges, 350 Ohm
- angle to vessel axis: 0°, 30°, 45°, 60°, 90°
- gauge factor: 2,00 +/-1%
- supply voltage: 10V

Pressure gauge
- 0...40bar, accuracy: class 1,0

Dimensions and Weight

LxWxH: 700x350x350mm
Weight: approx. 21kg

Scope of Delivery

1 experimental unit
1 set of instructional material

Order Details

021.13000 FL 130 Stress and Strain Analysis on a Thin-Walled Cylinder

G.U.N.T Gerätebau GmbH, Hanskampring 15-17, D-22885 Barsbüttel, Phone +49 (40) 67 08 54-0, Fax +49 (40) 67 08 54-42, E-mail sales@gunt.de, Web http://www.gunt.de
We reserve the right to modify our products without any notifications.

FL 140 Stress and Strain Analysis on a Thick-Walled Cylinder

*** Direct stresses and strains of a thick cylinder under internal pressure**

*** Thick-walled, two-part cylinder as vessel**

*** Cylinder with strain gauge application on surface and in wall**

*** Triaxial stress state in cylinder wall**

Technical Description

In contrast to thin-walled vessels, when designing thick-walled vessels allowance must be made for an uneven distribution of stresses through the thickness of the wall. The stress state in a thick-walled vessel under internal pressure is triaxial. The direct stresses and strains occur: radial, circumferential, hoop and axial.

Since the stresses and strains occurring in a vessel are not measured directly, they are determined by measuring strains on the surface. Strain gauges are employed to record the strains electrically and the stresses and strains are determined from those measurements.

The FL 140 experimental unit is used to investigate direct stresses and strains occurring on a thick-walled cylinder subjected to internal pressure. The oil-filled cylinder is made up of two halves, and is sealed on both sides. Internal pressure is generated inside the vessel with a hydraulic cylinder and a hydraulic pump. A pressure gauge indicates the internal pressure. An eccentric groove is cut between the two halves of the cylinder, in which the strain gauges are mounted at various radial points. Additional strain gauges are mounted on the inner and outer surfaces of the cylinder. Radial, hoop and axial strains are measured, enabling the strain state to be fully recorded.

The measuring amplifier FL 151 displays the recorded signals as measured value readouts. To assist and visualise evaluation of the experiment, the measured values can be imported into the application software.

Mohr's Circle for stress and strain analysis is used to represent the triaxial stress state in the cylinder wall graphically. The direct stresses and strains are calculated from the measured strains, applying the appropriate equation of elasticity.

The well-structured instructional material sets out the fundamentals and provides a step-by-step guide through the experiments.

Learning Objectives / Experiments

- measurement of elongations by strain gauges
- application of Mohr's Circle for the triaxial stress state
- determination of the distribution of direct stress in
  * radial, tangential and axial direction
- investigation of correlations between elongation, pressure and stress in the triaxial stress state

FL 140 Stress and Strain Analysis on a Thick-Walled Cylinder

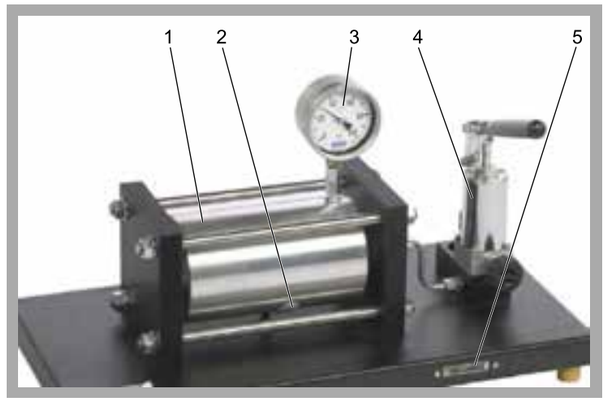

1 cylinder, 2 strain gauge measuring point, 3 pressure gauge, 4 hydraulic cylinder with hydraulic pump, 5 connection for measuring amplifier FL 151

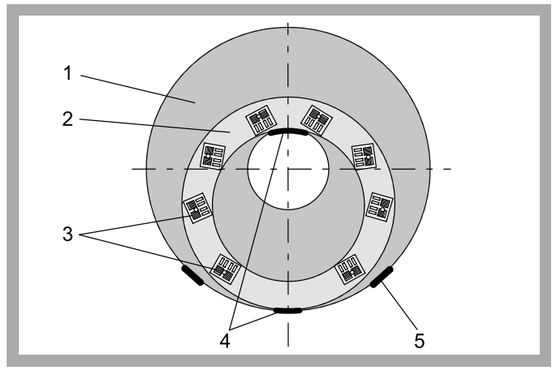

Strain gauge layout in cylinder wall and on the surface:
1 cylinder, 2 eccentric groove, 3 strain gauge measuring point, radial/hoop, 4 strain gauge measuring point, hoop, 5 strain gauge measuring point, axial

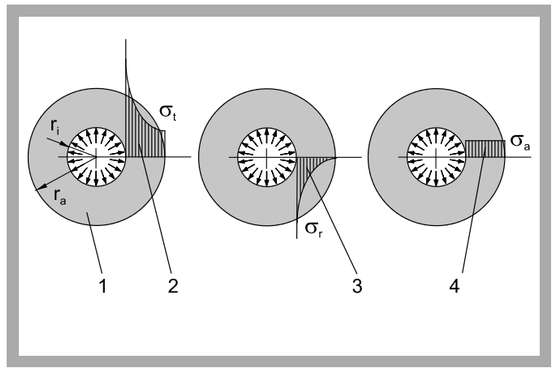

Distribution of stress in cylinder wall: 1 cylinder, r_i inner radius, r_a outer radius, 2 distribution of stress in hoop direction σ_t, 3 distribution of stress in radial direction σ_r, 4 distribution of stress in axial direction σ_a

Specification

[1] investigation of the stresses and strains in a thick-walled cylinder under internal pressure
[2] two-part cylinder with flat groove
[3] strain gauge application at various radial points in the groove and on the cylinder surface
[4] hydraulic cylinder with hydraulic pump to generate pressure
[5] hermetically sealed hydraulic system, maintenance-free
[6] multi-pin connector for measuring amplifier FL 151 provided

Technical Data

Aluminium cylinder
- length: 300mm
- diameter: d=140mm
- wall thickness: 50mm
- internal pressure: max. 7N/mm² (70bar)

Strain gauge application
- 11 strain gauges: half-bridges, 350Ohm
- gauge factor: 2,00 +/-1%
- supply voltage: 10V

Pressure gauge: 0...100bar, accuracy: class 1,0

Dimensions and Weight

LxWxH: 700x350x330mm
Weight: approx. 32kg

Scope of Delivery

1 experimental unit
1 set of instructional material

Order Details

021.14000 FL 140 Stress and Strain Analysis on a Thick-Walled Cylinder

G.U.N.T Gerätebau GmbH, Hanskampring 15-17, D-22885 Barsbüttel, Phone +49 (40) 67 08 54-0, Fax +49 (40) 67 08 54-42, E-mail sales@gunt.de, Web http://www.gunt.de
We reserve the right to modify our products without any notifications.

FL 151 Multi-Channel Measuring Amplifier

- **16 input channels for processing of analogue strain gauge measuring signals**
- **Measuring point extension to max. 32 input channels possible**
- **Easy strain gauge connection by multi-pin input port or single ports**
- **Suitable for computerised data acquisition**
- **Integrated software for experimental units FL 120, FL 130, FL 140**
- **Communication with computer via USB**

Technical Description

Stresses and strains occurring in components are determined in experimental stress and strain analysis by measuring strain. In industry, strain is often recorded by strain gauges. Since strain gauges deliver only small analogue measurement signals, the signals must be amplified in measuring amplifiers. Then they are converted into digital pulses and displayed as measured strain. These strains may also be evaluated and processed on computer.

FL 151 is a multi-channel measuring amplifier which supplies the strain gauge bridge circuits with power and processes the received measurement signals. The unit can only be operated with a computer. The measuring amplifier includes 16 input channels and, by using a measuring point add-on unit (FL 151.01), can be extended to a maximum of 32 input channels. The strain gauge measuring points are connected to associated balance potentiometers either by a 68-pin multiport or 16 (6-pin) single ports.

The multi-channel measuring amplifier is operated via USB using the supplied software. The measured values can be read and saved on computer (using an application such as MS Excel).

Learning Objectives / Experiments

- amplification and display of signals from strain gauge measuring points
- processing of measured values on computer
- evaluation of stress and strain analysis experiments, in conjunction with: FL 120, FL 130, FL 140
- evaluation of experiments relating to forces in trusses, in conjunction with: SE 130, SE 110.21, SE 110.22

FL 151 Multi-Channel Measuring Amplifier

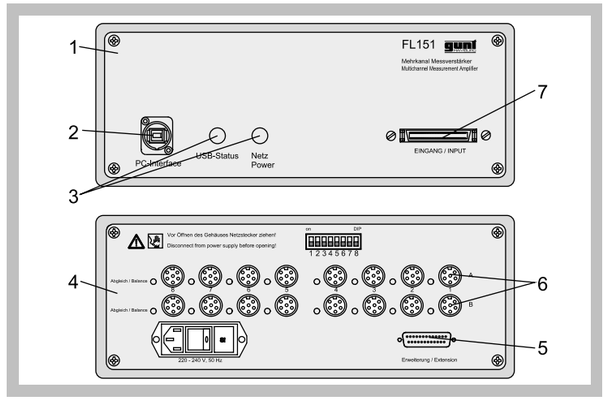

1 front view, 2 USB, 3 signal lamp, 4 rear view, 5 expansion port, 6 single ports for measurement sensors (6-pin), 7 multiport (68-pin)

Application software for stress and strain analysis based on the example of the FL 120

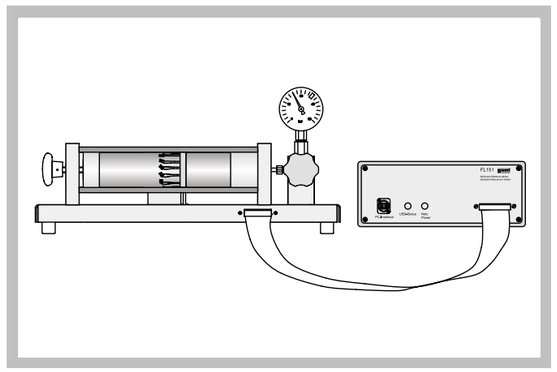

Example application: FL 151 in conjunction with FL 130 (stress and strain analysis on a thin-walled cylinder)

Specification

[1] multi-channel measuring amplifier for processing of strain gauge signals
[2] strain gauge connection in half or full bridge configuration
[3] strain gauge connection via 6-pin single ports or 68-pin multiports
[4] extension of measuring points possible with FL 151.01
[5] processing of measured values on a PC
[6] connection to the PC via USB
[7] integrated software for experimental units FL 120, FL 130, FL 140
[8] system requirement: Windows Vista or Windows 7

Technical Data

Amplifier
- number of input channels: 16
- with FL 151.01 measuring point add-on unit: max. 32 input channels

Strain gauge connection in half or full bridge configuration
- resistance: min. 350Ohm/strain gauge
- zero balancing: 20x spindle trimmer
- strain gauge supply voltage: +/-5VDC

Frequency range selectable via bridges
- 4Hz/500Hz (-3dB)

Input voltage: max. +/- 50mV

Dimensions and Weight

LxWxH: 370x315x160mm
Weight: approx. 7kg

Required for Operation

230V, 50/60Hz, 1 phase or 120V, 60Hz/CSA, 1 phase

Scope of Delivery

1 multi-channel measuring amplifier
1 software CD
1 USB cable
1 instruction manual

Order Details

021.15100 FL 151 Multi-Channel Measuring Amplifier

G.U.N.T Gerätebau GmbH, Hanskampring 15-17, D-22885 Barsbüttel, Phone +49 (40) 67 08 54-0, Fax +49 (40) 67 08 54-42, E-mail sales@gunt.de, Web http://www.gunt.de
We reserve the right to modify our products without any notifications.

CE 105 Corrosion Experimental Unit

*** Principles of corrosion and corrosion protection on metallic materials**

*** Oxygen corrosion**

*** Electrochemical corrosion (local elements)**

*** Corrosion protection with external voltage and sacrificial anodes**

Technical Description

Corrosion damage to metallic components causes considerable economic and technical damages. The issue of corrosion and corrosion protection therefore plays an important role in technical training.

The CE 105 allows a variety of factors that influence corrosion processes to be investigated in parallel. Eight glass vessels are available to do this. They allow different materials to be compared under different conditions. The required electrolyte solution is added to the vessels. Up to 6 specimens can be attached to the cover of each vessel and these are immersed in the solution. It is possible to connect specimens to an electrical conductor to investigate local elements and the principle of sacrificial anodes. An adjustable power pack allows an external voltage to be connected. This counters the current flow between precious and base metals in local elements. As result the corrosion rate of the more base metal is reduced.

A diaphragm pump conveys ambient air into the electrolyte solution as required. Flow control valves can be used to individually adjust the gas flow rate for each vessel. It is also possible to feed other gases provided by the laboratory into the electrolyte solution. A pH meter is included to allow the influence of the electrolyte solution on corrosion processes to be investigated and compared.

The well-structured instructional material sets out the fundamentals and provides a step-by-step guide through the experiments.

Learning Objectives / Experiments

Corrosion
- corrosion behaviour of different metallic materials (rust / passivation)
- formation of local elements
- influence of pH value of the electrolyte solution
- influence of salt concentration in the electrolyte solution
- oxygen corrosion

Corrosion protection
- external voltage
- sacrificial anodes
- protective layers

CE 105 Corrosion Experimental Unit

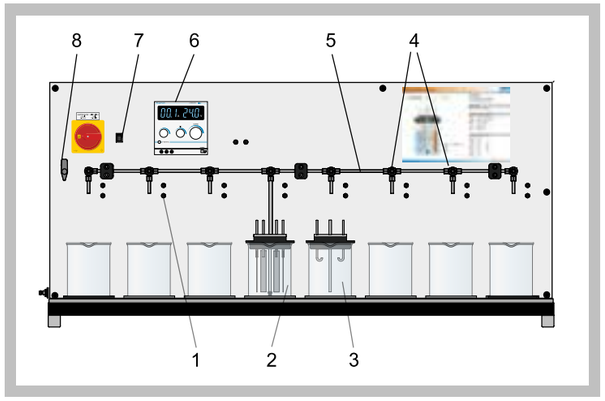

1 electrical connecting sockets, 2 electrolyte vessel with specimens and specimen holders (clamps), 3 electrolyte vessel with specimen holders (hooks), 4 flow control valves, 5 gas supply, 6 power pack, 7 diaphragm pump switch, 8 air / external gas supply reversing valve

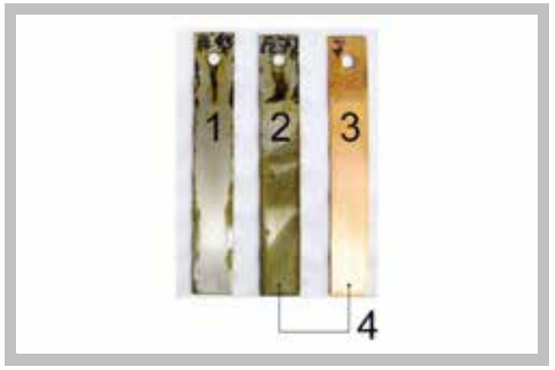

Result of experiment: a steel specimen (2) and a copper specimen (3) were electrically connected (4) and supplied with an external voltage. A steel specimen (1) with no electrical connection was used as a reference.

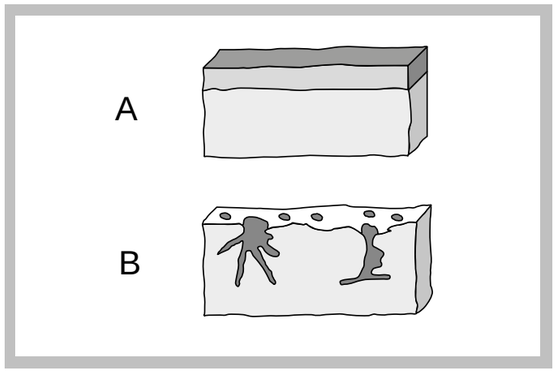

Two corrosion types: A surface corrosion, B pitting

Specification

[1] investigation of corrosion and corrosion protection measures
[2] 8 electrolyte vessels with covers and 6 specimen holders each
[3] adjustable power pack for application of external voltage
[4] air supply via diaphragm pump
[5] reversing valve for air or external gas supply
[6] adjustment of gas flow rate for each vessel using flow control valves
[7] recording of pH value of electrolyte solutions using manual unit
[8] pressure range for external gas supply: 0,2...1,0bar

Technical Data

Electrolyte vessels
- capacity: 1000mL
- material: glass

Power pack
- voltage: 0...30VDC
- current: 0…5A

Diaphragm pump: approx. 260L/h

pH meter
- measuring range: 0…14pH
- resolution: 0,01pH

Specimens
- 6x stainless steel, steel, copper, brass, aluminium each
- 3x glass
- dimensions: 100x15x1mm

Dimensions and Weight

LxWxH: 1280x460x630mm (experimental unit)
Weight: approx. 55kg
LxWxH: 730x480x240mm (storage system)
Weight: approx. 15kg

Required for Operation

230V, 50/60Hz, 1 phase or 120V, 60Hz/CSA, 1 phase

Scope of Delivery

1 corrosion experimental unit
1 pH meter
1 set of specimens
1 set of laboratory cables
1 coupling to connect an external gas supply
1 storage system
1 set of instructional material

Order Details

083.10500 CE 105 Corrosion Experimental Unit

G.U.N.T Gerätebau GmbH, Hanskampring 15-17, D-22885 Barsbüttel, Phone +49 (40) 67 08 54-0, Fax +49 (40) 67 08 54-42, E-mail sales@gunt.de, Web http://www.gunt.de
We reserve the right to modify our products without any notifications.

PUMPS AND COMPRESSORS: INDISPENSABLE IN PROCESS ENGINEERING

Our devices serve to demonstrate all important aspects of pumps in a clear and practical manner. This includes, for example, recording the characteristics of a centrifugal pump.

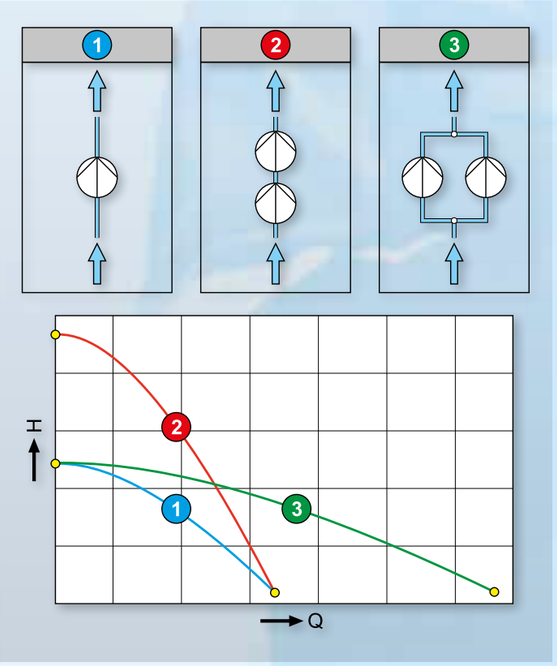

Typical characteristics of centrifugal pumps

***1** individual pump, **2** series connection, **3** parallel connection*

***Q** flow rate, **H** head*

Pumps and compressors are work machines and key components of process engineering systems. Exact knowledge of the design and functionality of these components is therefore a vital part of the training of future specialists and engineers.

Pumps serve to convey incompressible fluids. Based on their operating principle, they can be divided into centrifugal pumps and positive displacement pumps.

Compressors serve to convey and compress gaseous substances. Based on the level of generated pressure, they can be divided into:

- ventilators $p < 1{,}1$ bar
- fans $p = 1{,}1 – 3{,}0$ bar
- compressors $p > 3{,}0$ bar

A very common variant are piston compressors. Piston compressors can have one or more stages.

The ET 500 serves to demonstrate the principle of operation of a two-stage piston compressor in a straightforward manner. The provided software enables you to record measured values and analyse the experiments.

ET 500 *Two-Stage Piston Compressor*

ET 500 software

INSTALLATION AND MAINTENANCE

If a pump or compressor is not working correctly, there is a risk of production and supply interruptions. Replacing a pump is often significantly less economic than proper preventive maintenance. Maintenance is to ensure that a component remains functional and/or restore its functionality.

This section therefore presents training systems to demonstrate installation and maintenance of typical system components in a practical manner.

To ensure that the students are optimally prepared for their job, we have placed great emphasis on a practical character of the exercises. This includes manual skills and a systematic way of working as well as reading and understanding engineering drawings.

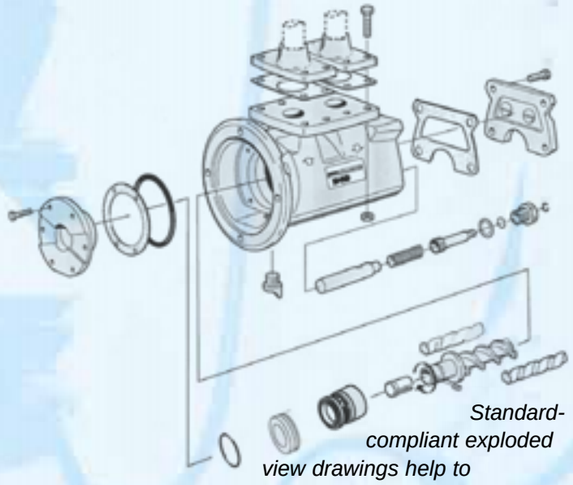

Standard-compliant exploded view drawings help to understand the design of a pump

MT 184 *Assembly & Maintenance Exercise: Piston Pump*

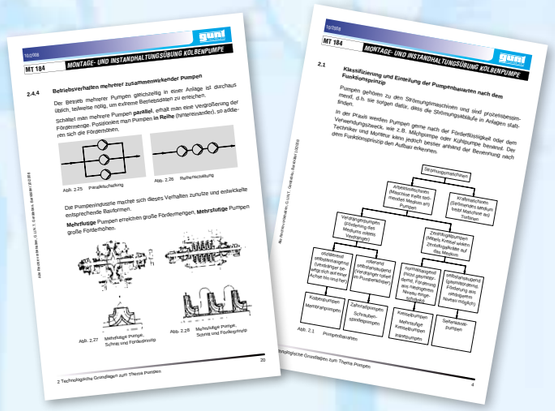

Instructional material

Our comprehensive instructional material supports you ideally when planning and performing the exercises. The instructional material is provided on paper and as a PDF file on CD.

HM 365.10 SUPPLY UNIT FOR PUMPS IN PROCESS ENGINEERING

HM 365.10 Supply Unit for Water Pumps with HM 365 Universal Brake and Drive Unit

HM 365.10 One supply unit for all pumps

HM 365.10 enables the examination of typical pumps used in process engineering. The pumps are simply attached to the supply unit with clamping levers and integrated into a water circuit with hoses.

If combined with the HM 365 drive unit, it is possible to set various speeds, pressures and flow rates. The supply unit, brake and drive unit are provided with comprehensive measuring equipment to determine the characteristic parameters of each individual pump.

Learning contents

- recording of pump characteristics
- determining the power requirement of the pump
- determining the hydraulic power of the pump
- determining the pump efficiency
- determining the system characteristics and the operating point of the pump
- checking the required NPSH value of the pump

SOFTWARE FOR DATA ACQUISITION

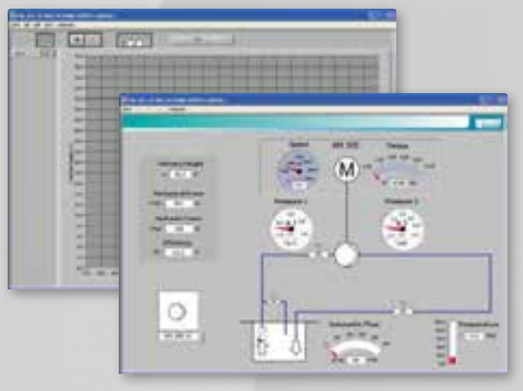

The data acquisition software supports the entire range of experiments with all pumps.

Main features

- process schematic with display of the current measured data for each pump
  - pressure on intake and delivery side
  - flow rate
  - temperature
  - speed
  - torque
- recording of pump and system characteristics
- comprehensive help function

HM 365.11 *Standard Centrifugal Pump*

Product no. 070.36511

HM 365.14 *Centrifugal Pumps: Series and Parallel Connected*

Product no. 070.36514

HM 365.10 is equipped with a manual pump for filling the pumps that are not self-priming and the normally primed pumps

HM 365.15 *Side Channel Pump*

Product no. 070.36515

HM 365.17 *Reciprocating Piston Pump*

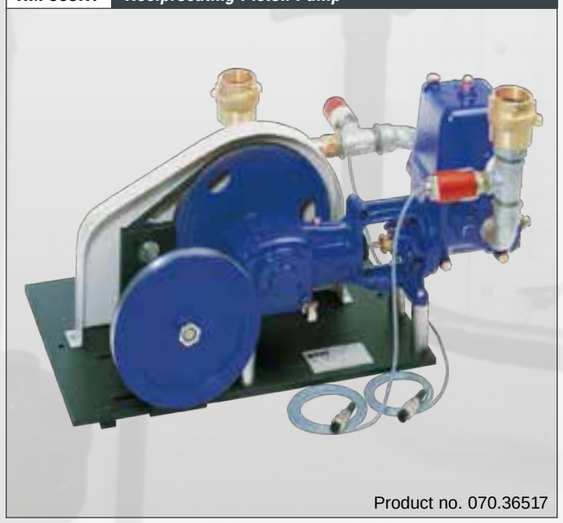

Product no. 070.36517

HM 365.10 Supply Unit for Water Pumps

*** Closed water circuit for supplying water pumps**

*** GUNT software for data acquisition and visualisation**

*** Part of a device series for examining power engines and work machines**

Technical Description

Pumps are work machines and serve to convey incompressible fluids. Depending on their principle of operation, they are divided into dynamic pumps and positive displacement pumps.

In dynamic pumps, the energy is transferred by means of vanes on an impeller. The vanes are shaped in such a way that the flow of the medium around them generates a pressure difference between the intake and the delivery side.

Positive displacement pumps convey the medium by changing the volume and correspondingly opening and closing inlets and outlets. The volume is changed either by oscillating or by rotating pump movements, depending on the design of the positive displacement pump. In the case of large flow rates, the advantages of dynamic pumps, e.g. centrifugal pumps, prevail; positive displacement pumps, e.g. piston pumps, are rather used for small flow rates and high heads.

The HM 365.10 supply unit can be used to supply the working medium water to various dynamic and positive displacement pumps (HM 365.11 to HM 365.19). The pumps are driven by the HM 365 Universal Brake and Drive Unit.

The trainer works independently from the water supply mains as a closed circuit with storage tank. The individual pumps are placed onto the working surface, connected via hoses and attached with clamping levers. A belt connects the pump to the drive unit.

The flow rate is measured with an electromagnetic flow rate sensor. A temperature sensor measures the temperature in the piping system. Each pump is equipped with pressure sensors to measure the intake and delivery pressures. The measured values can be read on digital displays on the supply unit. At the same time, the measured values can also be transmitted directly to a PC via USB. The data acquisition software is included.

The well-structured instructional material sets out the fundamentals and provides a step-by-step guide through the experiments.

Learning Objectives / Experiments

in conjunction with HM 365 and a pump of the HM 365.11 - HM 365.19 series
- recording of pump characteristics
- determining the power requirement of the pump
- determining the hydraulic power of the pump
- determining the pump efficiency
- determining the system characteristics and the operating point of the pump
- checking the required NPSH value of the pump

HM 365.10 Supply Unit for Water Pumps

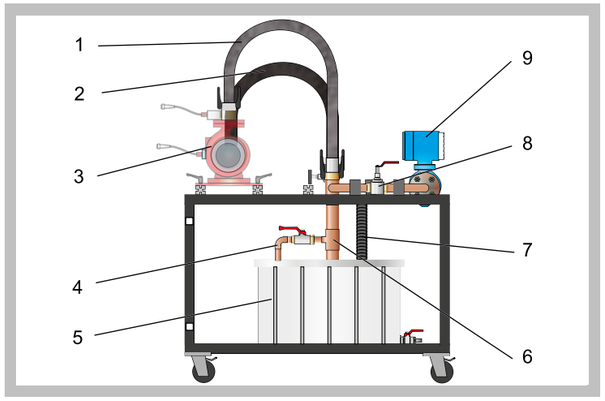

1 delivery line, 2 intake line, 3 pump (HM 365.11 - HM 365.19), 4 drain line, 5 storage tank, 6 intake pipe, 7 return line, 8 flow control valve, 9 flow meter

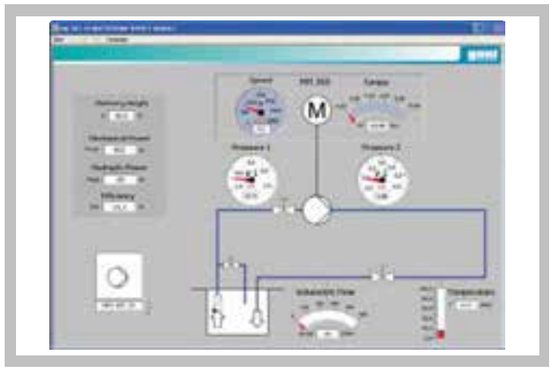

GUNT software screenshot: process schematic

Functional experimental set-up: HM 365 drive unit (left), HM 365.10 with pump to be examined (right)

Specification

[1] supply unit for operating various water pumps of the HM 365.11 to HM 365.19 series
[2] closed water circuit
[3] driven by HM 365
[4] connection of the pumps via flexible hoses with quick-release couplings
[5] pressure sensors for intake and delivery pressures included in scope of delivery of the pumps
[6] measurement of the water temperature in the piping system via PT100
[7] flow rate measurement with electromagnetic flow meter
[8] digital displays for flow rate, pressure and temperature
[9] GUNT software for data acquisition via USB under Windows Vista or Windows 7

Technical Data

Storage tank: 96L

Measuring ranges
- intake pressure: -1...1bar
- delivery pressure: 0...6bar
- temperature: 0...100°C
- flow rate: 0...480L/min

Dimensions and Weight

LxWxH: 1200x850x1150mm
Weight : approx. 140kg

Required for Operation

230V, 50/60Hz, 1 phase or 120V, 50/60Hz, 1 phase or 120V, CSA, 1 phase

Scope of Delivery

1 supply unit
1 display unit
1 GUNT software CD + USB cable
2 hoses with quick-release couplings
1 set of instructional material

Order Details

070.36510 HM 365.10 Supply Unit for Water Pumps

G.U.N.T Gerätebau GmbH, Hanskampring 15-17, D-22885 Barsbüttel, Phone +49 (40) 67 08 54-0, Fax +49 (40) 67 08 54-42, E-mail sales@gunt.de, Web http://www.gunt.de
We reserve the right to modify our products without any notifications.

HM 365 Universal Drive and Brake Unit

Technical Description

HM 365 is the core element of a modular equipment series enabling experiments at the most varied engines and machines, e.g. pumps, turbines or combustion engines. The machine under investigation is connected to the HM 365 via a belt drive. Fasteners couple the HM 365 and the engine or machine under investigation mechanically.

The main function of the HM 365 is the provision of the required drive or brake power to investigate the selected engines or machines. This power is generated by an air-cooled asynchronous motor with frequency converter. The energy that is generated during generator operation is converted into heat in a load resistor. The drive and brake torque can be finely adjusted. It is measured by a force transducer. For this purpose the asynchronous motor is suspended on a pendulum bearing. To tighten the V-belt, the motor can be moved.

HM 365 includes digital displays for speed and torque. The data transmission between the HM 365 and the investigated engine or machine takes place via a data cable. All measuring signals are available in electronic form and can be saved or further processed using the software for data acquisition from the engine or machine.

Learning Objectives / Experiments

asynchronous motor as drive
- torque measurement
- speed measurement

asynchronous motor as brake
- torque measurement
- speed measurement

*** Core component for experiments on various engines and machines**

*** Asynchronous motor with frequency converter and fine adjustment of the drive or brake torque**

*** Connection between HM 365 and engine or machine via V-belt drive**

*** Set-up of the complete experimental unit together with an engine or machine**

HM 365 Universal Drive and Brake Unit

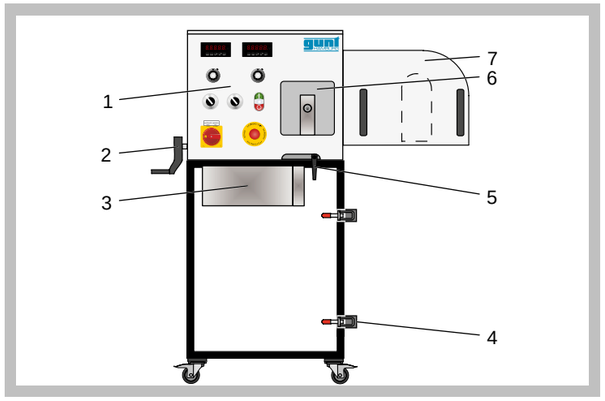

1 displays and controls, 2 clamping device spindle for the asynchronous motor, 3 load resistance, 4 clamping device, 5 fastener for the asynchronous motor, 6 transparent inspection cover, 7 protective cover for V-belt

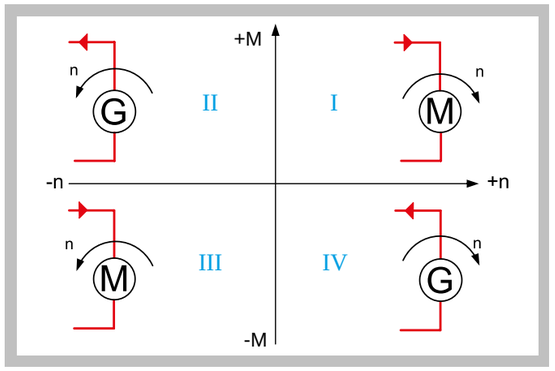

Representation of 4-quadrant operation in speed/torque diagram: I motor operation, clockwise rotation (drive), II generator operation, anticlockwise rotation (brake), III motor operation, anticlockwise rotation (drive), IV generator operation, clockwise rotation (brake); red line: energy flow, M torque, n speed

This picture shows a complete experimentation set-up: axial-flow pump HM 365.45 connected to the universal drive and brake unit HM 365

Specification

[1] drive and brake unit for connecting to various engines and machines
[2] asynchronous motor with frequency converter
[3] asynchronous motor with pendulum bearing, torque measurement via lever arm and force transducer
[4] speed measurement by reflective light sensor at the motor shaft
[5] 4 quadrant operation via frequency converter
[6] measurements for speed and torque displayed digitally at the equipment

Technical Data

Asynchronous motor with frequency converter
- power: 2200W
- max. speed: approx. 3000min^{-1}
- max. torque: approx. 12Nm

V-belt drive
- V-belt length: 1157mm, 1180mm, 1250mm
- V-belt type: SPA
- V-belt pulley diameter: 125mm

Load resistor: 72 Ohm, 2400W

Measuring ranges
- torque: -15...15Nm
- speed: 0...5000min^{-1}

Dimensions and Weight

LxWxH: 1000x800x1250mm
Weight: approx. 125kg

Required for Operation

400V, 50/60Hz, 3 phases or 230V, 60Hz/CSA, 3 phases

Scope of Delivery

1 drive and brake unit
1 set of V-belts
1 data cable
1 manual

Order Details

070.36500 HM 365 Universal Drive and Brake Unit

G.U.N.T Gerätebau GmbH, Hanskampring 15-17, D-22885 Barsbüttel, Phone +49 (40) 67 08 54-0, Fax +49 (40) 67 08 54-42, E-mail sales@gunt.de, Web http://www.gunt.de
We reserve the right to modify our products without any notifications.

MT 180 Assembly & Maintenance Exercise: Centrifugal Pump

The illustration shows the tool box with kit and tool inlay, and in the foreground the fully assembled pump.

*** Practical exercise on the assembly and maintenance of a standard centrifugal pump**

*** Comprehensive and well-structured instructional material**

Technical Description

Centrifugal pumps are rotodynamic pumps and operate normally primed. They are in widespread use, and are deployed primarily in the pumping of water. Their applications include use in shipbuilding, the process industries and in water supply systems. They are compact and relatively simple in design. The water is conveyed by centrifugal force generated by the rotation of the pump impeller. Standard pumps are - as the term suggests - standard items. As a result they are relatively inexpensive to purchase and maintain. In the lifecycle of a pump, maintenance and repair work is usually required as in many cases pumps are not considered as pure replacement items.

The MT 180 kit forms part of the GUNT assembly, maintenance and repair practice line designed for training at technical colleges and in company training centres. A close link between theory and practice is key to the learning content. The kit is ideally suited to project based learning with a particular emphasis on 'hands-on' work. Independent working by the students is assisted and encouraged. Learning in a small team offers a useful learning format.

MT 180 enables a typical standard centrifugal pump to be assembled and maintained. Students become familiar with all the pump components and their modes of operation. The parts are clearly laid out in a tool box. Systematic assembly and disassembly of a pump is practiced.

The instructional material details the individual steps involved in the exercise, and provides additional information on the areas of application, mode of operation and design of the pump.

Learning Objectives / Experiments

- design and function of a centrifugal pump and its components
- assembly and disassembly for maintenance and repair purposes
- replacing components (e.g. seals or bearings)
- troubleshooting, fault assessment
- planning and assessment of maintenance and repair operations
- reading and understanding engineering drawings and operating instructions

MT 180 Assembly & Maintenance Exercise: Centrifugal Pump

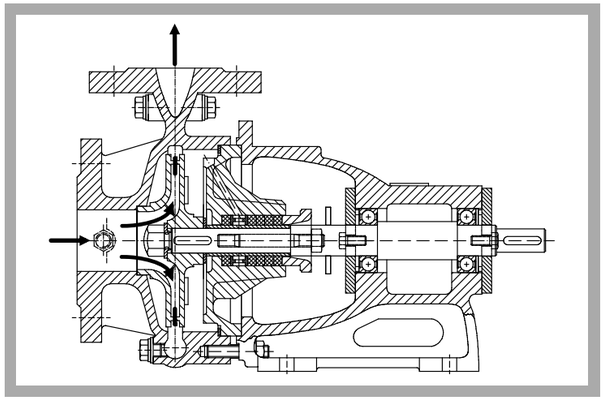

Sectional drawing of the centrifugal pump

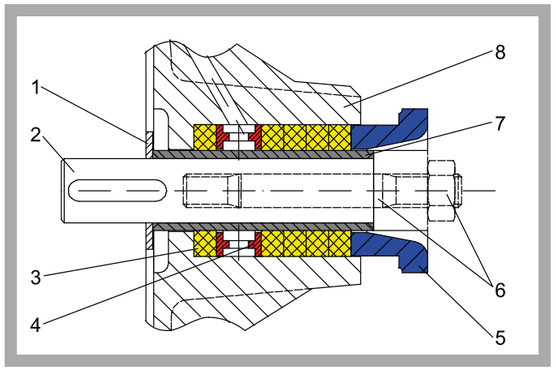

Packing gland: 1 disk, 2 shaft, 3 gland packing, 4 locking ring, 5 packing gland frame, 6 stud bolt with hexagon nut, 7 shaft sheath, 8 housing cover

Assembly of the centrifugal pump: fixing of the bearing cover with screws

Specification

[1] learning concept for maintenance and repair exercises on a single-stage, normally primed centrifugal pump with a spiral housing
[2] pump according to DIN 24255
[3] enclosed pump impeller with 5 blades, designed for pure liquids
[4] pump shaft sealing, based on the gland principle
[5] 2 assembly aids and a complete tool set
[6] pump parts and tools housed in a tool box
[7] the kit forms part of the GUNT assembly, maintenance and repair practice line

Technical Data

Single-stage centrifugal pump
- power consumption: max. 1100W
- max. flow rate: 19m³/h
- max. head: 25m
- speed: 3000min^{-1}
- intake connection: DN50
- delivery connection: DN32
- housing and impeller: grey cast iron

Dimensions and Weight

LxWxH: 690x360x312mm (tool box)
Weight: approx. 35kg

Scope of Delivery

1 complete kit of a standard centrifugal pump
1 set of tools, consisting of
- 2 combination wrenches size 13, 17
- 1 double-ended box spanner size 24/26 with tommy bar
- 1 bearing puller, three-arm
- 1 slotted screwdriver, 5,5
- 1 soft-faced hammer
- 2 assembly aids for assembly / disassembly of bearings

1 set of replacement parts, consisting of
- 1 flat seal
- 1 gland packing

1 tool box with compartment insert and foam inlay
1 set of instructional material, consisting of
- technical description of system, complete set of drawings with individual parts and parts list, description of maintenance and repair processes, suggested exercises
- 1 operator's manual for the industrial pump

Order Details

051.18000 MT 180 Assembly & Maintenance Exercise: Centrifugal Pump

G.U.N.T Gerätebau GmbH, Hanskampring 15-17, D-22885 Barsbüttel, Phone +49 (40) 67 08 54-0, Fax +49 (40) 67 08 54-42, E-mail sales@gunt.de, Web http://www.gunt.de
We reserve the right to modify our products without any notifications.

MT 181 Assembly & Maintenance Exercise: Multi-Stage Centrifugal Pump

The illustration shows the tool box with kit and tools. The fully assembled pump is shown in the foreground.

*** Practical exercise on the assembly and maintenance of a multi-stage centrifugal pump**

*** Comprehensive and well-structured instructional material**

Technical Description

Centrifugal pumps are rotodynamic pumps and operate normally primed.They are in widespread use, and are deployed primarily in the pumping of water. Their range of applications include use in shipbuilding, the process industries and in water supply systems. Very high delivery pressures can be generated by connecting multiple impellers in series. Centrifugal pumps are compact and relatively simple in design. The water is conveyed by centrifugal force generated by the rotation of the pump impeller. In the lifecycle of a pump, maintenance and repair work is usually required as in many cases pumps are not considered as pure replacement items.

The MT 181 kit forms part of the GUNT assembly, maintenance and repair practice line designed for training at technical colleges and in company training centres. A close link between theory and practice is key to the learning content. The kit is ideally suited to project-based learning with a particular emphasis on 'hands-on' work. Independent working by the students is assisted and encouraged. Learning in a small team offers a useful learning format.

MT 181 enables a typical multi-stage centrifugal pump to be assembled and maintained. Students become familiar with all the pump components and their modes of operation. The parts are clearly laid out in a tool box. Systematic assembly and disassembly of a pump is practiced.

The instructional material details the individual steps involved in the exercise, and provides additional information on the areas of application, mode of operation and design of the pump.

Learning Objectives / Experiments

- design and function of a multi-stage pump and its components
- assembly and disassembly for maintenance and repair purposes
- replacing components (e.g. seals, bearings or impellers)
- troubleshooting, fault assessment
- planning and assessment of maintenance and repair operations
- reading and understanding engineering drawings and operating instructions

MT 181 Assembly & Maintenance Exercise: Multi-Stage Centrifugal Pump

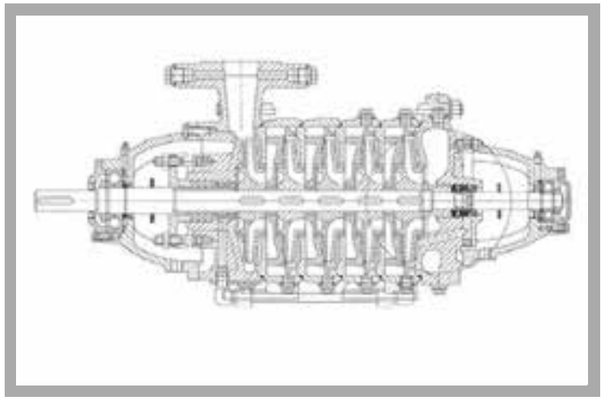

Sectional drawing of a similar multi-stage centrifugal pump (MT 181 has four stages; the intake and delivery connections are on the same side)

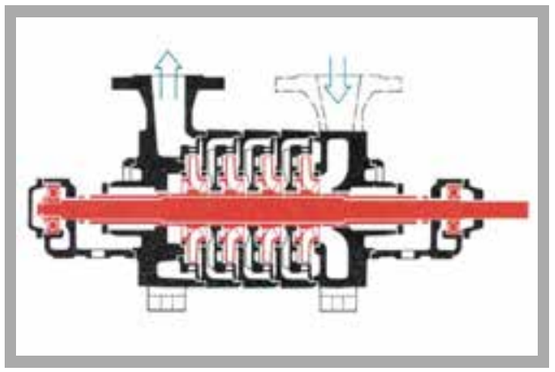

Schematic view of a four-stage centrifugal pump

Assembly of the four-stage centrifugal pump: assembling the packing gland rings

Specification

[1] learning concept for maintenance and repair exercises on a four-stage, normally primed centrifugal pump
[2] shaft sealing based on the gland principle (delivery side) and with floating ring seal (intake side)
[3] driven by motor (not included) and clutch via pump shaft
[4] 4 assembly aids and complete tool set
[5] pump parts and tools housed in a tool box
[6] the kit forms part of the GUNT assembly, maintenance and repair practice line

Technical Data

Four-stage centrifugal pump
- power consumption: max. 1400W
- max. flow rate: 18m³/h
- max. head: 28m
- speed: 1450min^{-1}
- intake connection: DN50
- delivery connection: DN40
- housing and impellers: grey cast iron

Dimensions and Weight

LxWxH: 690x360x312mm (tool box)
Weight: approx. 58kg

Scope of Delivery

1 complete kit of a 4-stage centrifugal pump
1 set of tools, consisting of
- 8 combination wrenches size 10, 13, 17, 24, 27, 36, 2x size 19
- 1 bearing puller, two-arm
- 2 screwdrivers
- 1 set of forcing pliers for shaft circlips
- 1 punch
- 1 soft-faced hammer
- 1 tool for slot nut
- 1 brace
- 2 striker sleeves for assembly / disassembly of bearings

1 set of replacement parts, consisting of
- 1 set of packing gland rings
- 1 seal
- 1 slot nut

1 tin of corrosion-proofing spray
1 box for small parts
1 tool box with foam inlay
1 set of instructional material, consisting of
- technical description of system, complete set of drawings with individual parts and parts list, description of maintenance and repair processes, suggested exercises
- 1 operator's manual for the industrial pump

Order Details

051.18100 MT 181 Assembly & Maintenance Exercise: Multi-Stage Centrifugal Pump

G.U.N.T Gerätebau GmbH, Hanskampring 15-17, D-22885 Barsbüttel, Phone +49 (40) 67 08 54-0, Fax +49 (40) 67 08 54-42, E-mail sales@gunt.de, Web http://www.gunt.de
We reserve the right to modify our products without any notifications.

MT 182 Assembly & Maintenance Exercise: Screw Pump

The illustration shows the tool box with kit and tools. The fully assembled pump is shown in the foreground.

*** Practical exercise on the assembly and maintenance of a screw pump**

*** Comprehensive and well-structured instructional material**

Technical Description

Screw pumps are positive displacement pumps and operate in a rotary manner, normally primed. The pump presented here can be used for a number of different fluids. These include any non-aggressive fluids with lubricating properties, with viscosities between 2...1500mm²/s, such as lubricating oil, vegetable oil, hydraulic fluid, glycols, polymers and emulsions. Typical applications include: lubricating diesel motors; gears; gas, steam and water turbines; and cooling and filtration circuits in large-scale machines and hydraulic systems.

The MT 182 kit forms part of the GUNT assembly, maintenance and repair practice line designed for training at technical colleges and in company training centres. A close link between theory and practice is key to the learning content. The kit is ideally suited to project-based learning with a particular empasis on 'hands-on' work. Independent working by the students is assisted and encouraged. Learning in a small team offers a useful learning format.

MT 182 enables a typical screw pump to be assembled and maintained. Students become familiar with all the pump components and their modes of operation. The parts are clearly laid out in a toolbox. Systematic assembly and disassembly of a pump is practiced.

The accompanying material details the individual steps involved in the exercise, and provides additional information on the areas of application, mode of operation and design of the pump.

Learning Objectives / Experiments

- design and function of a screw pump and its components
- assembly and disassembly for maintenance and repair purposes
- replacing components (e.g. seals)
- troubleshooting, fault assessment
- planning and assessment of maintenance and repair operations
- reading and understanding engineering drawings and operating instructions

MT 182 Assembly & Maintenance Exercise: Screw Pump

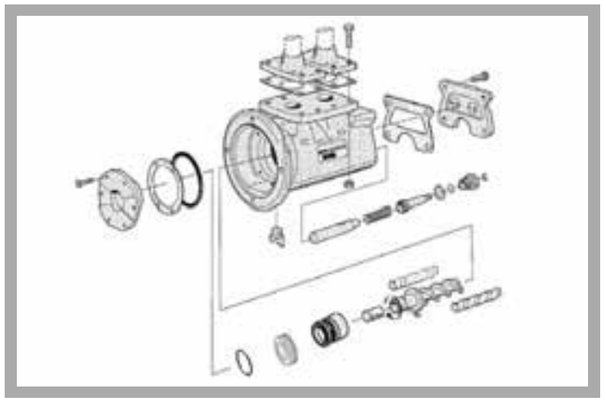

Exploded-view drawing of the screw pump

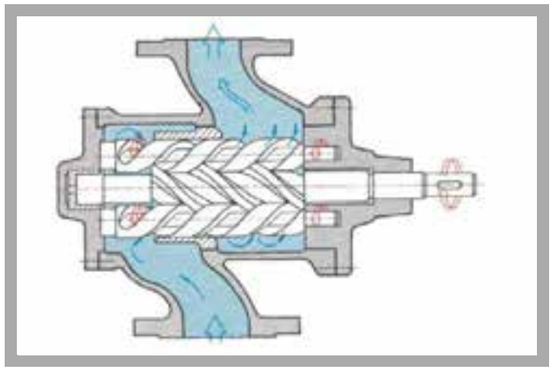

Principle of operation of the screw pump

Assembly of the srew pump: assembling the valve piston with the valve spring

Specification

[1] learning concept for maintenance and repair exercises on a screw pump
[2] three-spindle screw pump with one driving spindle and two delivery spindles
[3] integrated pressure limiting valve; at overpressures a portion of the flow is returned to the intake side
[4] used for media with a kinematic viscosity in the range 2...1500mm²/s
[5] pump parts and tools housed contained in a tool box
[6] the kit forms part of the GUNT assembly, maintenance and repair practice line

Technical Data

Screw pump
- power consumption: max. 1350W
- max. head: 12bar
- displacement: 13,9cm³/spindle revolution
- max. speed: 3600min^{-1}
- intake connection: DN25
- delivery connection: DN25
- grey cast iron housing

Dimensions and Weight

LxWxH: 690x360x312mm (tool box)
Weight: approx. 50kg

Scope of Delivery

1 complete kit of a screw pump
1 set of tools, consisting of
- 2 combination wrenches size 13, 25
- 2 Allen keys size 2,5, 10
- 2 screwdrivers

1 set of replacement parts, consisting of
- 1 flange seal
- 1 O-ring
- 1 snap ring

1 tin of corrosion-proofing spray
1 box for small parts
1 tool box with foam inlay
1 set of instructional material, consisting of
- technical description of system, complete set of drawings with individual parts and parts list, description of maintenance and repair processes, suggested exercises
- 1 operator's manual for the industrial pump

Order Details

051.18200 MT 182 Assembly & Maintenance Exercise: Screw Pump

G.U.N.T Gerätebau GmbH, Hanskampring 15-17, D-22885 Barsbüttel, Phone +49 (40) 67 08 54-0, Fax +49 (40) 67 08 54-42, E-mail sales@gunt.de, Web http://www.gunt.de
We reserve the right to modify our products without any notifications.

MT 183 Assembly & Maintenance Exercise: Diaphragm Pump

The illustration shows the tool box with kit and tools. The fully assembled pump is shown in the foreground.

*** Practical exercise on the assembly and maintenance of a diaphragm pump**

*** Comprehensive and well-structured instructional material**

The instructional material details the individual steps involved in the exercise, and provides additional information on the areas of application, mode of operation and design of the pump.

Technical Description

Diaphragm pumps are positive displacement pumps and operate in an oscillatory manner, normally primed. Since diaphragm pumps operate absolutely leakage-free, they are particularly suitable - provided the appropriate pump materials are used - for handling aggressive fluids such as acids and caustic solutions as well as radioactive, combustible, odorous and toxic liquids. Another advantage is that they can run dry. Diaphragm pumps are often used for volumetric metering (metering pumps).

The materials used in the construction of the diaphragm pump employed here make it particularly suitable for use in chemical engineering. It is equipped with a stroke length adjuster, and is deployed as a metering pump.

The MT 183 kit forms part of the GUNT assembly, maintenance and repair practice line designed for training at technical colleges and in company training centres. A close link between theory and practice is key to the learning content. The kit is ideally suited to project-based learning with a particular emphasis on 'hands-on' work. Independent working by the students is assisted and encouraged. Learning in a small team offers a useful learning format.

MT 183 enables a typical diaphragm pump to be assembled and maintained. Students become familiar with all the pump components and their modes of operation. The parts are clearly laid out in a toolbox. Systematic assembly and disassembly of a pump is practiced.

Learning Objectives / Experiments

- design and function of a diaphragm pump and its components
- assembly and disassembly for maintenance and repair purposes
- replacing components (e.g. seals or bearings)
- troubleshooting, fault assessment
- planning and assessment of maintenance and repair operations
- reading and understanding engineering drawings and operating instructions

MT 183 Assembly & Maintenance Exercise: Diaphragm Pump

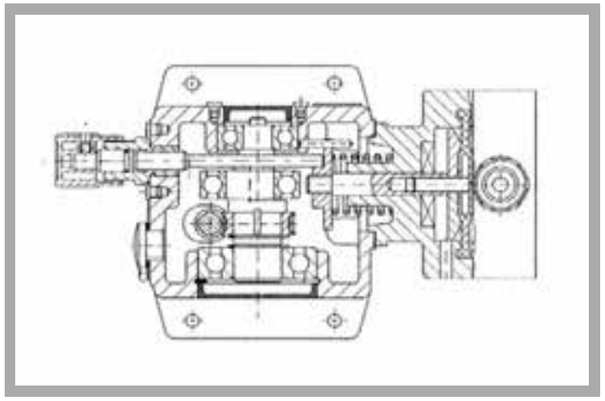

Sectional drawing of the diaphragm pump

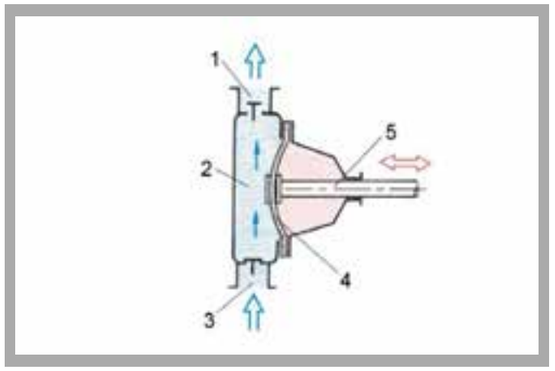

Operating principle of the single diaphragm pump: 1 delivery pipe, 2 pumping chamber, 3 intake pipe, 4 diaphragm, 5 push rod

Assembly of the diaphragm pump: driving the eccentric into the housing (using a device)

Specification

[1] learning concept for maintenance and repair exercises on a single-diaphragm pump
[2] diaphragm and push rod directly linked
[3] flow setting by manual stroke length adjustment (including during operation)
[4] manual drive with crank instead of a drive motor
[5] pump parts and tools housed in a tool box
[6] the kit forms part of the GUNT assembly, maintenance and repair practice line

Technical Data

Diaphragm pump
- flow rate: 0...2,4L/h
- max. head: 100m
- nominal stroke rate at 50Hz: 156min^{-1}
- power consumption: max. 90W
- intake connection: DN5
- delivery connection: DN5
- pump materials
  pump body: Polypropylene (PP)
  double-ball valves: PP/glass fibre-reinforced plastic
  valve balls: glass
  valve seals: FPM
  drive diaphragm: PTFE-lined

Dimensions and Weight

LxWxH: 690x360x312mm (tool box)
Weight: approx. 15kg

Scope of Delivery

1 complete kit of a diaphragm pump
1 set of tools, consisting of
- 4 combination wrenches size 22, 27, 2x8
- 3 Allen keys size 2.5, 3, 4
- 1 screwdriver; 1 bearing puller, three-arm
- 1 set of forcing pliers for inner circlips
- 1 set of forcing pliers for outer circlips
- 1 soft-faced hammer
- 2 striker sleeves for assembly/disassembly of bearings

1 hand drive
1 flange seal
1 tin of corrosion-proofing spray
1 box for small parts
1 tool box with foam inlay
1 set of instructional material, consisting of
- technical description of system, complete set of drawings with individual parts and parts list, description of maintenance and repair processes, suggested exercises
- 1 operator's manual for the industrial pump

Order Details

051.18300 MT 183 Assembly & Maintenance Exercise: Diaphragm Pump

G.U.N.T Gerätebau GmbH, Hanskampring 15-17, D-22885 Barsbüttel, Phone +49 (40) 67 08 54-0, Fax +49 (40) 67 08 54-42, E-mail sales@gunt.de, Web http://www.gunt.de
We reserve the right to modify our products without any notifications.

MT 184 Assembly & Maintenance Exercise: Piston Pump

The illustration shows the tool box with kit and tools. The fully assembled pump is shown in the foreground.

*** Practical exercise based on the assembly and maintenance of a piston pump**

*** Comprehensive and well-structured instructional material**

Technical Description

Piston pumps are positive displacement pumps and operate in an oscillatory manner, normally primed. At constant speed, their characteristic is an almost vertical straight line; at different pressures the volumetric flow remains approximately constant.

The pump presented here is a dual-action piston pump. This means that each piston stroke is both an intake and delivery stroke. Typical applications of the pump dealt with here are the pumping of drinking and service water for domestic use, in agriculture, shipping, industry and gardening centres.

The MT 184 kit forms part of the GUNT assembly, maintenance and repair practice line designed for training at technical colleges and in company training centres. A close link between theory and practice is key to the learning content. The kit is ideally suited to project-based learning with a particular emphasis on 'hands-on' work. Independent working by the students is assisted and encouraged. Performing in a small team offers a useful learning format.

MT 184 enables a typical piston pump to be assembled and maintained. Students become familiar with all the pump components and their modes of operation. The parts are clearly laid out in a tool box. Systematic assembly and disassembly of a pump is practiced. The instructional material details the individual steps involved in the exercise, and provides additional information on the areas of application, mode of operation and design of the pump.

Learning Objectives / Experiments

- design and function of a piston pump and its components
- assembly and disassembly for maintenance and repair purposes
- replacing components (e.g. seals or bearings)
- troubleshooting, fault assessment
- planning and assessment of maintenance and repair operations
- reading and understanding engineering drawings and operating instructions

MT 184 Assembly & Maintenance Exercise: Piston Pump

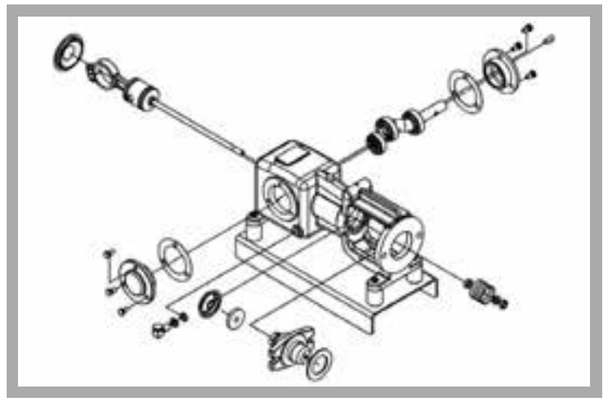

Exploded-view drawing of the piston pump

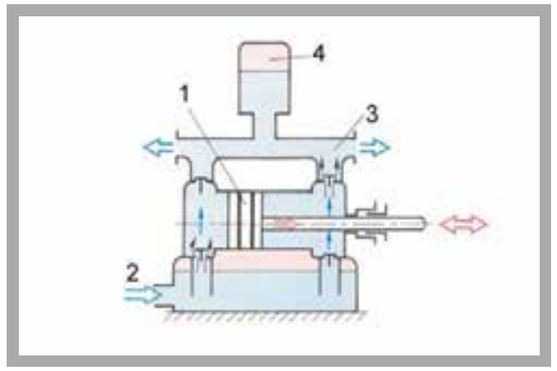

Principle of a double-acting piston pump: 1 piston, 2 intake pipe, 3 delivery pipe, 4 air vessel

Dissassembly of the piston pump: pulling off the ball bearing of the eccentric shaft (using a bearing puller)

Specification

[1] learning concept for maintenance and repair exercises on a double-acting piston pump
[2] air vessel to compensate for pressure surges
[3] integrated safety valve returns a portion of the flow back to the intake side in event of overpressure
[4] piston rod seal based on the gland principle
[5] pump drive via V-belt pulley
[6] pump parts and tools housed in a tool box
[7] the kit forms part of the GUNT assembly, maintenance and repair practice line

Technical Data

Piston pump
- max. flow rate: 1000L/h
- max. head: 60m
- max. power consumption: 370W
- drive via V-belt, motor speed: 1450min^{-1}
- intake connection: 1"
- delivery connection: 1"

Dimensions and Weight

LxWxH: 690x360x312mm (tool box)
Weight: approx. 33kg

Scope of Delivery

1 complete kit of a piston pump
1 set of tools, consisting of
- 6 open-end wrenches, size 13, 14, 19, 22, 2x size 10
- 1 soft-faced hammer
- 1 bearing puller, three-arm
- 1 punch
- 1 screwdriver
- 1 wrench for pressure relief valve
- 2 striker sleeves for assembly/disassembly of bearings
- 1 brace to disassemble connecting rod bearing

1 base plate
1 sleeve packing for piston
1 set of replacement parts, consisting of
- 1 sleeve packing for piston
- 4 packing gland rings
- 2 bearing cover seals

1 tin of corrosion-proofing spray
1 box for small parts
1 tool box with foam inlay
1 set of instructional material, consisting of
- technical description of system, complete set of drawings with individual parts and parts list, description of maintenance and repair operations, suggested exercises
- 1 operator's manual for the industrial pump

Order Details

051.18400 MT 184 Assembly & Maintenance Exercise: Piston Pump

G.U.N.T Gerätebau GmbH, Hanskampring 15-17, D-22885 Barsbüttel, Phone +49 (40) 67 08 54-0, Fax +49 (40) 67 08 54-42, E-mail sales@gunt.de, Web http://www.gunt.de
We reserve the right to modify our products without any notifications.

MT 185 Assembly & Maintenance Exercise: In-Line Centrifugal Pump

The illustration shows the tool box with kit and tools. The fully assembled pump is shown in the foreground.

*** Practical exercise on the assembly and maintenance of an in-line centrifugal pump**

*** Comprehensive and well-structured instructional material**

Technical Description

In-line centrifugal pumps are rotodynamic pumps and operate normally primed. In-line pumps are installed in the straight runs of pipelines. The difference between an in-line pump and a standard pump is that the intake and delivery connections of an in-line pump are aligned on a single axis.

The in-line centrifugal pump presented here is used to pump mechanically and chemically non-aggressive liquids. Its range of applications include use in water supply, irrigation and sprinkler systems, and heating engineering systems.

The MT 185 kit forms part of the GUNT assembly, maintenance and repair practice line designed for training at technical colleges and in company training centres. A close link between theory and practice is key to the learning content. The kit is ideally suited to project-based learning with a particular emphasis on 'hands-on' work. Independent working by the students is assisted and encouraged. Performing exercises in a small team offers a useful learning format.

MT 185 enables a typical in-line centrifugal pump to be assembled and maintained. Students become familiar with all the pump components and their modes of operation. The parts are clearly laid out in a tool box. Systematic assembly and disassembly of a pump is practiced.

The instruction material details the individual steps involved in the exercise, and provides additional information on the areas of application, mode of operation and design of the pump.

Learning Objectives / Experiments

- design and function of an in-line centrifugal pump and its components
- assembly and disassembly for maintenance and repair purposes
- replacing components (e.g. seals or bearings)
- troubleshooting, fault assessment
- planning and assessment of maintenance and repair operations
- reading and understanding engineering drawings and operating instructions

MT 185 Assembly & Maintenance Exercise: In-Line Centrifugal Pump

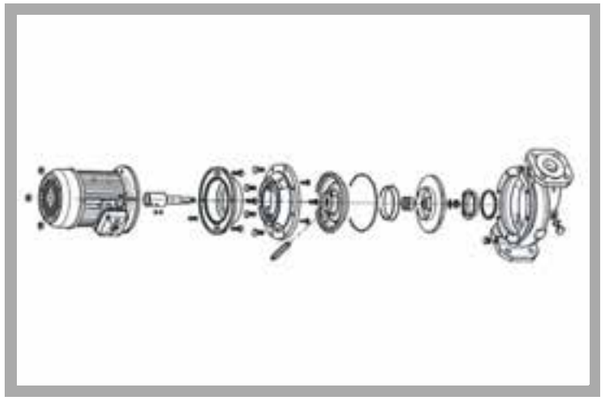

Exploded-view drawing of the in-line centrifugal pump

In-line centrifugal pump: intake and delivery connections on the same axis

Assembly of the in-line centrifugal pump: tightening the impeller nut

Specification

[1] learning concept for maintenance and repair exercises on an in-line centrifugal pump
[2] enclosed pump impeller with 5 blades, designed for pure liquids
[3] pump shaft sealing with floating ring seal
[4] pump drive by 3-phase AC motor
[5] pump parts and tools housed in a tool box
[6] the kit forms part of the GUNT assembly, maintenance and repair practice line

Technical Data

In-line centrifugal pump
- power consumption: max. 750W
- max. flow rate: 19m³/h
- max. head: 16m
- speed: 2900min^{-1}
- intake connection: DN40
- delivery connection: DN40
- housing and impeller: grey cast iron

Drive motor
- 400V, 50Hz, 3 phases; or 230V, 60Hz, 3 phases

Dimensions and Weight

LxWxH: 690x360x312mm (tool box)
Weight: approx. 40kg

Scope of Delivery

1 complete kit of an in-line centrifugal pump
1 set of tools, consisting of
- 5 combination wrenches size 13, 14, 17, 20, 22
- 2 Allen keys size 3, 8
- 1 screwdriver

1 sealing ring
1 box for small parts
1 tool box with foam inlay
1 set of instructional material, consisting of
- technical description of system, complete set of drawings with individual parts and parts list, description of maintenance and repair processes, suggested exercises
- 1 operator's manual for the industrial pump

Order Details

051.18500 MT 185 Assembly & Maintenance Exercise: In-Line Centrifugal Pump

G.U.N.T Gerätebau GmbH, Hanskampring 15-17, D-22885 Barsbüttel, Phone +49 (40) 67 08 54-0, Fax +49 (40) 67 08 54-42, E-mail sales@gunt.de, Web http://www.gunt.de
We reserve the right to modify our products without any notifications.

MT 186 Assembly & Maintenance Exercise: Gear Pump

The illustration shows the tool box with kit and tools. The fully assembled pump is shown in the foreground.

*** Practical exercise on the assembly and maintenance of a gear pump**

*** Comprehensive and well-structured instructional material**

Technical Description

Gear pumps are piston-type rotary pumps which operate on the positive-displacement principle. They are simple in design, and easy to handle. Gear pumps can generate operating pressures of up to 40bar and flow rates of up to 60m³/h. Their pulse-free delivery increases linearly with speed. High-viscosity media (oils, paints, adhesives, etc.) can also be pumped. Gear pumps are sensitive to hard solid-matter particles in the flow.

The materials used in the construction of the pump presented here make it resistant to most corrosive and aggressive chemicals. The plastic / metal gear wheel pairing results in relatively quiet running.

The MT 186 kit forms part of the GUNT assembly, maintenance and repair practice line designed for training at technical colleges and in company training centres. A close link between theory and practice is key to the learning content. The kit is ideally suited to project-based learning with a particular emphasis on 'hands-on' work. Independent working by the students is assisted and encouraged. Performing exercises in a small team offers a useful learning format.

MT 186 enables a typical gear pump to be assembled and maintained. Students become familiar with all the pump components and their modes of operation. The parts are clearly laid out in a tool box. Systematic assembly and disassembly of a pump is practiced. The instructional material details the individual steps involved in the exercise, and provides additional information on the areas of application, mode of operation and design of the pump.

Learning Objectives / Experiments

- design and function of a gear pump and its components
- assembly and disassembly for maintenance and repair purposes
- replacing components (e.g. seals)
- troubleshooting, fault assessment
- planning and assessment of maintenance and repair operations
- reading and understanding engineering drawings and operating instructions

MT 186 Assembly & Maintenance Exercise: Gear Pump

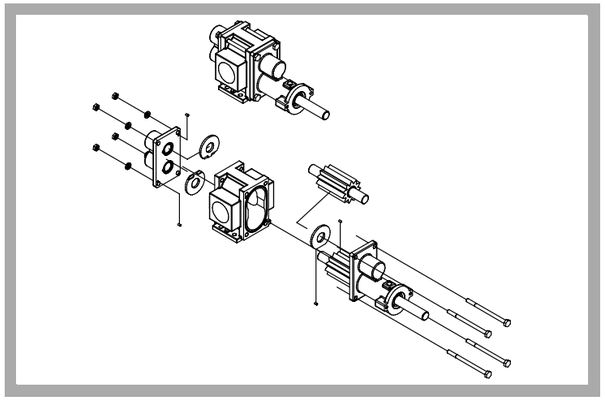

Exploded-view drawing of the gear pump

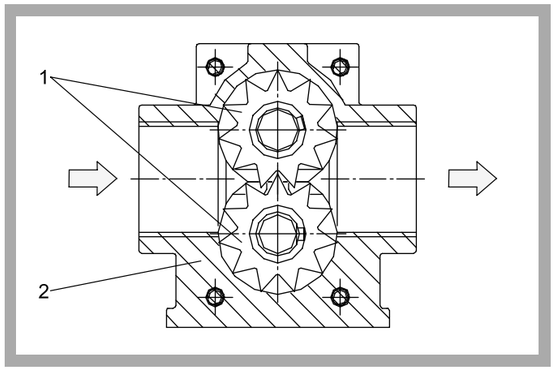

Function of a gear pump: 1 gear pair, 2 housing

Assembly of the centrifugal pump: assembling the driving shaft

Specification

[1] learning concept for maintenance and repair exercises on a gear pump
[2] relatively quiet running owing to the plastic/metal gear wheel pairing
[3] pump shaft sealing with floating ringseal
[4] suitable for solids-free media with dynamic viscosity up to 0...10000mPas
[5] pump parts and tools housed in a tool box
[6] the kit forms part of the GUNT assembly, maintenance and repair practice line

Technical Data

Gear pump
- power consumption: max. 2kW
- max. flow rate: 80L/min
- max. head: 70m
- motor speed: 300...1750min^{-1}
- intake connection thread: R 1 1/4"
- delivery connection thread: R 1 1/4"
- pump materials
  housing: stainless steel 316 (1.4401)
  gear wheels: stainless steel 316 (1.4401)/PTFE
  wearing plates: PTFE
  bearings: PTFE
- speed-dependent viscosities
  n=300min^{-1}: 10000mPas,
  n=1750min^{-1}: 3000mPas

Dimensions and Weight

LxWxH: 690x360x312mm (tool box)
Weight: approx. 20kg

Scope of Delivery

1 complete kit of a gear pump
1 set of tools, consisting of
- 2 combination wrenches size 11
- 1 hexagonal screwdriver, size 3/32"
- 2 screwdrivers
- 1 round wire snap ring for shafts

1 roll of PTFE sealing tape
1 box for small parts
1 tool box with foam inlay
1 set of instructional material, consisting of
- technical description of system, complete set of drawings with individual parts and parts list, description of maintenance and repair operations, suggested exercises
- 1 operator's manual for the industrial pump

Order Details

051.18600 MT 186 Assembly & Maintenance Exercise: Gear Pump

G.U.N.T Gerätebau GmbH, Hanskampring 15-17, D-22885 Barsbüttel, Phone +49 (40) 67 08 54-0, Fax +49 (40) 67 08 54-42, E-mail sales@gunt.de, Web http://www.gunt.de
We reserve the right to modify our products without any notifications.

HL 960.01 Assembly and Alignment of Pumps and Drives

*** Installing a pump in a system**

*** Alignment of electric motor and pump by different methods**

Technical Description

A complete work process when repairing work machines such as pumps consists of the following steps: assembly – alignment – test. The trainer described here was designed with industrial conditions in mind and is primarily intended for the practical training of maintenance engineers. It also offers a variety of topics and starting points for training in vocational schools.

The HL 960.01 trainer enables students to practise the entire maintenance process. On its own, the trainer can be used for assembly exercises with the option of aligning the drive and the pump. Combined with HL 960 Assembly Station Pipes and Valves and Fittings, the HL 960.01 trainer can be used as a test system for the completely assembled piping system.

The trainer consists of an electric drive motor, a standard pump and a piping system with storage tank and can be operated independent of the water supply mains. Students can practise exchanging pumps for inspection or repair as part of the assembly exercise. The exercises cover the entire system and its individual subassemblies. A manometer displays the pressure on the delivery side of the pump.

The position of the electric motor can be adjusted in three directions for alignment purposes. The alignment can either be checked in a conventional manner with a straight edge or with the reverse alignment method using two dial gauges. Non-contact, microprocessor-aided methods can also optionally be used (specific alignment systems are not included in the scope of delivery).

The well-structured instructional material sets out the fundamentals and provides a step-by-step guide through the experiments.

Learning Objectives / Experiments

- installing a pump in a system
- connecting and aligning motor and pump
- familiarisation with various alignment methods: straight edge, dial gauges
- familiarisation with key system components
- electrical installation of motor and switching elements
- assembly of pipes and instrumentation
- detail installation on a standard centrifugal pump
- reading and understanding engineering drawings, product documentation and circuit diagrams
- familiarisation with maintenance procedures
- planning assembly and maintenance steps

in conjunction with HL 960
- operational testing in a pipe network

HL 960.01 Assembly and Alignment of Pumps and Drives

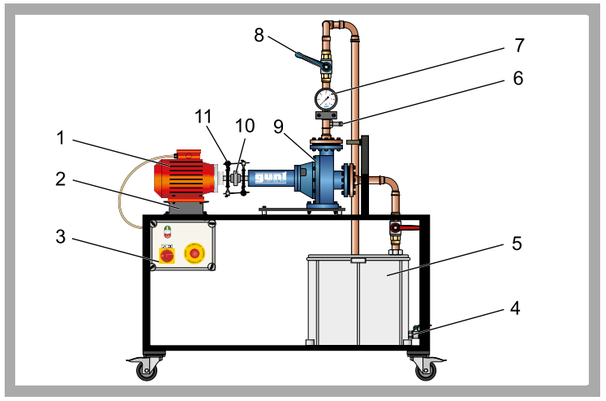

1 electric motor, 2 foundation for electric motor, 3 switch box, 4 HL 960 return connection, 5 storage tank, 6 HL 960 inlet connection, 7 manometer, 8 shut-off valve, 9 pump, 10 coupling

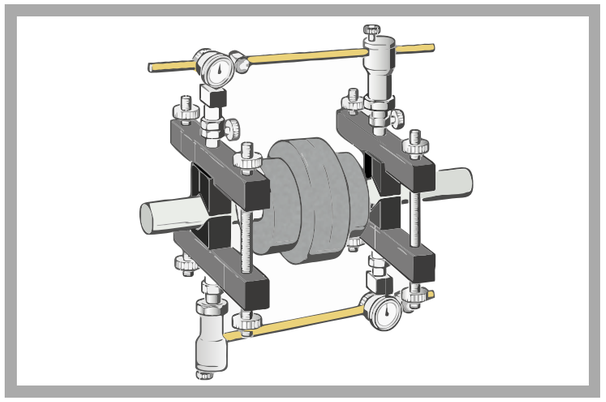

The illustration shows the principle of the dual radial dial gauge method of aligning shafts.

Specification

[1] mobile system for alignment of a standard pump and its drive motor
[2] asynchronous electric motor with constant speed
[3] electric motor with positioning frame and fit plates for alignment
[4] pump and motor connected via coupling
[5] checking of alignment using straight-edge or dial gauges
[6] manometer on pump delivery side
[7] pump with ball valves on intake and delivery side
[8] closed water circuit
[9] the system forms part of the GUNT assembly, maintenance and repair practice line

Technical Data

Centrifugal pump
- max. flow rate: 300L/min
- max. head: 16,9m
- power consumption: 750W

Asynchronous motor, single phase
- power output: 1100W
- speed: 3000min^{-1}

Storage tank: 96L

Measuring ranges
- dial gauges: 0...3mm / 0...20mm, resolution: 0,01mm
- manometer: 0...1,6bar

Dimensions and Weight

LxWxH: 1250x830x1160mm
Weight: approx. 122kg

Required for Operation

230V, 50/60Hz, 1 phase

Scope of Delivery

1 trainer with centrifugal pump and drive
1 set of measuring aids, consisting of
- 2 dial gauges 0...3mm
- straight-edge
- test shaft for sag measurement
- dial gauge with magnetic holder, 0...20mm

1 set of tools
1 set of instructional material

Order Details

065.96001 HL 960.01 Assembly and Alignment of Pumps and Drives

G.U.N.T Gerätebau GmbH, Hanskampring 15-17, D-22885 Barsbüttel, Phone +49 (40) 67 08 54-0, Fax +49 (40) 67 08 54-42, E-mail sales@gunt.de, Web http://www.gunt.de
We reserve the right to modify our products without any notifications.

CE 271 Multi-Head Diaphragm Pump

*** Metering with a multi-head diaphragm pump**

*** Stroke individually adjustable for each head**

Technical Description

Multi-head diaphragm pumps are used for metering in many process engineering areas. In food technology, for example, multi-head diaphragm pumps enable the precise observation of mixing ratios in order to ensure consistent high quality of the products. In addition, diaphragm pumps are leak-free and thus prevent germs from entering the piping system. This ensures that the high hygiene requirements that apply in food technology are observed.

The pump in CE 271 has three pump heads. Each pump head conveys water from the feed tank into a tank with scale. The common stroke rate of the three pump heads is set at the switch box. The stroke of each pump head is set directly at the pump. Three overflow valves enable the user to set a counter pressure for each pump head. Manometers indicate the pressures on the intake and delivery side of each pump head. This enables students to examine the effect of the counter pressure on the flow rate and the mixing ratio. A stopwatch for the determination of the flow rate using the scaled tanks is included in the scope of delivery.

The well-structured instructional material sets out the fundamentals and provides a step-by-step guide through the experiments.

Learning Objectives / Experiments

- familiarisation with the basic principle of a multi-head diaphragm pump
- flow rate and mixing ratio depending on
  * the stroke
  * the stroke rate
  * the counter pressure

CE 271 Multi-Head Diaphragm Pump

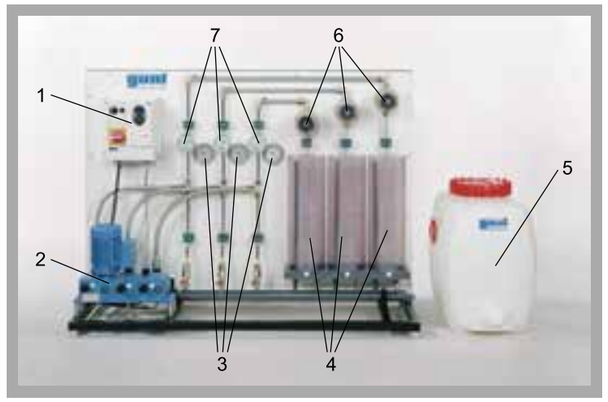

1 switch box, 2 pump, 3 manometer (intake side), 4 tanks with scale, 5 feed tank, 6 overflow valves, 7 manometer (delivery side)

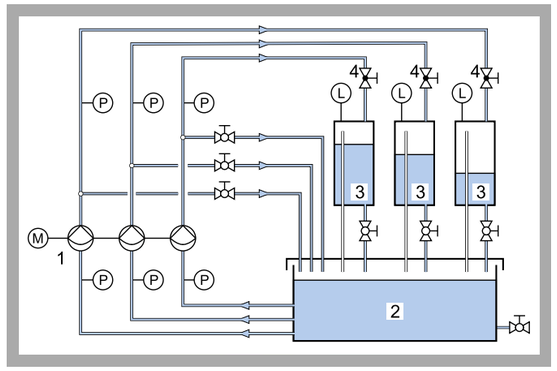

1 pump, 2 feed tank, 3 tanks with scale, 4 overflow valves; P pressure, L level

Adjusting the pump stroke

Specification

[1] examination of a multi-head diaphragm pump
[2] diaphragm pump with 3 heads
[3] common stroke rate adjustable for all 3 heads
[4] stroke individually adjustable for each head
[5] 3 overflow valves to set the counter pressure
[6] 3 scaled tanks to determine the flow rate
[7] 6 manometers to measure the pressure on the intake and delivery side
[8] 1 feed tank

Technical Data

Pump
- max. head: each approx.100m
- max. suction head: each approx. 3m
- max. stroke: each approx. 6mm
- flow rate: 3x 0...18L/h

Tanks
- tanks with scale: each 5L
- feed tank: 60L

3 overflow valves
- adjustable pressure range: each 2...6bar

Measuring ranges
- pressure (delivery side): 3x 0...10bar
- pressure (intake side): 3x -1...0bar
- stroke rate: 1x 0...100min^{-1}
- level 3x 0...20cm

Dimensions and Weight

LxWxH: approx. 1250x500x950mm
Weight: approx. 90kg

Required for Operation

230V, 50Hz, 1 phase

Scope of Delivery

1 experimental unit
1 feed tank
1 set of hoses
1 stopwatch
1 set of instructional material

Order Details

083.27100 CE 271 Multi-Head Diaphragm Pump

G.U.N.T Gerätebau GmbH, Hanskampring 15-17, D-22885 Barsbüttel, Phone +49 (40) 67 08 54-0, Fax +49 (40) 67 08 54-42, E-mail sales@gunt.de, Web http://www.gunt.de
We reserve the right to modify our products without any notifications.

CE 272 Rotary Vane Vacuum Pump

*** Rotary vane pump for vacuum generation**
*** Simulation of leaks**

Technical Description

Vacuum plays an important role in process engineering. It can, for example, be used to siphon off various fluids or for vacuum filtration. In vacuum distillation, vacuum is used to lower the boiling point and thus be able to separate substances that would decompose at higher temperatures. Another important area is the separation of sorbed substances from the solvent by means of vacuum in absorption systems.

Rotary vane pumps have a working space with a circular cross- section. A rotor is eccentrically installed in the working space. Springs press the vanes embedded in the rotor against the wall of the working space. Rotor and vanes divide the working space into two separate spaces with a variable volume. Due to the eccentric position of the rotor, the gas enclosed on the intake side is compressed when the rotor turns. The pressure of the gas increases with each rotation until it exceeds the ambient pressure and the outlet valve opens. The rotary vane pump constantly requires oil in the working space to ensure leak tightness and reduce the friction. Part of the oil is discharged with the air on the delivery side. An oil separator on the delivery side of the rotary vane pump removes the oil from the conveyed air.

The rotary vane pump in CE 272 conveys air from a pressure vessel. Negative pressure builds up in the pressure vessel. A large manometer on the pressure vessel indicates the negative pressure. The pressure vessel has two inlet lines for the simulation of loads and leaks. Silencers in the inlet lines reduce the flow noise. The flow rate in the two lines is adjusted by means of needle valves. A flow meter is installed in one of the two lines to simulate loads and leaks.

The well-structured instructional material sets out the fundamentals and provides a step-by-step guide through the experiments.

Learning Objectives / Experiments

- familiarisation with the basic principle of a rotary vane pump
- simulation of leaks
- generation of negative pressure over time
- determination of the flow rate as a function of the counter pressure

CE 272 Rotary Vane Vacuum Pump

1 needle valve, 2 flow meter, 3 silencer, 4 rotary vane pump, 5 oil separator, 6 pressure vessel, 7 needle valve with silencer, 8 manometer

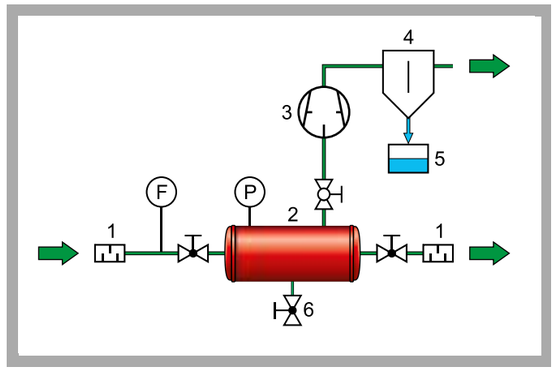

1 silencer, 2 pressure vessel, 3 rotary vane pump, 4 oil separator, 5 oil tank, 6 drain valve for condensate; F flow rate, P pressure

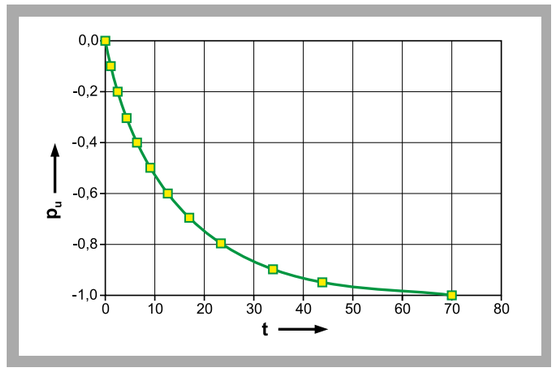

Generation of negative pressure over time:
p_u negative pressure in bar, t time in seconds

Specification

[1] vacuum generation with a rotary vane pump
[2] vacuum generation in a steel pressure vessel
[3] oil separator with tank on the delivery side of the rotary vane pump
[4] manometer to display the pressure in the vessel
[5] 1 inlet line with needle valve, 1 inlet line with needle valve and flow meter on the pressure vessel for simulation loads and leaks
[6] 2 silencers to reduce flow noise

Technical Data

Rotary vane pump
- max. flow rate: 5m³/h
- final vacuum: 0,02mbar
- motor power output: 370W

Volume of pressure vessel: 20L
Oil separator
- degree of separation: 99,98%
- capacity of tank: 150mL

Measuring ranges
- pressure: -1...0bar (resolution: 0,02bar)
- flow rate: 0,4...4Nm³/h

Dimensions and Weight

LxWxH: 1000x550x580mm
Weight: approx. 60kg

Required for Operation

230V, 50Hz, 1 phase

Scope of Delivery

1 experimental unit
1 stopwatch
1 set of instructional material

Order Details

083.27200 CE 272 Rotary Vane Vacuum Pump

G.U.N.T Gerätebau GmbH, Hanskampring 15-17, D-22885 Barsbüttel, Phone +49 (40) 67 08 54-0, Fax +49 (40) 67 08 54-42, E-mail sales@gunt.de, Web http://www.gunt.de
We reserve the right to modify our products without any notifications.

ET 500 Two-Stage Piston Compressor

*** Two-stage compressor with intercooler**

*** Compression process on a p-V diagram**

*** GUNT software for data acquisition**

Technical Description

Compressed air for industry and businesses that use compressed air as an energy source is generated by means of so-called compressed air generation systems. A key component of these systems is the compressor. It converts the supplied mechanical energy into a higher air pressure. Compressed air generation systems are used to drive machines in mining, for pneumatic control systems in assembly plants or tyre inflation systems at petrol stations.

ET 500 includes a complete compressed air generation system with a two-stage compressor and an additional pressure vessel as intercooler. The trainer enables the recording of compressor characteristics and representing the compression process in a p-V diagram.

The air is sucked into the priming tank and calmed there before it is compressed in two stages. The additional pressure vessel for intercooling is located between the first and second stage. After the second stage, the compressed air is pressed into another pressure vessel through a cooling tube. To achieve a steady state, the compressed air can be released through a blow-off valve with silencer. Safety valves and a pressure switch complete the system.

Sensors measure the pressures and temperatures in both stages as well as the electric power consumption. A nozzle at the priming tank serves to determine the intake volumetric flow rate. The measured values can be read on digital displays. At the same time, the measured values can also be transmitted directly to a PC via USB. The data acquisition software is included.

The well-structured instructional material sets out the fundamentals and provides a step-by-step guide through the experiments.

Learning Objectives / Experiments

- design and function of a two-stage compressor
- measurement of relevant pressures and temperatures
- determination of the intake volumetric air flow rate
- compression process on a p-V diagram
- determination of the efficiency

ET 500 Two-Stage Piston Compressor

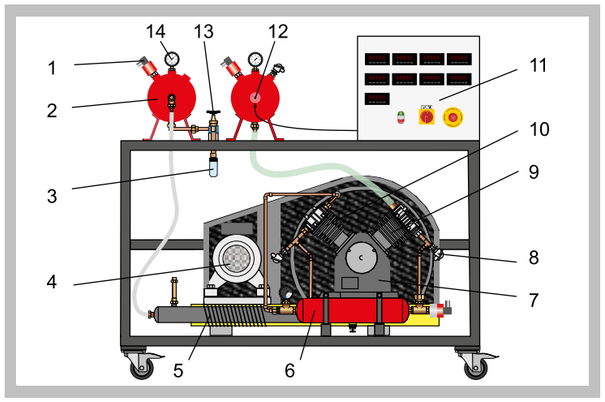

1 pressure sensor, 2 pressure vessel after 2nd compressor stage, 3 silencer, 4 drive motor, 5 intercooler, 6 pressure vessel after 1st compressor stage (intermediate reservoir), 7 piston compressor, 8 temperature sensor, 9 compressor (1st stage), 10 compressor (2nd stage), 11 switch cabinet, 12 priming tank with nozzle, 13 safety valve, 14 manometer

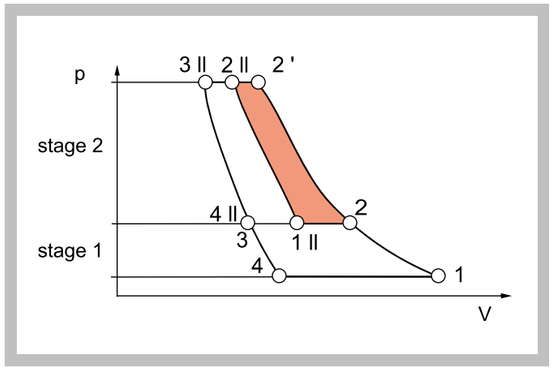

Two-stage compression process in p-V diagram
red: benefit compared to single-stage process

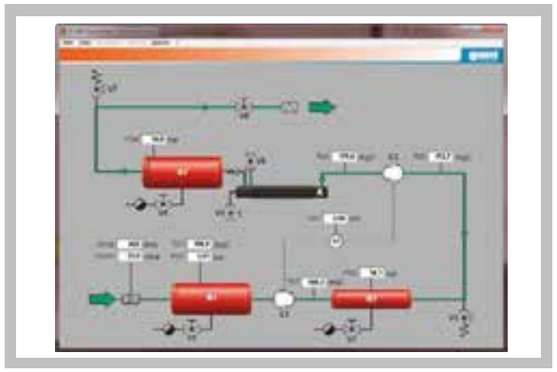

Software screenshot: process schematic of a two-stage piston compressor

Specification

[1] recording the characteristic of a two-stage compressor
[2] piston compressor with 2 cylinders in V-arrangement
[3] priming tank with nozzle to measure the intake volumetric flow rate, pressure sensor and additional manometer
[4] pressure vessel after the first stage as intercooler
[5] pressure vessel after the second stage with safety valve, blow-off valve and silencer as well as an additional manometer and a pressure switch
[6] sensors for pressures, temperatures and electric power output
[7] digital displays for temperatures, pressures, differential pressures and electric power output
[8] GUNT software for data acquisition via USB under Windows Vista or Windows 7

Technical Data

Compressor
- two-stage
- with 2 cylinders in a V-arrangement
- power consumption: 3kW
- speed: 710min^{-1}
- intake capacity: 250L/min
- quantity delivered: 202L/min (at 12bar)
- operating pressure: 12bar, max. 35bar

Priming tank: 20L
Pressure vessels, 16bar; capacity:
- after 1st stage: 5L
- after 2nd stage: 20L

Safety valve: 16bar

Measuring ranges
- differential pressure: 0...25mbar
- pressure: 1x 0...1,5bar / 2x 0...16bar
- temperature: 4x 0...200°C
- power: 0...3500W

Dimensions and Weight

LxWxH: 1550x800x1500mm
Weight: approx. 260kg

Required for Operation

400V, 50/60Hz, 3 phases or
230V, 60Hz/CSA, 3 phases

Scope of Delivery

1 trainer
1 GUNT software CD + USB cable
1 set of instuctional material

Order Details

061.50000 ET 500 Two-Stage Piston Compressor

G.U.N.T Gerätebau GmbH, Hanskampring 15-17, D-22885 Barsbüttel, Phone +49 (40) 67 08 54-0, Fax +49 (40) 67 08 54-42, E-mail sales@gunt.de, Web http://www.gunt.de
We reserve the right to modify our products without any notifications.

MT 140.02 Assembly Exercise: Piston Compressor

The illustration shows the tool box with parts set. The compartment insert for tools and small parts is shown in the foreground.

*** Practical assembly of an industrial compressor, using simple tools and jigs**

*** Broad scope of learning with interdisciplinary problems**

*** Comprehensive and well-structured instructional material**

Technical Description

The MT 140.02 kit contains all the parts required to construct the compressor. The compressor fits are designed so as to allow the complete assembly process to be carried out by hand. All parts are clearly laid out and well protected in a sheet-steel tool box. Small parts and tools are contained in a box with a transparent plastic lid.

The nature of this assembly exercise permits wide-ranging, and in particular, interdisciplinary work to be carried out by the students. The exercise is particularly well suited to action-based teaching, in conjunction with students working both independently and in teams.

The well-structured instructional materials set out comprehensive and in-depth technical information which forms the basis for the teaching process. The teaching material included consists of a complete set of drawings with parts lists, individual part drawings, an exploded view and assembly drawing. All drawings are to standard, and dimensioned in line with production requirements. The comprehensive set of transparencies for the overhead projector is another very useful feature.

The fully assembled compressor can be tested for functionality using the optionally available MT 140.01 test bed unit. Interactive learning software (MT 140.20) supports effective learning by means of graphics, animations and vocal support.

Learning Objectives / Experiments

- design and function of a compressor
- reading and understanding engineering drawings
- familiarisation with components and assemblies, their design features and functions
- dimensioning exercises, gauging of parts
- work planning, particularly planning and presentation of the assembly process
- familiarisation with assembly aids and jigs
- assembly exercises: component and complete unit assembly
- analysis of faults and damage, in conjunction with maintenance and repair steps
- material selection criteria

in conjunction with MT 140.01
- functional testing of the assembled compressor

MT 140.02 Assembly Exercise: Piston Compressor

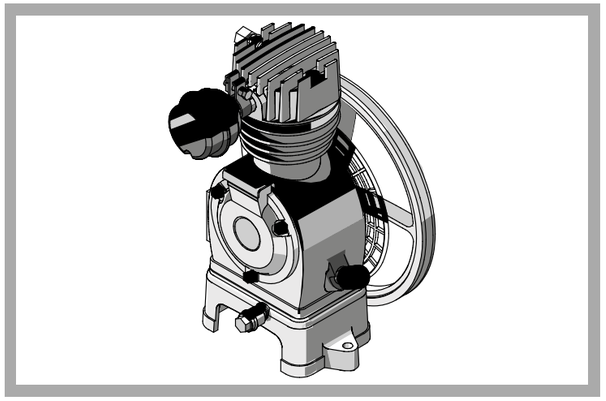

Three-dimensional view of the assembled compressor

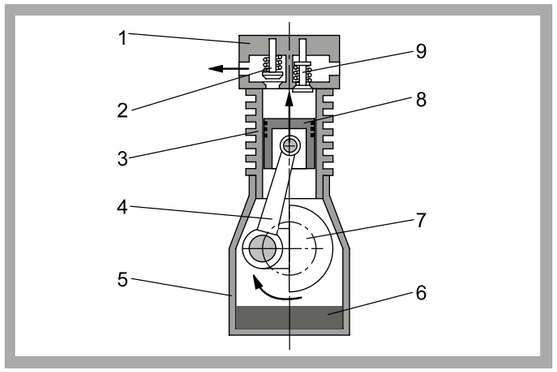

1 cylinder cover, 2 pressure valve, 3 cylinder, 4 connecting rod, 5 crankcase, 6 oil sump, 7 crankshaft, 8 piston, 9 intake valve

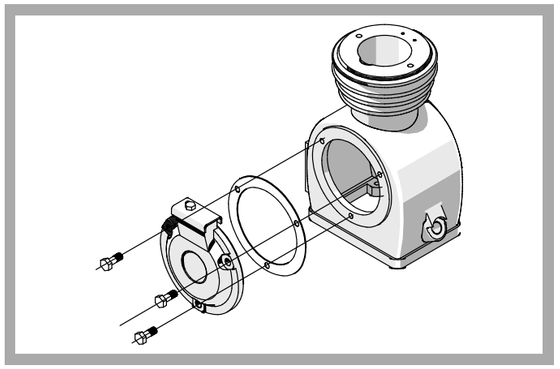

Assembly of the side cover

Specification

[1] assembly exercise for engineering training
[2] complete, disassembled piston compressor with small parts set and 6 assembly jigs in a storage case
[3] single-stage compressor, air-cooled, with fan flywheel, intake filter and pipe unions
[4] compressor consisting of piston and cylinder, housing, driving gear, cylinder cover with valves
[5] the kit forms part of the GUNT assembly, maintenance and repair practice line

Technical Data

Air-cooled single-cylinder piston compressor
- cylinder bore: 50mm
- stroke: 32mm
- displacement volume: 63cm³
- speed: 1850min^{-1}
- max. pressure: 10bar
- intake capacity: 115L/min
- drive power output: 700W
- dimensions, assembled, LxWxH: 223x256x314mm

Dimensions and Weight

LxWxH: 720x360x310mm (box)
Weight: approx. 28kg

Scope of Delivery

1 complete set of compressor parts
1 box for small and loose parts (e.g. bolts, circlips, washers)
1 set of gaskets
6 assembly jigs
1 set of assembly / disassembly tools
1 sheet-steel tool box with foam inlay
1 set of instructional material, consisting of
- technical description of system, complete set of drawings with individual parts and parts list, description of assembly and disassembly sequences, set of transparencies for overhead projector

Order Details

051.14002 MT 140.02 Assembly Exercise: Piston Compressor

G.U.N.T Gerätebau GmbH, Hanskampring 15-17, D-22885 Barsbüttel, Phone +49 (40) 67 08 54-0, Fax +49 (40) 67 08 54-42, E-mail sales@gunt.de, Web http://www.gunt.de
We reserve the right to modify our products without any notifications.

MT 140.01 Assembly Exercise Piston Compressor: Functional Test

The illustration shows MT 140.01 together with the compressor MT 140.02 under test.

*** Test device for the piston compressor assembly exercise from the parts sets MT 140.02 or MT 140**

*** Permits assessment of the assembly**

Technical Description

The MT 140.01 test device is used in conjunction with the piston compressor assembly exercises, MT 140.02 or MT 140. The fully assembled compressor is placed on the test device. Here the complete system is professionally assembled, including alignment of the motor and compressor. The electrical connection of the compressor can also be demostrated if required as part of the teaching process. A successfully completed assembly exercise can then be examined for operability using a formal test procedure. During the functionality test, the pressure rise in the tank and the current consumption of the drive motor are recorded over time.

The components of MT 140.01 are clearly laid out on a base plate. The unit contains an electric motor with belt pulley and protective screen. A switch box is included with displays and controls as well as a pressure vessel with display, safety valve and pressure switch. An ammeter on the switch box indicates the current consumption of the drive motor. The compressor being checked is installed on the test bed and connected to the drive motor via a belt drive.

Learning Objectives / Experiments

in conjunction with a piston compressor (MT 140 or MT 140.02)
- functional testing of a piston compressor
- pressure rise in tank over time
- current consumption of drive motor as function of pressure
- familiarisation with a compressed air generator and its components
- function and mode of operation of safety elements
  * safety valve
  * pressure switch
  * non-return valve
- professional installation of the compressor in the test device, including setting and alignment

MT 140.01 Assembly Exercise Piston Compressor: Functional Test

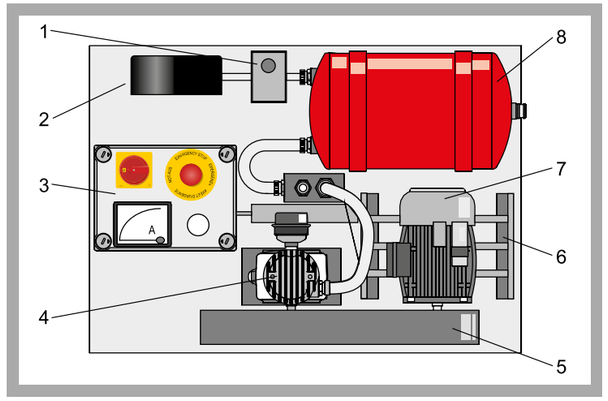

1 pressure switch, 2 manometer, 3 switch box with ammeter, 4 compressor MT 140, 5 belt guard, 6 motor carriage, 7 electric motor, 8 pressure vessel

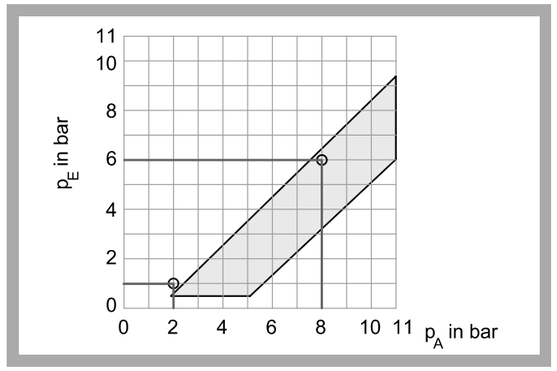

Pressure diagram of the pressure switch: p_E switch-on pressure, p_A switch-off pressure, grey area: permissible pressure switch values

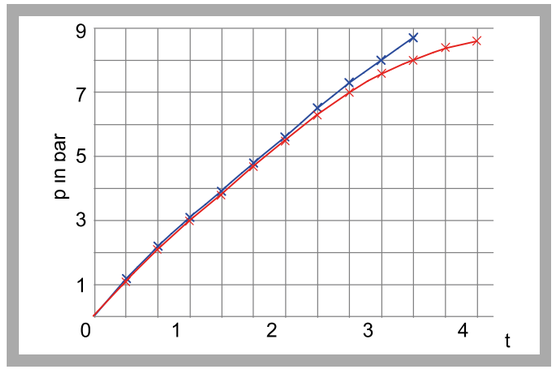

Tank pressure p in bar over pumping time t in minutes;
blue: good assembly, red: poor assembly

Specification

[1] unit for functionality testing of the piston compressor from assembly exercises MT 140.02 or MT 140
[2] driven by electric motor and belt drive
[3] single-phase electric motor on adjustable carriage
[4] pressure vessel with adjustable pressure switch and manometer
[5] switch box with controls and ammeter to indicate current consumption
[6] safety devices: pressure switch, safety valve, protective screen for belt drive, emergency-off switch
[7] the unit forms part of the GUNT assembly, maintenance and repair practice line

Technical Data

Single-phase motor
- power output: 250W
- speed: 1405min^{-1}

Pressure vessel
- capacity: 10L
- max. pressure: 10bar

Measuring ranges
- manometer: 0...16bar
- ammeter: 0...4A, class 2,5

Dimensions and Weight

LxWxH: 820x550x500mm
Weight: approx. 45kg

Required for Operation

230V, 50Hz, 1 phase or 120V, 60Hz, 1 phase

Scope of Delivery

1 experimental unit
1 stopwatch
1 set of assembly/disassembly tools
0,5L compressor oil
1 manual

Order Details

051.14001 MT 140.01 Assembly Exercise Piston Compressor: Functional Test

G.U.N.T Gerätebau GmbH, Hanskampring 15-17, D-22885 Barsbüttel, Phone +49 (40) 67 08 54-0, Fax +49 (40) 67 08 54-42, E-mail sales@gunt.de, Web http://www.gunt.de
We reserve the right to modify our products without any notifications.

VALVES AND FITTINGS: IMPORTANT ELEMENTS IN PIPELINES

Valves and fittings are piping elements whose primary function is to block or redirect mass flows. In addition, they are also used to adjust flow rates. The most common valves and fittings are plug valves, butterfly valves, valves and gate valves. Which valves and fittings are best for specific application areas depends on their mode of operation.

One example to illustrate the importance of valves and fittings in process engineering are redundant pumps. This means that two identical pumps are connected in parallel although only one pump is required for normal operation. If one pump fails, the valves and fittings redirect the conveyed medium to the other pump. This prevents a standstill of the affected section of the system. This principle is primarily used in very important system sections where it is particularly important that failures do not occur for safety reasons (e.g. cooling water).

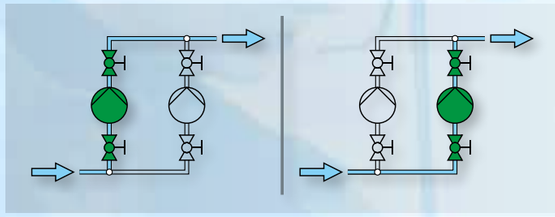

Redundant pumps: depending on the settings of the valves and fittings, either the right or the left pump is used.

Valves and fittings can be operated manually or automatically. Automation is sensible if the adjustment of a valve or fitting depends on a particular process variable. For example, sand filters for water treatment are normally equipped with automatic valves and fittings. When the pressure loss of the sand filter reaches a defined value, the process control system activates the valves in such a way that the sand filter can be backwashed against the direction of flow.

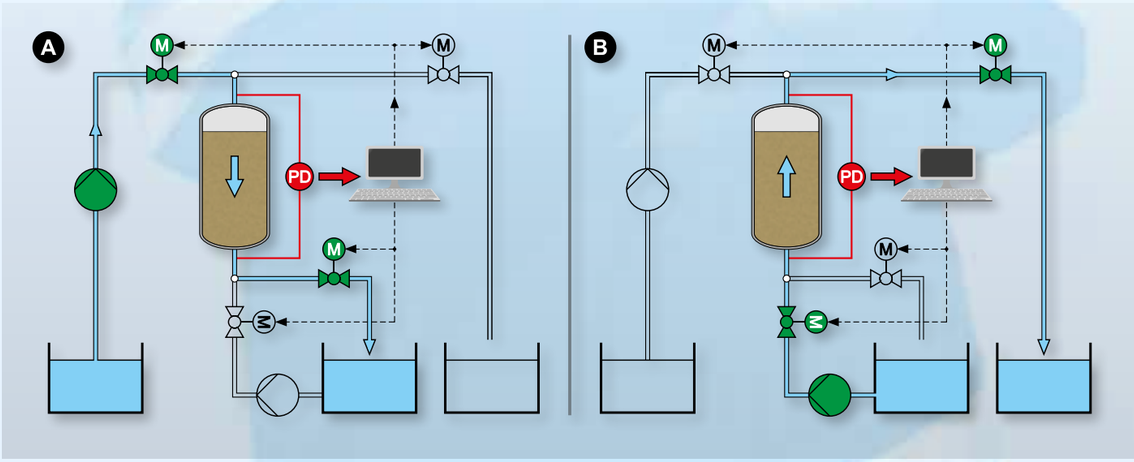

Automatic valves and fittings in water treatment (sand filter):
***A**: filtration, **B**: backwashing, **PD** pressure loss*

OUR PROVEN CONCEPT FOR LONG-TERM LEARNING SUCCESS

UNDERSTAND ▶ ASSEMBLE ▶ TEST

Cutaway model

Knowledge of the design of a valve or fitting is essential to understand the principle of its operation. Our sectional models enable students to “look inside” the valves and fittings. They provide a simple and clear overview of the design and operating principle of a valve or fitting. The functionality of moveable parts is fully retained in spite of the cut-outs.

The aim of the assembly exercises is to familiarise oneself with the design and proper assembly and disassembly of valves and fittings. This includes reading and understanding engineering drawings and assembly instructions.

- working in normal classrooms – no workshop environment required
- ideal for group work
- all exercises can easily be completed within a 45-minute lesson

Kit for assembly exercises

RT 396 ***Pump and Valves and Fittings Test Stand***

With our specially developed trainers, students can check the proper assembly of valves and fittings under realistic operating conditions. This includes, for example, pressure tests and leak tests. Here, too, our excellent instructional material supports you when planning and performing the exercises.

HM 700 CUTAWAY MODELS OF ORIGINAL PIPING COMPONENTS

HM 700.06 Cutaway Model: Angle Seat Valve

Commercial fittings as cutaway models

- familiarisation with real components and their functions
- detailed view and principle of operation of the components
- all fittings operate normally, the cuts do not hinder moving parts

The cutaway models from this series are actual fittings and components as used in real pipework installations, e.g. valves, an orifice plate, a measuring nozzle, shut-off fittings, a safety valve and pumps. The models from this series are clearly laid out on display panels or base plates.

A short description and a sectional view are included, so the models can also be used for technical drawing exercises.

HM 700.05 *Corner Valve*

LxWxH: 400x370x300mm,
Weight approx. 8 kg Product no. 070.70005

HM 700.06 *Angle Seat Valve*

LxWxH: 400x370x300mm,
Weight approx. 10 kg Product no. 070.70006

HM 700.07 *Non-Return Valve*

LxWxH: 500x370x400mm,
Weight approx. 15 kg Product no. 070.70007

HM 700.08 *Pressure Reducing Valve*

LxWxH: 500x370x400mm,
Weight approx. 15 kg Product no. 070.70008

HM 700.09 *Strainer*

LxWxH: 400x370x300mm,
Weight approx. 10 kg Product no. 070.70009

HM 700.10 *Gate Valve*

LxWxH: 400x370x300mm,
Weight approx. 10 kg Product no. 070.70010

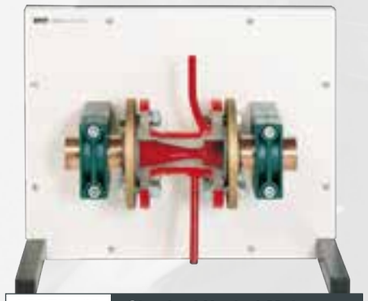

HM 700.03 *Standard Venturi Meter*

LxWxH: 500x370x400mm,
Weight approx. 18 kg Product no. 070.70003

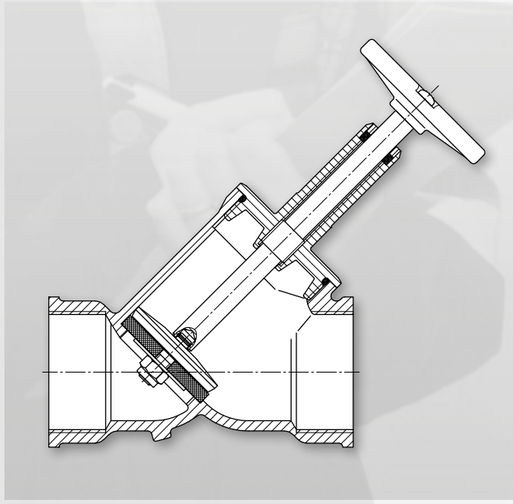

Sectional view of the Angle Seat Valve HM 700.06

HM 700.04 *Straight-Way Valve*

LxWxH: 400x370x300mm,
Weight approx. 8 kg Product no. 070.70004

HM 700.11 *Straight-Way Plug Valve*

LxWxH: 500x370x400mm,
Weight approx. 10 kg Product no. 070.70011

HM 700.12 *3-Way Plug Valve*

LxWxH: 500x370x400mm,
Weight approx. 20 kg Product no. 070.70012

ALSO AVAILABLE:

HM 700.01 *Standard Orifice Plate*
Product no. 070.70001

HM 700.02 *Flow Nozzle*
Product no. 070.70002

HM 700.13 *Ball Valve*
Product no. 070.70013

HM 700.14 *Safety Valve*
Product no. 070.70014

HM 700.15 *Various Screwed Pipe Connections*
Product no. 070.70015

Cutaway Models from Process Engineering

VS 107 Cutaway Model: Non-Return Butterfly Valve

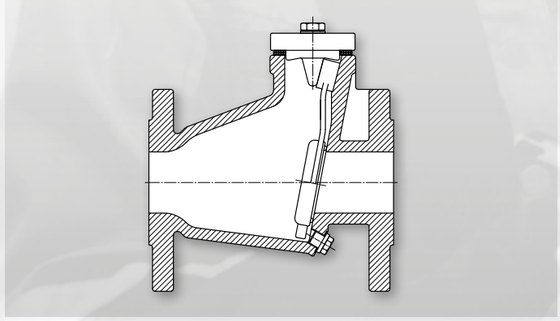

Sectional view of a non-return butterfly valve

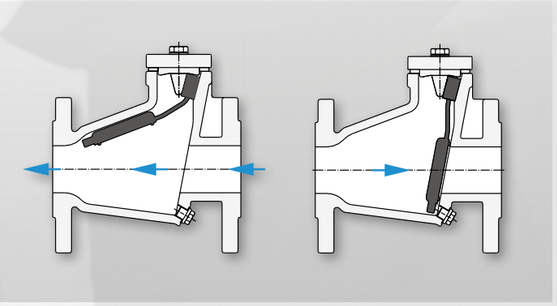

Functional principle of a non-return butterfly valve

Cutaway models from process engineering

- familiarisation with components and their functions
- view of the details and understanding the principle of operation
- moveable parts retain functionality

The cutaway models shown on the following page illustrate typical components used for process engineering, such as shut-off fittings, backflow prevention valves and strainers. These are mounted on vertical display panels.

A short description and a sectional view are included. In this way the models can also be used for technical drawing.

We always use original components from practice. The location of the cuts allow the design details to be clearly seen.

VS 102 *Resilient Seated Gate Valve*

L x W x H: 500 x 370 x 400 mm, Weight approx. 15 kg, Product no. 076.10200

VS 103 *Screw Down Valve*

L x W x H: 500 x 370 x 400 mm, Weight approx. 15 kg, Product no. 076.10300

VS 104 *Changeover Valve*

L x W x H: 500 x 370 x 400 mm, Weight approx. 20 kg, Product no. 076.10400

VS 106 *Backflow Preventer*

L x W x H: 500 x 370 x 400 mm, Weight approx. 15 kg, Product no. 076.10600

VS 107 *Non-Return Butterfly Valve*

L x W x H: 500 x 370 x 400 mm, Weight approx. 15 kg, Product no. 076.10700

VS 109 *Strainer*

L x W x H: 500 x 370 x 400 mm, Weight approx. 15 kg, Product no. 076.10900

MT 156 Assembly Exercise: Wedge Gate Valve and Angle Seat Valve

The illustration shows the tool box with parts sets and tools. In the foreground the valves and fittings as they are assembled from the parts sets.

*** Practical exercise based on the assembly of a wedge gate valve and an angle seat valve**

*** Comprehensive and well-structured instructional material**

Technical Description

Wedge gate valves are used as fittings for water, water vapour, oil and other non-aggressive liquids. Operating temperatures of up to 200°C are possible. Wedge gate valves in this design are operated by a hand-wheel turned spindle. During closing, the slider is pushed by the spindle nut into the sealing rings in the housing.

Angle seat valves are the typical fittings used in drinking water pipes. Angle seat valves are also used in many areas of industry. They are designed for neutral fluids and gaseous media. Stainless steel versions are suitable for mildly and highly aggressive media. The valves can be used for high flow rates, and are non-sensitive to lightly contaminated and high-viscosity media. The valve spindle is usually arranged at a 45° angle to the direction of flow. Angle seat valves generate substantially lower pressure loss than screw down valves or corner valves owing to the less tortuous flow path of the fluid.

The MT 156 practice kit forms part of the GUNT assembly, maintenance and repair practice line designed for training at technical colleges and in company training centres. A close link between theory and practice is key to the learning content.

MT 156 enables two typical industrially relevant valves and fittings to be assembled and disassembled. Students become familiar with all the components and their modes of operation. The parts are clearly laid out and well protected in a tool box. Systematic assembly and disassembly of the valves is practiced. The accompanying material details the individual steps involved in assembly, and provides additional information on the areas of application, mode of operation and design of the valves and fittings.

Learning Objectives / Experiments

- design and function of a wedge gate valve
- design and function of an angle seat valve
- assembly and disassembly, including for the purposes of maintenance and repair
- replacing components (e.g. seal)
- comparison of 2 different valves and fittings
- reading and understanding engineering drawings and operating instructions
- leak testing (together with hydraulic valves and fittings test stand MT 162)

MT 156 Assembly Exercise: Wedge Gate Valve and Angle Seat Valve

Assembly of the slider

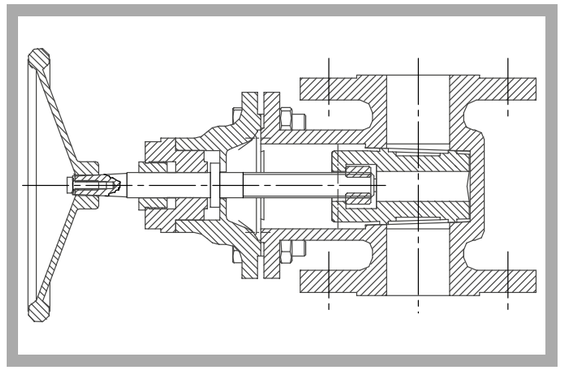

Sectional drawing of the wedge gate valve

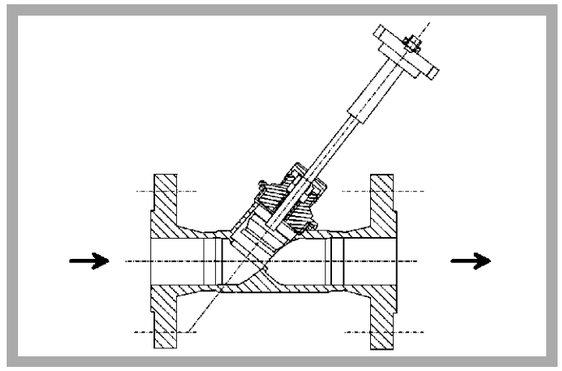

Sectional drawing of the angle seat valve

Specification

[1] learning concept for assembly exercises on valves and fittings
[2] wedge gate valve with hand wheel, as set of parts
[3] angle seat valve with manual drive, as set of parts
[4] complete assembly tool kit
[5] valve parts and tools housed in a sheet-steel tool box
[6] the kit forms part of the GUNT assembly, maintenance and repair practice line

Technical Data

Wedge gate valve with flange connections
- DN40, PN10
- materials
  housing, cover, taper: grey cast iron
  spindle, sealing surfaces of housing and taper: stainless steel
  packing rings: graphite

Angle seat valve with flange connections
- DN25, PN16
- materials
  housing: stainless steel
  metallic inner parts: stainless steel
  seals: PTFE

Dimensions and Weight

LxWxH: 720x360x310mm (box)
Weight: approx. 35kg

Scope of Delivery

1 complete set of wedge gate valve parts
1 set of replacement parts, consisting of:
- 3x flat seal
- 3x packing gland seal
- 2x packing gland

1 complete set of angle seat valve parts
1 seat seal for angle seat valve
1 set of tools, consisting of:
- 1 combination wrench, size 10
- 4 single-end wrenches: size 24, 30, 2x 17
- 2 open-ended wrenches: size 27, 50
- 1 Allen key, size 2,5

1 set of bolts, nuts, washers
3 rectangular boxes for small parts
1 sheet-steel tool box with foam inlay
1 set of instructional material, consisting of:
technical description of system, complete set of drawings with individual parts and parts list, description of assembly and disassembly processes, also in relation to repair operations

Order Details

051.15600 MT 156 Assembly Exercise: Wedge Gate Valve and Angle Seat Valve

G.U.N.T Gerätebau GmbH, Hanskampring 15-17, D-22885 Barsbüttel, Phone +49 (40) 67 08 54-0, Fax +49 (40) 67 08 54-42, E-mail sales@gunt.de, Web http://www.gunt.de
We reserve the right to modify our products without any notifications.

MT 157 Assembly Exercise: Butterfly Valve and Non-Return Valve

The illustration shows the tool box with parts sets and tools. In the foreground the valves and fittings as they are assembled from the parts sets.

*** Practical exercise based on the assembly of a butterfly valve and a non-return valve**

*** Comprehensive and well-structured instructional material**

Technical Description

Non-return valves are used where flow reversal is not permitted. They must fully seal off the reverse direction while offering the lowest possible resistance in the forward flow direction. If the differential pressure of the medium falls below the value as dictated by the spring force, the valve closes. Non-return valves are installed in pipelines, and must close if the pressure drops or if a high back-pressure occurs. They are largely maintenance-free and low-wearing.

Butterfly valves are installed in the pipelines of water supply pumping stations and filter systems; in power station cooling circuits; in the chemical industry for process water, including acidic and alkaline media; and in sewage treatment plants. They seal drip-tight like gate valves, and take up little space, as they are usually similar in size to the pipe cross-section.

Butterfly valves are constructed for ultra-large nominal widths (DN5300). Their operating pressure is normally in the range 4...16bar. Butterfly valves may be operated by hand, by electric motor via a spur gear segment or worm gear, or by a hydraulic piston. The valve is closed by rotating its shaft through 90°.

The MT 157 practice kit forms part of the GUNT assembly, maintenance and repair practice line designed for training at technical colleges and in company training centres. A close link between theory and practice is key to the learning content.

MT 157 enables two typical industrially relevant valves and fittings to be assembled and disassembled. Students become familiar with all the components and their modes of operation. The parts are clearly laid out and well protected in a tool box. Systematic assembly and disassembly of the valves and fittings is practiced. The accompanying material details the individual steps involved in assembly, and provides additional information on the areas of application, mode of operation and design of the valves and fittings.

Learning Objectives / Experiments

- design and function of a butterfly valve
- design and function of an a non-return valve
- assembly and disassembly, including for the purposes of maintenance and repair
- replacing components (e.g. seal)
- comparison of 2 different valves and fittings
- reading and understanding engineering drawings and operating instructions
- leak testing (together with hydraulic valves and fittings test stand MT 162)

MT 157 Assembly Exercise: Butterfly Valve and Non-Return Valve

Non-return valve, disassembled

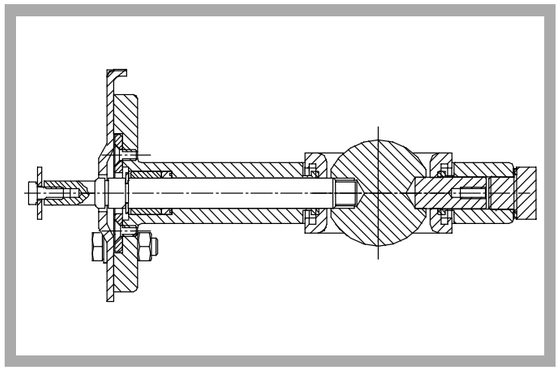

Sectional drawing of the butterfly valve

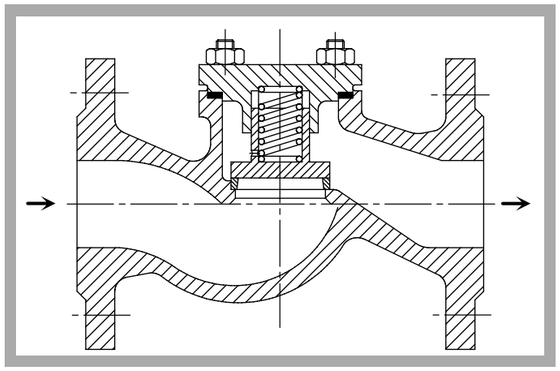

Sectional drawing of the non-return valve

Specification

[1] learning concept for assembly exercises on valves and fittings
[2] butterfly valve with manual adjuster, as set of parts
[3] typical non-return valve, as set of parts
[4] complete assembly tool kit
[5] valve parts and tools housed in a sheet-steel tool box
[6] the kit forms part of the GUNT assembly, maintenance and repair practice line

Technical Data

Butterfly valve with flange connections
- DN40, PN16
- materials
  housing: grey cast iron
  disk, shafts: stainless steel
  sleeve: rubber
  hand lever: aluminium
  bush: bronze

Non-return valve with flange connections:
- DN25, PN16
- materials
  housing: grey cast iron
  taper, spring: stainless steel
  flat seal: graphite

Dimensions and Weight

LxWxH: 720x360x310mm (box)
Weight: approx. 35kg

Scope of Delivery

1 complete set of butterfly valve parts
1 set of replacement parts, consisting of:
- 1 seal
- 1 sleeve
- 8 bolts M8x25

1 complete set of non-return valve parts
1 set of tools, consisting of:
- 3 single-end wrenches: size 10, 13, 22
- 1 Allen key, size 3
- 1 slotted screwdriver 5,5x1
- 1 set of circlip pliers
- 1 soft-faced hammer

2 rectangular boxes for small parts
1 sheet-steel tool box with foam inlay
1 set of instructional material, consisting of: technical description of system, complete set of drawings with individual parts and parts list, description of assembly and disassembly processes, also in relation to repair operations

Order Details

051.15700 MT 157 Assembly Exercise: Butterfly Valve and Non-Return Valve

G.U.N.T Gerätebau GmbH, Hanskampring 15-17, D-22885 Barsbüttel, Phone +49 (40) 67 08 54-0, Fax +49 (40) 67 08 54-42, E-mail sales@gunt.de, Web http://www.gunt.de
We reserve the right to modify our products without any notifications.

MT 158 Assembly Exercise: Ball Valve and Shut-off Valve

The illustration shows the tool box with parts sets and tools. In the foreground the valves and fittings as they are assembled from the parts sets.

*** Practical exercise based on the assembly of a ball valve and a shut-off valve**

*** Comprehensive and well-structured instructional material**

Technical Description

Shut-off valves, of the design presented here, are used to shut off and restrict the flow of media. They must be capable of complete flow shut-off. Closure of the valve should be such that the volumetric flow does not suddenly drop to zero in order to prevent shock loads. The valve taper is moved by the spindle and makes a metallic seal against the seating ring pressed into the housing. The spindle is sealed by a packing gland. The joint between the housing and the clamp cover is sealed by a flat seal.

Ball valves are used where media flows or pressures in pipelines need to be stopped quickly and easily, e.g. when valves and fittings are to be removed from a pressurised pipeline. They have a very low flow resistance when open, require little space due to the compact design, and have a self-cleaning sealing face. The sealing body is a ball with a cylindrical bore allowing full flow when the valve is fully open. The ball is rotated through 90° by way of a lever with spindle, enabling it to open or close the valve fully.

The practice kit MT 158 forms part of the GUNT assembly, maintenance and repair practice line designed for training at technical colleges and in company training centres. A close link between theory and practice is key to the learning content.

MT 158 enables two typical shut-off valves to be assembled and disassembled. Students become familiar with all the components and their modes of operation. The parts are clearly laid out and well protected in a tool box. Systematic assembly and disassembly of valves and fittings is practiced. The accompanying material details the individual steps involved, and provides additional information on the areas of application, mode of operation and design of the fittings.

Learning Objectives / Experiments

- design and function of a ball valve
- design and function of a shut-off valve
- assembly and disassembly, including for the purposes of maintenance and repair
- replacing components (e.g. seal)
- comparison of 2 different valves and fittings
- reading and understanding engineering drawings and operating instructions
- leak testing (together with hydraulic valves and fittings test stand MT 162)

MT 158 Assembly Exercise: Ball Valve and Shut-off Valve

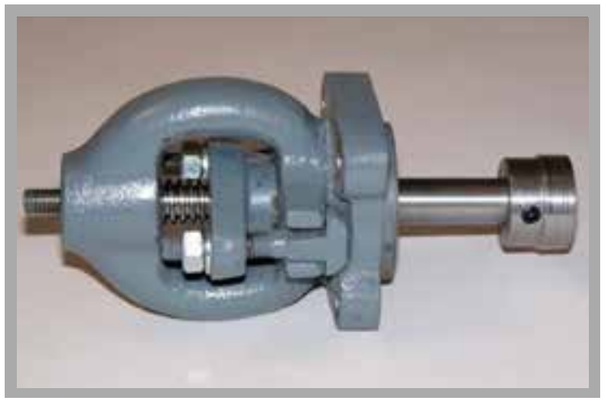

Assembly unit 2 of the shut-off valve, assembled

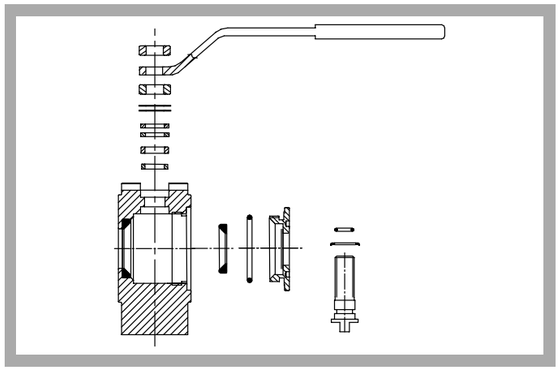

Assembly drawing of the ball valve

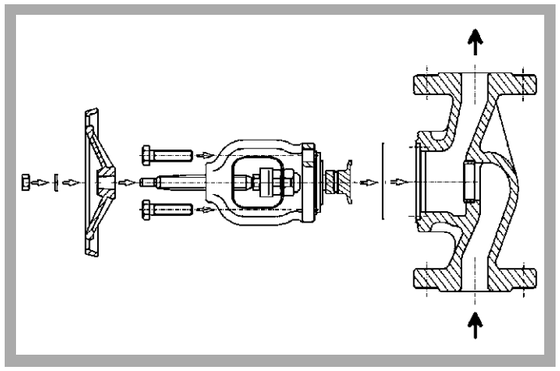

Assembly drawing of the shut-off valve

Specification

[1] learning concept for assembly exercises on valves and fittings
[2] shut-off valve, as set of parts
[3] 2-way ball valve, as set of parts
[4] complete assembly tool kit
[5] valve parts and tools housed in a sheet-steel tool box
[6] the kit forms part of the GUNT assembly, maintenance and repair practice line

Technical Data

Shut-off valve with flange connections
- DN25, PN16
- housing, hand wheel, clamp cover, packing gland frame: grey cast iron
- taper, seating ring, spindle, ring segment etc.: stainless steel

Ball valve with flange connections
- DN25, PN16
- housing: C22
- ball: brass
- spindle, lever, disks etc.: galvanized steel

Dimensions and Weight

LxWxH: 720x360x310mm (box)
Weight: approx. 35kg

Scope of Delivery

1 complete set of shut-off valve parts
1 set of replacement parts, consisting of:
- 2 packing glands for spindle sealing
- 16 steel balls for seating ring assembly
- 2 seals

1 complete set of ball valve parts
1 set of replacement parts, consisting of:
- 2 seal sets

1 set of tools, consisting of:
- 2 single-end wrenches: size 13, 17
- 1 Allen key, size 3
- 1 pin-type face wrench, adjustable
- 1 slotted screwdriver 5,5x1
- 1 punch
- 1 soft-faced hammer

1 set of nuts and bolts
2 rectangular boxes for small parts
1 sheet-steel tool box with foam inlay
1 set of instructional material, consisting of: technical description of system, complete set of drawings with individual parts and parts list, description of assembly and disassembly processes, also in relation to repair operations

Order Details

051.15800 MT 158 Assembly Exercise: Ball Valve and Shut-off Valve

G.U.N.T Gerätebau GmbH, Hanskampring 15-17, D-22885 Barsbüttel, Phone +49 (40) 67 08 54-0, Fax +49 (40) 67 08 54-42, E-mail sales@gunt.de, Web http://www.gunt.de
We reserve the right to modify our products without any notifications.

MT 162 Hydraulic Valves and Fittings Test Stand

The illustration shows MT 162 together with the gate valve from MT 156.

*** Mobile test stand for pressure testing of valves and fittings**

*** Final testing for the GUNT MT 154, MT 156, MT 157 and MT 158 assembly projects**

Technical Description

MT 162 is used for pressure testing of various types of valves and fittings. The unit can be used to test if the valve opens and closes easily under pressure, and if the housing and seals can withstand the test pressure. A manually operated piston pump draws water from the storage tank, fills the valve interior, and generates the test pressure. A manometer indicates the test pressure. The welded-in collector tray is fitted with a ball valve to allow it to be drained. The valve under test is attached to a mounting flange and sealed by a blank flange. The piston pump and mounting flange are interconnected via a pressure hose. The test stand includes its own storage tank so it can be operated independently of a water pipe supply. The tank must be topped up occasionally.

The test stand is used in particular for the final testing of the valves assembled and disassembled in the GUNT MT 154, MT 156, MT 157 and MT 158 assembly projects series. This ensures that a successfully completed assembly project can be examined for operability with a formal test procedure.

Learning Objectives / Experiments

the following experiments can be conducted together with valves and fittings, such as a wedge gate valve or angle seat valve (MT 156), butterfly valve or non-return valve (MT 157), ball valve or shut-off valve (MT 158)

- correct connection of valves to a flange coupling
- familiarisation with the terms "nominal pressure" and "test pressure"
- performing the final test for the GUNT MT 154, MT 156, MT 157 and MT 158 assembly projects
- checking the free movement of the valves and fittings
- pressure testing
  * leak testing of housing and flange seals
  * leak testing of the valve seat
- drafting a test report

MT 162 Hydraulic Valves and Fittings Test Stand

1 manometer, 2 mounting flanges with blank flange, 3 benchtop tray with drain, 4 pressure test pump with water tank, 5 hand lever, 6 hose

A	B
4bar	5.2bar
6bar	7.8bar
10bar	13.0bar
16bar	20.8bar
40bar	52.0bar

Column A: nominal pressure, column B: test pressure

Specification

[1] test stand on which to mount industrial valves and fittings
[2] pressure testing of valves and fittings
[3] hand-operated piston pump to generate the test pressure, a return valve to relieve the system pressure, and a manometer for pressure measurement
[4] 2 different sizes of mounting flange with blank flange and flange seal
[5] connection of pump and test flange via pressure hose
[6] test medium: water
[7] mobile frame with collector tray and ball valve to drain
[8] water storage tank
[9] the test stand forms part of the GUNT assembly, maintenance and repair practice line

Technical Data

Piston pump with tank
- test pressure: 0...60bar
- tank capacity: 12L
- manometer: 0...60bar

Mounting flanges for valves and fittings under test
- DN25
- DN40

Dimensions and Weight

LxWxH: 1000x750x1200mm
Weight: approx. 80kg

Scope of Delivery

1 test stand, complete with pump, tank, pressure hose
1 blank flange DN25 with flange seal
1 blank flange DN40 with flange seal
1 blank flange DN40 with spacer and flange seal for butterfly valve
1 set of bolts for flange connections
1 set of tools
1 instruction manual

Order Details

051.16200 MT 162 Hydraulic Valves and Fittings Test Stand

G.U.N.T Gerätebau GmbH, Hanskampring 15-17, D-22885 Barsbüttel, Phone +49 (40) 67 08 54-0, Fax +49 (40) 67 08 54-42, E-mail sales@gunt.de, Web http://www.gunt.de
We reserve the right to modify our products without any notifications.

HL 960 Assembly Station: Pipes and Valves and Fittings

*** Practically oriented assembly of real piping and system installations**

*** Detailed, practically-based familiarisation with system components**

Technical Description

HL 960 is a practical exercise and training system which provides an entirely authentic introduction to industrial pipes and valves and fittings. The assembly kit comprises a wide variety of valve and fittings, piping elements and one pressure tank, as well as sealing and fastening components. A sturdy U-shaped mounting frame permits assembly of a variety of piping systems, plant components and functional units. The piping elements are prepared ready for assembly, and matched to installation lengths and flange connections. The components permit multiple assembly and disassembly.

The training system is designed for students to work together in a learning group. The complete process of constructing a system may take several days if all the steps are followed: obtaining information, planning, deciding, executing, checking and assessing.

The detailed instructional material assists in creating an effective and ordered learning process. It contains technical descriptions of all the system components as well as various specimen systems and installations.

Finished set-ups can be subjected to real testing with water. The pump system HL 960.01 (closed circuit) is available for this purpose.

Learning Objectives / Experiments

- design and function of valves and fittings, piping elements and system components
- planning of piping and system installations according to specification, e.g. a process schematic
- selection of components and drafting of requirement lists
- technically correct preparation and execution of system assembly
- reading and understanding engineering drawings and technical documentation
- operational testing of the constructed systems (in conjunction with suitable water supply and disposal)

HL 960 Assembly Station: Pipes and Valves and Fittings

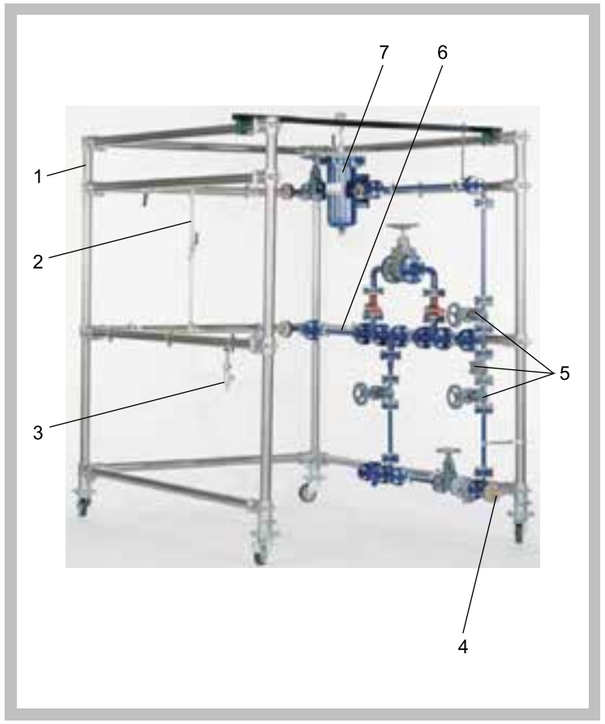

1 mobile frame, 2 DN15 pipe, 3 connection for HL 960.01 (outlet), 4 connection for HL 960.01 (inlet), 5 various valves and fittings, 6 DN25 pipe, 7 pressure vessel with manometer

The picture shows HL 960 with a completed specimen installation.
In the foreground: pump system HL 960.01.

Specification

[1] assembly exercise for engineering training
[2] piping network comprising pipe bends, elbows, T-pieces and transitions in nominal widths DN15, 25, 40
[3] pipe connections via flanges or cutting ring screw fittings
[4] standard commercially available flanged fittings: shut-off valve, non-return valve, strainer, condensation drain, inspection glass, ball valve, gate valve
[5] ball valve with cutting ring screw fitting
[6] pressure vessel with manometer, connection via DN15 flanges
[7] connection to water supply via hose with coupling
[8] mobile frame for mounting of pipe network
[9] the kit forms part of the GUNT assembly, maintenance and repair practice line

Technical Data

Flange fittings
- grey cast iron
- nominal pressure: PN16 for DN15, 25 / PN10 for DN40

Ball valve with cutting ring screw fitting
- brass, nickel-plated
- nominal pressure: PN25
- nominal size: G1/2"

Manometer: 0...4bar

Dimensions and Weight

LxWxH: 1540x1840x2020mm
Weight: approx. 300kg

Required for Operation

Water connection and drain via hoses with couplings

Scope of Delivery

1 frame
1 set of valves and fittings, pipes, piping elements with sealing and fastening material
1 set of tools
1 set of instructions, comprising drawing set and instructional material

Order Details

065.96000 HL 960 Assembly Station: Pipes and Valves and Fittings

G.U.N.T Gerätebau GmbH, Hanskampring 15-17, D-22885 Barsbüttel, Phone +49 (40) 67 08 54-0, Fax +49 (40) 67 08 54-42, E-mail sales@gunt.de, Web http://www.gunt.de
We reserve the right to modify our products without any notifications.

HL 960.01 Assembly and Alignment of Pumps and Drives

*** Installing a pump in a system**

*** Alignment of electric motor and pump by different methods**

Technical Description

A complete work process when repairing work machines such as pumps consists of the following steps: assembly – alignment – test. The trainer described here was designed with industrial conditions in mind and is primarily intended for the practical training of maintenance engineers. It also offers a variety of topics and starting points for training in vocational schools.

The HL 960.01 trainer enables students to practise the entire maintenance process. On its own, the trainer can be used for assembly exercises with the option of aligning the drive and the pump. Combined with HL 960 Assembly Station Pipes and Valves and Fittings, the HL 960.01 trainer can be used as a test system for the completely assembled piping system.

The trainer consists of an electric drive motor, a standard pump and a piping system with storage tank and can be operated independent of the water supply mains. Students can practise exchanging pumps for inspection or repair as part of the assembly exercise. The exercises cover the entire system and its individual subassemblies. A manometer displays the pressure on the delivery side of the pump.

The position of the electric motor can be adjusted in three directions for alignment purposes. The alignment can either be checked in a conventional manner with a straight edge or with the reverse alignment method using two dial gauges. Non-contact, microprocessor-aided methods can also optionally be used (specific alignment systems are not included in the scope of delivery).

The well-structured instructional material sets out the fundamentals and provides a step-by-step guide through the experiments.

Learning Objectives / Experiments

- installing a pump in a system
- connecting and aligning motor and pump
- familiarisation with various alignment methods: straight edge, dial gauges
- familiarisation with key system components
- electrical installation of motor and switching elements
- assembly of pipes and instrumentation
- detail installation on a standard centrifugal pump
- reading and understanding engineering drawings, product documentation and circuit diagrams
- familiarisation with maintenance procedures
- planning assembly and maintenance steps

in conjunction with HL 960
- operational testing in a pipe network

HL 960.01 Assembly and Alignment of Pumps and Drives

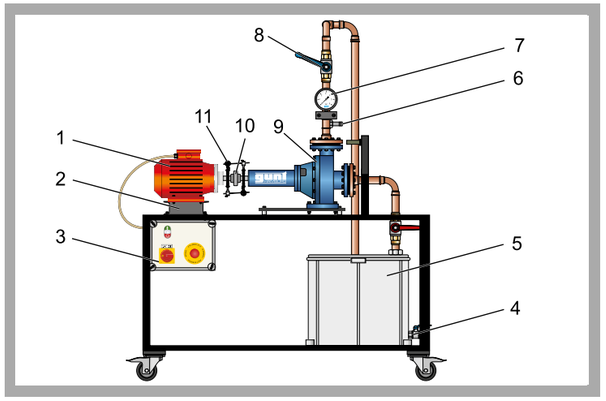

1 electric motor, 2 foundation for electric motor, 3 switch box, 4 HL 960 return connection, 5 storage tank, 6 HL 960 inlet connection, 7 manometer, 8 shut-off valve, 9 pump, 10 coupling

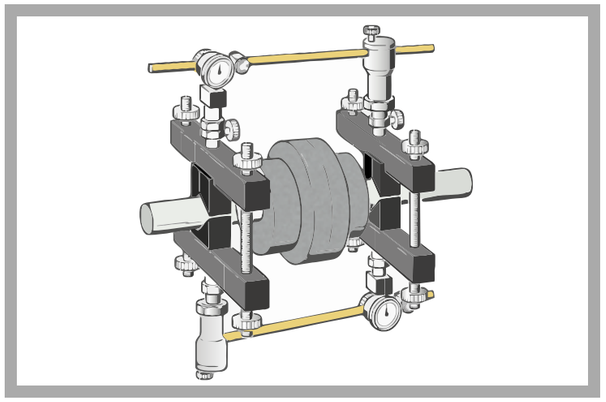

The illustration shows the principle of the dual radial dial gauge method of aligning shafts.

Specification

[1] mobile system for alignment of a standard pump and its drive motor
[2] asynchronous electric motor with constant speed
[3] electric motor with positioning frame and fit plates for alignment
[4] pump and motor connected via coupling
[5] checking of alignment using straight-edge or dial gauges
[6] manometer on pump delivery side
[7] pump with ball valves on intake and delivery side
[8] closed water circuit
[9] the system forms part of the GUNT assembly, maintenance and repair practice line

Technical Data

Centrifugal pump
- max. flow rate: 300L/min
- max. head: 16,9m
- power consumption: 750W

Asynchronous motor, single phase
- power output: 1100W
- speed: 3000min^{-1}

Storage tank: 96L

Measuring ranges
- dial gauges: 0...3mm / 0...20mm, resolution: 0,01mm
- manometer: 0...1,6bar

Dimensions and Weight

LxWxH: 1250x830x1160mm
Weight: approx. 122kg

Required for Operation

230V, 50/60Hz, 1 phase

Scope of Delivery

1 trainer with centrifugal pump and drive
1 set of measuring aids, consisting of
- 2 dial gauges 0...3mm
- straight-edge
- test shaft for sag measurement
- dial gauge with magnetic holder, 0...20mm

1 set of tools
1 set of instructional material

Order Details

065.96001 HL 960.01 Assembly and Alignment of Pumps and Drives

G.U.N.T Gerätebau GmbH, Hanskampring 15-17, D-22885 Barsbüttel, Phone +49 (40) 67 08 54-0, Fax +49 (40) 67 08 54-42, E-mail sales@gunt.de, Web http://www.gunt.de
We reserve the right to modify our products without any notifications.

RT 395 Maintenance of Valves and Fittings and Actuators

The illustration shows RT 395 with 3 of 4 fittings (segmented ball valve not shown).

*** Trainer for maintenance work on industrial valves and fittings**

*** Comparison of 4 different actuators**

Technical Description

Various types of valves and fittings are used in industry. They are suitable for gaseous and liquid media.

A distinction is made between valves, plug valves, gates and butterfly valves. Plug valves isolate a pipeline quickly, acting transverse to the flow. A quarter revolution is sufficient for full actuation. Valves adjust the flow rate and require several turns of the spindle for full opening or closing. Gates are not intended to seal off the pipeline completely, but serve to restrict the flow. When one of these valves and fittings is combined with a driving mechanism, the resulting control device is known as an actuator.

RT 395 presents three various types of valves and fittings. The trainer investigates the operating response of a segmented ball valve, a butterfly valve, a pneumatic control valve and a pressure reducing valve. The switch cabinet allows the necessary electrical and pneumatic parameters to be set to test and calibrate the valves and fittings. Instruments indicate pneumatic pressures, voltage and current. There is a vice on the workbench for maintenance and assembly work. The workbench also incorporates the necessary tools, and small parts such as seals, for the carrying out of testing procedures.

The well-structured instructional material sets out the fundamentals and provides a step-by-step guide through the experiments.

Learning Objectives / Experiments

- function and mode of operation of various valves and fittings
  - * pneumatic butterfly valve
  - * pneumatic segmented ball valve
  - * pneumatic control valve with electro-pneumatic positioner
  - * pressure reducing valve
- pneumatic connection
- electrical connection
- familiarisation with linear and equal-percentage valve characteristics
- planning, execution and assessment of maintenance and repair operations
- reading and understanding engineering drawings and operating instructions

RT 395 Maintenance of Valves and Fittings and Actuators

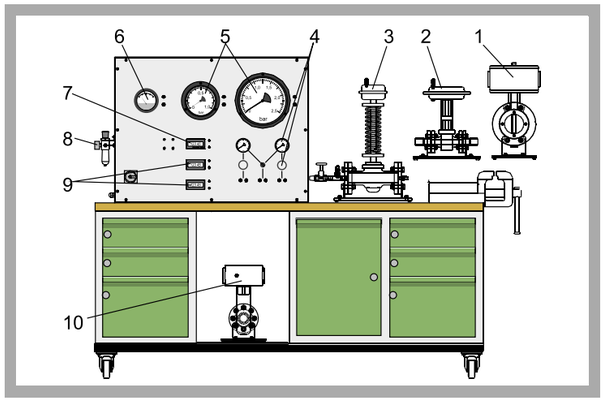

1 butterfly valve, 2 pneumatic control valve, 3 pressure reducing valve, 4 fine pressure regulator with manometer, 5 manometer, 6 differential pressure meter, 7 display of adjustable current source, 8 compressed air maintenance unit, 9 digital displays for voltage and current, 10 segmented ball valve

Segmented ball valve with single-action pneumatic swivel drive

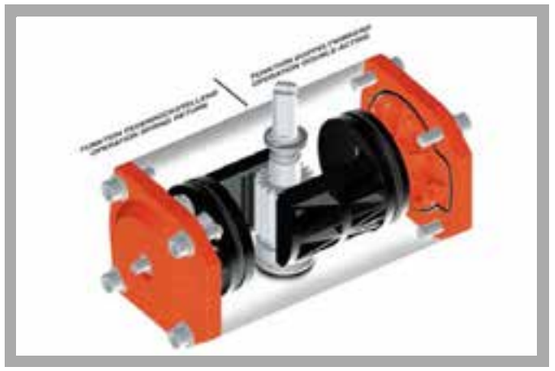

Principle of a swivel drive
left: spring-return; right: dual-action

Specification

[1] maintenance work on industrial valves and fittings
[2] pneumatic control valve with electro-pneumatic positioner DN25 / PN16
[3] butterfly valve with swivel drive DN100 / PN16
[4] pressure reducing valve DN15 / PN16
[5] segmented ball valve with swivel drive DN40 / PN16
[6] 2 compressed air ranges, adjustable by fine pressure regulator
[7] instrumentation: analogue pressure meter, digital ammeter and voltmeter
[8] electric signal transmitter for positioner in the form of an adjustable current source
[9] the trainer forms part of the GUNT assembly, maintenance and repair training line

Technical Data

Pneumatic swivel drive
- single-action with spring return

Measuring ranges
- pressure (bourdon tube manometer)
  0...1,0bar (D=160mm)
  0...1,6bar (D=60mm, fine pressure regulator)
  0...2,5bar (D=250mm)
  0...6,0bar (D=60mm, fine pressure regulator)
- differential pressure: 0...10kPa
- current (digital display): 0...20mA
- voltage (digital display): 0...20VDC

Dimensions and Weight

LxWxH: 2200x750x1660mm
Weight: approx. 321kg

Required for Operation

230V, 50/60Hz, 1 phase or 120V, 60Hz/CSA, 1 phase
Compressed air connection: 8bar

Scope of Delivery

1 workshop trolley with cabinets under and switch cabinet
1 butterfly valve
1 pneumatic control valve
1 pressure reducing valve
1 segmented ball valve
1 manometer
1 set of cables
1 set of compressed air hoses
1 set of tools and small parts (bolts, seals etc.)
1 set of instructional material

Order Details

080.39500 RT 395 Maintenance of Valves and Fittings and Actuators

G.U.N.T Gerätebau GmbH, Hanskampring 15-17, D-22885 Barsbüttel, Phone +49 (40) 67 08 54-0, Fax +49 (40) 67 08 54-42, E-mail sales@gunt.de, Web http://www.gunt.de
We reserve the right to modify our products without any notifications.

RT 396 Pump and Valves and Fittings Test Stand

*** Plotting characteristics of industrial valves and fittings**

*** Comparison of different valves and fittings**

*** Characteristics of a centrifugal pump**

Technical Description

RT 396 allows the characteristics of different valves and fittings to be compared. The typical kinds of valves and fittings are represented by a ball valve, a butterfly valve, a gate valves, a shut-off valve and a control valve. A safety valve and a dirt trap are also investigated. All valves and fittings are flanged, and can be installed in a pipe section with variable length. The pipe section is part of a closed water circuit. Pressure measurement points upstream and downstream of the valve and fitting under test are linked by a differential pressure manometer. This manometer is fitted with a pressure switch which activates a warning lamp if the pressure difference becomes excessive, such as when the filter is clogged. An electromagnetic flow rate sensor permits precise recording of the flow rates.

The closed water circuit contains three butterfly valves, to isolate the pump, and to adjust the pressure upstream and downstream of the test fitting. Differential pressures across the pump and test fitting, the power consumption and speed of the pump, and the flow rate and opening angle of the control valve are recorded and displayed. The measured data can also be used to plot pump characteristics.

A vice is included, on a separate workbench, for maintenance and assembly work. The workbench also incorporates the necessary tools and connecting hoses.

The well-structured instructional material sets out the fundamentals and provides a step-by-step guide through the experiments.

Learning Objectives / Experiments

- characteristics of a centrifugal pump
- behaviour during operation and function of
  - * ball valve
  - * butterfly valve
  - * shut-off valve
  - * wedge gate valve
  - * control valve
  - * safety valve
  - * dirt trap
- valve characteristics
- determining the Kvs value of the control valve
- pressure losses at the dirt trap depending on the filter and its load
- planning, execution and assessment of maintenance and repair operations
- reading and understanding engineering drawings and operating instructions

RT 396 Pump and Valves and Fittings Test Stand

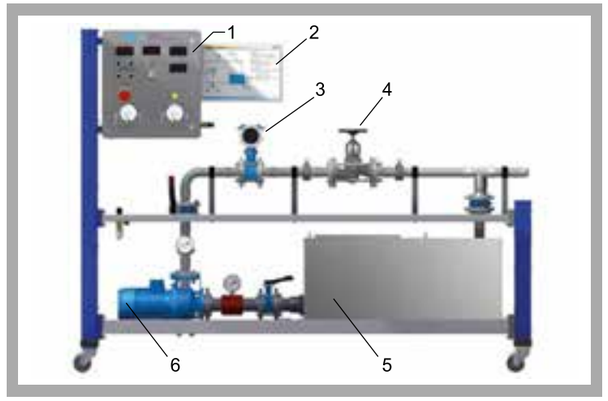

1 switch cabinet with displays and controls, 2 process schematic, 3 flow rate sensor, 4 pipe section with place for test fitting, 5 supply tank, 6 pump

Supplied valves and fittings: 1 dirt trap, 2 ball valve, 3 safety valve, 4 butterfly valve, 5 shut-off valve, 6 wedge gate valve, 7 control valve

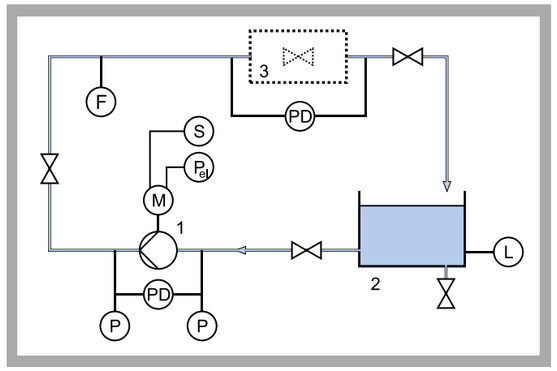

1 pump, 2 tank, 3 test fitting; sensors: E power, F flow rate, L level, P pressure, PD differential pressure, S speed

Specification

[1] trainer for testing various valves and fittings
[2] installation of the test fitting in a pipe section of variable length
[3] centrifugal pump with variable speed via frequency converter
[4] fine pressure regulator adjusts compressed air pressure
[5] tank cover as collecting tray under test device
[6] manometers in intake and delivery pipe of centrifugal pump
[7] pressure measuring points upstream and downstream of test device for differential pressure manometer with pressure switch
[8] digital displays for flow rate, power output, speed, position of control valve

Technical Data

Centrifugal pump
- power consumption: 4kW
- max. flow rate: 72m³/h
- max. head: 26,5m
- speed: 1450...2900min^{-1}

Supply tank with cover: capacity: 400L
Test valves and fittings:
- safety valve 1", 1,5bar
- shut-off valve DN50 / PN16
- ball valve with pneumatic drive DN50
- butterfly valve DN50 / PN16
- wedge gate valve DN50 / PN16
- electric control valve DN50 / PN16
- dirt trap DN50 / PN16 with 2 filter elements

Measuring ranges
- differential pressure manometer: 0...2,5bar / 0...4bar
- manometer: 0...4bar / -1...0,6bar
- flow rate: 35...1100L/min
- opening range of control valve: 0...100%
- power output: 0...4000W
- speed: 0...2900min^{-1}

Dimensions and Weight

LxWxH: 2510x790x1900mm (test stand)
Weight: approx. 245kg (test stand)
LxWxH: 1200x670x1100mm (workbench)
Weight: approx. 100kg (workbench)

Required for Operation

400V, 50/60Hz, 3 phases
Compressed air supply 8bar

Scope of Delivery

1 trainer with centrifugal pump
1 control valve, 1 dirt trap, 1 safety valve, 1 shut-off valve, 1 ball valve, 1 butterfly valve, 1 wedge gate valve
1 workbench with tools and hoses
1 set of instructional material

Order Details

080.39600 RT 396 Pump and Valves and Fittings Test Stand

2E a division of G.U.N.T Gerätebau GmbH, P.O.Box 1125, D-22885 Barsbüttel, t +49 (40)67 08 54-0, f +49 (40)67 08 54-42, E-mail sales@gunt.de
We reserve the right to modify our products without any notifications. **Visit our Websites: www.gunt.de | www.gunt2e.de**

HL 962 ASSEMBLY AND MAINTENANCE EXERCISES: PIPES, FITTINGS, PUMPS

HL 962 *Assembly Stand for Pumps*

HL 962.01 *Standard Chemicals Pump*

HL 962.02 *Canned Motor Pump*

HL 962.03 *Side Channel Pump*

HL 962.04 *Standard Chemicals Pump with Magnetic Clutch*

HL 962.32 *Set of Connecting Lines*

Set of pipes, fittings and connecting elements, adapted to the ordered configuration.

HL 962.30 *Tank System*

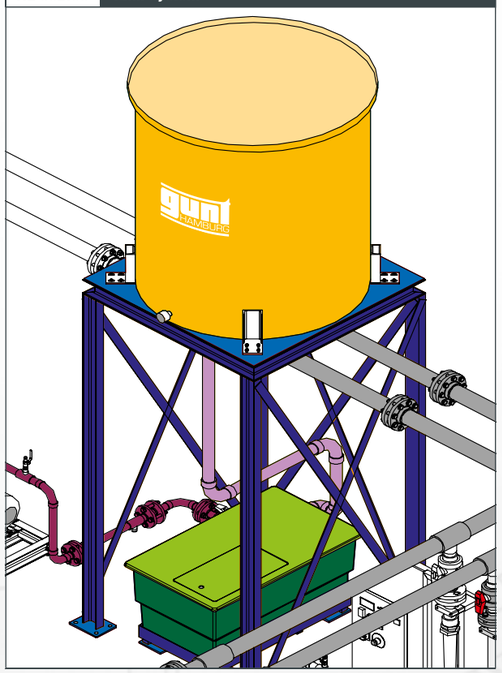

The practice and training system is based entirely on industrial technologies. It presents a complex project task for the training of piping and plant fitters as well as for maintenance mechanics. The planning and practical procedures may take several days.

The training system is particularly suitable for action-oriented project work in small groups of students. Detailed technical documentation, allied to didactic instruction, forms the basis for a successful learning process.

The HL 962 assembly stand for pumps is the main element of the training system. It can facilitate the installation of different centrifugal pumps (HL 962.01 – HL 962.04) and also provides the drive. Other key subassemblies are the tank installation for water supply (HL 962.30) and the piping system, constructed with the set of pipework and connection elements (HL 962.32). This then creates a complete system with a closed water circuit.

Multiple assemblies with identical or different pumps can be integrated into the network.

LEARNING CONTENT

- Planning and construction of a complex piping and pump system to transport water
- Configuration and modification of the complete system
- Familiarisation with plant components:
  - different pumps and their drive systems
  - components of piping systems
  - fittings, connecting and sealing elements, measuring devices
- Different connecting techniques in piping construction, assembly techniques, assembly aids
- Electrical connections of a pump drive and control, display and operating components
- Aligning the pump and drive motor
- Operational measurements in piping and pump systems
- Familiarisation with different materials utilised in the manufacture of plant equipment
- Maintenance tasks and operations
- Reading and understanding technical documents, such as drawings, schematic diagrams, or original operating instructions
- Familiarisation with commissioning procedures

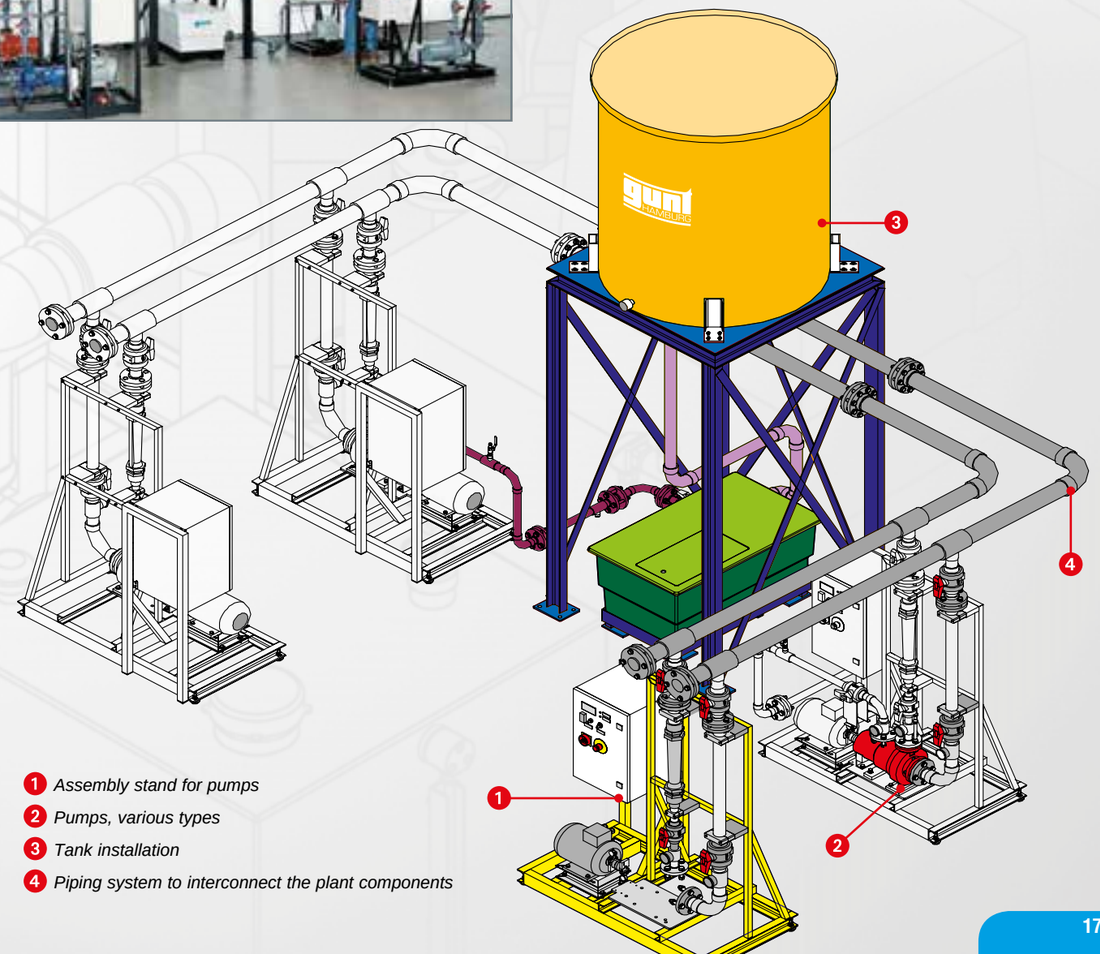

1. *Assembly stand for pumps*
2. *Pumps, various types*
3. *Tank installation*
4. *Piping system to interconnect the plant components*

HL 962 Assembly Stand for Pumps

The illustration shows a similar unit.

*** Mounting of different pumps (available as accessories)**

*** Alignment of motor and pump by different methods**

*** Base unit when constructing a complex piping system**

Technical Description

The individual steps for repairing work machines such as pumps are: removal and installation of pumps for inspection, repair or replacement; aligning the drive and commissioning and checking the pump, e.g. for leaks.

In conjunction with the HL 962.30 tank system, the HL 962.32 connecting pipes and one of the four HL 962.01 – HL 962.04 pumps, the HL 962 assembly stand forms a complete training system for complex piping and plant systems. The training system forms a closed water circuit.

The assembly stand HL 962 includes a three-phase asynchronous motor with frequency converter as the drive and an intake pipe and a delivery pipe with valves to adjust the pressure. A pump from the accessory equipment is attached to the base plate of the assembly stand and connected to the drive and the intake and delivery pipes. The pumps that are available as accessories are typical centrifugal pumps used in process engineering.

The position of the asynchronous motor can be adjusted in three directions for alignment purposes. The alignment can either be checked in a conventional manner with a straight edge or with the reverse alignment method using two dial gauges. Non-contact, microprocessor-aided methods can also optionally be used (specific alignment systems are not included in the scope of delivery).

Manometers in the intake pipe and the delivery pipe display the pressures upstream and downstream of the pump. The flow rate is measured with a rotameter. Speed and power output of the motor are indicated on digital displays.

The well-structured instructional material sets out the fundamentals and provides a step-by-step guide through the experiments.

Learning Objectives / Experiments

in conjunction with an accessory pump (standard chemicals pump HL 962.01, canned motor pump HL 962.02, side channel pump HL 962.03, standard chemicals pump with magnetic clutch HL 962.04) and a suitable water supply, e.g. HL 962.30 with HL 962.32

- mounting of the pump and alignment of the electric motor
- familiarisation with various methods of aligning the motor and pump
- commissioning and leak testing
- recording a pump characteristic
- comparison of various pump types (only if multiple pumps are available)

HL 962 Assembly Stand for Pumps

1 flange connections to connect HL 962 to HL 962.30, 2 switch box with displays and controls, 3 electric motor, 4 mounting plate for test pump, 5 flange connections for test pump, 6 manometer, 7 valve, 8 flow meter

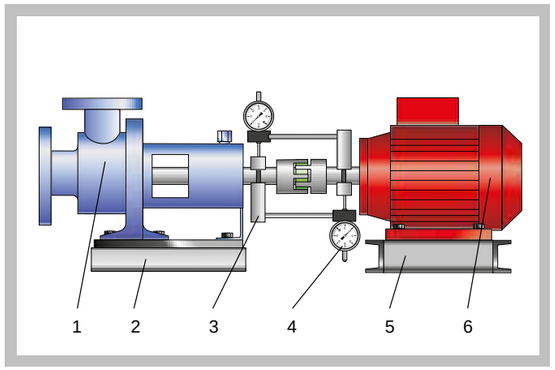

1 HL 962.01 pump, 2 pump base plate, 3 bracket for dial gauge, 4 dial gauge, 5 motor base plate, 6 electric motor

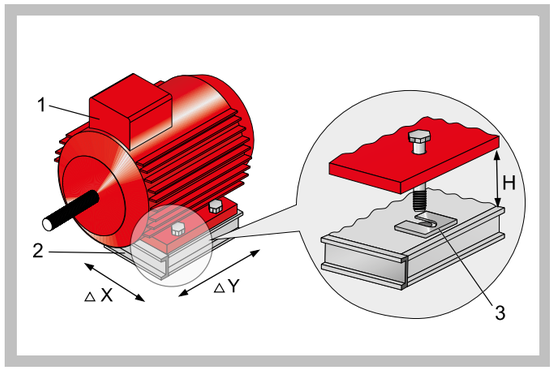

Aligning the electric motor (height, x and y direction):
1 electric motor, 2 base plate, 3 fitting plates to adjust the height H

Specification

[1] stand for mounting of various pumps
[2] asynchronous motor with variable speed via frequency converter
[3] electric motor with positioning frame and fit plates for alignment
[4] base plate prepared for mounting of various pumps
[5] alignment of motor and pump with straight-edge or by dial gauges
[6] switch box with speed adjuster and digital display of speed and power output
[7] frame with adjustable feet for levelling
[8] PVC piping
[9] water supply from tank system HL 962.30
[10] the system forms part of the GUNT assembly, maintenance and repair practice line

Technical Data

Three-phase AC asynchronous motor
- power output: 4kW, speed range: 0...1450min^{-1}

Connecting flanges for water supply
- intake side: DN50
- delivery side: DN50
- intake side channel pump: DN32

Fit plates as motor chocks
- 43x43mm
- 4 different thicknesses: 0,1-0,2-0,5-1,0mm, 20 of each

Measuring ranges
- intake pressure manometer: -1...1bar
- delivery pressure manometer: 0...16bar
- rotameter: 0...11m³/h
- speed: 0...3000min^{-1}
- power meter: 0...4kW
- dial gauge: 0...3mm, resolution: 0,01mm

Dimensions and Weight

LxWxH: 1300x750x1800mm
Weight: approx. 220kg

Required for Operation

400V, 50/60Hz, 3 phases or 230V, 60Hz, 1 phase

Scope of Delivery

1 assembly stand
1 set of tools
1 set of measuring aids: 2 dial gauges with attachment, 1 straight-edge
80 fit plates, differing thicknesses
1 set of instructional material

Order Details

065.96200 HL 962 Assembly Stand for Pumps

G.U.N.T Gerätebau GmbH, Hanskampring 15-17, D-22885 Barsbüttel, Phone +49 (40) 67 08 54-0, Fax +49 (40) 67 08 54-42, E-mail sales@gunt.de, Web http://www.gunt.de
We reserve the right to modify our products without any notifications.

HL 962.01 *Standard Chemicals Pump*

*** Centrifugal pump according to ISO 5199 as accessory for installation in assembly stand HL 962**

Technical Description

The standard pump used here is a centrifugal pump commonly used in the chemical and process engineering industries. The media being carried are often corrosive, toxic, explosive or volatile, or are carried at very high or very low temperatures. This places extreme stress on the pump.

The standard pump is a single-stage spiral casing pump in process configuration. The process configuration ensures quick and easy exchanging of wearing parts. The spiral housing is the most common design for single-stage pumps. Its design is precisely adapted to the flow of the pump. This enables the optimum efficiency levels to be attained. The hydraulic design and connecting dimensions of the pump conform to ISO 2858; the technical requirements are to ISO 5199.

Learning Objectives / Experiments

in conjunction with HL 962, HL 962.30 and HL 962.32
- operation of a standard pump
- recording the pump characteristic
- leak testing
- alignment of pump and drive motor

Scope of Delivery

1 pump, 1 instruction manual

Specification

[1] centrifugal pump as accessory for installation in HL 962
[2] drive and water supply provided by HL 962
[3] process configuration permits easy exchange of wearing parts
[4] pump hydraulic design according to ISO 2858
[5] pump technical requirements according to ISO 5199

Technical Data

Centrifugal pump (at nominal speed: 1450min^{-1})
- max. flow rate: 9,5m³/h
- max. head: 9,5m
- power consumption: 0,5kW

Connecting flange
- delivery side: DN32
- intake side: DN50

Materials
- housing, impeller: grey cast iron
- shaft: stainless steel

Dimensions and Weight

LxWxH: 570x240x300mm
Weight: approx. 43kg

Order Details

065.96201 HL 962.01 Standard Chemicals Pump

HL 962.02 *Canned Motor Pump*

*** Hermetic centrifugal pump, particularly suitable for pumping liquid gases**

*** Accessory for installation in assembly stand HL 962**

Technical Description

Canned motor pumps are used primarily in process engineering to pump aggressive, toxic, fire-hazard, explosive, delicate or volatile liquids (such as liquid gases). They are also suitable for pumping extremely hot or cold products, and liquids under high system pressure or under vacuum.

The pump is a fully self-contained centrifugal pump with no shaft seal, the drive is provided electro-magnetically via the canned motor. Its design means it is completely leak-tight and largely maintenance-free. Part of the primary flow is branched off by way of a self-cleaning filter to cool the motor and lubricate the journal bearings, and to provide hydraulic compensation for the axial thrust. After passing through the hollow shaft and the rotor chamber, the cooling medium is returned to the primary flow on the delivery side.

Learning Objectives / Experiments

in conjunction with HL 962, HL 962.30 and HL 962.32
- operation of a canned motor pump
- recording the pump characteristic
- leak testing

Scope of Delivery

1 pump, 1 instruction manual

Specification

[1] hermetic pump for aggressive liquids
[2] accessory for installation in HL 962
[3] drive: three-phase squirrel-cage motor
[4] water supply provided by HL 962
[5] maintenance-free pump

Technical Data

Canned motor pump
- max. flow rate: 12m³/h
- max. head: 39m
- power consumption: 3kW
- nominal speed: 2900min^{-1}

Connecting flange
- delivery side (radial): DN32
- intake side (axial): DN50

Dimensions and Weight

LxWxH: 510x240x305mm
Weight: approx. 62kg

Required for Operation

400V, 50Hz, 3 phases

Order Details

065.96202 HL 962.02 Canned Motor Pump

HL 962.03 *Side Channel Pump*

The illustration shows the pump with a fitting from HL 962.30 on the intake (grey elbow + manometer).

*** Self-priming three-stage centrifugal pump**

*** Accessory for installation in assembly stand HL 962**

Technical Description

Side channel pumps are self-priming centrifugal pumps, and are in widespread use. They can attain relatively high pressures at low flow rates. They are able to intake and deliver liquids containing gases. The pump can be started even when there is no head of liquid in the intake pipe. The side channel stage removes the air from the intake pipe and generates the necessary suction to intake the liquid.

The pump used here is three-stage. Drive and water supply are provided by the assembly stand HL 962.

Learning Objectives / Experiments

in conjunction with HL 962, HL 962.30 and HL 962.32
- operation of a side channel pump
- recording the pump characteristic
- leak testing
- alignment of pump and drive

Scope of Delivery

1 pump, 1 instruction manual

Specification

[1] three-stage self-priming pump for installation in HL 962
[2] drive and water supply provided by HL 962
[3] pump can intake and deliver air/water mixture
[4] relatively high head at low flow rate

Technical Data

Side channel pump
- 3 stages
- max. flow rate: 4,5m³/h
- max. head: 122m
- power consumption: 3kW
- nominal speed: 1450min^{-1}
- max. speed: 1800min^{-1}

Connecting flange
- delivery side: DN32
- intake side: DN50

Materials
- housing: grey cast iron
- shaft: stainless steel

Dimensions and Weight

LxWxH: 470x220x240mm
Weight: approx. 30kg

Order Details

065.96203 HL 962.03 Side Channel Pump

HL 962.04 *Standard Chemicals Pump with Magnetic Clutch*

*** Hermetic centrifugal pump according to ISO 5199**

*** Accessory for installation in assembly stand HL 962**

Technical Description

Magnetic drive pumps are used primarily in process engineering to pump aggressive, toxic and flammable liquids. Leakage of such liquids could result in major problems. Its design means it is completely leak-tight, even at continuous operation and under difficult usage conditions.

The viscosity of the delivered liquid is a key criterion in selecting a pump, as it determines the coupling torque to be transmitted. The torques transmitted by magnetic couplings are limited. As a result, magnetic drive pumps are not suitable for all operating conditions and media.

The pump is a fully self-contained centrifugal pump with no shaft seal. It is fitted with a permanent-magnetic synchronous drive complete with clutch. Drive and water supply are provided by the assembly stand HL 962.

Learning Objectives / Experiments

in conjunction with HL 962, HL 962.30 and HL 962.32
- operation of a standard chemicals pump with magnetic clutch
- recording the pump characteristic
- leak testing
- alignment of pump and drive

Scope of Delivery

1 pump, 1 instruction manual

Specification

[1] single-stage centrifugal pump with magnetic clutch as accessory for installation in HL 962
[2] drive and water supply provided by HL 962
[3] permanent-magnetic synchronous drive inside pump
[4] pump technical requirements according to ISO 5199

Technical Data

Pump (at nominal speed: 2900min^{-1})
- max. flow rate: 12m³/h
- max. head: 39m
- power consumption: 3,7kW

Connecting flange
- delivery side: DN32
- intake side: DN50

Dimensions and Weight

LxWxH: 625x240x300mm
Weight: approx. 60kg

Order Details

065.96204 HL 962.04 Standard Chemicals Pump with Magnetic Clutch

G.U.N.T Gerätebau GmbH, Hanskampring 15-17, D-22885 Barsbüttel, Phone +49 (40) 67 08 54-0, Fax +49 (40) 67 08 54-42, E-mail sales@gunt.de, Web http://www.gunt.de
We reserve the right to modify our products without any notifications.

HL 962.30 *Tank System*

The illustration shows the complete layout of a pump system, comprising four HL 962 assembly stands, each with one pump (HL 962.01 - HL 962.04), the piping system HL 962.32 and the tank system HL 962.30.

*** Water supply for a complex piping and pump system**

*** Large high-level tank for normally primed pumps**

*** Low-level tank for self-priming pumps**

Technical Description

The HL 962 assembly stands are connected with piping elements from HL 962.32 to form a complex piping and pump system. The tank system HL 962.30 is required so that the system can operate as a closed process.

The tank system consists of a large high-level tank with a mounting frame, a low-level tank and connections with shut-off devices to the PVC piping system HL 962.32.

The high-level tank has a capacity of approximately 1,5m³ of water. A manometer close to the base of the tank measures the base pressure, thereby indicating the fill level. The high-level tank supplies the intake pipes of normally primed centrifugal pumps, and ensures an adequate inflow head. Its intake and delivery pipe distribution points are located at a height of about 2m.

The low-level tank is also supplied with water from the high-level tank. It is used for the self-priming side channel pump. A float valve ensures an adequate water level. All pumps transfer the water back to the high-level tank via the delivery line of the piping system.

All materials in the tank system are fully corrosion-proof, as they are all manufactured from plastic.

The assembly stand (HL 962), tank system (HL 962.30) and piping system (HL 962.32) are interconnected by way of flanges. It is possible to expand the system and connect more assembly stands.

HL 962.30 *Tank System*

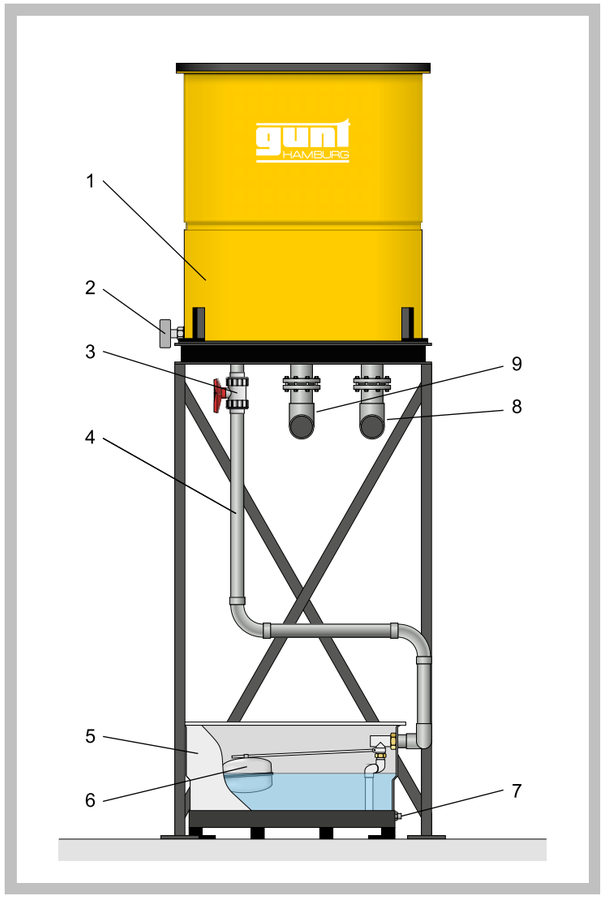

1 high-level tank, 2 manometer, 3 ball valve, 4 pipe to low-level tank, 5 low-level tank, 6 float valve, 7 connection to intake pipe for side channel pump, 8 delivery pipe distributor, 9 intake pipe distributor

Specification

[1] water supply for a complex piping and pump system
[2] high-level tank with cover and manometer on solid frame for supply to normally primed pumps
[3] low-level tank with cover and float valve to supply the self-priming side channel pump HL 962.03
[4] PVC piping to supply the low-level tank from the high-level tank
[5] connection between the HL 962.30, HL 962.32 and HL 962 elements via flanges
[6] high-level tank with frame

Technical Data

High-level tank with cover
- capacity: 1500L
- material: polyethylene
- distributor to pipes in base
- height of delivery side distributor: approx. 2m
- 1 manometer on supply tank: 0...1,6mWC

Low-level tank with cover
- capacity: 280L
- material: glass fibre-reinforced plastic

2 manometers to check the intake pressure of the side channel pump HL 962.03: -1...1,5bar

PVC pipes from HL 962.32
- intake pipe: DN80
- delivery pipe: DN80
- intake pipe to side channel pump: DN32

Dimensions and Weight

LxWxH: 1350x1350x3860mm
Weight: approx. 350kg

Scope of Delivery

1 mounting frame
1 high-level tank with cover
1 low-level tank with cover
1 PVC pipe to interconnect the two tanks
1 set of assembly drawings

Order Details

065.96230 HL 962.30 Tank System

G.U.N.T Gerätebau GmbH, Hanskampring 15-17, D-22885 Barsbüttel, Phone +49 (40) 67 08 54-0, Fax +49 (40) 67 08 54-42, E-mail sales@gunt.de, Web http://www.gunt.de
We reserve the right to modify our products without any notifications.

WL 315C Trainer for Various Heat Exchangers

*** Examination and comparison of various types of heat exchangers**

*** Various operating modes selectable**

*** GUNT software for data acquisition**

Technical Description

In heat exchangers, thermal energy is transferred from one mass flow to another. The two mass flows do not come into contact with each other in this process. To avoid losses, efficient heat transfer must be ensured. For this reason, different types of heat exchangers are used in practice, depending on the requirements.

The WL 315C trainer enables students to examine and compare five different types of heat exchangers. The heat is transferred in the heat exchangers according to the counterflow or parallel flow principle with different fluids.

The heat exchanger to be examined is selected at the switch cabinet. Valves are used to switch between parallel flow and counter flow. The flow rate in the hot water and/or cold water circuit is also adjusted via valves. The hot water flows through the heat exchanger and transfers part of its thermal energy to the cold water in this process.

The trainer is equipped with sensors for differential pressures and temperatures. The flow rate is measured with an electromagnetic flow meter. The measured values can be read on digital displays. At the same time, the measured values can also be transmitted directly to a PC via USB. The data acquisition software is included.

The hot or cold water is supplied from the laboratory or with the accessories WL 312.10 Hot Water Bench and WL 312.11 Cold Water Bench. An optionally available water/steam heat exchanger unit (WL 315.01) and the electrical steam generator (WL 315.02) extend the scope of experiments.

The well-structured instructional material sets out the fundamentals and provides a step-by-step guide through the experiments.

Learning Objectives / Experiments

- familiarisation with heat transfer processes
  * heat transfer
  * heat conduction
- measuring of relevant temperatures and flow rates
- determination of the overall heat transfer coefficient
- preparation of temperature curves for the various types of heat exchanger
  * parallel flow
  * counterflow
  * cross parallel flow
  * cross counter flow
- comparison of various types of heat exchanger
  * plate heat exchanger
  * tubular heat exchanger
  * shell and tube heat exchanger
  * finned cross-flow heat exchanger
  * jacketed vessel with stirrer

WL 315C Trainer for Various Heat Exchangers

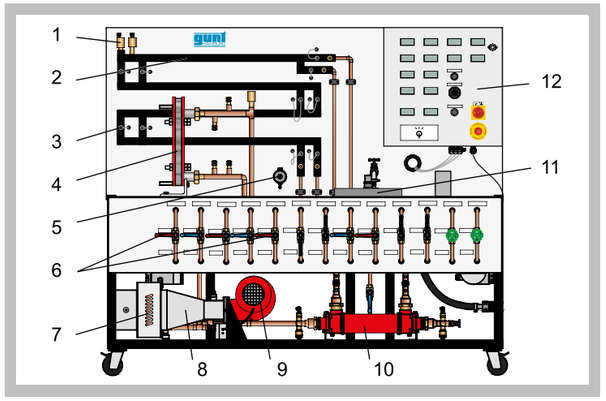

1 bleed valve, 2 tubular heat exchanger, 3 temperature sensor, 4 plate heat exchanger, 5 pressure sensor (water), 6 adjustment valves and fittings, 7 finned cross-flow heat exchanger, 8 inlet duct, 9 fan, 10 shell and tube heat exchanger, 11 jacketed vessel with stirrer, 12 switch cabinet

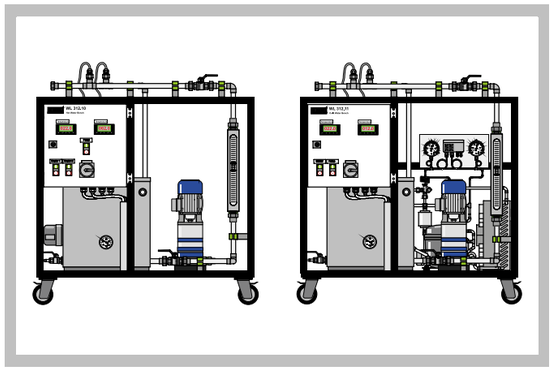

Supply of hot water (WL 312.10) and cold water (WL 312.11). This ensures that the WL 315C can be operated as an independent system with a closed water circuit.

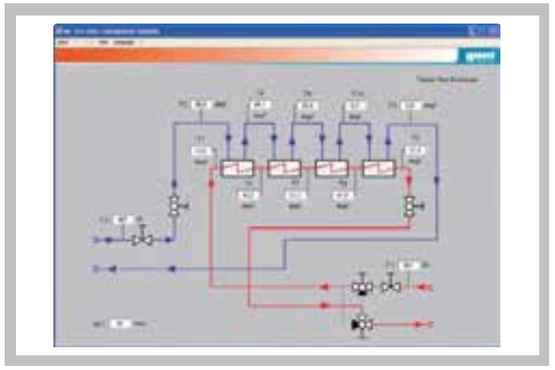

Software screenshot: process schematic of a tubular heat exchanger

Specification

[1] examination and comparison of various heat exchanger types
[2] five different types of heat exchangers included in the scope of delivery
[3] finned heat exchanger with fan
[4] operating mode (parallel flow or counter flow) selectable via valves
[5] flow rates adjustable via valves
[6] electromagnetic flow meter
[7] digital displays for temperature, pressure differences and flow rate
[8] hot and cold water benches (WL 312.10 and WL 312.11) available for independent operation
[9] water/steam heat exchanger unit (WL 315.01) and electrical steam generator (WL 315.02) available for further experiments
[10] GUNT software for data acquisition via USB under Windows Vista or Windows 7

Technical Data

Plate heat exchanger, 10 plates
- heat transfer surface area: approx. 0,26m²
- capacity: 15kW

Tubular heat exchanger
- heat transfer surface area: 0,1m²

Shell and tube heat exchanger
- capacity: 13kW

Finned cross-flow heat exchanger
- heat transfer surface area: approx. 2,8m²
- max. flow rate fan: 780m³/h
- max. pressure difference fan: 430Pa

Jacketed vessel with stirrer
- heat transfer surface area (vessel): 0,16m²
- heat transfer surface area (coil): 0,17m²

Measuring ranges
- differential pressure air: 0...10mbar
- differential pressure water: 0...1000mbar
- flow rate: 0...3m³/h
- temperature: 0...100°C

Dimensions and Weight

LxWxH: 2010x800x1760mm
Weight: approx. 300kg

Required for Operation

230V, 50/60Hz, 1 phase or 120V, 60Hz/CSA, 1 phase

Scope of Delivery

1 trainer
1 GUNT software CD + USB cable
1 set of instructional material

Order Details

060.315C0 WL 315C Trainer for Various Heat Exchangers

2E a division of G.U.N.T Gerätebau GmbH, P.O.Box 1125, D-22885 Barsbüttel, t +49 (40)67 08 54-0, f +49 (40)67 08 54-42, E-mail sales@gunt.de
We reserve the right to modify our products without any notifications. Visit our Websites: www.gunt.de | www.gunt2e.de

ET 860 Safety Devices on Steam Boilers

*** Complete steam boiler simulation with pressure and water level regulation**

*** Safety chain with commercially available components**

*** Transparent boiler, clear view of the water level**

*** GUNT software for data acquisition**

Technical Description

The pressure and temperature in a steam boiler are increased by constantly supplying energy so that the liquid medium (in most cases water) becomes gaseous. Steam boilers are monitored by safety devices which are electrically connected in series, the so-called "safety chain". If one of the monitoring or control devices trips, an alarm is triggered and the entire system or the affected system component is switched off.

The ET 860 trainer enables a steam boiler simulation to demonstrate the operating principle and response behaviour of a safety chain according to TRD 602. The trainer has a closed water circuit which consists of a supply tank, a pump and a transparent steam boiler model with burner. The boiler is equipped with industrial components which monitor and/or regulate the water level and the pressure. The components used have a high practical relevance. The safety chain for the burner is functional. Burner operation is simulated.

In addition to the safety devices, the system is equipped with 15 fault circuits. This enables the simulation of system component faults so that students can learn how to localise the faults.

Sensors measure the water level and the pressure. The measured values are transmitted directly to a PC via USB. The data acquisition software is included. The process schematic with the safety components, the pressure curves and a representation of the water level can be observed in the software.

The well-structured instructional material sets out the fundamentals and provides a step-by-step guide through the experiments.

Learning Objectives / Experiments

- model of an oil-fired steam boiler with operating and safety components
- characteristics of the monitoring elements
- fault circuits
  * burner with flame monitoring
  * pressure switch and limiter
  * feed water and level controller
  * high and low water limiter

ET 860 Safety Devices on Steam Boilers

1 water level monitoring, 2 burner, 3 steam boiler model, 4 supply tank, 5 switch cabinet, 6 switch box for fault circuit, 7 pressure measurement equipment

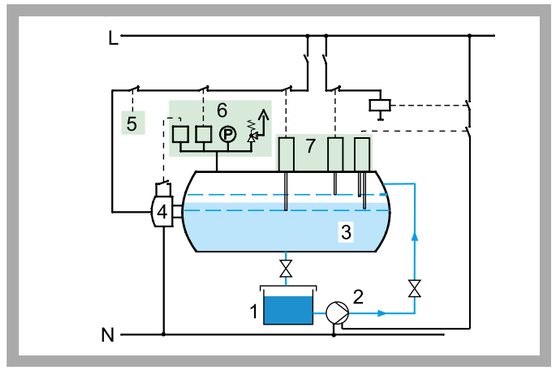

Safety chain of a steam boiler
1 supply tank, 2 feed water pump, 3 boiler, 4 burner, 5 time control, 6 pressure monitoring, 7 water level monitoring; green: safety chain according to TRD 602, blue: water

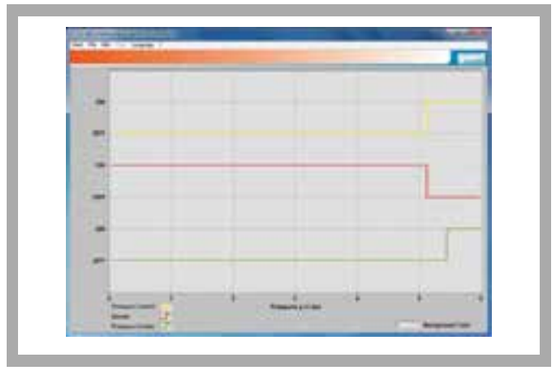

Software screenshot: behaviour of burner, pressure limiter and pressure controller if the pressure in the boiler rises

Specification

[1] steam boiler simulation
[2] control of water level and pressure of the boiler and fault circuit
[3] 15 faults that trigger the safety chain
[4] safety chain according to TRD 602 (german technical rules for steam boilers) containing: level switches, pressure switch and pressure controller
[5] transparent boiler to observe the water level
[6] steam pressure simulated using compressed air
[7] operation of burner simulated
[8] front panel with process schematic, indicator lamps and lab jacks
[9] GUNT software for data acquisition via USB under Windows Vista or Windows 7

Technical Data

Boiler capacity: 110L
Supply tank capacity: 150L
Pump
- power consumption: 40...70W
- max. flow rate: 66L/min
- max. head: 4m

Pressure switch: 0,5...6bar
Pressure limiter: 0,5...6bar
Safety valve: 6bar

Measuring ranges
- pressure: 0...6bar
- level: 0...100%

Dimensions and Weight

LxWxH: 1820x790x1800mm
Weight: approx. 220kg

Required for Operation

230V, 50/60Hz, 1 phase or 120V, 60Hz, 1 phase
Compressed air: 5bar

Scope of Delivery

1 trainer
1 GUNT software CD + USB cable
1 digital multimeter
1 set of laboratory cables
1 set of instructional material

Order Details

061.86000 ET 860 Safety Devices on Steam Boilers

G.U.N.T Gerätebau GmbH, Hanskampring 15-17, D-22885 Barsbüttel, Phone +49 (40) 67 08 54-0, Fax +49 (40) 67 08 54-42, E-mail sales@gunt.de, Web http://www.gunt.de
We reserve the right to modify our products without any notifications.

CONTROL ENGINEERING IN PRACTICE

Industrial production processes are becoming more and more complex and are mostly automated today. Using modern control engineering is essential in this context. Control engineering specifically monitors and influences individual processes. Process variables such as flow rate, pressure and temperature are continually measured and controlled for this purpose. The aim is to keep the value of a process variable as constant as possible. For example, a liquid or gaseous medium may need to have a specific temperature for a process.

The area in which a process variable is controlled is called a **controlled system** (e.g. tank). The controlled system contains a **sensor** which measures the current value of the process variable (**controlled variable**). The controlled variable is transmitted to a controller as a signal. The controller compares the controlled variable with the desired value (**reference variable**) and determines the deviation between both values. The controller then sends a corresponding signal to the **actuator**. This causes a change of the **output level** so that the process variable approaches the reference variable again. All components involved in a control process are functionally interconnected via the **control loop**.

Example
The basic principle of a control process is illustrated below on the example of a pH value control process. This process requires a specific pH value (reference variable) in the tank (controlled system) for the two reactants (A) to react and form the product (B).

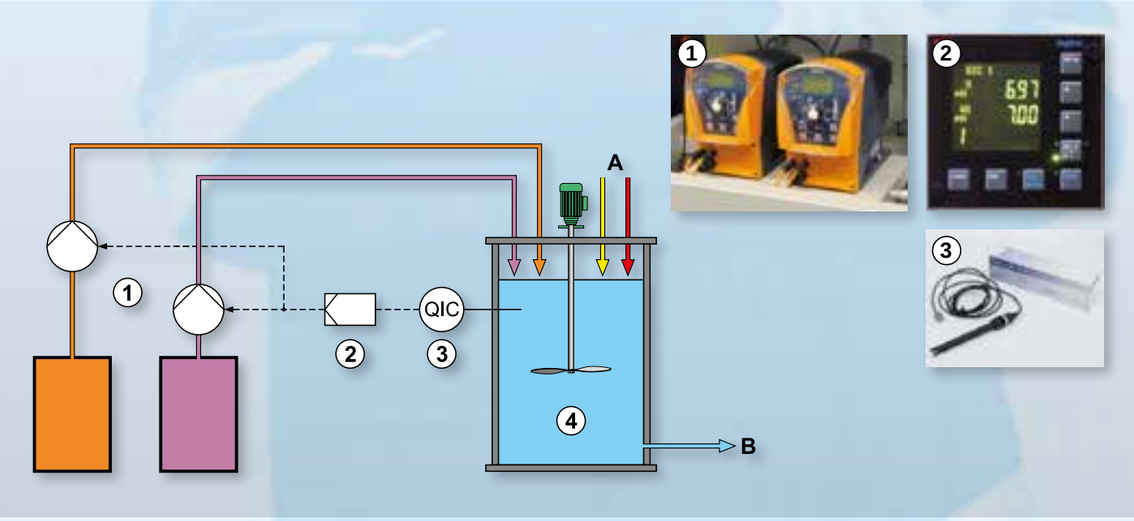

Example of a control loop: controlling the pH value in a tank
***1** actuators (metering pumps for acid and/or base), **2** controllers, **3** pH value sensor, **4** controlled system (tank)*
***A** reactants, **B** reaction product*

RT 310 *Calibration Station*

CALIBRATION
Required for a smooth control process

Every component of a control loop exhibits a complex behaviour. This behaviour significantly influences the quality of the control process. It is therefore necessary to calibrate the key components of a control loop. Our RT 310 trainer is ideally suited to explain all important aspects of a calibration to students.

CONTROLLING ONE VARIABLE
A perfect start

Systems in which only one variable is controlled are ideally suited to introduce students to the subject matter. This makes it easy even for beginners. For this purpose, we have developed a special device series. Nevertheless, we made sure to include real, industrial components to guarantee a high practical relevance.

Controlled variable	Device
level	RT 512
flow rate	RT 522
pressure	RT 532
temperature	RT 542
pH value	RT 552

RT 532 *Pressure Control Trainer*

RT 682 *Multivariable Control: Stirred Tank*

CONTROLLING MULTIPLE VARIABLES
Highly realistic

Normally, multiple variables need to be controlled at the same time in industrial production processes. Our devices therefore enable students to learn and understand the complex interrelations of a multivariable control process in a practical manner. Again, we of course only use real, industrial components to ensure a high practical relevance.

RT 310 WORKING WITH THE CALIBRATION STATION

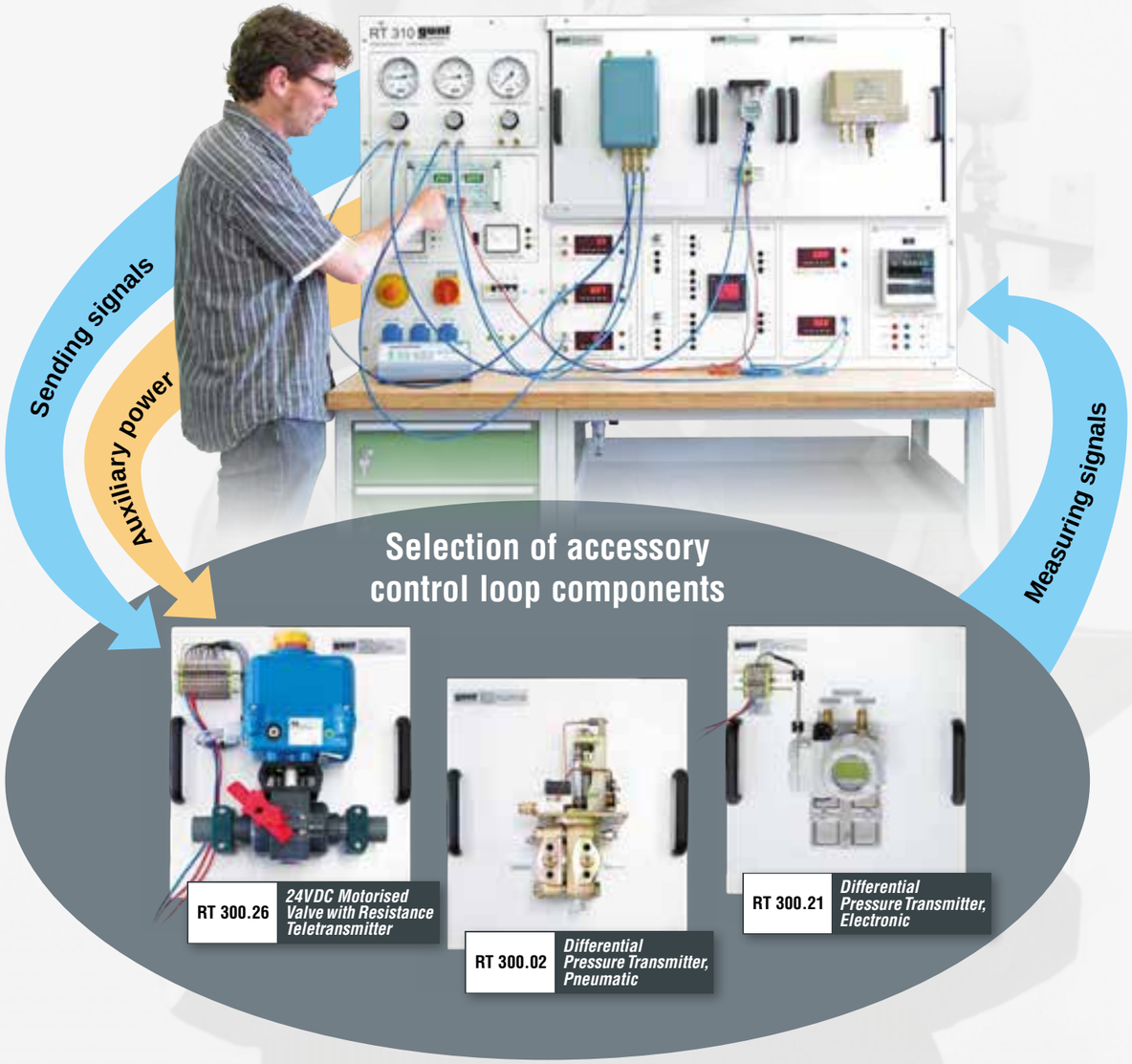

Calibration station and control loop components – a coordinated concept

The calibration station provides everything needed for investigating the transmission behaviour of control loop components. Electrical and pneumatic signals can be generated as inputs to the individual components. The calibration station is provided with extensive measuring equipment for the recording of the output signals from the control loop components. Many control loop components, such as transducers and actuators, require auxiliary power in order to operate. RT 310 supplies this auxiliary power in the form of pneumatic or electrical energy. A large selection of control loop components are available as accessories. They are specifically designed for use with the calibration station, and can be easily installed in the station's frame. The necessary cables and tubing are supplied.

SENDING SIGNALS AND SUPPLYING AUXILIARY POWER

Pressure	1x 0...2 bar
	2x 0...8 bar
Direct current	0...30V
	0...5A
Alternating voltage	24V
	230V
Resistance	0...100 Ohm
	0...500 Ohm
Controller outputs	0/4...20mA
	Relays

MEASURING SIGNALS

Pressure	0...0,6 bar
	0...2,5 bar
	0...8 bar
Direct current	0...20mA
Direct voltage	0...20V
3-channel line recorder	0/4...20mA
	0/2...10VDC
	0/0,2...1VDC
Controller inputs configurable for	Thermocouples
	Resistance thermometer
	Resistance teletransmitter
	Direct current
	Direct voltage

UNIVERSAL CALIBRATOR

The RT 310 package includes a separate universal calibrator. It offers the opportunity to test and calibrate control loop components in a practical way. For example, the device facilitates the simulation of output signals from thermocouples and the measurement of the resulting output signal from a connected transducer.

...A CONCRETE EXAMPLE

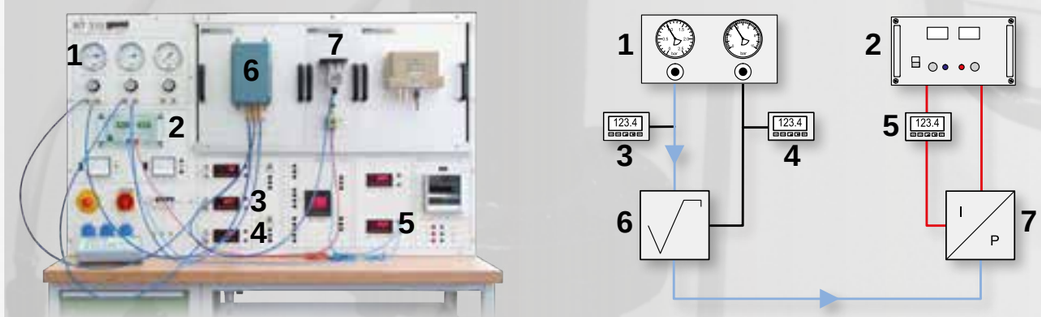

1 pressure regulator, 2 power supply unit, 3 pressure gauge (signal), 4 pressure gauge (auxiliary power), 5 ammeter, 6 square root extractor, pneumatic (RT 300.03), 7 pressure transmitter, electronic (RT 300.20)

RT 310 Calibration Station

* **Investigation of the transmission behaviour of actuators and transducers**
* **Calibration of control loop components using precision measuring technique**
* **Various control loop components available as accessories**

Technical Description

The calibration station is used in the investigation of the transmission behaviour of electrical and pneumatic control loop components. Electrical and pneumatic signals can be generated to effect actuation of the individual control loop components. A precision measuring technique facilitates the recording of the output signals from the control loop components. The supply of auxiliary power necessary for many control loop components is also provided.

Three pressure regulators with manometers are included to generate pneumatic signals. They can also be used to supply the components with auxiliary power. A power supply unit with adjustable voltage and current serves as the DC voltage source. Two switchable AC voltage sources supply auxiliary power. Two potentiometers can be used to simulate the behaviour of various devices such as resistance teletransmitters or motorized valves.

Three digital pressure gauges, a voltmeter, an ammeter and a 3-channel line recorder are provided for recording the output signals from the control loop components.

An industrial controller can be used to generate signals in the form of functions and to measure signals. It features three input channels and two output channels which are freely configurable. A separate high-grade universal calibrator further enhances the practical value of this unit. As an example, the calibrator facilitates the simulation of output signals from thermocouples and the measurement of the resulting output signal from a connected transducer.

Various control loop components such as transducers, control valves and controllers are available as accessories. They are inserted in the calibration station frame and connected by way of the supplied hoses and cables.

The well-structured instructional material sets out the fundamentals and provides a step-by-step guide through the experiments.

Learning Objectives / Experiments

Together with the accessory control loop components
- mode of operation of control loop components
  * transducers
  * actuators
  * controllers
- familiarisation with different signals
  * pneumatic
  * electrical
- correct connection of control loop components
- transmission behaviour of control loop components

RT 310 Calibration Station

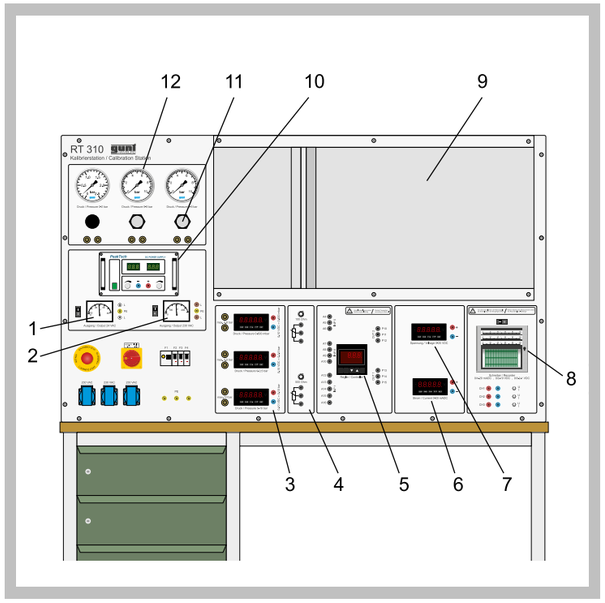

1 AC source 24V, 2 AC source 230V, 3 pressure gauge, 4 potentiometer, 5 controller, 6 ammeter, 7 voltmeter, 8 3-channel line recorder, 9 frame for control loop components, 10 power supply unit, 11 pressure regulator, 12 manometer

Universal calibrator

Specification

[1] investigation of transmission behaviour and calibration of electronic and pneumatic control loop components
[2] sending and measuring pneumatic and electrical signals
[3] 3 pressure regulators with manometers
[4] adjustable power supply unit as DC voltage source
[5] 2 switchable AC voltage sources with differing voltages
[6] 3 digital pressure gauges with differing measuring ranges
[7] 2 adjustable potentiometers
[8] freely configurable industrial controller
[9] digital voltmeter
[10] digital ammeter
[11] 3-channel line recorder with freely selectable measuring ranges
[12] separate high-grade universal calibrator for voltage, current, temperature and resistance

Technical Data

3 pressure regulators
- 1x 0...2bar
- 2x 0...8bar

Power supply unit
- voltage: 0...30VDC
- current: 0...5A

2 AC voltage sources
- 24VAC
- 230VAC

Pressure gauge measuring ranges
- 0...0,6bar
- 0...2,5bar
- 0...10bar

2 potentiometers
- 0...100Ohm
- 0...500Ohm

Voltmeter: 0...20VDC
Ammeter: 0...20mA

Dimensions and Weight

LxWxH: 1520x750x1800mm
Weight: approx. 220kg

Required for Operation

230V, 50/60Hz, 1 phase
Compressed air connection: 6...8bar

Scope of Delivery

1 calibration station
1 universal calibrator
1 set of cables
1 set of compressed air hoses
1 set of instructional material

Order Details

080.31000 RT 310 Calibration Station

G.U.N.T Gerätebau GmbH, Hanskampring 15-17, D-22885 Barsbüttel, Phone +49 (40) 67 08 54-0, Fax +49 (40) 67 08 54-42, E-mail sales@gunt.de, Web http://www.gunt.de
We reserve the right to modify our products without any notifications.

RT 310 *Calibration Station*

Available accessories:

TRANSDUCERS:

Product no.	Order details
080.30001	RT 300.01 Pressure Transmitter, Pneumatic
080.30002	RT 300.02 Differential Pressure Transmitter, Pneumatic
080.30003	RT 300.03 Square Root Extractor, Pneumatic
080.30006	RT 300.06 Current-to-Pressure Converter
080.30020	RT 300.20 Pressure Transmitter, Electronic
080.30021	RT 300.21 Differential Pressure Transmitter, Electronic
080.30027	RT 300.27 Transmitter for Pt100, Electronic
080.30028	RT 300.28 Transmitter for Thermocouple Type K
080.30029	RT 300.29 Transmitter for Thermocouple Type J

CONTROL VALVES:

Product no.	Order details
080.30014	RT 300.14 Pneumatic Control Valve with Pneumatic Positioner
080.30025	RT 300.25 Pneumatic Control Valve with Electro-Pneumatic Positioner
080.30026	RT 300.26 24VDC Motorised Valve with Resistance Teletransmitter

CONTROLLERS:

Product no.	Order details
080.30009	RT 300.09 Pneumatic PID-Controller

G.U.N.T Gerätebau GmbH, Hanskampring 15-17, D-22885 Barsbüttel, Phone +49 (40) 67 08 54-0, Fax +49 (40) 67 08 54-42, E-mail sales@gunt.de, Web http://www.gunt.de
We reserve the right to modify our products without any notifications.

Catalogue 5c
The complete process control engineering programme

FROM THE BASIC FUNDAMENTALS...

...TO THE INDIVIDUAL COMPONENTS...

... AND THE COMPLETE PROCESS CONTROL SYSTEM.

RT 512 – RT 552 CONTROL ENGINEERING TRAINERS WITH PROCESS CONTROL SYSTEM

RT 512 *Level Control Trainer*

RT 522 *Flow Control Trainer*

RT 532 *Pressure Control Trainer*

Didactic goals and exercises

Comprehensive programme of experiments with each trainer:

- introduction to the fundamentals of control engineering based on experimentation
- familiarisation with real industrial components such as controllers, chart recorders, actuators and sensors
- demonstration of a wide variety of types of control systems (e.g. temperature, pressure)
- familiarisation with different controlled system characteristics
- investigation of disturbance and control response
- controller optimisation
- parameterisation of the local industrial controller
  – manually
  – automatically
  – via process control software
- downstream processing of process variables with external recording devices: chart recorder, oscilloscope
- familiarisation with and use of a process control software (with accessory RT 650.50)

RT 542 *Temperature Control Trainer*

RT 552 *pH-Value Control Trainer*

The trainers in this equipment series provide a comprehensive and practical introduction to the fundamentals of control engineering. The trainers are fully practice-based in design: only controls and process components currently deployed in industrial applications are used.

Each trainer in itself represents a complete course in the fundamentals of control engineering. The special feature of these units is that two or more trainers can be interconnected via a Profibus interface to a state-of-the-art process control software to form a networked complete system.

The trainers are suitable for two learning situations: demonstration by the tutor or independent laboratory experimentation by the students.

The well-structured instructional material sets out the fundamentals and provides a step-by-step guide through the experiments.

Process Control Software

State-of-the-art LabVIEW-based process control software for Windows, featuring extensive monitoring and visualisation functionality:

- for stand-alone trainers or networking of multiple trainers
- network capability
- process schematics with online display of all process variables
- parameterisation of the individual controllers
- control station function for multiple training rig configurations
- chart recorder function with storage of measured data
- alarm function with logging
- 4 pre-selectable languages and 1 user-defined language possible

Communication between PC and local controllers and networking of the individual trainers via field bus system (Profibus DP):

- Profibus interface card for PC with driver software (RT 650.12)
- Profibus interface for controllers provided as standard

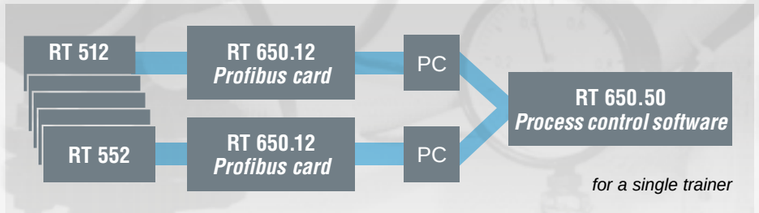

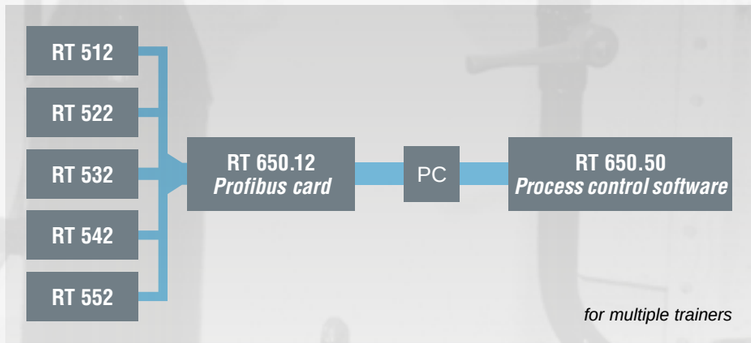

RT 512 Level Control Trainer

*** Experimental introduction to control engineering using an example of level control**

*** Construction of the system with components commonly used in industry**

*** Digital controller with freely selectable parameters: P, I, D and all combinations**

*** Integrated 2-channel line recorder**

*** Optional process control software RT 650.50 available**

*** Construction of a complete networked system via Profibus interface possible**

Technical Description

This trainer provides a comprehensive experimental introduction to the fundamentals of control engineering using an example of level control.

A pump delivers water from a storage tank to the transparent level-controlled tank. The liquid level is measured by a pressure transducer installed at the base of the level-controlled tank. The controller used is a state-of-the-art digital industrial controller. The actuator in the control loop is a pneumatically operated control valve with an electro-pneumatic positioner. A ball valve in the outlet line enables defined disturbance variables to be generated. The controlled variable X and the manipulating variable Y are plotted directly on an integrated 2-channel line recorder. Alternatively, the variables can be tapped as analogue signals at lab jacks on the switch cabinet. This enables external recording equipment, such as an oscilloscope or a flatbed plotter, to be connected.

A process control software (RT 650.50) is optionally available. The software permits the construction of a complete networked system comprising multiple trainers from the RT 512 - RT 552 series. The key process variables can also be represented, and control functions executed.

The well-structured instructional material sets out the fundamentals and provides a step-by-step guide through the experiments.

Learning Objectives / Experiments

- fundamentals of control engineering
- real industrial control engineering components: controllers, transducers, actuators
- operation and parameterisation of the local industrial controller
  * manually (by keyboard)
  * using the RT 650.50 process control software
- investigation of disturbance and control response
- controller optimisation
- investigation of the properties of the open and closed control loops
- processing of process variables using external equipment, e.g. oscilloscope or plotter
- together with accessory RT 650.50 and other trainers (RT 522 - RT 552): familiarisation with and use of process control software (SCADA)

RT 512 Level Control Trainer

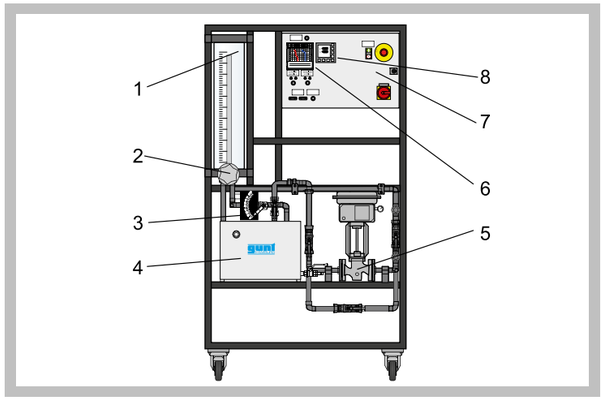

1 transparent level-controlled tank, 2 pressure sensor, 3 ball valve with scale, 4 storage tank with pump, 5 pneumatic control valve, 6 line recorder, 7 switch cabinet, 8 controller

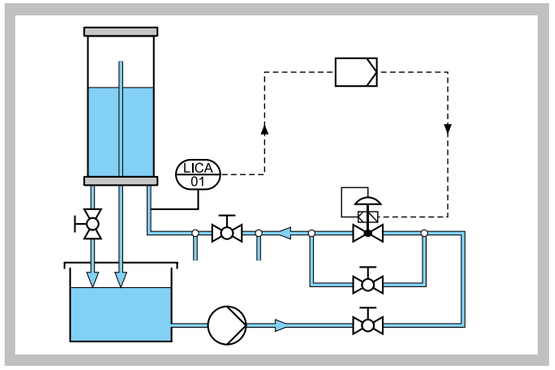

Process schematic

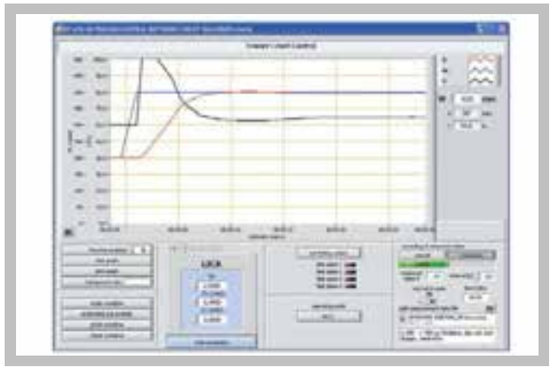

Screenshot of optional process control software RT 650.50: step response to change in reference variable, PI controller

Specification

[1] trainer for control engineering experiments
[2] level control process, equipped with standard industrial components
[3] level measurement by pressure sensor
[4] generation of disturbance variables by ball valve with scale in outlet
[5] transparent level-controlled tank with overflow and graduated scale
[6] pneumatically operated control valve with electro-pneumatic positioner
[7] digital controller, parameterisable as a P, PI or PID controller
[8] 2-channel line recorder
[9] process variables X and Y accessible as analogue signals via lab jacks

Technical Data

Storage tank: 30L
Centrifugal pump
- power consumption: 250W
- max. flow rate: 150L/min
- max. head: 7m
- speed: 2800min^{-1}

Level-controlled tank
- max. 7L
- level: 0...0,6m

Pressure sensor: 0...100mbar
Pneumatically operated control valve DN 20
- Kvs: 4,0m³/h
- reference variable: 4...20mA
- nominal stroke: 15mm
- characteristic curve equal-percentage

Line recorder
- 2x 4...20mA
- feed rate 0...7200mm/h, stepped

Controller
- process variables X, Y as analogue signals: 4...20mA

Dimensions and Weight

LxWxH: 1000x700x1750mm
Weight: approx. 124kg

Required for Operation

230V, 50/60Hz, 1 phase or 120V, 60Hz/CSA, 1 phase
Compressed air: 3...8bar

Scope of Delivery

1 trainer
1 set of cables
1 set of hoses
1 set of instructional material

Order Details

080.51200 RT 512 Level Control Trainer

G.U.N.T Gerätebau GmbH, Hanskampring 15-17, D-22885 Barsbüttel, Phone +49 (40) 67 08 54-0, Fax +49 (40) 67 08 54-42, E-mail sales@gunt.de, Web http://www.gunt.de
We reserve the right to modify our products without any notifications.

RT 522 Flow Control Trainer

*** Experimental introduction to control engineering using an example of flow control**

*** Construction of the system with components commonly used in industry**

*** Digital controller with freely selectable parameters: P, I, D and all combinations**

*** Integrated 2-channel line recorder**

*** Optional process control software RT 650.50 available**

*** Construction of a complete networked system via Profibus interface possible**

Technical Description

This trainer provides a comprehensive experimental introduction to the fundamentals of control engineering using an example of flow control.

A pump delivers water from a storage tank through a piping system. The flow rate is measured by an electromagnetic sensor, which permits further processing of the measured value by outputting a standardised current signal. A rotameter indicates the flow. The controller used is a state-of-the-art digital industrial controller. The actuator in the control loop is a control valve with electric motor operation. A ball valve in the outlet line enables defined disturbance variables to be generated. The controlled variable X and the manipulating variable Y are plotted directly on an integrated 2-channel line recorder. Alternatively, the variables can be tapped as analogue signals at lab jacks on the switch cabinet. This enables external recording equipment, such as an oscilloscope or a flatbed plotter, to be connected.

A process control software (RT 650.50) is optionally available. The software permits the construction of a complete networked system comprising multiple trainers from the RT 512 - RT 552 series. The key process variables can also be represented, and control functions executed.

The well-structured instructional material sets out the fundamentals and provides a step-by-step guide through the experiments.

Learning Objectives / Experiments

- fundamentals of control engineering
- real industrial control engineering components: controllers, transducers, actuators
- operation and parameterisation of the local industrial controller
  * manually (by keyboard)
  * using the RT 650.50 process control software
- investigation of disturbance and control response
- controller optimisation
- investigation of the properties of the open and closed control loops
- processing of process variables using external equipment, e.g. oscilloscope or plotter
- together with accessory RT 650.50 and other trainers (RT 512, RT 532 - RT 552): familiarisation with and use of process control software (SCADA)

RT 522 Flow Control Trainer

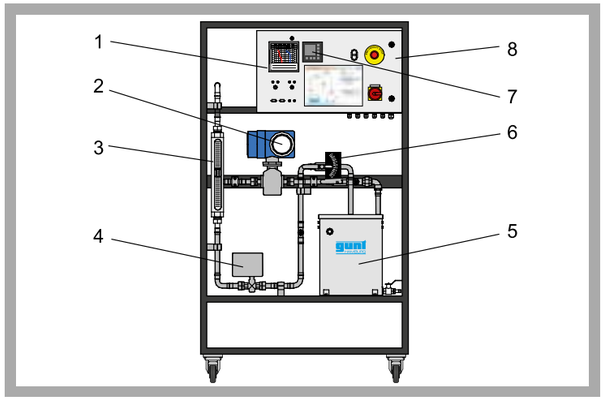

1 line recorder, 2 electromagnetic flow rate sensor, 3 rotameter, 4 control valve, 5 storage tank with pump, 6 ball valve with scale, 7 controller, 8 switch cabinet

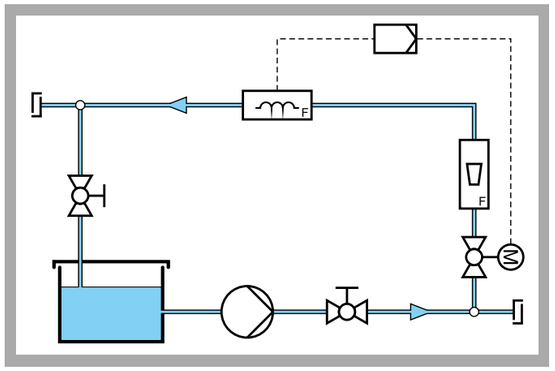

Process schematic

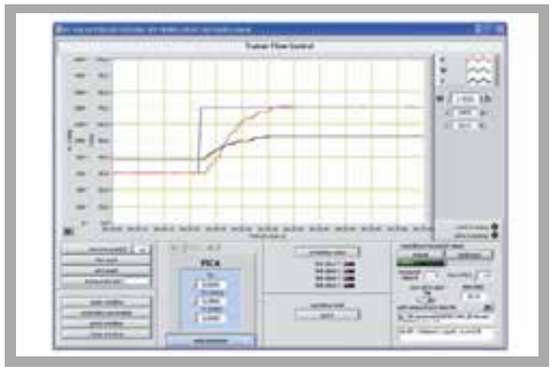

Screenshot of optional process control software RT 650.50: step response to change in reference variable, PI controller

Specification

[1] trainer for control engineering experiments
[2] flow control process, equipped with standard industrial components
[3] flow rate measurement by electromagnetic sensor
[4] rotameter for direct observation of the flow
[5] generation of disturbance variables by ball valve with scale in outlet line
[6] control valve with electric motor
[7] digital controller, parameterisable as a P, PI or PID controller
[8] 2-channel line recorder
[9] process variables X and Y accessible as analogue signals via lab jacks

Technical Data

Storage tank: 30L
Centrifugal pump
- power consumption: 250W
- max. flow rate: 150L/min
- max. head: 7m
- speed: 2800min^{-1}

Rotameter: 0...1960L/h
Electromagnetic flow rate sensor: 0...6000L/h
Control valve with electric motor
- Kvs: 5,7m³/h
- stroke: 5mm
- characteristic curve equal-percentage
- valve-opening position sensor: 0...1000 Ohm

Line recorder
- 2x 4...20mA
- feed rate 0...7200mm/h, stepped

Controller
- process variables X, Y as analogue signals: 4...20mA

Dimensions and Weight

LxWxH: 1000x700x1750mm
Weight: approx. 110kg

Required for Operation

230V, 50/60Hz, 1 phase or 120V, 60Hz/CSA, 1 phase

Scope of Delivery

1 trainer
1 set of cables
1 hose
1 set of instructional material

Order Details

080.52200 RT 522 Flow Control Trainer

G.U.N.T Gerätebau GmbH, Hanskampring 15-17, D-22885 Barsbüttel, Phone +49 (40) 67 08 54-0, Fax +49 (40) 67 08 54-42, E-mail sales@gunt.de, Web http://www.gunt.de
We reserve the right to modify our products without any notifications.

RT 532 Pressure Control Trainer

*** Experimental introduction to control engineering using an example of pressure control**

*** Construction of the system with components commonly used in industry**

*** Digital controller with freely selectable parameters: P, I, D and all combinations**

*** Integrated 2-channel line recorder**

*** Optional process control software RT 650.50 available**

*** Construction of a complete networked system via Profibus interface possible**

Technical Description

This trainer provides a comprehensive experimental introduction to the fundamentals of control engineering using an example of pressure control.

The air pressure control system is a 2nd order system. It comprises two in-line pressure tanks interconnected by a flow control valve. An additional valve on the second tank makes air tapping possible and so can be used to simulate a disturbance variable. A pressure sensor measures the pressure in the second vessel. The controller used is a state-of-the-art digital industrial controller. The actuator in the loop is a pneumatically operated control valve with a standardised current signal input. The controlled variable X and the manipulating variable Y are plotted directly on an integrated 2-channel line recorder. Alternatively, the variables can be tapped as analogue signals at lab jacks on the switch cabinet. This enables external recording equipment, such as an oscilloscope or a flatbed plotter, to be connected.

A process control software (RT 650.50) is optionally available. The software permits the construction of a complete networked system comprising multiple trainers from the RT 512 - RT 552 series. The key process variables can also be represented, and control functions executed.

The well-structured instructional material sets out the fundamentals and provides a step-by-step guide through the experiments.

Learning Objectives / Experiments

- fundamentals of control engineering
- real industrial control engineering components: controllers, transducers, actuators
- operation and parameterisation of the local industrial controller
  * manually (by keyboard)
  * using the RT 650.50 process control software
- control response to
  * 1st order controlled system
  * 2nd order controlled system
- investigation of disturbance and control response
- controller optimisation
- investigation of the properties of the open and closed control loops
- processing of process variables using external equipment, e.g. oscilloscope or plotter
- together with accessory RT 650.50 and other trainers (RT 512, RT 522, RT 542, RT 552): familiarisation with and use of process control software (SCADA)

RT 532 Pressure Control Trainer

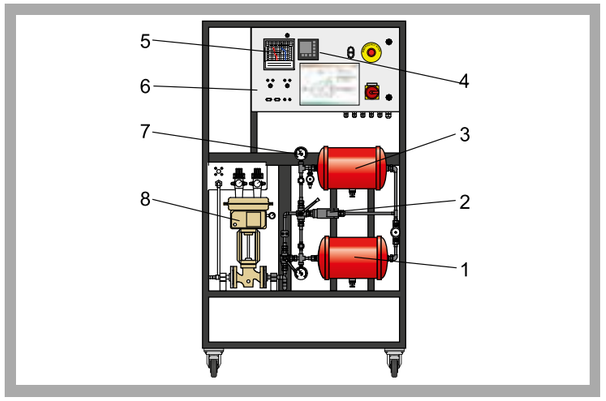

1 pressure tank, 2 pressure sensor, 3 pressure tank, 4 digital controller, 5 line recorder, 6 switch cabinet, 7 manometer, 8 pneumatically operated control valve

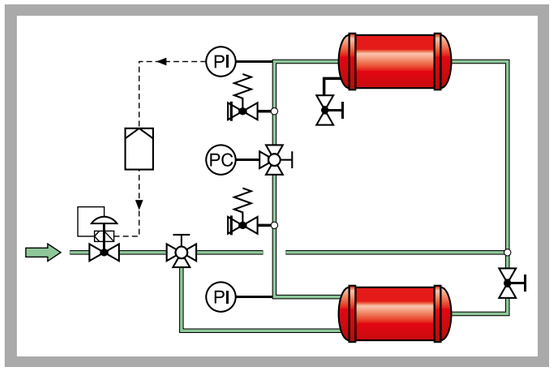

Process schematic

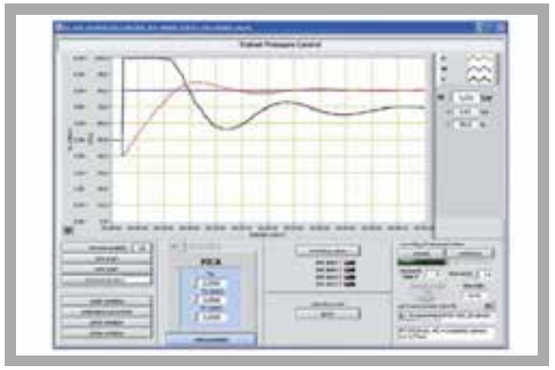

Screenshot of optional process control software RT 650.50: step response to change in reference variable, PI controller

Specification

[1] trainer for control engineering experiments
[2] pressure control process, equipped with standard industrial components
[3] pressure measurement by pressure sensor
[4] generation of disturbance variables by drain valve
[5] 2 pressure tanks with pressure relief valve and manometer for direct observation of the tank pressure
[6] valves permit investigation of a 1st order controlled system (1 tank) or 2nd order controlled system (2 in-line tanks)
[7] pneumatically operated control valve with electro-pneumatic positioner
[8] digital controller, parameterisable as a P, PI or PID controller
[9] 2-channel line recorder
[10] process variables X and Y accessible as analogue signals via lab jacks

Technical Data

2 pressure tanks
- capacity: each 10L
- max. pressure: 10bar
- operating pressure: 6bar

Pressure sensor: 0...6bar
Pneumatically operated control valve
- connecting flanges: DN15
- Kvs: 0,1m³/h
- reference variable: 4...20mA
- stroke: 15mm
- characteristic curve equal-percentage

Line recorder
- 2x 4...20mA
- feed rate 0...7200mm/h, stepped

Controller
- process variables X, Y as analogue signals: 4...20mA

Dimensions and Weight

LxWxH: 1000x700x1750mm
Weight: approx. 110kg

Required for Operation

230V, 50/60Hz, 1 phase or 120V, 60Hz/CSA, 1 phase
Compressed air: 3...8bar

Scope of Delivery

1 trainer
1 set of cables
1 hose
1 set of instructional material

Order Details

080.53200 RT 532 Pressure Control Trainer

G.U.N.T Gerätebau GmbH, Hanskampring 15-17, D-22885 Barsbüttel, Phone +49 (40) 67 08 54-0, Fax +49 (40) 67 08 54-42, E-mail sales@gunt.de, Web http://www.gunt.de
We reserve the right to modify our products without any notifications.

RT 542 Temperature Control Trainer

*** Experimental introduction to control engineering using an example of temperature control**

*** Construction of the system with components commonly used in industry**

*** Digital controller with freely selectable parameters: P, I, D and all combinations**

*** Controllers configurable: Continuous controller, 2-point or 3-point controller**

*** Integrated 2-channel line recorder**

*** Optional process control software RT 650.50 available**

*** A complete networked system can be constructed with Profibus interface**

Technical Description

This trainer provides a comprehensive experimental introduction to the fundamentals of control engineering using an example of temperature control.

A circulating pump delivers water within a closed circuit. The flow rate of water can be adjusted by a hand-operated valve. The loop also contains a screw-in heater, a heat exchanger with fan, and three integrated thermocouples for temperature measurement. Dead times can be represented by the use of different lengths of process delay. A thyristor power controller is used as the actuator. The controller used is a state-of-the-art digital industrial controller. It can be configured as a continuous or a switching device, and can activate the heater via the actuator and / or the fan. The controlled variable X and the manipulating variable Y are plotted directly on an integrated 2-channel line recorder. Alternatively, the variables can be tapped as analogue signals at lab jacks on the switch cabinet. This enables external recording equipment, such as an oscilloscope or a flatbed plotter, to be connected.

A process control software (RT 650.50) is optionally available. The software permits the construction of a complete networked system comprising multiple trainers from the RT 512 - RT 552 series. The key process variables can also be represented, and control functions executed.

The well-structured instructional material sets out the fundamentals and provides a step-by-step guide through the experiments.

Learning Objectives / Experiments

- fundamentals of control engineering
- real industrial control engineering components: controllers, transducers, actuators
- operation, configuration and parameterisation of the local industrial controller
  * manually (by keyboard / controller software RT 450.14)
  * using the RT 650.50 process control software
- control response to
  * switching control (2-point / 3-point controller)
  * continuous control
  * dead times
- investigation of disturbance and control response
- controller optimisation
- investigation of the properties of the open and closed control loops
- processing of process variables using external equipment, e.g. oscilloscope or plotter
- together with accessory RT 650.50 and other trainers (RT 512 - RT 532, RT 552): familiarisation with and use of process control software (SCADA)

RT 542 Temperature Control Trainer

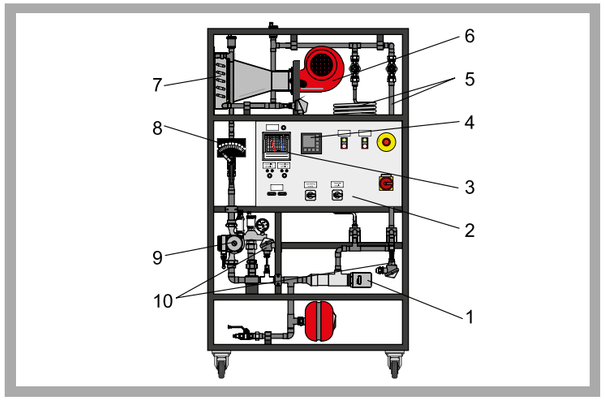

1 screw-in heater, 2 switch cabinet, 3 line recorder, 4 controller, 5 process delays, 6 fan, 7 heat exchanger, 8 ball valve with scale, 9 pump, 10 thermocouples

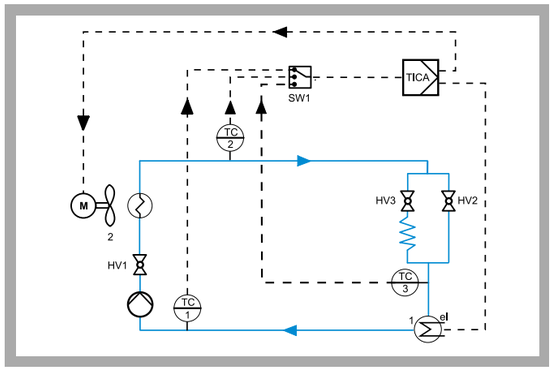

Process schematic: controller can activate heater power controller (continuous or switching) and/or fan (switching) according to mode

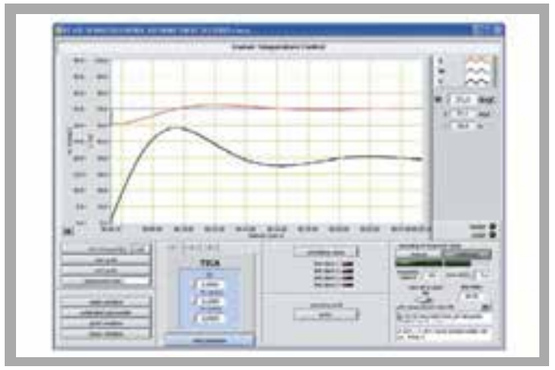

Screenshot of optional process control software RT 650.50: step response to change in reference variable, PI controller

Specification

[1] trainer for control engineering experiments
[2] temperature control process, equipped with standard industrial components
[3] water circuit with pump, heater and 2 different lengths of process delay
[4] screw-in heater with dry-running protection and temperature limiter
[5] air/water heat exchanger with fan
[6] temperature measurement with thermocouples at multiple points
[7] generation of disturbance variables by ball valve with scale in water circuit
[8] thyristor power controller as actuator
[9] digital controller, configurable as switching or continuous controller
[10] 2-channel line recorder
[11] process variables X and Y accessible as analogue signals via lab jacks

Technical Data

Pump, 3-stage
- max. power consumption: 70W
- max. flow rate: 3,6m³/h
- max. head: 4m

Screw-in heater: 2kW
Heat exchanger: approx. surface area 2,8m²
Fan
- power output: 250W
- max. flow rate: 780m³/h
- max. differential pressure: 430Pa
- speed: 2880min^{-1}

Thermocouple: type J: 0...200°C
Thyristor power controller max. load current: 25A
Line recorder
- 1x 4...20mA, 1x 0...20mA
- feed rate 0...7200mm/h, stepped

Controller
- process variables X, Y as analogue signals: 4...20mA

Dimensions and Weight

LxWxH: 1000x700x1750mm
Weight: approx. 120kg

Required for Operation

230V, 50/60Hz, 1 phase or 230V, 60Hz/CSA, 3 phases

Scope of Delivery

1 trainer
1 set of cables
1 hose
1 set of instructional material

Order Details

080.54200 RT 542 Temperature Control Trainer

G.U.N.T Gerätebau GmbH, Hanskampring 15-17, D-22885 Barsbüttel, Phone +49 (40) 67 08 54-0, Fax +49 (40) 67 08 54-42, E-mail sales@gunt.de, Web http://www.gunt.de
We reserve the right to modify our products without any notifications.

RT 552 pH Value Control Trainer

The illustration shows a similar unit.

*** Experimental introduction to control engineering using an example of continuous pH value control**

*** Construction of the system with components commonly used in industry**

*** Digital controller with freely selectable parameters: P, I, D and all combinations**

*** Integrated 2-channel line recorder**

*** Optional process control software RT 650.50 available**

*** Construction of a complete networked system via Profibus interface possible**

Technical Description

This trainer provides a comprehensive experimental introduction to the fundamentals of control engineering using an example of continuous pH control.

A caustic solution is added to fresh water by way of a metering pump. The pH value of this solution is measured. The acid is then added to the solution as a neutralising reagent by way of a second metering pump. The chemical reaction occurs in a pipeline system. The pH value is then remeasured. A state-of-the-art digital industrial controller controls the second metering pump with reference to this pH value. The neutralised solution flows into the product tank. A third manual measurement of the pH value in the product tank permits disposal of solution with a neutral pH value. The pH value of the input solution can be varied by manually adjusting the metering pump or by varying the quantity of fresh water. This enables disturbances to be simulated. The controlled variable X and the manipulating variable Y are plotted directly on an integrated 2-channel line recorder. Alternatively, the variables can be tapped as analogue signals at lab jacks on the switch cabinet. This enables external recording equipment, such as an oscilloscope or a flatbed plotter, to be connected.

A process control software (RT 650.50) is optionally available. The software permits the construction of a complete networked system comprising multiple trainers from the RT 512 - RT 552 series. The key process variables can also be represented, and control functions executed.

The well-structured instructional material sets out the fundamentals and provides a step-by-step guide through the experiments.

Learning Objectives / Experiments

- fundamentals of control engineering
- real industrial control engineering components
- operation and parameterisation of the local controller
  * manually
  * using the RT 650.50 process control software
- pH value control
  * influence of dead time
- ratio control
- investigation of disturbance and control response
- controller optimisation
- properties of the open and closed control loops
- processing of process variables using external equipment, e.g. oscilloscope or plotter
- together with accessory RT 650.50 and other trainers (RT 512 - RT 542): familiarisation with and use of process control software (SCADA)

RT 552 pH Value Control Trainer

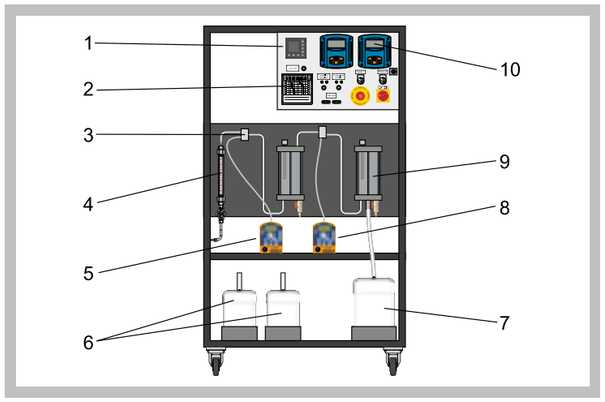

1 controller, 2 line recorder, 3 mixing nozzle, 4 rotameter (fresh water), 5 manually adjustable caustic metering pump, 6 chemicals tank, 7 product tank, 8 controller-adjusted acid metering pump, 9 product tank, 10 pH value display

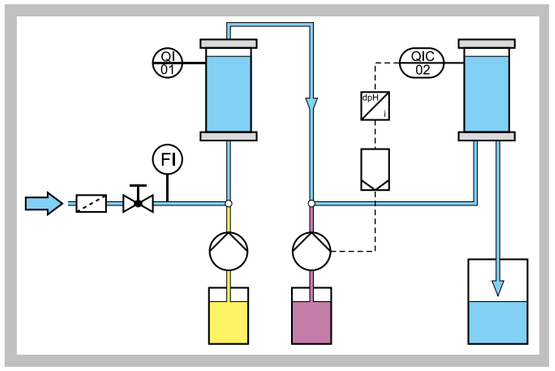

Process schematic

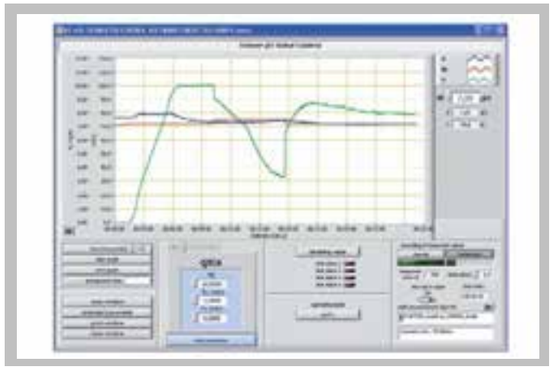

Screenshot of optional process control software RT 650.50: step response to change in reference variable, PI controller

Specification

[1] trainer for control engineering experiments
[2] pH value control process, equipped with standard industrial components
[3] neutralisation of a caustic solution with an acid
[4] 2 pH value sensors in transparent measuring tanks with overflow
[5] digital controller, parameterisable as a P, PI or PID controller
[6] product tank and 2 chemicals tanks
[7] 2 metering pumps: adjustable manually or via controller
[8] water connection with control valve and rotameter
[9] corrosion-resistant piping system
[10] hand-held pH-meter for product control
[11] 2-channel line recorder
[12] process variables X and Y accessible as analogue signals via lab jacks

Technical Data

Product tank: 20L
Chemicals tank: 2x 5L
Metering pumps
- max. flow rate: each 2,1L/h
- max. head: each 160m

pH value sensor
- filled with solid electrolyte
- with glass shaft and PTFE diaphragm

Line recorder
- 2x 4...20mA
- feed rate 0...7200mm/h, stepped

Controller
- process variables X, Y as analogue signals: 4...20mA

Measuring ranges
- pH value: 1...12
- temperature: 0...80°C

Dimensions and Weight

LxWxH: 1000x700x1750mm
Weight: approx. 105kg

Required for Operation

230V, 50/60Hz, 1 phase or 120V, 60Hz/CSA, 1 phase
Water connection
Caustic soda NaOH 45%; hydrochloric acid HCl 30%, technically pure; buffer solution pH 4,0 (red), buffer solution pH 7,0 (green), buffer solution pH 10,0 (blue)

Scope of Delivery

1 trainer
1 hand-held pH-meter
3 measuring cups
1 set of cables
1 hose
1 set of instructional material

Order Details

080.55200 RT 552 pH Value Control Trainer

G.U.N.T Gerätebau GmbH, Hanskampring 15-17, D-22885 Barsbüttel, Phone +49 (40) 67 08 54-0, Fax +49 (40) 67 08 54-42, E-mail sales@gunt.de, Web http://www.gunt.de
We reserve the right to modify our products without any notifications.

RT 650.50 Process Control Software for RT 512 - RT 552 Series

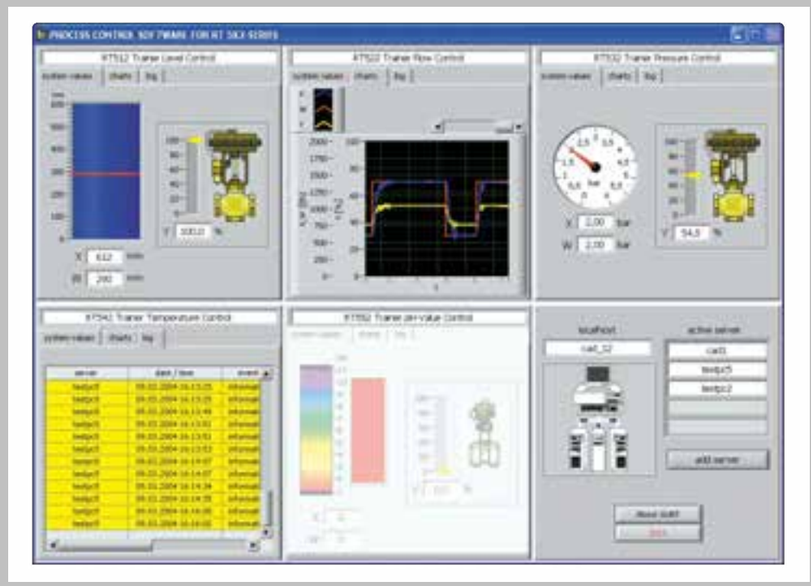

*** Control station for up to 5 trainers working simultaneously**

*** Autonomous detection of connected units**

*** Programmer**

*** Alarm function with four limit values for triggering an alarm or message**

Technical Description

The RT 650.50 process control software (SCADA) was developed specially for the RT 512 - RT 552 series of trainers. It can automatically detect which units are connected for operation. Up to five units can be connected simultaneously. The program and the trainers communicate via Profibus DP modules. Changes to the software are transmitted to the controller of the relevant trainer.

Alongside the process schematic, controller configuration and recorder functions, the software also provides programmer, messaging and control station functions. The process schematics display the process variables and the reference, controlled and manipulating variables in real time. They also allow the reference variable, the controller parameters and controller mode to be changed. There are also status displays for the alarms.

The "Charts" menu item offers features including controller parameter setting and mode selection, setting of the reference variable and limit values for the alarm function, as well as display of the controlled and manipulating variables. The characteristic of the reference variable over time (e.g. step input, ramp etc.) is specified in the programmer. A total of three programs are available, each with 15 software modules, and each including their own custom controller parameters. The messages are divided into alarms (status indicators, over/under limit) and information (status monitoring, approaching the limit). The message status is colour-coded. The control room function permits simultaneous monitoring and, where appropriate, accessing of all connected trainers.

Learning Objectives / Experiments

- familiarisation with and use of a process control system

Stand-alone operation with a single trainer
- process schematics with online display of all process variables
- alarm function with logging
- parameterisation for the individual controllers
- manual or automatic controller mode
- controller configuration for temperature control (continuous / 2-point / 3-point controller)
- software system allows multiple trainers to be controlled/monitored from one PC
- mode of operation of a programmer

additionally in combinations of multiple trainers on one PC
- control station function
- autonomous detection of the connected units

RT 650.50 Process Control Software for RT 512 - RT 552 Series

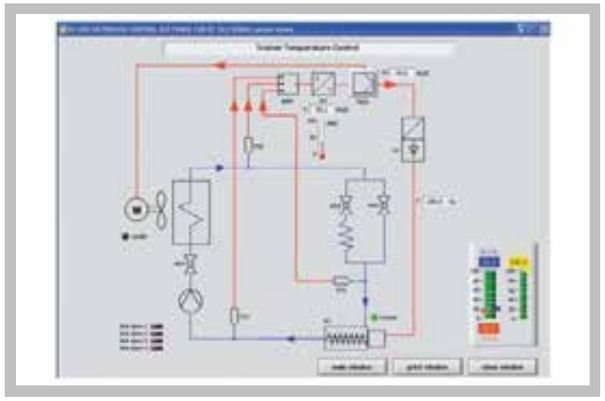

Process schematic for temperature control: reference variable W (setpoint) is settable directly; manipulating variable Y and controlled variable X (actual value) are displayed directly; controller can be accessed to change the parameters

Controller operation via process schematic: reference variable, controller parameters and controller mode (manual or automatic) selectable

Programming the notifications and alarms for temperature control

Specification

[1] interactive, menu-driven process control software (SCADA) for operation and monitoring of control processes
[2] control station function for simultaneous operation of multiple trainers
[3] alarm function
[4] programmer
[5] display of relevant data on PC
[6] data communication via Profibus DP
[7] use together with Profibus card RT 650.12; one Profibus card RT 650.12 per PC workstation required

Technical Data

Operation and parameterisation of hardware controllers
Recorder function with data saving
- recording and saving of time functions
- evaluation of step responses with automatically generated inflectional tangent

Language selection
- 4 pre-selectable languages
- 1 user-defined language possible

Programmer
- up to 3 programs with 15 values in each
- custom controller parameters for each program
- looping possible

Alarm function with 4 programmable values
- upper and lower alarm limit
- upper and lower message limit
- comments about alarms/messages can be entered

Software basis: LabVIEW
System requirements: Windows Vista or Windows 7

Scope of Delivery

1 CD with LabVIEW process control software
1 manual with description of software functions and instructions for use with control engineering trainers RT 512 - RT 552

Order Details

080.65050 RT 650.50 Process Control Software for RT 512 - RT 552 Series

G.U.N.T Gerätebau GmbH, Hanskampring 15-17, D-22885 Barsbüttel, Phone +49 (40) 67 08 54-0, Fax +49 (40) 67 08 54-42, E-mail sales@gunt.de, Web http://www.gunt.de
We reserve the right to modify our products without any notifications.

RT 586 Control of Water Quality

*** Control of pH value, redox potential, oxygen concentration and electrical conductivity**

*** 4 control loops with industrial controllers**

Technical Description

Adequate water quality is essential to many production processes. With RT 586 key water parameters can be monitored and controlled.

Water flows into a transparent tank which contains a stirrer. A sensor allows for measurement of the conductivity of the water. It is displayed on a meter and transmitted as an electrical signal to a controller. The desired conductivity is preset as the reference variable on the controller. The controller influences the conductivity of the water by adding diluted caustic soda with a metering pump.

The addition of caustic soda causes the pH value of the water to rise. It flows into a second transparent tank. A sensor provides for the measurement of the pH value. The desired pH value is preset as the reference variable on the controller. The water is neutralized by adding diluted sulphuric acid with a metering pump. Another sensor in this tank is used to measure the oxygen concentration of the water. It is displayed on a meter and transmitted as an electrical signal to the controller. The controller influences the injection of compressed air, and thus the oxygen concentration of the water, by way of a control valve. The water flows into a collecting tank.

The redox potential is controlled in a separate section of the collecting tank. In this section the redox potential is measured using a sensor. The controller influences the redox potential of the water by the addition of iodine solution with a metering pump.

As a further check of performance, a sensor is employed to measure the pH value of the water in the collecting tank. It is displayed digitally on the switch cabinet. A six-channel line recorder is provided to record the control processes.

The well-structured instructional material sets out the fundamentals and provides a step-by-step guide through the experiments.

Learning Objectives / Experiments

- comparison of various controller types
  - * P, PD, PI and PID controllers
  - * two-point controller
- influence of caustic soda on electrical conductivity and pH value
- influence of sulphuric acid on pH value
- influence of air injection on oxygen concentration
- influence of iodine on redox potential

RT 586 Control of Water Quality

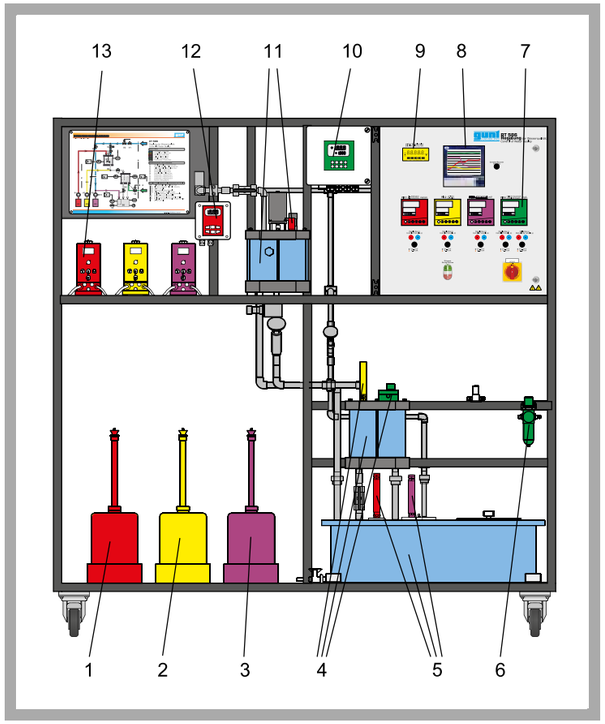

1 caustic soda, 2 sulphuric acid, 3 iodine solution, 4 tank with sensors for pH value and oxygen concentration, 5 collecting tank with sensors for redox potential and pH value, 6 compressed air maintenance unit, 7 controller, 8 line recorder, 9 collecting tank pH value display, 10 oxygen meter, 11 tank with stirrer and conductivity sensor, 12 conductivity meter, 13 metering pump

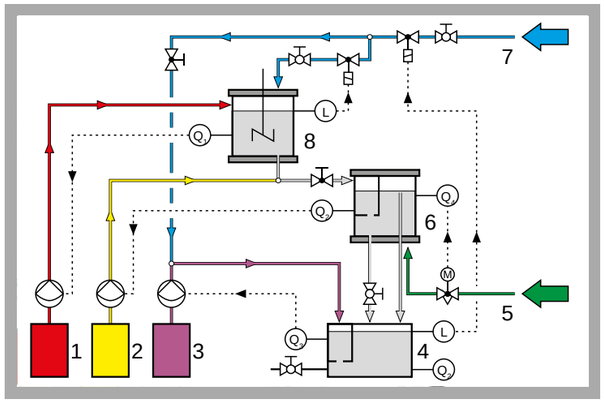

1 caustic soda, 2 sulphuric acid, 3 iodine solution, 4 collecting tank for control of redox potential, 5 compressed air, 6 tank for control of pH value and oxygen concentration, 7 water inlet, 8 tank for control of conductivity;
Q_1 conductivity, Q_2 pH value, Q_3 redox potential, Q_4 oxygen concentration

Specification

[1] control of water parameters; pH value, redox potential, oxygen concentration and electrical conductivity
[2] control of conductivity in transparent tank with stirrer
[3] control of pH value and oxygen concentration in transparent tank
[4] control of redox potential in collecting tank
[5] change in conductivity, pH value and redox potential by addition of caustic soda, sulphuric acid and iodine solution
[6] 3 industrial metering pumps
[7] change in oxygen concentration by injection of compressed air
[8] 4 parameterisable industrial controllers
[9] 6-channel line recorder
[10] 3 plastic tanks for caustic soda, sulphuric acid and iodine solution
[11] recording of pH value in collecting tank

Technical Data

Tanks
- transparent tanks: 2x 5L
- collecting tank: 80L
- plastic tanks: 3x each

Metering pumps
- max. flow rate: each 2,1L/h
- max. head: each 160m

4 controllers parameterisable as
- P, PI or PID controller
- 2-point controller

Measuring ranges
- conductivity: 0...100mS/cm
- pH value: 1...12
- oxygen concentration: 0...60mg/L
- redox potential: 0...1000mV

Dimensions and Weight

LxWxH: 1800x700x1830mm
Weight: approx. 182kg

Required for Operation

230V, 50Hz, 1 phase
Compressed air: 3...8bar, water connection, drainage, iodine solution, caustic soda, sulphuric acid

Scope of Delivery

1 trainer
1 hose
1 set of instructional material

Order Details

080.58600 RT 586 Control of Water Quality

G.U.N.T Gerätebau GmbH, Hanskampring 15-17, D-22885 Barsbüttel, Phone +49 (40) 67 08 54-0, Fax +49 (40) 67 08 54-42, E-mail sales@gunt.de, Web http://www.gunt.de
We reserve the right to modify our products without any notifications.

RT 580 Fault Finding in Control Systems

*** Practical control of level, flow rate and temperature**
*** Simulation of typical faults**
*** PLC to monitor safety devices**
*** Refrigeration system for independent cold supply**

Technical Description

The RT 580 facilitates practical learning in the control of three controlled variables which are commonplace in process engineering.

A circuit with a collecting tank, pump and graduated tank is provided for control of level and flow rate. A pneumatic control valve is used as the actuator. There is a valve in the tank outlet to generate a disturbance variable in level control. Cascade control is possible whereby the level in the tank is controlled by way of the flow rate.

Two circuits are used in the control of the temperature. A refrigeration system cools the water in the collecting tank. A pump circulates the water via a heat exchanger (cooling circuit). A heater heats the water in the graduated tank. Another pump also circulates the warm water via the heat exchanger. In the heat exchanger the water in the cooling circuit is heated. The controlled variable is the temperature of the water in the cooling circuit after heating in the heat exchanger. The actuator is the pneumatic control valve which adjusts the flow rate of the warm water. Cascade control is also possible to control the temperature.

Two industrial controllers are supplied which can be employed as the master and slave in the implementation of cascade control. They have a Profibus DP interface. This enables the trainer to be controlled by way of a software. The software also permits recording of the process variables and parameterisation of the controllers on the PC.

The trainer is equipped with a PLC for monitoring of safety devices, such as a low water cut-off which protects the heater. On the switch cabinet there are also pushbuttons for the simulation of typical faults such as failure of sensors or cable breaks.

The well-structured instructional material sets out the fundamentals and provides a step-by-step guide through the experiments.

Learning Objectives / Experiments

- familiarisation with industrial control loop components
- set-up, parameterisation and configuration on the controller
- optimisation of controller settings
- level control
- flow rate control
- temperature control
- cascade control, level - flow rate
- cascade control, temperature - flow rate
- plotting step responses
- fault finding

RT 580 Fault Finding in Control Systems

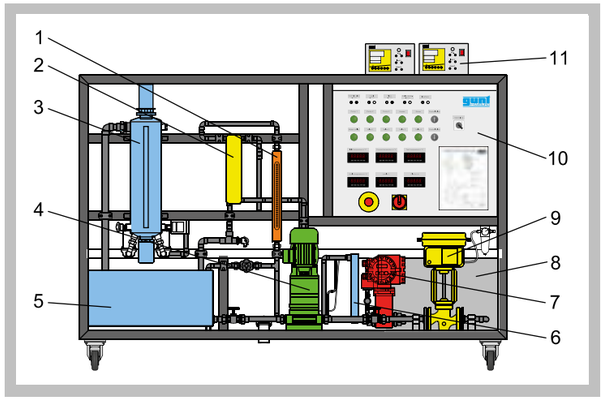

1 flow meter, 2 heat exchanger, 3 stirred tank with heater, 4 main circuit pump, 5 collecting tank, 6 refrigeration system evaporator, 7 flow rate sensor, 8 refrigeration system, 9 control valve, 10 switch cabinet, 11 controller

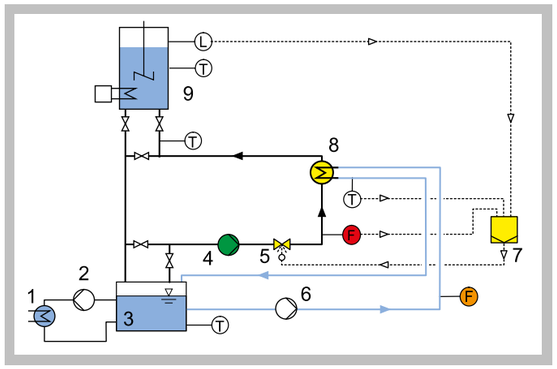

1 refrigeration system evaporator, 2 refrigeration system pump, 3 collecting tank, 4 main circuit pump, 5 control valve, 6 cooling circuit pump, 7 controller, 8 heat exchanger, 9 stirred tank with heater;
F flow rate, L level, T temperature

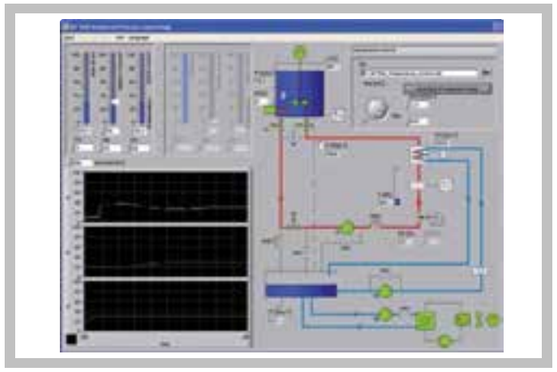

Process control software screenshot

Specification

[1] control of level, flow rate, temperature and cascade control
[2] main circuit with collecting tank, graduated stirred tank with heater, pneumatic control valve and centrifugal pump
[3] cooling circuit with pump, heat exchanger and rotameter
[4] refrigeration system and pump to cool the water in the collecting tank
[5] pneumatic control valve in main circuit as actuator for all controls
[6] sensors for the measurement of the controlled variables; level, flow rate and temperature
[7] 2 parameterisable industrial controllers
[8] 6 pushbuttons for fault simulation
[9] PLC to monitor safety devices
[10] GUNT process control software via Profibus DP interface under Windows Vista or Windows 7

Technical Data

Tanks
- stirred tank with scale: approx. 7L
- collecting tank: approx. 90L

Main circuit centrifugal pump
- max. flow rate: approx. 75L/min
- max. head: approx. 20m

2 pumps, cooling circuit and refrigeration system
- max. flow rate: approx. 60L/min
- max. head: approx. 4m

Heater power output: approx. 2kW
Controller parameterisable as
- P, PI or PID controller

Measuring ranges
- level: 0...350mm
- flow rate: 0...1999L/h
- temperature: 0...100°C

Dimensions and Weight

LxWxH: 1920x800x1530mm
Weight: approx. 245kg

Required for Operation

230V, 50/60Hz, 1 phase or 230V, 60Hz, 3 phases
compressed air: 3...8bar; 25...50L/min

Scope of Delivery

1 trainer
2 controllers
1 set of cables
1 Profibus card
1 CD with PLC programming software
1 GUNT software CD
1 set of instructional material

Order Details

080.58000 RT 580 Fault Finding in Control Systems

G.U.N.T Gerätebau GmbH, Hanskampring 15-17, D-22885 Barsbüttel, Phone +49 (40) 67 08 54-0, Fax +49 (40) 67 08 54-42, E-mail sales@gunt.de, Web http://www.gunt.de
We reserve the right to modify our products without any notifications.

RT 681 Multivariable Control: Vacuum Degassing

*** Practical multivariable control of level and pressure in a vacuum tank**

*** Model of "degassing of fluids" application from process engineering**

*** 2 configurable industrial controllers**

*** Optional process control software RT 650.60 available**

Technical Description

With RT 681 the complexities of a multivariable control system can be learned in a practical manner. The model for the controlled process is a typical application from process engineering: separation of gas dissolved in liquid. The pressure falls below the vapour pressure of the dissolved gas in a vacuum tank, so that it passes into the gas phase and can be removed (desorption).

The liquid used in RT 681 is water, and the gas is ambient air. A water jet pump generates the negative pressure in the vacuum tank. The negative pressure firstly draws water from a collecting tank into the vacuum tank. Secondly, ambient air is drawn in and mixed with the water before entering the vacuum tank. The water/air mixing ratio can be adjusted by way of rotameters and valves. The negative pressure in the vacuum tank degasses the water again. A pump transports the water out of the vacuum tank back into the collecting tank. A control valve is used to influence the flow rate and thus the level in the vacuum tank. Another pump circulates water from the collecting tank to operate the water jet pump. A control valve adjusts the flow rate in this circuit. In this way the negative pressure in the vacuum tank is adjusted. The negative pressure and level are mutually dependent variables. It is this dependence that makes this multivariable control system so complex.

Two industrial controllers are provided as level and pressure controllers. They can be configured and parameterised using a supplied software. The controllers have a Profibus DP interface. The interface permits monitoring of the trainer via an optionally available software RT 650.60. The RT 650.60 software also permits recording of the process variables and parameterisation of the controllers using the PC. It is also possible to interconnect multiple trainers from this series through the Profibus DP interface.

The well-structured instructional material sets out the fundamentals and provides a step-by-step guide through the experiments.

Learning Objectives / Experiments

- coupled level and pressure control
- level control with various controller types
- pressure control with various controller types
- plotting step responses

RT 681 Multivariable Control: Vacuum Degassing

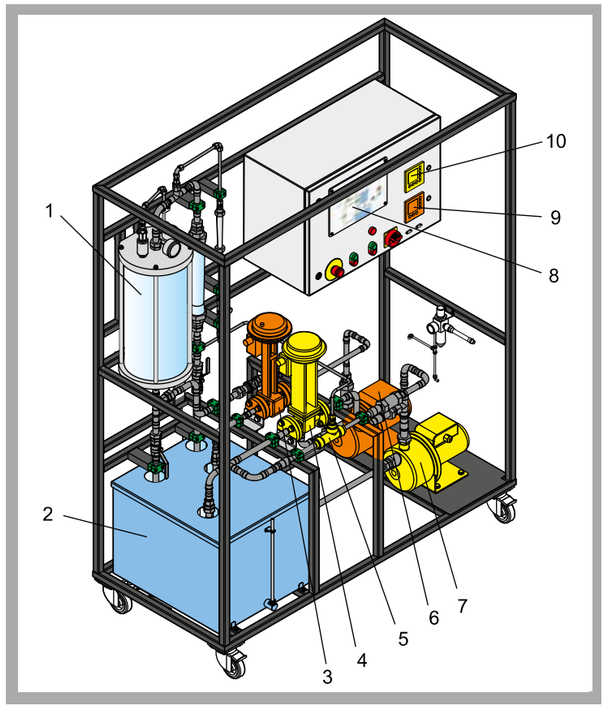

1 vacuum tank, 2 collecting tank, 3 level control valve, 4 pressure control valve, 5 water jet pump, 6 pump (vacuum tank), 7 pump for operation of water jet pump, 8 process schematic, 9 level controller, 10 pressure controller

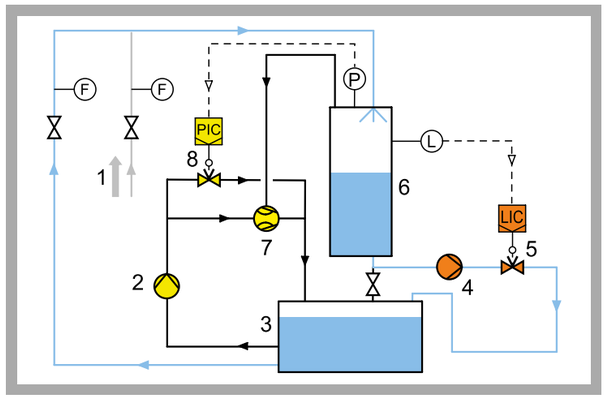

1 ambient air, 2 pump for operation of water jet pump, 3 collecting tank, 4 pump (vacuum tank), 5 level control valve, 6 vacuum tank, 7 water jet pump, 8 pressure control valve;
F flow rate, P pressure, L level, PIC controller (pressure), LIC controller (level)

Specification

[1] coupled level and pressure control in one vacuum tank
[2] water circuit with vacuum tank, collecting tank, pump and ambient air input device
[3] water jet pump to generate a negative pressure in the vacuum tank
[4] circuit with pump for operation of the water jet pump
[5] level control with pneumatic control valve as actuator
[6] pressure control with pneumatic control valve in the circuit for operation of the water jet pump
[7] level controller and pressure controller configurable and parameterisable with software
[8] optional process control software RT 650.60 via Profibus DP interface

Technical Data

Tanks
- vacuum tank: 19L
- collecting tank: 100L

2 centrifugal pumps
- max. flow rate: approx. 50L/min
- max. head: approx. 30m

Water jet pump: final vacuum: approx. 0,3bar
Pressure and level controller parameterisable as
- P, PI or PID controller
- switching controller

Measuring ranges
- pressure: -1...0,6bar
- level: 30...480mm
- flow rate: 1x 200...2500L/h, 1x 0...360L/h

Dimensions and Weight

LxWxH: 1150x700x1970mm
Weight: approx. 115kg

Required for Operation

230V, 50/60Hz, 1 phase or 120V, 60Hz, 1 phase
Compressed air connection for control valve: 2...10bar

Scope of Delivery

1 trainer
1 cable
1 hose
1 CD with software for parameterisation and configuration of the controllers
1 set of instructional material

Order Details

080.68100 RT 681 Multivariable Control: Vacuum Degassing

G.U.N.T Gerätebau GmbH, Hanskampring 15-17, D-22885 Barsbüttel, Phone +49 (40) 67 08 54-0, Fax +49 (40) 67 08 54-42, E-mail sales@gunt.de, Web http://www.gunt.de
We reserve the right to modify our products without any notifications.

RT 682 Multivariable Control: Stirred Tank

* **Practical multivariable control of temperature and level in a stirred tank**
* **Typical application from process engineering with heat recovery**
* **2 configurable industrial controllers**
* **Optional process control software RT 650.60 available**

Technical Description

With RT 682 the complexities of a multivariable control system can be learned in a practical manner. The model for the controlled process is a typical application from process engineering: A chemical reaction taking place in a heated stirred tank. The reactants entering the stirred tank are pre-heated by the outflowing products in order to enhance energy efficiency.

Water is used as the product and reactant for RT 682. A pump transports the reactant out of a collecting tank via a heat exchanger into the stirred tank. The reactant is pre-heated by the heat exchanger. A heater in the double jacket permits control of the temperature in the stirred tank. Another pump transports the heated product out of the stirred tank via the heat exchanger back into the collecting tank. A bypass in the inlet routes the flow past the heat exchanger. A three-way motorised valve adjusts the ratio between the flow heated in the heat exchanger and the flow in the bypass. This is a further method of controlling the temperature in the stirred tank. A control valve changes the flow rate in the outlet and thus the level in the stirred tank. The temperature and level are mutually dependent variables. It is this dependence that makes this multivariable control system so complex.

Two industrial controllers are provided as temperature and level controllers. They can be configured and parameterised using a supplied software. The controllers have a Profibus DP interface. The interface permits monitoring of the trainer via an optionally available software RT 650.60. The RT 650.60 software also permits recording of the process variables and parameterisation of the controllers using the PC. It is also possible to interconnect multiple trainers from this series through the Profibus DP interface.

The well-structured instructional material sets out the fundamentals and provides a step-by-step guide through the experiments.

Learning Objectives / Experiments

- coupled level and temperature control
- level control with
  * PI controller
  * disturbance feedforward control
- temperature control
  * with two-point controller
  * with three-point controller (split range)
  * with override control
  * via motorised valve with position feedback
- plotting step responses

RT 682 Multivariable Control: Stirred Tank

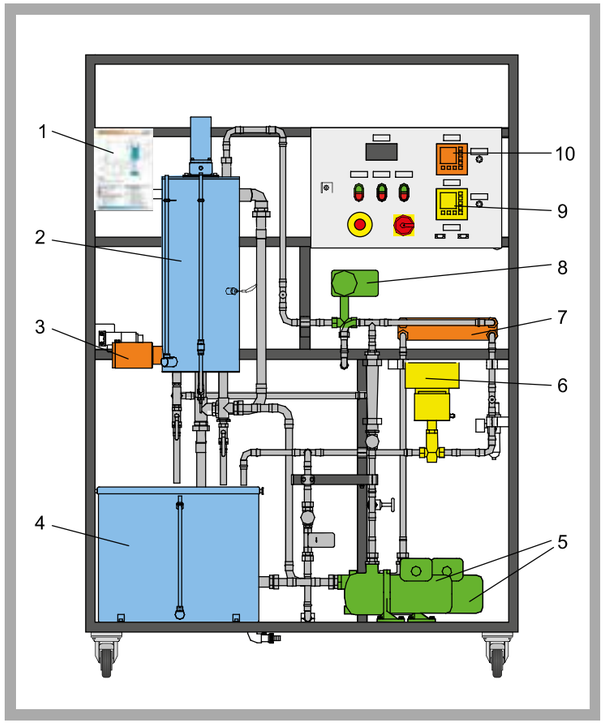

1 process schematic, 2 stirred tank, 3 heater, 4 collecting tank, 5 pumps, 6 level control valve, 7 heat exchanger, 8 3-way motorised valve, 9 level controller, 10 temperature controller

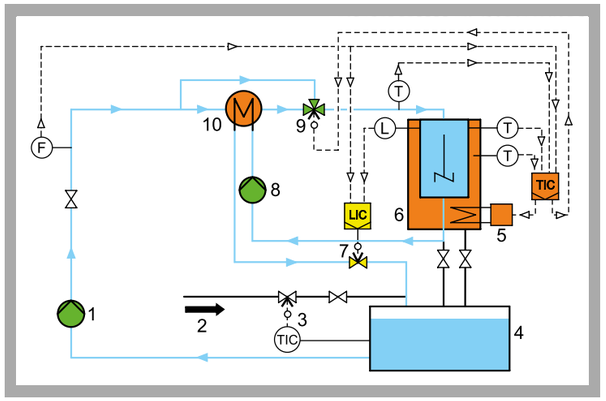

1 main circuit pump, 2 external cooling water, 3 collecting tank temperature control, 4 collecting tank, 5 heater, 6 stirred tank, 7 level control valve, 8 pre-heating pump, 9 3-way motorised valve, 10 heat exchanger; F flow rate, T temperature, L level, LIC controller (level), TIC controller (temperature)

Specification

[1] coupled level and temperature control in one stirred tank
[2] circuit with stirred tank, collecting tank and pump
[3] heat recovery with heat exchanger
[4] stirred tank with double jacket and heater; level display for tank and jacket
[5] temperature control with heater and 3-way motorised valve as actuators
[6] level control with pneumatic control valve as actuator
[7] temperature controller and level controller configurable and parameterisable with software
[8] 2-point controller for constant temperature in collecting tank via external cooling water
[9] optional process control software RT 650.60 via Profibus DP interface

Technical Data

Tanks
- stirred tank: 15L
- collecting tank: 70L

2 pumps
- max. flow rate: approx. 60L/min
- max. head: approx. 20m

Heat exchanger transfer surface: approx. 0,8m²
Heater power output: approx. 2kW
Temperature and level controller parameterisable as
- P, PI or PID controller
- switching controller

Measuring ranges
- flow rate: 60...640L/h
- temperature: 0...100°C
- level: 0...1000mm
- 3-way motorised valve opening: 0...100%

Dimensions and Weight

LxWxH: 1360x610x1940mm
Weight: approx. 162kg

Required for Operation

230V, 50Hz, 1 phase
Water connection: min. 60L/h
Compressed air connection for control valve: 2...10bar

Scope of Delivery

1 trainer
1 set of cables
1 set of hoses
1 CD with software for parameterisation and configuration of the controllers
1 set of instructional material

Order Details

080.68200 RT 682 Multivariable Control: Stirred Tank

2E a division of G.U.N.T Gerätebau GmbH, P.O.Box 1125, D-22885 Barsbüttel, t +49 (40)67 08 54-0, f +49 (40)67 08 54-42, E-mail sales@gunt.de
We reserve the right to modify our products without any notifications. **Visit our Websites: www.gunt.de | www.gunt2e.de**

RT 650.60 Process Control Software for RT 681 and RT 682

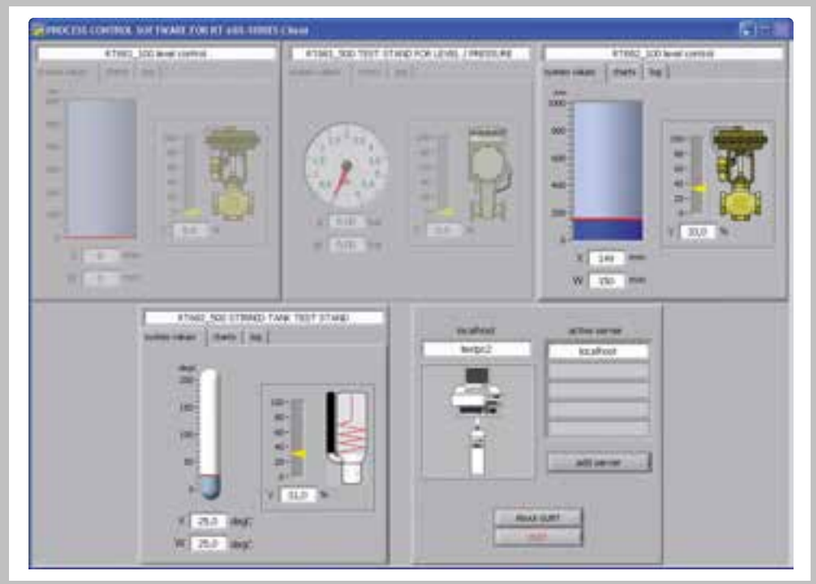

*** Process control software for Profibus DP connection**

*** Control station function provides for simultaneous operation of both trainers**

*** Automatic operation with programmer possible**

*** Alarm function with four limit values for triggering an alarm or message**

Technical Description

The RT 650.60 process control software (SCADA) was developed specifically for the RT 681 and the RT 682. It is possible to connect both trainers simultaneously. The software and the trainers communicate via Profibus DP modules. Changes to the software are transmitted to the controller of the relevant trainer.

The process is represented in the "Process schematic" window. The reference variable, controlled variable and manipulating variable are displayed in real time. Status displays for the alarms are also included.

The "Charts" menu item offers features including controller mode selection, parameterisation, setting of the reference variable and limit values for the alarm function, as well as display of the controlled and manipulating variables. The reference variable characteristic is specified in the programmer. A total of three programs are available, each with 15 segments, which are saved together with custom controller parameters. The messages are divided into alarms (status indicators, over/under limit) and information (status monitoring, approaching the limit). The message status is colour-coded. The control station function permits simultaneous monitoring and (if required) access to both connected trainers.

Learning Objectives / Experiments

- familiarisation with and use of a process control system

stand-alone with a single trainer
- process schematics with online display of all process variables
- alarm function with logging
- parameterisation of the single controllers
- manual or automatic controller mode
- mode of operation of a programmer
- network mode with Server/Client

additionally with combination of both trainers on a PC
- control station function

RT 650.60 Process Control Software for RT 681 and RT 682

Menu for selection of trainer, controller and user interface

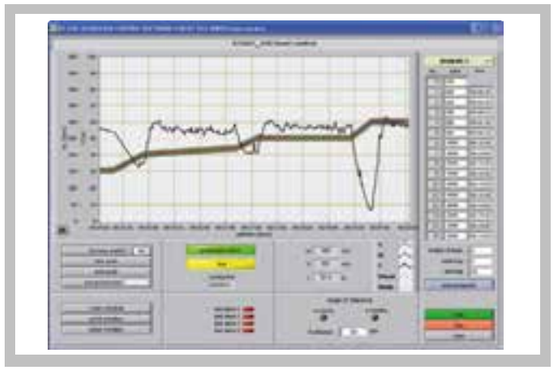

Programmer for input of a reference variable characteristic

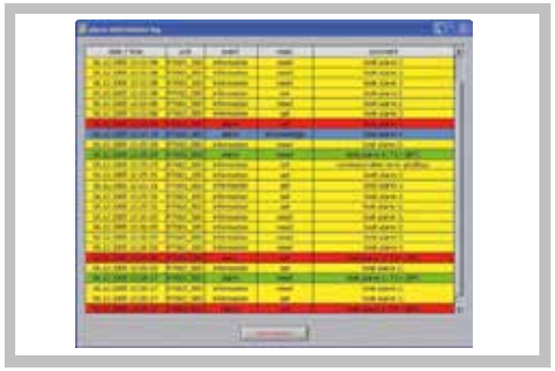

Alarm log

Specification

[1] interactive, menu-driven process control software (SCADA) for operation and monitoring of control processes
[2] control station function for simultaneous operation of both trainers
[3] process schematic with real-time data display
[4] recorder function with data saving
[5] operation and parameterisation of hardware controllers
[6] automatic operation with programmer (input of reference variable characteristics)
[7] alarm function with logging
[8] data communication via Profibus DP
[9] use together with Profibus card RT 650.12; one Profibus DP card RT 650.12 per PC workstation required

Technical Data

Recorder function with data saving
- plotting and saving of time charts
- evaluation of step responses

Programmer
- up to 3 programs with 15 values in each
- custom controller parameters for each program
- setting of a tolerance band

Alarm function with 4 programmable values
- upper and lower alarm limit
- upper and lower message limit
- comments about alarms/messages can be entered

Language selection
- 4 pre-selectable languages
- 1 user-defined language possible

Software basis: LabVIEW
System requirements
- Windows Vista or Windows 7
- PCI slot

Scope of Delivery

1 GUNT software CD
1 set of instructional material

Order Details

080.65060 RT 650.60 Process Control Software for RT 681 and RT 682

G.U.N.T Gerätebau GmbH, Hanskampring 15-17, D-22885 Barsbüttel, Phone +49 (40) 67 08 54-0, Fax +49 (40) 67 08 54-42, E-mail sales@gunt.de, Web http://www.gunt.de
We reserve the right to modify our products without any notifications.

3 MECHANICAL PROCESS ENGINEER ING

INTRODUCTION

Overview	The GUNT Learning Concepts of Mechanical Process Engineering	226

SEPARATION METHODS: CLASSIFYING AND SORTING

Overview	Basic Knowledge Classification	228
Overview	Basic Knowledge Sorting	229
CE 275	Gas Flow Classification	230
CE 264	Screening Machine	232
CE 280	Magnetic Separation	234

SEPARATION METHODS: SEPARATION IN A GRAVITY FIELD

Overview	Basic Knowledge Sedimentation	236
Overview	Basic Knowledge Flotation	237
CE 115	Fundamentals of Sedimentation	239
HM 142	Separation in Sedimentation Tanks	240
Overview	CE 587 Dissolved Air Flotation	242
CE 587	Dissolved Air Flotation	244

SEPARATION METHODS: SEPARATION IN A CENTRIFUGAL FORCE FIELD

Overview	Basic Knowledge Separation in a Centrifugal Force Field	247
CE 282	Disc Centrifuge	248
CE 235	Gas Cyclone	250
CE 225	Hydrocyclone	252

SEPARATION METHODS: FILTRATION

Overview	Basic Knowledge Filtration	254
CE 116	Cake and Depth Filtration	255
CE 117	Flow through Particle Layers	256
CE 287	Plate and Frame Filter Press	258
CE 283	Drum Cell Filter	260
CE 284	Nutsche Vacuum Filter	262
CE 286	Nutsche Pressure Filter	263
CE 285	Suspension Production Unit	264
Overview	CE 579 Depth Filtration	265
CE 579	Depth Filtration	266

COMMINUTION

Overview	Basic Knowledge Comminution	268
CE 245	Ball Mill	269

MIXING AND AGGLOMERATION

Overview	Basic Knowledge Mixing	270
Overview	Basic Knowledge Agglomeration	271
CE 320	Stirring	272
CE 255	Rolling Agglomeration	274

STORAGE AND FLOW OF BULK SOLIDS

Overview	Basic Knowledge Storage and Flow of Bulk Solids	276
CE 210	Flow of Bulk Solids from Silos	277
CE 200	Flow Properties of Bulk Solids	278

FLUIDISED BEDS AND PNEUMATIC TRANSPORT

Overview	Basic Knowledge Fluidised Beds	280
Overview	Basic Knowledge Pneumatic Transport	281
CE 220	Fluidised Bed Formation	282
CE 250	Pneumatic Transport	284

Learning unit operations of mechanical process engineering by experimentation

GUNT offers a complete range of units to learn the unit operations involved in mechanical process engineering.

Please note:
Your laboratory facilities must be suitable for operation of the units. Depending on the specific process and the materials used, sealed floors, drains, water and /or compressed air connections, ventilators, special foundations, secure material storage facilities etc. may be required.

To evaluate many of the experiments you will need professional analysis systems beyond the scope of the training system packages supplied by GUNT.

Please contact us. We will be happy to give advise.

Visit our website www.gunt.de

THE GUNT LEARNING CONCEPTS OF MECHANICAL PROCESS ENGINEERING

What does mechanical process engineering involve?

Process engineering is the engineering science of material transformation.

Mechanical process engineering involves the changes in material properties (e.g. particle size), and composition (concentration), due to mechanical effects.

The mechanical effects are forces acting on the materials. These forces may include compression forces, friction forces, impulses, or forces triggered by flow resistances.

The material systems with which mechanical process engineering concerns itself are termed dispersed systems. They consist at least of a dispersed phase and a continuous phase. The dispersed phase usually comprises large numbers of individual particles which are finely distributed (dispersed) in the continuous phase. The dispersed phase largely involves solids, however, both phases may also be liquid or gaseous. Examples of dispersed systems are bulk solids such as sand, ore-bearing rock, suspensions, emulsions and dusts.

How can the unit operations in mechanical process engineering be classified?

Unit operations in mechanical process engineering

INVOLVING CHANGE IN PARTICLE SIZE	WITHOUT CHANGE IN PARTICLE SIZE	
Comminution	Separation Methods	Mixing
Agglomeration	Storage and Flow of Bulk Solids	Fluidised Beds and Pneumatic Transport

The processes can essentially be divided into two principal categories. In the comminution and agglomeration (particle size enlargement) processes, the size of solid particles is purposely altered. In the separation, mixing, storage and transport of bulk solids, the particle size usually remains unchanged. The separation methods in many cases involve the separation of solid, dispersed phases from fluids and the division of solid compounds into fractions with different particle properties.

In fluidised beds, mixing, separation or agglomeration processes may occur, depending on the application.

Prof. Dr. Wolfgang Gorzitzke (Anhalt University of Applied Sciences), our technical advisor on mechanical process engineering

Prof. Gorzitzke advised us when we were setting up this range and contributed his many years of experience in the area of mechanical process engineering.

The unit operations…		…and the appropriate GUNT unit
Comminution		CE 245 *Ball Mill*
Agglomeration		CE 255 *Rolling Agglomeration*
SEPARATION METHODS: Classifying		CE 275 *Gas Flow Classification* CE 264 *Screening Machine*
SEPARATION METHODS: Sorting		CE 280 *Magnetic Separation*
SEPARATION METHODS: Separation in a Gravity Field		CE 115 *Fundamentals of Sedimentation* HM 142 *Separation in Sedimentation Tanks* CE 587 *Dissolved Air Flotation*
SEPARATION METHODS: Separation in a Centrifugal Force Field		CE 282 *Disc Centrifuge* CE 235 *Gas Cyclone* CE 225 *Hydrocyclone*
SEPARATION METHODS: Filtration		CE 116 *Cake and Depth Filtration* CE 117 *Flow through Particle Layers* CE 287 *Plate and Frame Filter Press* CE 283 *Drum Cell Filter* CE 284 *Nutsche Vacuum Filter* CE 286 *Nutsche Pressure Filter* CE 579 *Depth Filtration*
Mixing		CE 320 *Stirring*
Storage and Flow of Bulk Solids		CE 210 *Flow of Bulk Solids from Silos* CE 200 *Flow Properties of Bulk Solids*
Fluidised Beds and Pneumatic Transport		CE 220 *Fluidised Bed Formation* CE 250 *Pneumatic Transport*

BASIC KNOWLEDGE

CLASSIFYING

Classification is a mechanical separation method for solid compounds. It utilises either, the geometric features (size) or the settling velocities of the individual particles for the separation process. Accordingly, a distinction is made between sieve and flow classification.

Ideally, a classifier separates a feed with differing particle sizes into coarse and fine materials. The coarse material would then contain all the particles larger than a specific separation size, and the fine material all the particles smaller than that size.

The simplest example of a classifier is a sieve. In this case the separation size is determined by the sieve mesh width. With the sieve layout shown, it is possible to sort a feed into several particle size classes.

A practical example of the application of such a layout (though with larger sieve mesh widths) is the separation of ballast, gravel and sand from quarried material.

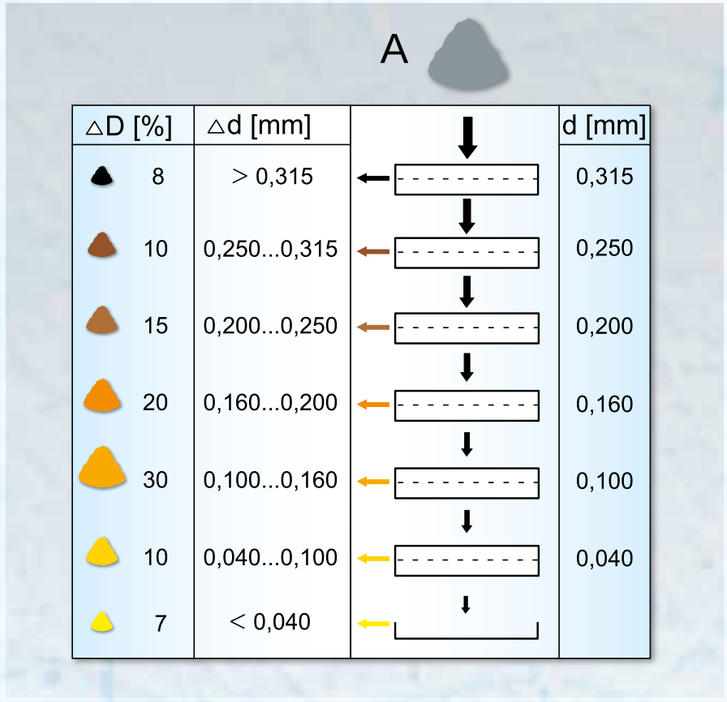

*Classification of a feed **(A)** by sieving:*
***d** sieve mesh width, Δ**d** particle size interval*
*Δ**D** proportion of particle size interval referred to feed*

In **sieving,** each particle is compared to a sieve mesh according to its size and shape. Irregularly shaped particles may be hindered in passing through the sieve mesh depending on their positioning or orientation. The particles may also obstruct each other, or adhere to each other. It is therefore necessary to provide each particle with the opportunity to pass through the mesh multiple times. This can be accomplished, for example, by vibrating, tumbling, projectile or horizontal movements of the sieves.

Flow classification may take place in gases (air) or liquids (water).

In *wet flow classification,* the differing settling velocities of particles in a liquid flow are used as a separating criterion. The settling velocity depends on the size, density and shape of the individual particles and the resultant forces due to flow resistance and weight.

In *gas flow classification (wind sifting),* an airflow is used for classification instead of a liquid. The underlying laws of the separation principle applying to this are identical to those of wet flow classification. Wind sifters are used, for example, in the cleaning of corn, to separate off toxic components such as secale cornutum (ergot).

BASIC KNOWLEDGE

SORTING

Sorting is a mechanical separation process in which a solid compound containing different material characteristics is divided into fractions with the same material characteristics. In sorting, properties such as density, colour, shape, wettability or magnetisability are utilised.

- Where *density* is applied as the separation criterion, a **float-sink sort** is suitable. A solid compound is placed in a liquid. The particles in the compound which are of lower density than the liquid float on the surface, while higher-density particles sink. One application of this is in coal preparation, in which the coal is separated from the surrounding strata.

- In **magnetic separation,** a solid compound is separated into its constituent components based on the *magnetic* properties of those components. Magnetic separators are used, for example, in coal and ore preparation.

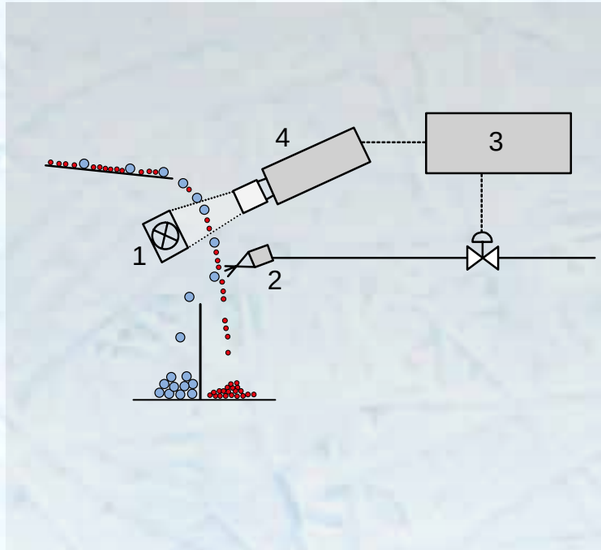

Fundamental principle of an optical sorting process:
***1** light source, **2** compressed air jet*
***3** image analyser with controller*
***4** camera*

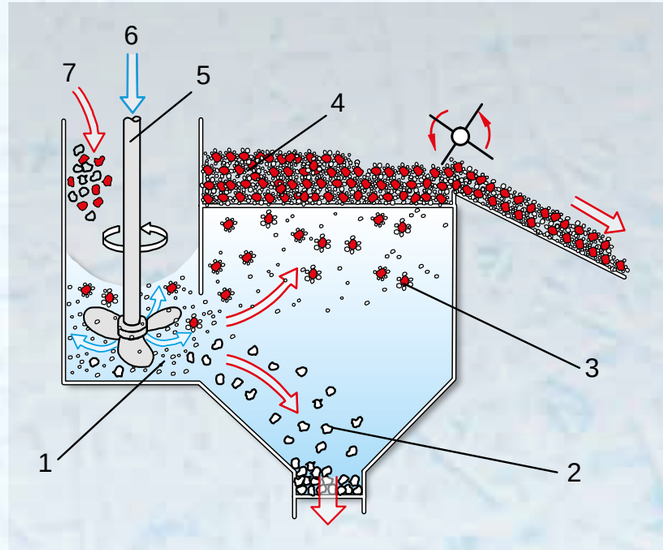

Fundamental principle of flotation:
***1** air bubbles, **2** wettable particles*
***3** non-wettable particles, **4** foam*
***5** stirrer with hollow shaft, **6** air, **7** solid compound*

- The *shape and colour* of specific particles can be recorded from a solid compound using high-resolution cameras. Using a special electronic analysis technique, the detected particles can be separated out of the compound by an airflow. **Optical sorting methods** are used in the recycling of glass.

- The *wettability* of specific materials with water in **flotation,** sorts fine-grained solids. The solid compound to be separated is placed in a container with water. Air bubbles are introduced into the water. The bubbles adhere to the solid particles which are not easily wettable with water. Those particles are carried with the bubbles to the surface of the water, where they form a solid-bearing foam which can be scooped off. No bubbles adhere to the water-wettable particles. They remain in suspension or sink to the bottom. Flotation is the most frequently applied method of sorting particles < 0.5 mm.

CE 275 Gas Flow Classification

*** Gas flow classification with a zigzag sifter**
*** Transparent duct to observe the separation process**
*** Practical experiments on a laboratory scale**

Technical Description

Zigzag sifters permit classification of solid compounds. The solid compound being separated is charged into the feed hopper. The compound is fed into the zigzag duct of the sifter at mid-height by way of a vibrating trough. An air flow flows upwards through the vertical duct. Depending on the geometry and density of the particles, they are carried along by the air or drop down due to gravity. At every bend in the duct the solid compound passes through the air flow and falls onto the opposite wall of the sifter. This corresponds to one sifting stage. Owing to the flow conditions, a vortex wake is formed between two bends of the zigzag duct. It ensures that the solid matter moves roughly perpendicular to the air flow. In this way, a transverse sift takes place at every bend. Sequencing of large numbers of such stages results in very fine separation. CE 275 features a 20-stage zigzag duct. Transparent material provides optimum observation of the processes in the duct.

A fan generates the air flow. The volumetric air flow rate and the solid mass flow are adjustable. The fine material transported upwards with the air flow is separated by a cyclone. Pressure measurement points at the relevant positions in the trainer enable the pressure loss to be determined.

Activated carbon in different particle sizes is recommended for use as the feed material. For particle size analyses of the feed and of the coarse and fine material, a balance and a screening machine (CE 264) are recommended.

The well-structured instructional material sets out the fundamentals and provides a step-by-step guide through the experiments.

Learning Objectives / Experiments

- learning the fundamental principle of wind sifting (gas flow classification)
- sorting
  * coarse material fraction
  * fine material fraction
  dependent on solid mass flow rate and volumetric air flow rate
- classifying (with CE 264)
  * fraction balance
  * separation function
  * separation size
  * sharpness of separation
  dependent on solid mass flow rate and volumetric air flow rate
- pressure losses of
  * sifter
  * cyclone
  dependent on solid mass flow rate and volumetric air flow rate

CE 275 Gas Flow Classification

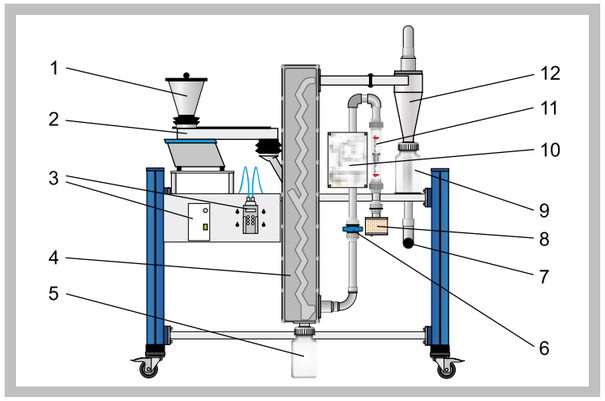

1 feed material tank, 2 vibrating trough, 3 displays and controls, 4 sifter, 5 coarse material tank, 6 valve, 7 connection for fan, 8 filter, 9 fine material tank, 10 process schematic, 11 flow meter, 12 cyclone

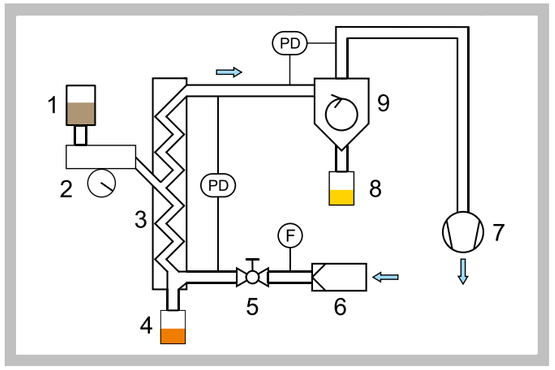

1 feed material tank, 2 vibrating trough, 3 sifter, 4 coarse material tank, 5 valve, 6 filter, 7 fan, 8 fine material tank, 9 cyclone; F volumetric flow rate, PD differential pressure

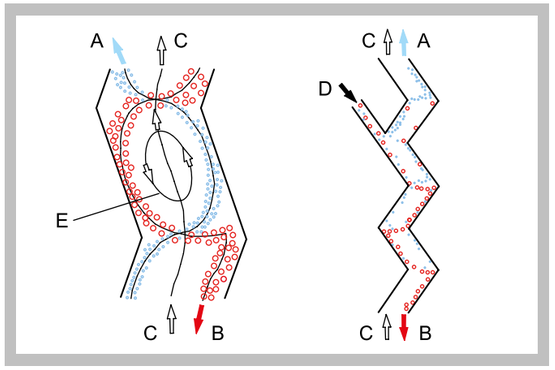

Fundamental principle of zigzag wind sifting: A fine material, B coarse material, C air flow, D feed material, E vortex wake

Specification

[1] zigzag sifter to separate solid compounds
[2] feed hopper with vibrating trough for feed of solid compound into sifter
[3] dosage of feed material by way of distance of hopper outlet from vibrating trough and frequency of vibrating trough
[4] separation of solid compound into coarse and fine material with air flow in 20-stage zigzag duct
[5] air flow generation by fan; adjustment by valve
[6] separation of fine material from air flow by gas cyclone with tangential inlet
[7] 3 tanks for feed material and coarse and fine materials
[8] recording of volumetric air flow rate and differential pressure through sifter and cyclone

Technical Data

Vibrating trough
- mass flow: max. 10kg/h
- vibration frequency: max. 3000min^{-1}

Zigzag sifter
- height: approx. 1500mm
- cross-sectional area: 40x50mm

Cyclone
- height: approx. 550mm
- diameter: 150mm

Fan
- volumetric flow rate: max. 600m³/h
- power consumption: approx. 3600W

Tanks
- feed hopper: 3L
- coarse material: 2L
- fine material: 2L

Measuring ranges
- cyclone and sifter differential pressures: 0...100mbar
- volumetric flow rate (air): approx. 10...100m³/h

Dimensions and Weight

LxWxH: 1660x790x1930mm (trainer)
Weight: approx. 180kg (trainer)
LxWxH: 660x510x880mm (fan)
Weight: approx. 30kg (fan)

Required for Operation

230V, 50Hz, 1 phase

Scope of Delivery

1 trainer
1 fan
2 packing unit with feed material
2 buckets
1 shovel
1 stopwatch
1 set of instructional material

Order Details

083.27500 CE 275 Gas Flow Classification

2E a division of G.U.N.T Gerätebau GmbH, P.O.Box 1125, D-22885 Barsbüttel, t +49 (40)67 08 54-0, f +49 (40)67 08 54-42, E-mail sales@gunt.de
We reserve the right to modify our products without any notifications. Visit our Websites: www.gunt.de | www.gunt2e.de

CE 264 *Screening Machine*

*** Professional analyser for CE 245 and CE 275**

Technical Description

The screening machine enables users to separate a mixture of solids into several classes of particle sizes. In the screening process, each particle is compared with a screen mesh in terms of size and shape. Depending on their position, particles with an irregular shape may not be able to pass through the mesh. As the screening machine is vibrating, each particle has the possibility to pass through the meshes several times. First the coarser particles are separated in the upper area. The mesh width decreases towards the bottom. To be able to adapt the machine to the respective requirements, several screens with various mesh widths are included in the scope of delivery. Scales enable the user to determine the masses of the separated classes in order to determine the particle size distribution.

Learning Objectives / Experiments

- determination of particle size distributions

Specification

[1] screening machine for particle size analysis as accessory for CE 245 and CE 275
[2] screening duration and vibration height adjustable
[3] 11 screens with different mesh widths
[4] scales for determining the mass fraction of the separated classes

Technical Data

Diameter of the screens: 200mm each
Height of the screens: 50mm each

Measuring ranges of the screening machine
- screening duration: 0...60min
- vibration height: 0...3mm
- mesh width of the screens
  45µm
  63µm
  125µm
  250µm
  500µm
  710µm
  1000µm
  1250µm
  1600µm
  2000µm
  4000µm

Measuring ranges of the scales
- max. weight: 2200g
- resolution: 10mg

Dimensions and Weight

LxWxH: 400x400x800mm (screening machine)
LxWxH: 200x270x100mm (balance)
Weight: approx. 30kg

Required for Operation

230V, 50Hz, 1 phase

Scope of Delivery

1 screening machine
1 set of screens
1 balance
1 manual

Order Details

083.26400 CE 264 Screening Machine

G.U.N.T Gerätebau GmbH, Hanskampring 15-17, D-22885 Barsbüttel, Phone +49 (40) 67 08 54-0, Fax +49 (40) 67 08 54-42, E-mail sales@gunt.de, Web http://www.gunt.de
We reserve the right to modify our products without any notifications.

A LOOK INSIDE OUR CUSTOMERS' LABORATORIES

GUNT devices have been used by our satisfied customers for many years in hundreds of technical training institutes.

Highest requirements regarding conception and details: GUNT devices are ideal to convey knowledge through practical application.

CE 280 *Magnetic Separation*

*** Sorting with a drum-type magnetic separator**

*** Feed through vibrating trough with adjustable throw**

*** Practical experiments on a laboratory scale**

Technical Description

During sorting, a solid compound is separated according to its material characteristics.

Magnetic separation is a method of sorting which utilises the magnetisability of components of a solid compound. Magnetic separators are often used in coal and ore preparation.

In the CE 280, the solid compound to be separated is charged into the feed hopper. A vibrating trough conveys the compound onto a rotating, non-magnetic drum. Its speed can be adjusted by way of a potentiometer. In one area of the drum there is a fixed permanent magnet. Non-magnetisable components drop into a collector tank due to gravity. Magnetisable components adhere to the drum in the area of the magnet, are carried along and drop into a different tank as soon as they are beyond the magnetic zone. The mass flow of the feed material can be adjusted by way of the distance of the hopper outlet from the vibrating trough and by the throw and frequency of the trough. A mixture of sand and small steel items, such as hexagon nuts, is recommended for use as the feed material.

The well-structured instructional material sets out the fundamentals and provides a step-by-step guide through the experiments.

Learning Objectives / Experiments

- learning the fundamental principle and the method of operation of a drum-type magnetic separator
- efficiency of separation process dependent on
  * mass flow of feed material
  * mixing ratio of feed material
  * type of feed material
  * drum rotation speed

CE 280 *Magnetic Separation*

1 feed hopper with height adjuster, 2 vibrating trough controls, 3 magnetic separator controls, 4 solid compound tank, 5 magnetic materials tank, 6 non-magnetic materials tank , 7 magnetic separator, 8 vibrating trough

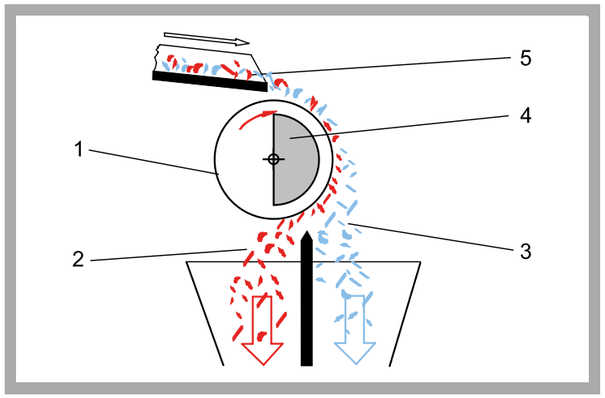

Fundamental principle of drum-type magnetic separators: 1 rotating drum (non-magnetic), 2 magnetisable components, 3 non-magnetisable components, 4 permanent magnet, 5 feed material

Specification

[1] drum-type magnetic separator for separation of magnetisable components from a solid compound
[2] separation by a fixed permanent magnet in an area of a rotating, non-magnetic drum
[3] feed hopper with vibrating trough for feed of solid compound to drum
[4] dosage of feed material by way of distance of hopper outlet from vibrating trough, throw and frequency of vibrating trough
[5] drum rotation speed adjustable by electric motor with potentiometer
[6] 2 steel tanks for separated fractions and 1 tank for solid compound

Technical Data

Feed hopper capacity: 25L
Vibrating trough
- throw: 0,2...1,5mm
- vibration frequency: 50Hz or 100Hz

Drum
- diameter: 220mm
- length: 300mm
- magnetic field range: 180°
- speed: 0...30min^{-1}

Motor
- power consumption: 250W

Max. particle size
- non-magnetic: 20mm
- magnetic: 20mm

Tanks
- 2x 15L
- 1x 20L

Dimensions and Weight

LxWxH: 1500x700x1700mm
Weight: approx. 175kg

Required for Operation

230V, 50Hz, 1 phase

Scope of Delivery

1 trainer
1 shovel
1 set of instructional material

Order Details

083.28000 CE 280 Magnetic Separation

G.U.N.T Gerätebau GmbH, Hanskampring 15-17, D-22885 Barsbüttel, Phone +49 (40) 67 08 54-0, Fax +49 (40) 67 08 54-42, E-mail sales@gunt.de, Web http://www.gunt.de
We reserve the right to modify our products without any notifications.

BASIC KNOWLEDGE

SEDIMENTATION

Mechanical process engineering in many cases utilises gravity to separate different phases. Gravity can be used to separate a solid phase off from a fluid. When solid particles are suspended in a fluid, gravity causes them to sink. For this to happen, the density of the solid must be greater than that of the fluid. The process is termed sedimentation. Fluid is the umbrella term for gases and liquids. It is used because most physical laws apply equally to both.

In terms of the **separation of solids from gases** the phrase "dust separation" is also used. The solid phase may, on the one hand, be a usable material, on the other hand, it may be an unwanted material (gas purification). In gravity separators the gas flow is routed at slower velocity through a separator channel. On their way, the particles sink and are collected.

In practice the **separation of solid/liquid mixtures** (suspensions) takes place in sedimentation tanks through which the suspension continuously flows. The shape of the base may be rectangular or circular.

In rectangular tanks the suspension flows in on one side and flows out over the rim on the opposite side. On the way, the solid particles sink to the bottom of the tank. The tank floor is positioned at an angle to aid discharge of the solid material. There are also devices by which the settled solid (sludge) can be cleared from the tank bottom. Sedimentation tanks are mostly used in water treatment.

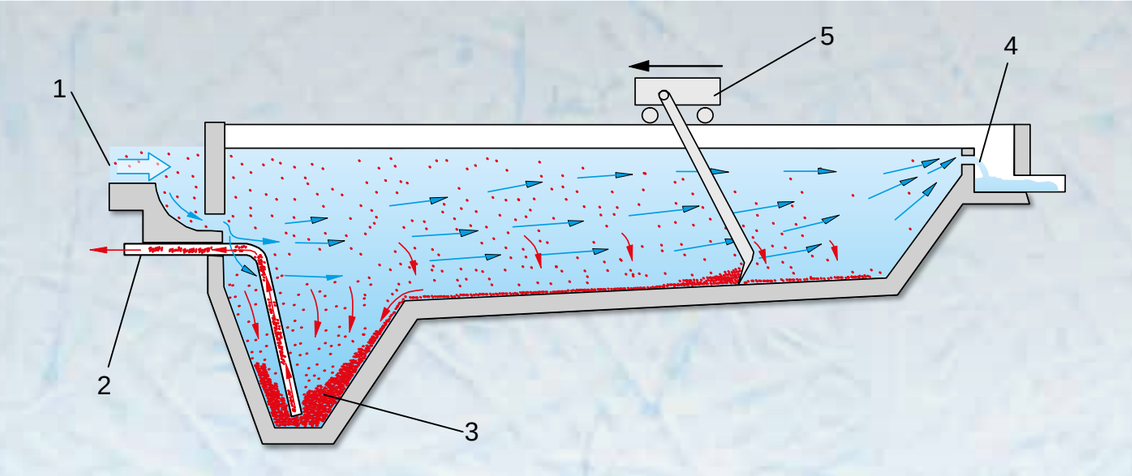

Sedimentation tank:
***1** wastewater inlet, **2** sludge extractor, **3** sludge hopper, **4** clean water overflow*
***5** cart for sludge clearing*

The *settling velocity* of the particles is the key variable in the design of sedimentation tanks and separator channels. It is directly related to the particle size, the particle shape (flow resistance) and the difference in density between the fluid and solid. If the particles in a suspension are very fine, or if the difference in density between the fluid and solid is slight, the settling velocity is very low. A technically useful separation by means of sedimentation is then not possible. Another variable influencing the settling velocity in liquids is the concentration of solid particles. At high concentrations, sedimentation is hindered. As the concentration increases, the so-called cluster settling velocity becomes less than the velocity of the single particles.

BASIC KNOWLEDGE

FLOTATION

Suspended solids with a density close to or less than that of water can't be removed by sedimentation. Such solids would sediment only very slowly or would remain suspended. The aim of flotation is to increase the buoyancy of the solids. This is done by forming small gas bubbles that attach to the solids. This makes them rise to the surface of the water where they can be skimmed off. It is required that the solids should be hydrophobic. That means that they are more wettable with air than with water. The separated solids are termed float. The key factor influencing flotation is the size of the gas bubbles. The smaller they are the less will be their rate of rise.

This is compensated by larger numbers of small gas bubbles attaching to the solids than large bubbles.

The main process used in water treatment is **dissolved air flotation.** Another flotation variant is electro-flotation. The two processes differ primarily in the way the gas bubbles are produced.

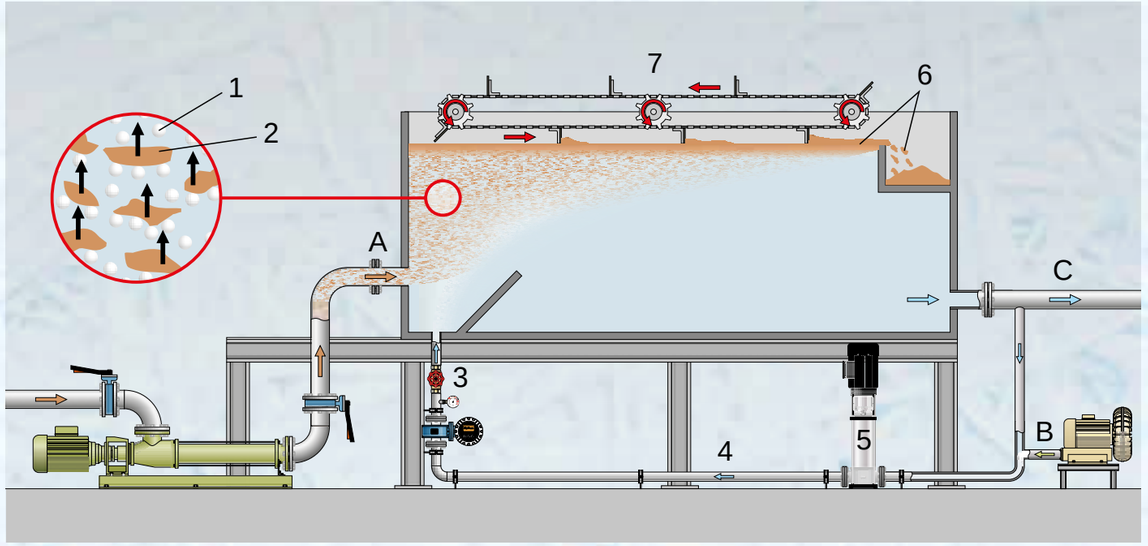

Fundamental principle of dissolved air flotation:
***1** air bubbles, **2** solids, **3** relief valve, **4** recycle water, **5** pump, **6** float, **7** scraper*
***A** raw water, **B** compressed air, **C** treated water*

Dissolved air flotation

Dissolved air flotation uses the fact that the solubility of air in water increases as the pressure rises at constant temperature. Some of the treated water is saturated with air under pressure (recycle water). The recycle water is then injected into the flotation tank through a special valve that causes an instantaneous reduction in pressure (relief valve). The sudden relief to atmospheric pressure causes the dissolved air to precipitate as a cloud of small bubbles. A scraper clears the float from the surface of the water. To improve the performance of the process, coagulants and flocculants may be added to the raw water. This helps to optimise the size of the solids so that more air bubbles can be attached to the solids.

Application examples

Industrial water treatment
- paper industry
- food industry
- oil refineries
- plastics industry

Domestic water treatment
- secondary clarification, if the activated sludge sediments very slow
- supplementing or replacing primary clarification

INSTRUCTIONAL MATERIAL AND SOFTWARE

GUNT's policy is:
High-quality hardware and clearly laid-out instructional materials ensure the teaching and learning success of an experimental unit. The core elements of the instructional material provided to accompany the units are reference experiments conducted by ourselves. The description of the experiment incorporates the detailed set-up, through to interpretation of the results obtained. A group of experienced engineers devise and maintain the accompanying instructional material.

Our software – in our context meaning computerised data acquisition programs – always comes with comprehensive online help to explain the features offered the detailed use of the program. GUNT software is developed and written in-house by another group of experienced engineers.

CE 115 *Fundamentals of Sedimentation*

* Separation of suspensions by sedimentation

Technical Description

Sedimentation is often used to clarify suspensions. In the process, the solid particles move downwards in a liquid owing to their density.

Using CE 115, the sedimentation processes in different suspensions can be investigated and compared. Five transparent cylindrical tanks are provided for the purpose. The suspensions are prepared in measuring cups, poured into the removable tanks, and mixed by shaking. The tanks are then mounted vertically on the experimental unit. To aid observation of the sedimentation process, the tanks are backlit.

Learning Objectives / Experiments

- determination and comparison of the settling velocities of solids in suspensions dependent on the solid density and concentration and the liquid density and viscosity
- influence of coagulants on the settling velocity

Specification

[1] experiments in the fundamentals of sedimentation
[2] 5 transparent tanks with scale for comparison of the settling velocities of solids in various suspensions
[3] tanks removable for filling, mixing and cleaning
[4] tanks backlit by fluorescent tubes to aid observation
[5] 3 measuring cups for preparation of suspensions
[6] pycnometer to determine the density of the liquids and solids
[7] stopwatch to record the sedimentation time
[8] recommended accessories: balance, coagulant

Technical Data

Tanks
- length: 1000mm
- inside diameter: 42mm
- scale division: 1mm
- material: PMMA

Fluorescent tubes
- power: 6x 18W

Measuring cups
- capacity: 2000ml
- scale division: 50ml

Stopwatch
- resolution: 1/100sec

Dimensions and Weight

LxWxH: 750x460x1160mm
Weight: approx. 53kg

Required for Operation

230V, 50/60Hz, 1 phase or 120V, 60Hz/CSA, 1 phase
Coagulant (recommendation)

Scope of Delivery

1 experimental unit
3 measuring cups
1 stopwatch
1 pycnometer
1 set of instructional material

Order Details

083.11500 CE 115 Fundamentals of Sedimentation

G.U.N.T Gerätebau GmbH, Hanskampring 15-17, D-22885 Barsbüttel, Phone +49 (40) 67 08 54-0, Fax +49 (40) 67 08 54-42, E-mail sales@gunt.de, Web http://www.gunt.de
We reserve the right to modify our products without any notifications.

HM 142 Separation in Sedimentation Tanks

*** Solid/liquid separation in a sedimentation tank**

*** Visualisation of flow conditions**

Technical Description

In sedimentation tanks, solids are separated out of suspensions under the influence of gravity. For this, the density of the solid particles must be greater than that of the liquid.

With HM 142, the factors influencing the separation process in sedimentation tanks can be investigated. First a suspension of water and precipitated calcium carbonate is prepared in a tank. A pump delivers the suspension to the sedimentation tank. In the inlet area of the sedimentation tank the suspension intermingles with fresh water. The mixture flows over an inlet weir. On their way through the sedimentation tank the solids sink to the bottom. The treated water flows out by way of the weir at the sedimentation tank outlet.

The solid concentrations at the sedimentation tank inlet and outlet are determined by means of two Imhoff cones. The mass separated in the sedimentation tank can be determined from the difference between them. The flow rates of the suspension and the fresh water are adjusted by valves and indicated by flow meters. This enables the mixing ratio - and thus the solid concentration of the mixture - to be adjusted. In order to ensure a uniform mix of the suspension and prevent premature sedimentation, a portion of the suspension is fed back into the suspension tank by way of a bypass. To investigate the flow conditions, ink can be added with a piston burette to the fresh water stream as a tracer substance. The mixed-in volume of ink is entered using keys and indicated on a display. To provide enhanced observation of the flow conditions and settling processes, the sedimentation tank is made of transparent material.

A baffle plate can be positioned in the sedimentation tank to impede the flow. Its horizontal and vertical positioning in the sedimentation tank is adjustable. This enables the flow conditions and the efficiency of the separation process to be influenced.

The well-structured instructional material sets out the fundamentals and provides a step-by-step guide through the experiments.

Learning Objectives / Experiments

- learning the fundamental principle of separation of solids from suspensions in a sedimentation tank
- efficiency of the separation process dependent on
  - * solid concentration of suspension
  - * flow rate
  - * position of baffle plate
- investigation of flow conditions dependent on
  - * flow rate
  - * position of baffle plate

HM 142 Separation in Sedimentation Tanks

1 suspension flow meter, 2 fresh water flow meter, 3 switch box, 4 bypass valve, 5 suspension pump, 6 suspension tank, 7 storage bin, 8 outlet, 9 sedimentation tank, 10 baffle plate, 11 fresh water/suspension mixing zone

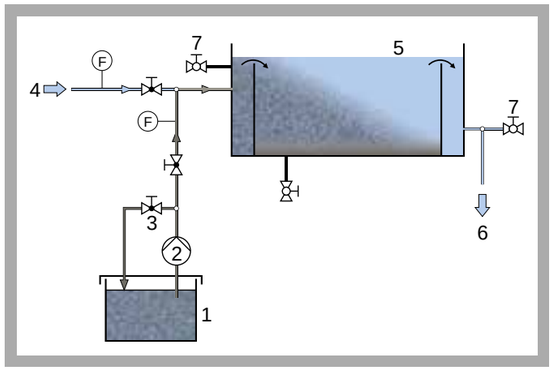

1 suspension tank, 2 pump, 3 bypass valve, 4 fresh water inlet, 5 sedimentation tank, 6 treated water outlet, 7 sampling points; F flow rate

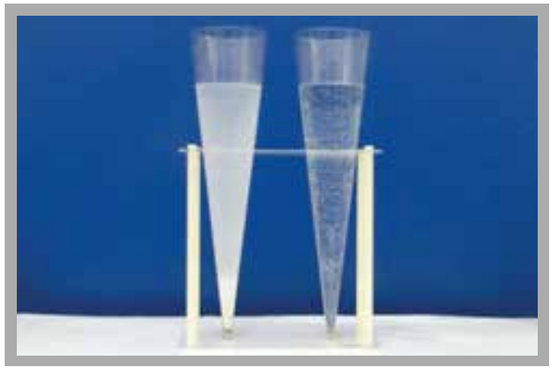

Determination of solid concentrations at sedimentation tank inlet and outlet by Imhoff cones

Specification

[1] separation of suspensions by sedimentation in transparent sedimentation tank
[2] tank with pump to prepare and deliver a suspension comprising water and precipitated calcium carbonate
[3] bypass to tumble and homogenise the suspension
[4] mixing of the suspension with fresh water in sedimentation tank inlet zone
[5] adjustment of fresh water and suspension flow rate by valves
[6] precise piston burette for metering of ink to visualise flow conditions in the sedimentation tank
[7] influencing of flow conditions in the sedimentation tank with baffle plate that can be positioned
[8] determination of solid concentrations at sedimentation tank inlet and outlet by Imhoff cones

Technical Data

Sedimentation tank
- LxWxH: 1000x400x230mm
- capacity: approx. 80L
- material: plexiglass

Suspension tank
- capacity: approx. 100L
- material: stainless steel

Pump
- max. flow rate: 75L/min
- max. head: 5m

Piston burette
- metering accuracy: 0,15% of nominal volume
- volume adjustment range: 0...20ml
- resolution: 0,01ml

Imhoff cones
- capacity: each 1000ml

Measuring ranges
- flow rate (fresh water): 60...640L/h
- flow rate (suspension): 0...1,9L/min

Dimensions and Weight

LxWxH: 1900x670x1590mm
Weight: approx. 190kg

Required for Operation

230V, 50/60Hz, 1 phase or 120V, 60Hz, 1 phase
Water connection (200...300L/h), drainage

Scope of Delivery

1 trainer
1 piston burette
2 Imhoff cones
1 packing unit of precipitated calcium carbonate
1L ink
1 set of instructional material

Order Details

070.14200 HM 142 Separation in Sedimentation Tanks

2E a division of G.U.N.T Gerätebau GmbH, P.O.Box 1125, D-22885 Barsbüttel, t +49 (40)67 08 54-0, f +49 (40)67 08 54-42, E-mail sales@gunt.de
We reserve the right to modify our products without any notifications. Visit our Websites: www.gunt.de | www.gunt2e.de

CE 587 DISSOLVED AIR FLOTATION

The flotation process most frequently used in water treatment is dissolved air flotation. CE 587 enables this process to be demonstrated clearly.

- continuous and practical process
- conditioning of the raw water by flocculation
- flotation tank with electrically driven scraper
- control of pH value
- high quality instrumentation and control

Process schematic of CE 587

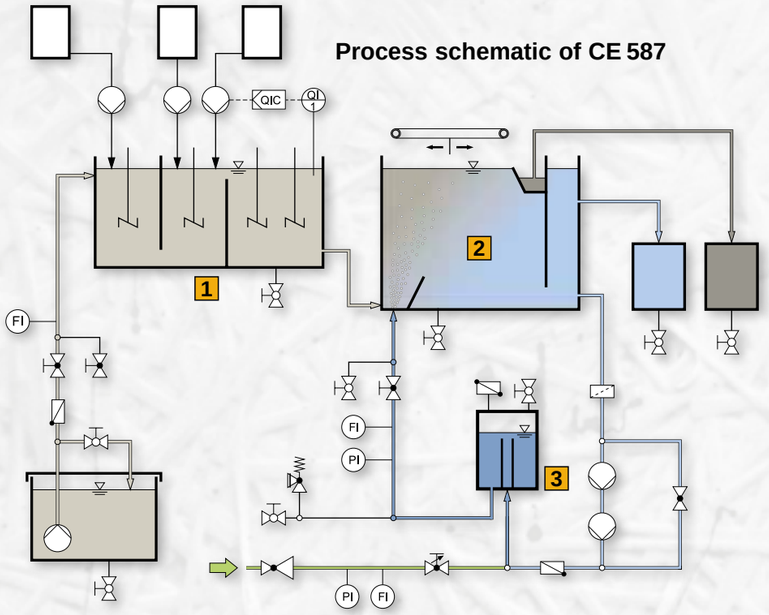

1 *Flocculation tank with stirring machines*

2 *Flotation tank with scraper*

3 *Components to generate the bubbles*

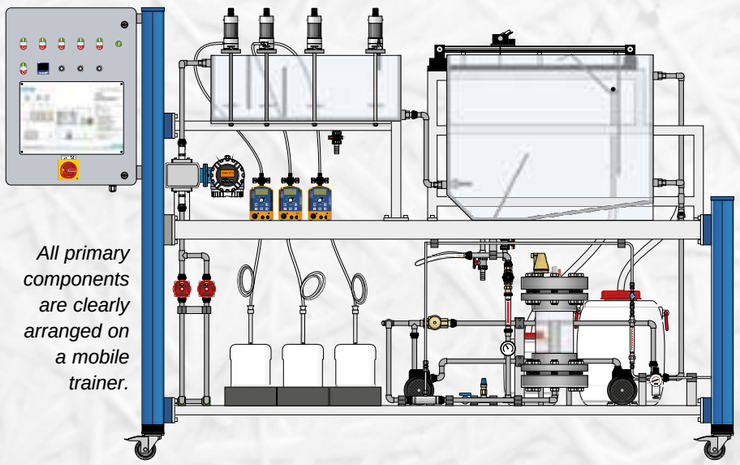

All primary components are clearly arranged on a mobile trainer.

University of Applied Sciences in Münster (Germany)

Be our next satisfied customer.

The electrically driven scraper clears the float from the surface of the water.

The recycle water enters the flotation tank: The sudden relief to atmospheric pressure causes the dissolved air to precipitate as a cloud of small bubbles.

You can find an interesting film of CE 587 on our 2E website **www.gunt2E.de**

Use of high quality components: Magneto-inductive flow rate sensor and metering pumps

THE INSTRUCTIONAL MATERIAL

We have compiled a comprehensive range of instructional material for the CE 587 which will greatly assist you in getting to know the system and in preparing your lessons and laboratory experiments and exercises.

Materials delivered as paper printouts in a folder and additionally as PDF files on a CD.

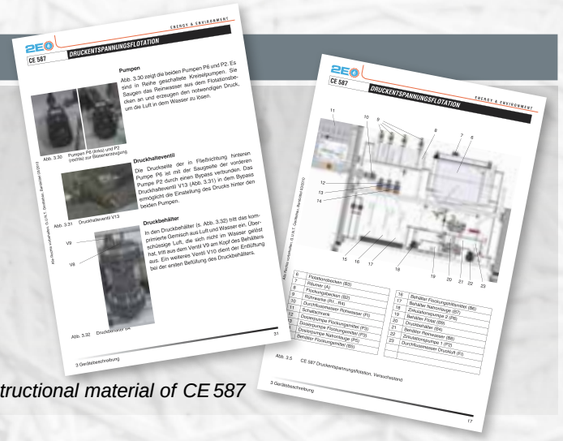

Instructional material of CE 587

CE 587 Dissolved Air Flotation

The illustration shows: Supply unit (left) and trainer (right)

*** Demonstration of dissolved air flotation**

*** Flocculation to condition the raw water**

*** Scraper to remove the float**

Technical Description

CE 587 demonstrates the clarification of raw water containing solids using the dissolved air flotation process.

First, a suspension (raw water) is prepared in a tank. From here the raw water flows into a flocculation tank divided into three chambers. By adding a coagulant in the first chamber the repulsive forces between the solid particles are cancelled out. The solid particles combine into flocs. To create larger flocs a flocculant is added in the second chamber. The coagulant causes a drop of the pH value. By adding caustic soda the pH value of the water can be increased again. In the following third chamber of the flocculation tank low flow velocities are present to prevent any turbulence. Turbulence would impede the formation of flocs.

From the flocculation tank the raw water enters the flotation tank. A part of the treated water is removed from the flotation tank and saturated with air under pressure. This water (recycle water) enters via a relief valve so that it suddenly expands to atmospheric pressure. This creates minute air bubbles which attach to the flocs. This makes the flocs rise to the surface of the water. Using a scraper the floating flocs (float) can be moved into a collection channel.

Flow rates, pressures and pH values are masured. The pH value can additionally be controlled. The pressure of the recycle water can be adjusted.

Trivalent metallic salts are usually well suited as coagulants. Common flocculants are organic polymers. Powdered activated carbon can be used to produce the raw water.

The well-structured instructional material sets out the fundamentals and provides a step-by-step guide through the experiments.

Learning Objectives / Experiments

- functional principle of dissolved air flotation
- creation of a stable operating state
- effects of various parameters
  - * coagulant concentration
  - * flocculant concentration
- determination of the hydraulic loading rate (rising velocity)

CE 587 Dissolved Air Flotation

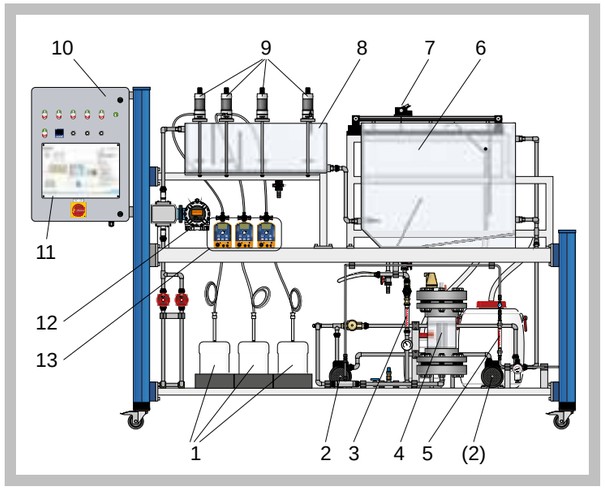

1 chemical tanks, 2 circulation pumps, 3 flow meter (recycle water), 4 pressure tank, 5 flow meter (air), 6 flotation tank, 7 scraper, 8 flocculation tank, 9 stirring machines, 10 switch cabinet, 11 process schematic, 12 electromagnetic flow rate sensor (raw water), 13 metering pumps

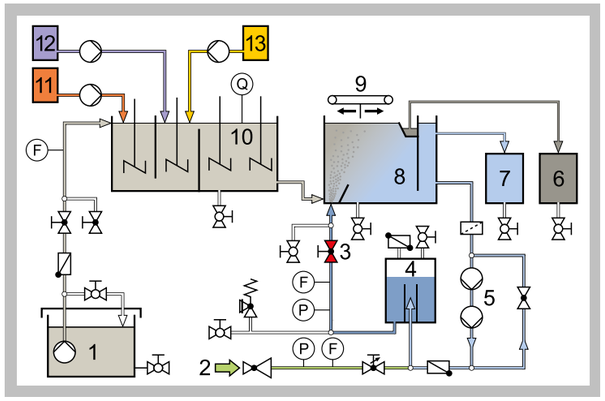

1 raw water, 2 compressed air, 3 relief valve, 4 pressure tank, 5 circulation pumps, 6 sludge (float), 7 treated water, 8 flotation tank, 9 scraper, 10 flocculation tank, 11 coagulant, 12 flocculant, 13 caustic soda; F flow rate, P pressure, Q pH value

Specification

[1] removal of solids from raw water using dissolved air flotation
[2] conditioning of the raw water by flocculation
[3] 3 Metering pumps for chemicals
[4] flocculation tank with 3 chambers and 4 stirring machines
[5] flotation tank with electrically driven scraper
[6] pressure tank and 2 circulation pumps
[7] relief valve
[8] separate supply unit with tank and pump for raw water
[9] electromagnetic flow rate sensor
[10] measurement of flow rate, pressure and pH value
[11] control of the pH value

Technical Data

Tanks
- flotation tank: 150L
- flocculation tank: 45L
- raw water: 300L
- treated water: 80L
- sludge (float): 15L

Raw water pump
- max. flow rate: 135L/min
- max. head: 7,0m

Circulation pumps
- max. flow rate: each 18L/min
- max. head: each 50m

Metering pumps
- max. flow rate: each 2,1L/h

Stirring machines
- max speed: each 600min^{-1}

Measuring ranges
- flow rate (raw water): 0...550L/h
- flow rate (recycle water): 30...320L/h
- flow rate (air): 20...360L/h
- pH value: 1...14
- pressure (recycle water): 0...6bar

Dimensions and Weight

LxWxH: 1560x790x1150mm (supply unit)
LxWxH: 3100x790x1950mm (trainer)
Total weight: approx. 550kg

Required for Operation

230V, 50/60Hz, 1 phase or 120V, 60Hz, 1 phase
Water connection, drainage, compressed air, caustic soda, iron(III) sulfate, flocculant, powdered activated carbon (recommendation)

Scope of Delivery

1 supply unit
1 trainer
1 set of hoses
1 set of instructional material

Order Details

083.58700 CE 587 Dissolved Air Flotation

2E a division of G.U.N.T Gerätebau GmbH, P.O.Box 1125, D-22885 Barsbüttel, t +49 (40)67 08 54-0, f +49 (40)67 08 54-42, E-mail sales@gunt.de
We reserve the right to modify our products without any notifications. Visit our Websites: www.gunt.de | www.gunt2e.de

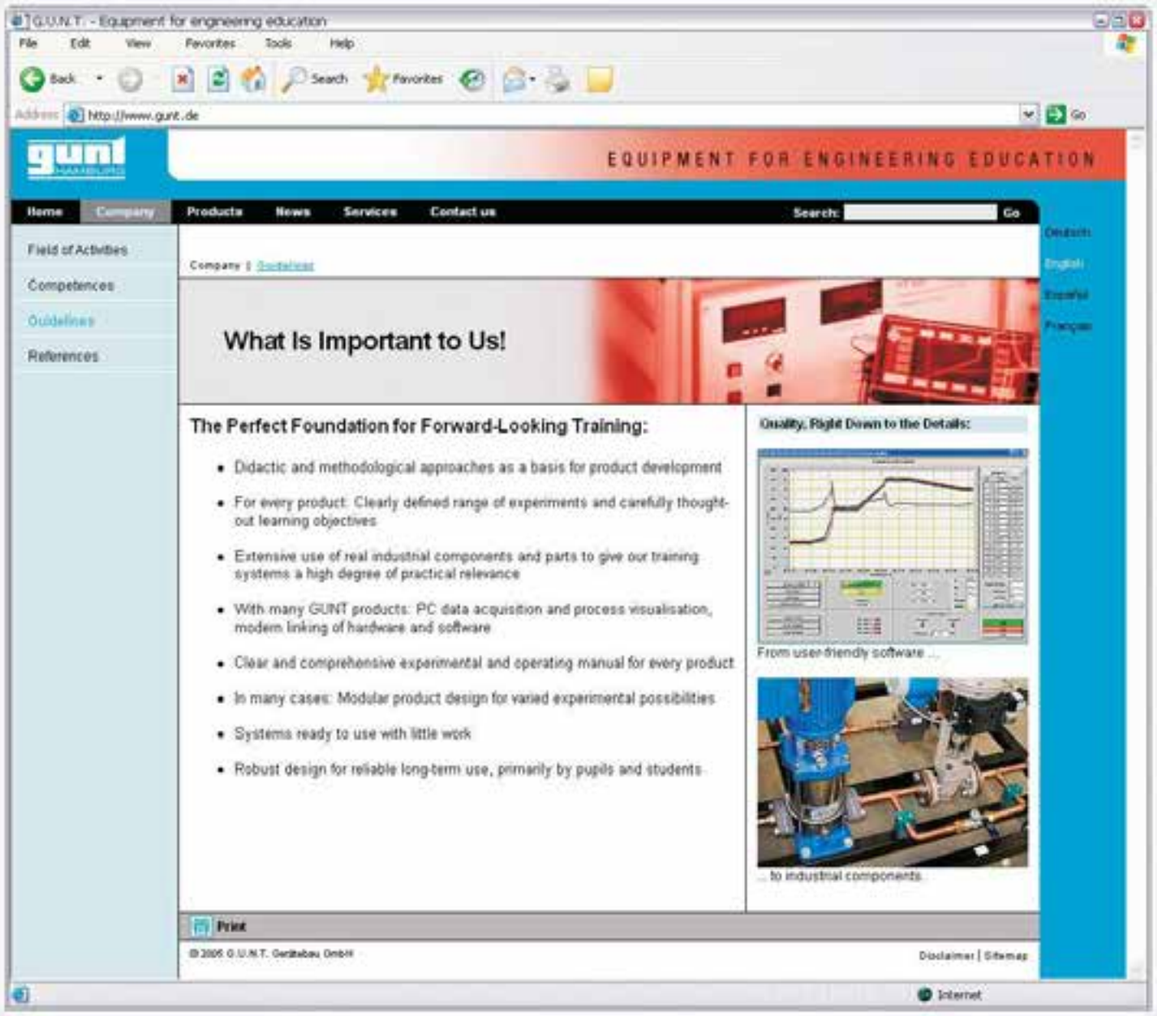

Visit our website, where you will find all you need to know, including all the latest news.

@ www.gunt.de

BASIC KNOWLEDGE

SEPARATION IN A CENTRIFUGAL FORCE FIELD

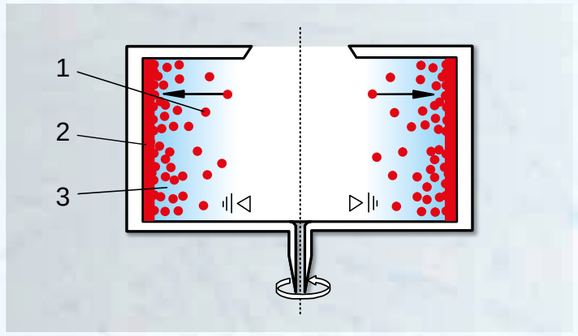

Sedimentation centrifuge:
***1** solid particles, **2** sediment, **3** liquid*

As well as gravity, centrifugal force can also be used as the driving force for phase separation processes. The centrifugal force can be generated either by guiding the flow of the fluid, or by rotating vessels (centrifuges). The difference in density between the fluid and the solid particle results in the separation. The higher-density solid particles are drawn outwards by the centrifugal force more strongly than the fluid particles.

The forces occurring in the centrifugal force field of a **centrifuge** may be many times higher compared to those produced by gravity. Consequently, smaller, specifically lighter particles can be separated in a centrifugal force field than in a gravity field.

Sedimentation and filter centrifuges can be used to separate solid/liquid compounds:

- In *sedimentation centrifuges,* the solid particles collect as sediment on the jacket wall. Sedimentation centrifuges may also have internal fittings such as inclined discs set at an oblique angle to the centrifugal force field (disc centrifuges). This layout reduces the settling distance and time. Disc centrifuges can also be used to separate emulsions such as water and oil.
- In *filter centrifuges,* the jacket of the rotating vessel has holes in it. On the inside of the jacket is a filter medium (a fine sieve or filter cloth). The centrifugal forces drive the suspension towards the filter medium, where the solid particles form a filter cake.

In **cyclones**, the centrifugal force needed for separation is achieved by guiding the fluid flow. Cyclones are cylindrical at the top and taper downwards.

The solid-laden fluid enters the cyclone tangentially at the top and is forced into a revolving flow by the cyclone wall. A rotating (primary), downward-moving vortex is created. At the bottom of the cyclone the primary vortex is reversed. As the secondary vortex, the fluid moves upwards in the centre of the cyclone towards the immersion tube, where it exits. The main separation process takes place in the primary vortex. Owing to the centrifugal forces and the difference in density between the fluid and the solid, the solid particles move towards the wall.

In a *gas cyclone,* the solid particles slide downwards and collect at the bottom. Gas cyclones are in widespread use because they can also be used to separate solids from hot gases.

In a *hydrocyclone,* the solid-enriched portion of the liquid close to the wall spirals downwards to the bottom where - in contrast to the gas cyclone - it is continuously discharged. Hydrocyclones are used, for example, in the cleaning of contaminated soils.

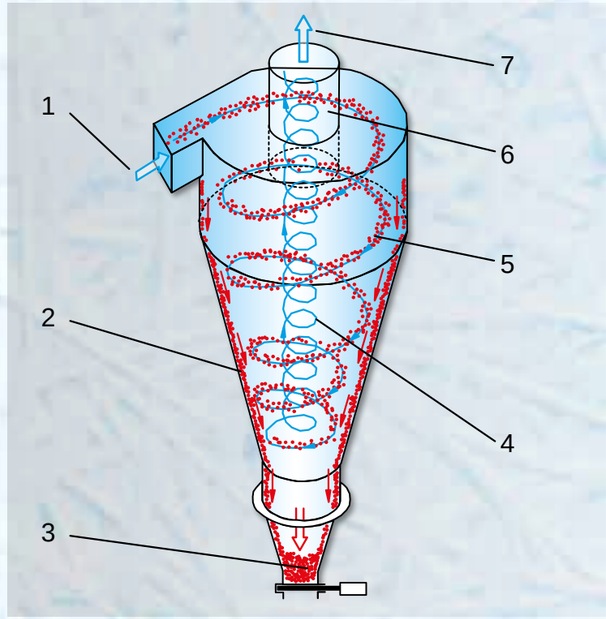

*Gas cyclone: **1** raw gas, **2** separated dust,*
***3** collected dust, **4** secondary vortex, **5** primary vortex*
***6** immersion tube, **7** dedusted gas*

CE 282 Disc Centrifuge

*** Continuous separation of emulsions**

*** Maintenance and inspection exercises possible**

*** Practical experiments on a laboratory scale**

Technical Description

A disc centrifuge can be used to separate mixtures of immiscible liquids.

The emulsion to be separated is prepared in a stirred tank. Water/oil is recommended for use as the emulsion. A stirring machine with a speed control mixes the two liquid phases. In the course of the mixing process the oil droplets are distributed ever more finely in the water. When the droplet sizes are smaller the emulsion remains stable for longer.

A pump delivers the emulsion up into the centre of the rotating centrifuge. The emulsion is delivered by way of the distributor base via riser ducts into the disc intermediate chambers. The driving force of the separation process is centrifugal force. It ensures that the specifically heavier liquid droplets (water) are drawn more strongly towards the outside than the specifically lighter liquid droplets (oil). The settling distance and time are shortened by the disc arrangement set at an oblique angle to the field of acceleration. On the underside of the rotating discs the specifically heavier portion of the emulsion moves downwards and outwards. The lighter portion flows inwards on the top side of the discs. The separated liquids exit the centrifuge by way of outlets and can be collected in tanks.

The rotation speed of the centrifuge can be adjusted by way of a potentiometer. A valve is used to adjust the flow rate of the emulsion due to be separated. Various types of stirrer are available to perform the stirring. A photometer is recommended for analysis of the separated fractions.

The operating and service instructions form the basis for learning how to perform an extensive range of maintenance and inspection operations on the centrifuge.

The well-structured instructional material sets out the fundamentals and provides a step-by-step guide through the experiments.

Learning Objectives / Experiments

- production of stable emulsions with different types of stirrer
- learning the fundamental principle of disc centrifuges
- influence of rotation speed and feed flow rate on separation result
- characteristic of concentration of the light phase in the stirred tank over time (with photometer)
- startup/shutdown and operation of a disc centrifuge
- maintenance
- cleaning
- inspection

CE 282 Disc Centrifuge

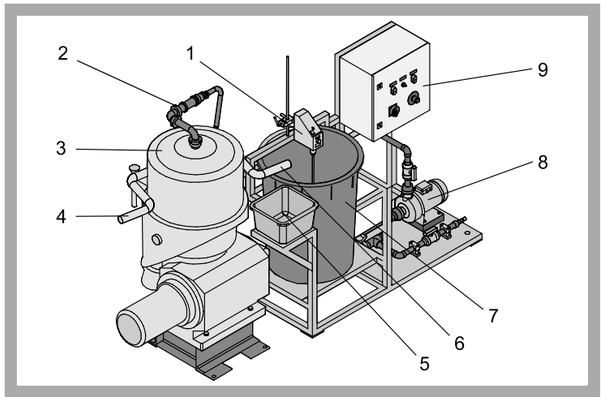

1 stirring machine, 2 emulsion inlet, 3 centrifuge, 4 light phase outlet, 5 light phase collector tank, 6 heavy phase outlet, 7 stirred tank, 8 pump, 9 switch box with controls

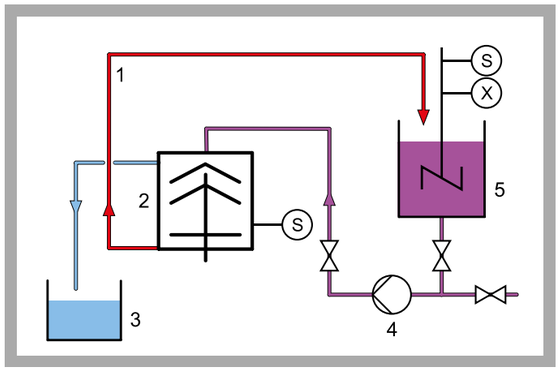

1 heavy phase, 2 disc centrifuge, 3 light phase, 4 pump, 5 emulsion stirred tank; S speed, X torque

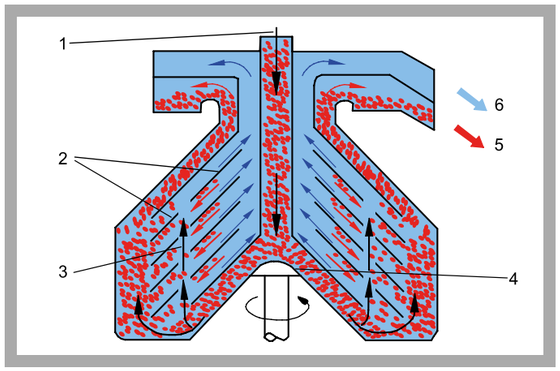

Fundamental principle of disc centrifuges: 1 emulsion inlet, 2 discs, 3 riser duct, 4 inlet base, 5 heavy phase outlet, 6 light phase outlet

Specification

[1] continuous separation of emulsions with a disc centrifuge
[2] HDPE tank with stirring machine to produce an emulsion
[3] centrifugal pump to deliver the emulsion to the centrifuge
[4] adjustment of emulsion flow rate by valve
[5] centrifuge speed adjustable by potentiometer
[6] speed-controlled stirring machine with digital torque indicator
[7] 3 interchangeable stirrers
[8] collector tank for separated phase

Technical Data

Disc centrifuge
- power consumption: 7500W
- max. usable diameter: approx. 300mm
- max. speed: 6480rpm

Stirring machine
- power consumption: 140W
- speed: 30...1000rpm

Stirrer
- 2x paddle stirrers: 3/10 holes
- 1x stirrer with 3 blades

Centrifugal pump
- max. flow rate: 300L/min
- max. head: 9,5m

Tanks
- stirred tank: 200L
- collector tank: 14L

Measuring ranges
- speed (centrifuge): approx. 0...8000min^{-1}
- speed (stirring machine): 30...1000min^{-1}
- torque (stirring machine): 0...200Ncm

Dimensions and Weight

LxWxH: 3000x1000x1800mm
Weight: approx. 1100kg

Required for Operation

400V, 50Hz, 3 phases
Water connection: 200...300L/h
Special foundations and drainage required

Scope of Delivery

1 disc centrifuge
1 set of hoses
1 set of tools
1 set of instructional material

Order Details

083.28200 CE 282 Disc Centrifuge

G.U.N.T Gerätebau GmbH, Hanskampring 15-17, D-22885 Barsbüttel, Phone +49 (40) 67 08 54-0, Fax +49 (40) 67 08 54-42, E-mail sales@gunt.de, Web http://www.gunt.de
We reserve the right to modify our products without any notifications.

CE 235 Gas Cyclone

The illustration shows: trainer (left) and fan (right).

*** Solid separation with a gas cyclone**

*** Transparent cyclone to observe the separation process**

*** Practical experiments on a laboratory scale**

Technical Description

One area of application of gas cyclones is the pre-filtration of solids from gases. Gas cyclones have no moving parts, and so are low-maintenance systems. Gas cylones can also be used in conjunction with high gas temperatures. For these reasons they are in widespread use.

This trainer was developed in cooperation with the **Institute for Solids Process Engineering and Particle Technology at TU Hamburg-Harburg**. A disperser is used to disperse the feed material (quartz powder recommended) finely in an air flow. The air flow laden with solid material (raw gas) in this way is fed tangentially into the cyclone at the top. In the cyclone, the air flow moves downwards as a rotating primary vortex. At the bottom of the cyclone the vortex is reversed. In the middle of the cyclone it moves as a secondary vortex back up towards the immersion tube, where the cleaned gas emerges from the cyclone. The main separation process takes place in the primary vortex. Owing to the centrifugal forces and the difference in density between the air and the solid, the coarse solid particles move towards the wall. They slide down the wall and are collected in a tank at the bottom of the cyclone. No complete separation of the entire solid material takes place. The fine particles which are smaller than the separation size are ideally discharged from the immersion tube at the top with the secondary vortex. This fine material is separated out of the air flow by a filter. The separation size defines the theoretical boundary between the fine and coarse material.

The solid content of the raw gas can be adjusted by means of the disperser and a valve for the volumetric air flow rate. To prevent loading of the air flow with particles upstream of the disperser, the drawn-in room air is filtered. A fan generates the air flow. Pressure measurement points at the relevant positions in the trainer enable to determine the pressure loss.

Using a suitable analysis device (such as a diffraction spectrometer), a separation function can be produced and the separation size determined.

The well-structured instructional material sets out the fundamentals and provides a step-by-step guide through the experiments.

Learning Objectives / Experiments

- influence of solid content and volumetric air flow rate on
  - * pressure loss at the cyclone
  - * degree of separation
  - * separation function and separation size (with suitable analysis device)
- comparison of pressure loss and degree of separation with theoretically calculated values

CE 235 Gas Cyclone

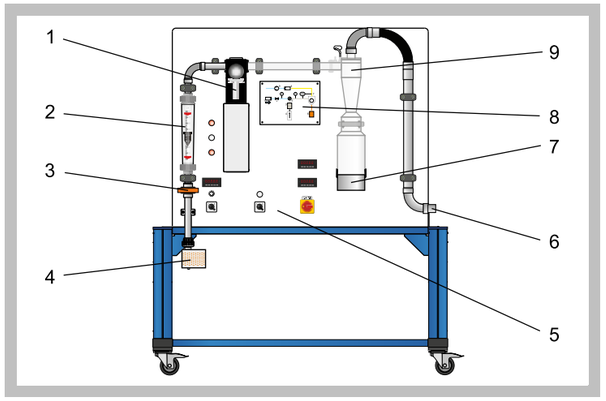

1 disperser with feed material tank and transport unit, 2 flow meter, 3 valve (air flow rate), 4 air inlet with filter, 5 displays and controls, 6 connection for fan, 7 coarse material tank, 8 process schematic, 9 gas cyclone

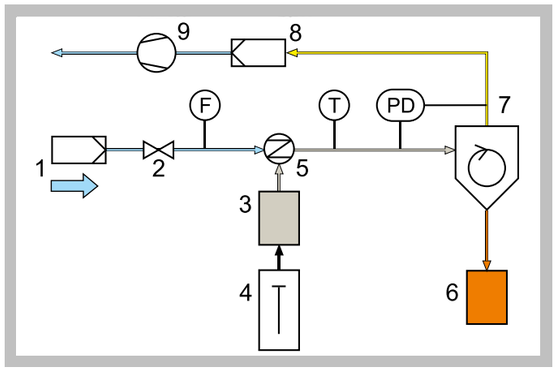

1 air inlet with filter, 2 valve (air flow rate), 3 feed material tank, 4 transport unit, 5 disperser, 6 coarse material tank, 7 gas cyclone, 8 fine material filter, 9 fan; F volumetric flow rate, PD differential pressure, T temperature

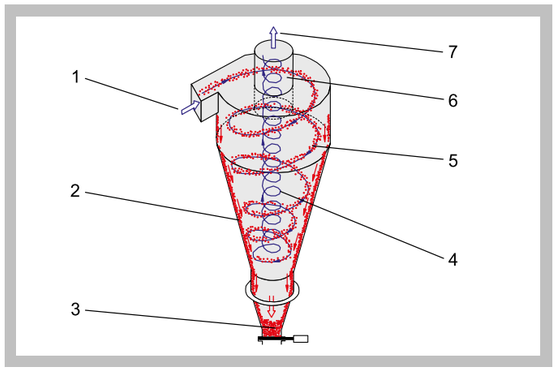

Flow conditions in a gas cyclone: 1 raw gas inlet, 2 separated solid, 3 collected solids, 4 secondary vortex, 5 primary vortex, 6 immersion tube, 7 cleaned gas

Specification

[1] solid separation from gases with a cyclone
[2] cyclone with tangential inlet
[3] metering of feed material into the air flow with a disperser
[4] air flow generation by fan; adjustment by valve
[5] tanks for feed material and coarse material
[6] 1 filter at air inlet and 1 filter for fine material at air outlet
[7] recording of differential pressure, volumetric air flow rate and temperature

Technical Data

Cyclone
- height: approx. 250mm
- diameter: approx. 80mm
- immersion tube diameter: approx. 30mm

Fan
- volumetric flow rate: max. 600m³/h
- power consumption: approx. 3600W

Tanks
- feed material: 15mL
- coarse material: 700mL

Measuring ranges
- cyclone differential pressure: 0...100mbar
- volumetric flow rate (air): 10...100m³/h
- temperature: 0...60°C

Dimensions and Weight

LxWxH: 1520x790x1800mm (trainer)
Weight: approx. 160kg (trainer)
LxWxH: 660x510x880mm (fan)
Weight: approx. 33kg (fan)

Required for Operation

230V, 50Hz, 1 phase

Scope of Delivery

1 trainer
1 fan
1 packing unit of quartz powder (0...0,16mm; 25kg)
1 filling aid for disperser
1 set of instructional material

Order Details

083.23500 CE 235 Gas Cyclone

2E a division of G.U.N.T Gerätebau GmbH, P.O.Box 1125, D-22885 Barsbüttel, t +49 (40)67 08 54-0, f +49 (40)67 08 54-42, E-mail sales@gunt.de
We reserve the right to modify our products without any notifications. Visit our Websites: www.gunt.de | www.gunt2e.de

CE 225 Hydrocyclone

* **Solid separation with a hydrocyclone**
* **Optimum observation of processes through transparent materials**
* **Practical experiments on a laboratory scale**

Technical Description

Hydrocyclones can be used to separate solids suspended in liquids. In CE 225, the suspension is prepared in a tank. A pump delivers the suspension into the tangential inlet of the cyclone. In the cyclone a downward primary vortex is created. The downward taper causes the vortex to reverse. In the middle it moves as a secondary vortex back up towards the immersion tube, where the suspension emerges from the cyclone, having lost the coarse material in it. Inside the cyclone an air core is formed. The centrifugal forces cause the coarser solid particles in the primary vortex to be enriched. They are discharged with the bottom flow at the apex nozzle. It is mainly the fine material that is discharged from the top.

The flow rate in the inlet is adjusted by a valve in a bypass and measured with an electromagnetic flow meter. Sampling points are installed at the bottom and top flow. The flow rates in them can be determined by means of a bucket and a stopwatch. To determine the solid concentration, a balance and a drying chamber are recommended. Using a suitable analysis device (such as a diffraction spectrometer), a separation function can be produced and the separation size determined. Quartz powder and diatomite are recommended for use as the solid.

The trainer was developed in cooperation with the **Department of Mechanical Process Engineering at Anhalt University of Applied Sciences**.

The well-structured instructional material sets out the fundamentals and provides a step-by-step guide through the experiments.

Learning Objectives / Experiments

- fundamental principle and the method of operation of a hydrocyclone
- solid mass flow rate in feed, top and bottom flow
- liquid mass flow rate in feed, top and bottom flow
- characteristic values for sharpness of separation
- pressure loss at the cyclone dependent on the feed flow rate
- influence of solids density on characteristic values and pressure loss

CE 225 Hydrocyclone

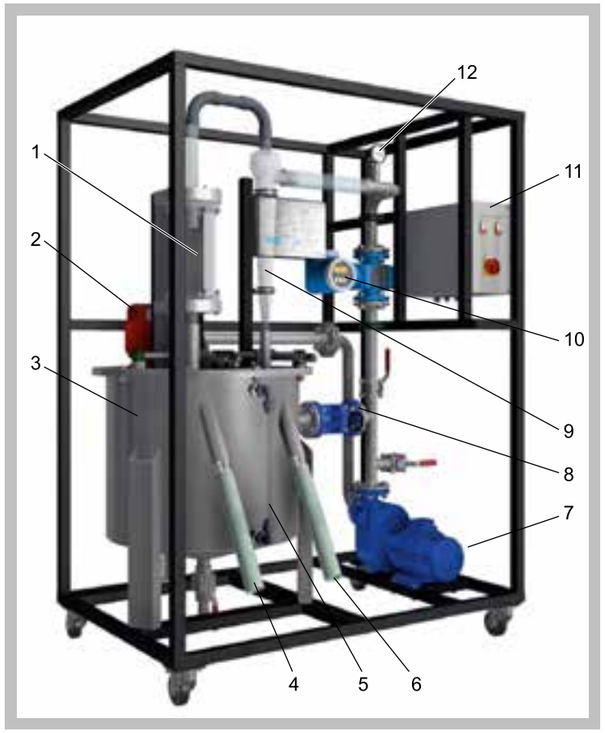

1 tank for observation of top flow, 2 stirring machine, 3 stirred tank, 4 top flow sampling point, 5 level indicator, 6 bottom flow sampling point, 7 pump, 8 valve in bypass, 9 hydrocyclone, 10 flow meter, 11 switch box, 12 manometer

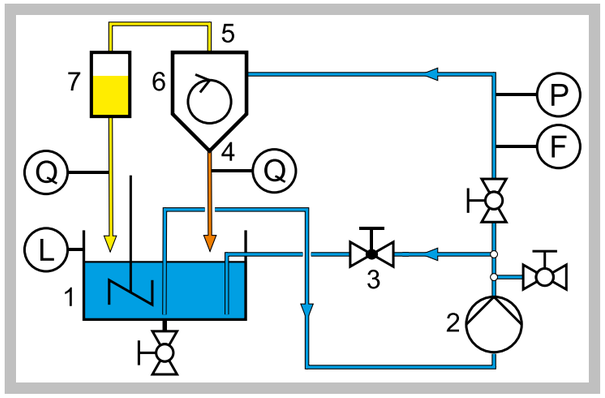

1 stirred tank, 2 pump, 3 valve in bypass, 4 bottom flow, 5 top flow, 6 hydrocyclone, 7 tank for observation of top flow;
F flow meter, P manometer, L level indicator, Q sampling point

Specification

[1] solid separation from liquids with a hydrocyclone
[2] hydrocyclone with tangential inlet
[3] stirred tank for preparation of suspensions
[4] centrifugal pump to deliver the suspension
[5] adjustment of flow rate by valve in bypass
[6] electromagnetic flow meter at inlet
[7] sampling points on the top and bottom flow to determine the flow rates and solid concentrations
[8] manometer to determine the pressure loss at the cyclone

Technical Data

Cyclone
- height: 710mm
- diameter: 114mm
- immersion tube diameter: 40mm

Stirred tank
- capacity: 200L
- material: stainless steel

Top flow tank
- capacity: 5L
- material: PMMA

Pump
- max. flow rate: 400L/min
- max. head: 30m

Measuring ranges
- pressure: 0...4bar
- flow rate: 0...200L/min

Dimensions and Weight

LxWxH: 1500x1000x2050mm
Weight: approx. 390kg

Required for Operation

230V, 60Hz, 3 phases or 400V, 50/60Hz, 3 phases

Scope of Delivery

1 trainer
7 apex nozzles
1 hose
2 buckets
1 measuring cup
1 shovel
1 stopwatch
1 set of tools
25kg quartz powder
20kg diatomite
1 set of instructional material

Order Details

083.22500 CE 225 Hydrocyclone

2E a division of G.U.N.T Gerätebau GmbH, P.O.Box 1125, D-22885 Barsbüttel, t +49 (40)67 08 54-0, f +49 (40)67 08 54-42, E-mail sales@gunt.de
We reserve the right to modify our products without any notifications. **Visit our Websites: www.gunt.de | www.gunt2e.de**

BASIC KNOWLEDGE

FILTRATION

During filtration, solid particles are separated off by a filter medium from a flowing suspension. Suspensions contain insoluble solids finely distributed in a liquid. Usable filter media are sieves, cloths, papers or bulk solids.

The filter medium must be as permeable to the liquid and as impermeable to the solid material as possible. The largely solid-free liquid emerging from the filter is termed the filtrate.

A fundamental distinction is made between depth filtration and cake filtration:

In **depth filtration,** the solid particles are separated inside a filter medium layer. The filter medium layer may be composed of larger grains (bulk) or of fibres. The solid particles are smaller than the pore width of the filter medium. They penetrate through the pores into the filter medium, where they are captured. Over time, the pores become more and more filled with the separated solid. This increasing loading of the filter is identifiable by a rising pressure loss. When a certain maximum pressure loss has been reached and the capacity of the filter exhausted, the filter medium layer must be replaced or cleaned. Cleaning is usually carried out by way of back-flushing. Depth filtration is used mainly in water treatment, but also in the clarification of other liquids, such as beverages.

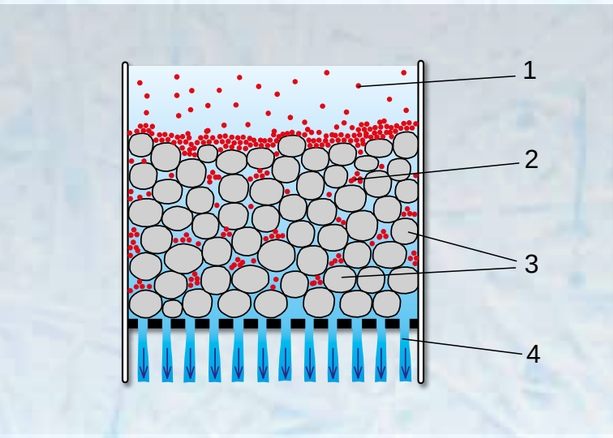

Depth filtration:
***1** particles in suspension inlet, **2** separated particles*
***3** filter medium layer, **4** filtrate*

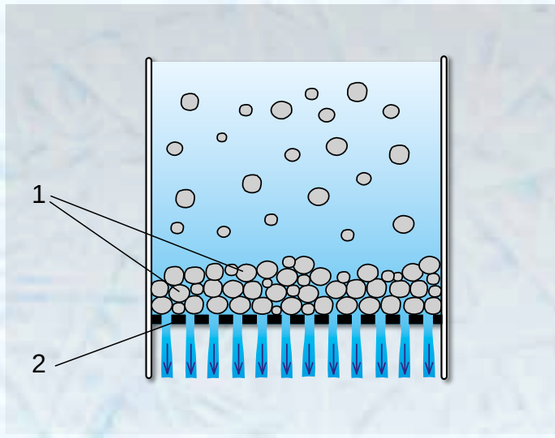

Cake filtration:
***1** filter cake made of separated particles*
***2** filter medium (sieve)*

In **cake filtration,** only one filter medium (sieve, cloth, filter paper) is present at the start of filtration. The pore width of the filter medium is less than the particle size of the solid. A growing filter cake made up of the separated particles thus forms over time on the filter medium. As a result, the pressure loss also increases and the flow rate decreases. For this reason the filter cake must be removed after a certain time. A distinction can be made between discontinuous and continuous filtration. In discontinuous filtration apparatus, such as Nutsche Filters, the filtration process must be interrupted in order to remove the filter cake. An example of a continuous filter is the drum cell filter. It permits the filter cake to be removed while filtration is in progress. The desired product of a filtration may be the filtrate or the filter cake. Often the filter cake is rinsed and dried following filtering.

CE 116 *Cake and Depth Filtration*

*** Cake and depth filtration with different suspensions and filter medium layers**

Technical Description

With CE 116 the processes in depth filtration and cake filtration can be observed and investigated. The suspension (water and diatomite as the solid) flows from the hopper into the top of the filter element, where the solids are separated off. The filtrate flows through a flow meter into the drain. The filter element has a porous filter medium at the bottom. In cake filtration, the filter medium provides the foundation for build-up of the filter cake. In depth filtration, the filter medium supports the bulk solids (filter medium layer; gravel). Twin tube manometers measure the pressure loss over the filter element.

The well-structured instructional material sets out the fundamentals and provides a step-by-step guide through the experiments.

Learning Objectives / Experiments

- fundamentals of filtration: Darcy's equation
- depth filtration with different bulk solids and suspensions
- cake filtration with different suspensions
- identification of characteristic filtration values

Specification

[1] fundamentals of cake and depth filtration
[2] filter element with sintered filter medium on its bottom to capture the particles
[3] pressure loss measurement with twin tube manometers
[4] height-adjustable filler hopper made of DURAN glass
[5] flow meter with needle valve for adjustment

Technical Data

Filter element
- filter chamber height: 85mm
- inside diameter: approx. 37mm
- cross-sectional area: approx. 11cm²
- tube material: DURAN glass

Filter medium, sintered filter SIKA 100
- pore size: 100µm
- thickness: 2mm
- material: sintered metal

Measuring ranges
- flow rate: 40...360mL/min
- pressure: 2x 0...500mmWC
- temperature: -10...100°C
- measuring cups
  1x 1000mL, scale division: 10mL
  1x 100mL, scale division: 2mL

Dimensions and Weight

LxWxH: 450x410x1040mm
Weight: approx. 30kg

Required for Operation

Drain recommended,
balance to register the filtrate quantity

Scope of Delivery

1 experimental unit
2 measuring cups
1 stopwatch
1 thermometer
1kg sand (1...2mm)
2kg diatomite
1 set of instructional material

Order Details

083.11600 CE 116 Cake and Depth Filtration

G.U.N.T Gerätebau GmbH, Hanskampring 15-17, D-22885 Barsbüttel, Phone +49 (40) 67 08 54-0, Fax +49 (40) 67 08 54-42, E-mail sales@gunt.de, Web http://www.gunt.de
We reserve the right to modify our products without any notifications.

CE 117 *Flow through Particle Layers*

*** Experiments in the fundamentals of fluid mechanics on particle layers**

*** Flow through fixed beds**

*** Flow through fluidised beds**

*** Pressure loss in fixed beds and fluidised beds**

Technical Description

Flow through particle layers is widely encountered in process engineering. In reactors, fixed and fluidised beds are subjected to through-flow by liquids and gases. The separation of solids from suspensions by cake and depth filtration is another area of application.

With CE 117 the fluid mechanic principles involved in flow through fixed beds and fluidised beds can be investigated. For the purpose, a fillable test tank made of glass is provided, through which water can be made to flow from both ends. A sintered-metal plate serves as the base for bulk solids.

Water from the laboratory water connection flows into the test tank. To investigate flow through fixed beds, the water enters the test tank from the top. It flows through the fixed bed and the sintered-metal plate and passes by way of a distributor to the outlet.

The experimental set-up can be modified by means of quick-release couplings. This also enables the flow through the test tank to be reversed and fluidised beds to be investigated. The water flows upwards through the porous sintered-metal plate and the fixed bed. If the velocity of the water is less than the so-called fluidisation velocity, the flow merely passes through the fixed bed. At higher velocities a fluidised bed is formed. The water flows from the head of the test tank into an expansion tank. From there it flows into the outlet.

Regardless of the specific set-up, the flow rate is adjusted by a valve and indicated by a flow meter. To determine the pressure loss via the fixed bed or fluidised bed, two manometers with differing measuring ranges are provided. The desired manometer is selected by way of valves.

The well-structured instructional material sets out the fundamentals and provides a step-by-step guide through the experiments.

Learning Objectives / Experiments

- learning the fundamentals of flow through fixed beds and fluidised beds (Darcy)
- observation of the fluidisation process
- pressure loss dependent on the flow rate, type, particle size and height of the bulk solid
- determination of the fluidisation velocity and comparison with theoretically calculated values
- verification of Carman-Kozeny equation

CE 117 *Flow through Particle Layers*

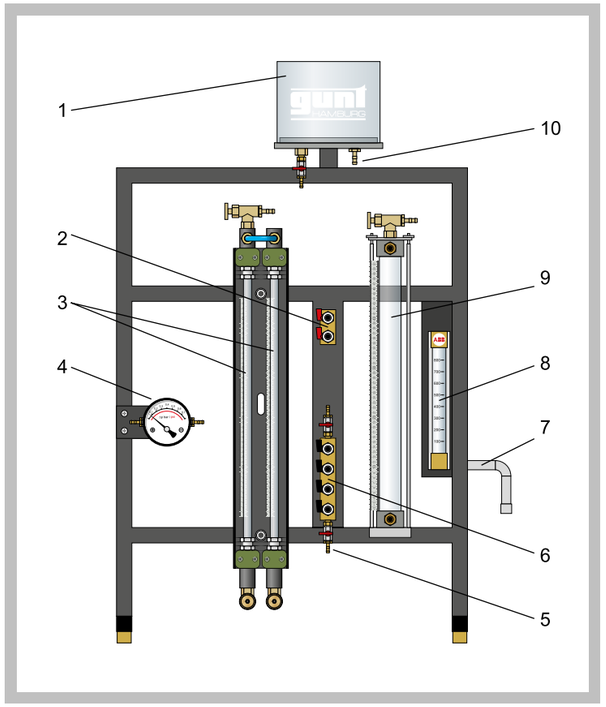

1 expansion tank, 2 inlet distributor, 3 tube manometer, 4 manometer, 5 outlet, 6 distributor for pressure measurement, 7 inlet, 8 flow meter, 9 test tank, 10 outlet

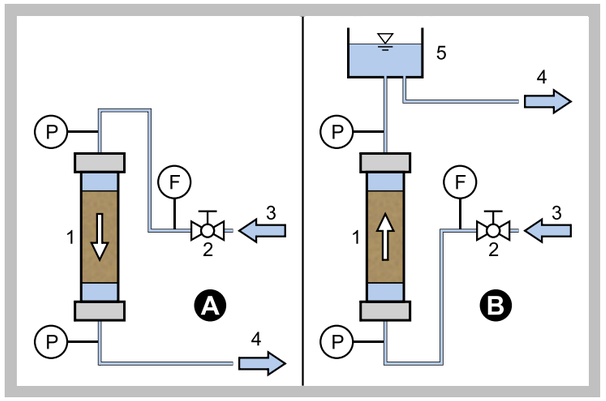

Process schematic for the investigation of fixed beds (A) res. fluidised beds (B): 1 test tank (particle layer), 2 valve (flow rate), 3 inlet, 4 outlet, 5 expansion tank; P pressure, F flow rate

Specification

[1] investigation of the properties of fixed and fluidised beds subjected to liquid flow
[2] glass test tank with sintered filter medium on its base
[3] test tank removable for filling
[4] downward flow to investigate fixed beds
[5] upward flow to investigate fluidised beds
[6] flow meter with valve for adjustment
[7] 2 manometers with differing measuring ranges to measure pressure loss through the test tank
[8] steel rule to measure the height of the fixed or fluidised bed

Technical Data

Test tanks
- length: 510mm
- inside diameter: approx. 37mm
- material: DURAN glass

Filter medium
- thickness: 2mm
- material: sintered metal

Expansion tank
- capacity: approx. 4500mL
- material: PVC

Measuring ranges
- flow rate: 60...820mL/min
- tube manometers: 2x 0...500mmWC
- manometer: 0...250mbar
- steel rule: 10...500mm

Dimensions and Weight

LxWxH: 690x410x1150mm
Weight: approx. 26kg

Required for Operation

Water connection: approx. 1L/min
Drain recommended

Scope of Delivery

1 experimental unit
0,5kg sand (1...2mm)
0,5kg glass-shot beads (180...300µm)
1,0kg glass-shot beads (420...590µm)
1 set of instructional material

Order Details

083.11700 CE 117 Flow through Particle Layers

G.U.N.T Gerätebau GmbH, Hanskampring 15-17, D-22885 Barsbüttel, Phone +49 (40) 67 08 54-0, Fax +49 (40) 67 08 54-42, E-mail sales@gunt.de, Web http://www.gunt.de
We reserve the right to modify our products without any notifications.

CE 287 Plate and Frame Filter Press

*** Separation of solids from suspensions with a plate and frame filter press**

*** Discontinuous cake filtration**

*** Practical experiments on a laboratory scale**

Technical Description

Plate and frame filter presses are used in the beverage industry, for example, to clarify intermediate products.

A suspension of diatomite and water (recommended) is prepared in a tank. A pump ensures that the solid remains suspended and does not settle. The pump delivers the suspension into the individual separating chambers of the plate and frame filter press. A separating chamber is formed by one filter frame and two filter plates. The filter plates are grooved and covered over with filter cloths. The filtrate passes through the filter cloth and flows via the grooves in the plates into a collecting pipe. The filtrate exits the plate and frame filter press through the collecting pipe and is collected in the filtrate tank. The solid material is separated off at the filter cloth, where it forms a growing filter cake. As the filter cake becomes thicker, its flow resistance also increases. When the separating chamber is full, or a maximum pressure difference has been reached, the filtration process is ended. The plates and frames of the plate and frame filter press are pulled apart. The filter cake can be removed. For the next filtration the plates and frames must be pushed back together. A spindle is used to press them together. The press forces ensure that the suspension does not leak from the contact points between the plates and the frames, but is forced through the filter cloth.

The flow rate through the plate and frame filter press is adjusted by a valve. The pressure occurring during filtration is indicated on a manometer. The filtrate tank is scaled. This means a stopwatch can be used to measure the flow rate. An included opacimeter allows the solid concentration of the filtrate to be determined. A drying chamber is recommended for evaluation of the experiments.

The well-structured instructional material sets out the fundamentals and provides a step-by-step guide through the experiments.

Learning Objectives / Experiments

- learning the fundamental principle and method of operation of a plate and frame filter press
- production of a suspension
- removal of the filter cake
- insertion of the filter cloth
- fundamentals of cake filtration: Darcy's equation
- variation in time of filtrate quantity and solid concentration in filtrate
- mass of filter cake dependent on filtrate quantity

CE 287 Plate and Frame Filter Press

1 switch box with controls, 2 suspension tank, 3 filtrate tank outlet and overflow, 4 filtrate tank, 5 spindle, 6 plate and frame filter press

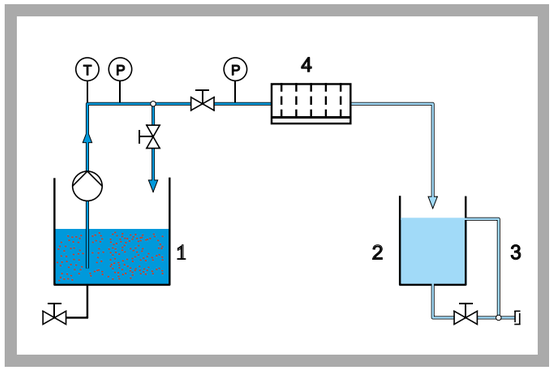

1 tank with pump, 2 filtrate tank, 3 overflow, 4 plate and frame filter press; T temperature, P pressure

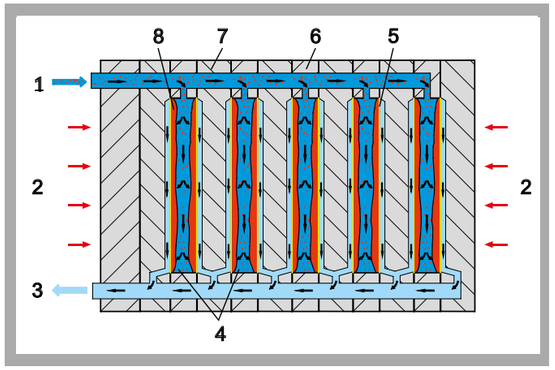

Fundamental principle of a plate and frame filter press: 1 suspension inlet, 2 press forces, 3 filtrate outlet, 4 separating chambers, 5 filter cloth, 6 filter frame, 7 filter plate, 8 filter cake

Specification

[1] plate and frame filter press for discontinuous cake filtration
[2] HDPE tank to produce a suspension
[3] centrifugal pump to deliver the suspension to the plate and frame filter press
[4] plate and frame filter press with 10 opening separating chambers for removal of the filter cake
[5] PMMA tank with level scale for filtrate
[6] adjustment of suspension flow rate by valve
[7] thermometer and manometer in inlet
[8] portable opacimeter to measure the solid concentration in the filtrate

Technical Data

Plate and frame filter press
- filter area: approx. 0,72m²
- working pressure: approx. 0,4...2,5bar

Centrifugal pump (submersible pump)
- max. flow rate: 4,5m³/h
- max. head: 45m

Tanks
- suspension tank: 200L
- filtrate: 20L

Measuring ranges
- pressure: 0...4bar
- temperature: 0...60°C

Dimensions and Weight

LxWxH: 1900x790x1900mm
Weight: approx. 190kg

Required for Operation

230V, 50/60Hz, 1 phase or 120V, 60Hz/CSA, 1 phase
Water connection

Scope of Delivery

1 trainer
1 portable opacimeter
1 stopwatch
1 set of filter cloths
2 hoses
20kg diatomite
1 set of dust masks
1 set of instructional material

Order Details

083.28700 CE 287 Plate and Frame Filter Press

G.U.N.T Gerätebau GmbH, Hanskampring 15-17, D-22885 Barsbüttel, Phone +49 (40) 67 08 54-0, Fax +49 (40) 67 08 54-42, E-mail sales@gunt.de, Web http://www.gunt.de
We reserve the right to modify our products without any notifications.

CE 283 *Drum Cell Filter*

*** Separation of solids from suspensions with a drum cell filter**

*** Continuous removal of filter cake**

*** Practical experiments on a laboratory scale**

Technical Description

Drum cell filters can be used to separate solids continuously from suspensions.

The suspension unit CE 285 produces a suspension of diatomite and water. A pump conveys the suspension into the suspension tank of the drum cell filter. A stirrer keeps the solid particles in the suspension suspended. Part of the rotating drum dips into the suspension. The jacket of the drum is perforated and covered over with a filter cloth. The drum is divided into cells. Each cell is joined by a hollow shaft to a vacuum line. The vacuum sucks filtrate through the filter cloth into the drum. From there it is carried in a collector tank which is under vacuum. The solid is separated off at the filter cloth. Consequently, a filter cake which steadily grows in the direction of rotation is created on the immersed part of the drum. When the filter cake is drawn out of the suspension by the rotating motion, it is drained of water by the applied vacuum. A scraper scrapes the filter cake off of the drum before the drum dips back into the suspension. Compressed air can also be used to remove the filter cake. The filter cake drops into a collector tank.

The flow rate of the supplied suspension is adjusted on the suspension unit. The level in the suspension tank of the drum cell filter can be adjusted by way of an adjustable overflow. The applied negative pressure is indicated by a manometer on the vacuum tank. The rotation speed of the drum is infinitely variable.

Compressed air and vacuum connections are required to operate the trainer.

The well-structured instructional material sets out the fundamentals and provides a step-by-step guide through the experiments.

Learning Objectives / Experiments

- learning the basic principle and method of operation of a drum cell filter
- fundamentals of cake filtration: Darcy's equation
- variation in time of filtrate quantity, filter cake mass and thickness
- filter cake mass and thickness dependent on filtrate quantity, negative pressure and drum speed

CE 283 *Drum Cell Filter*

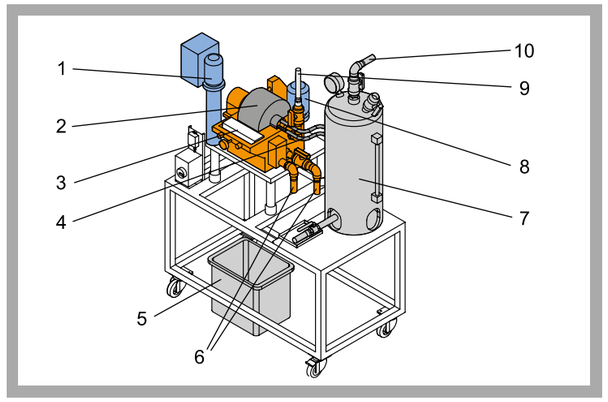

1 motor (drum), 2 drum, 3 scraper, 4 filtrate vacuum lines, 5 filter cake collector tank, 6 suspension tank overflow and outlet, 7 filtrate vacuum tank, 8 motor (stirrer), 9 suspension inlet, 10 vacuum connection

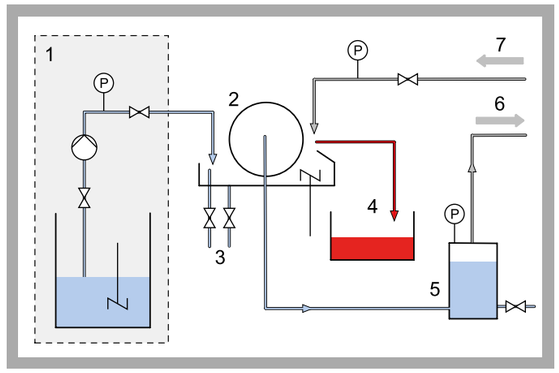

1 suspension unit (CE 285), 2 drum cell filter, 3 suspension tank overflow and outlet, 4 filter cake collector tank, 5 filtrate vacuum tank, 6 vacuum connection, 7 compressed air connection with pressure limiter; P manometer

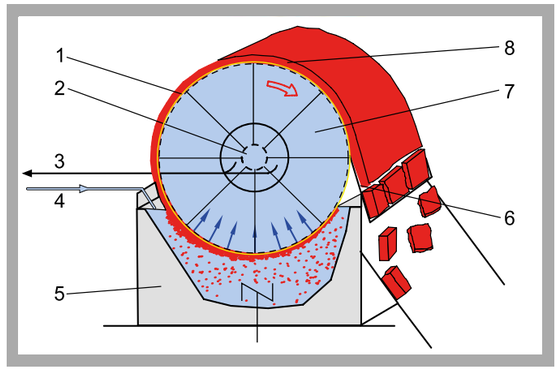

Fundamental principle of a drum cell filter: 1 perforated drum with filter cloth, 2 hollow shaft, 3 vacuum (filtrate), 4 suspension inlet, 5 suspension tank, 6 filter cake removal, 7 cell, 8 filter cake

Specification

[1] continuous cake filtration of suspensions with a drum cell filter
[2] rotating perforated drum, partially immersed in suspension, with filter cloth
[3] vacuum inside drum to draw off filtrate and dry filter cake
[4] continuous removal of filter cake with adjustable scraper or compressed air
[5] drum speed infinitely variable
[6] plastic vacuum tank to collect filtrate
[7] suspension tank with stirrer and overflow
[8] plastic collector tank for filter cake
[9] production and transport of suspension with suspension unit CE 285

Technical Data

Drum
- filter area: approx. 0,1m²
- speed: approx. 0,1...3min^{-1}
- motor power consumption: approx. 300W

Stirrer
- speed: approx. 15min^{-1}
- motor power consumption: approx. 120W

Tanks
- filtrate vacuum tank: approx. 30L
- filter cake collector tank: approx. 30L
- suspension: approx. 3L

Measuring ranges
- vacuum tank pressure: -1...0bar
- cake remover compressed air: 0...2bar

Dimensions and Weight

LxWxH: 1400x800x1800mm
Weight: approx. 100kg

Required for Operation

230V, 60Hz/CSA, 3 phases or 400V, 50Hz, 3 phases
Vacuum and compressed air connections required
Water connection recommended

Scope of Delivery

1 drum cell filter
1 collector tanks
1 set of hoses
1 set of filter cloths
1 set of instructional material

Order Details

083.28300 CE 283 Drum Cell Filter

CE 284 *Nutsche Vacuum Filter*

*** Cake filtration with a Nutsche vacuum filter**

Technical Description

Nutsche filters are used for discontinuous cake filtration of suspensions with high solid concentrations. The suspension production unit CE 285 produces a suspension of diatomite and water and delivers it from above into the Nutsche filter. A filter bag is inserted in the Nutsche filter. A growing filter cake accumulates in the filter bag made from the separated solid material. The vacuum in the bottom section of the Nutsche filter draws filtrate through the filter cake and the filter bag. It is collected in the bottom section. After filtering, the filter cake obtained is washed with a washing liquid (water) and is dried by the applied vacuum before being removed.

The well-structured instructional material sets out the fundamentals and provides a step-by-step guide through the experiments.

Learning Objectives / Experiments

- basic principle and method of operation of a Nutsche vacuum filter
- fundamentals of cake filtration: Darcy's equation
- mass and thickness of filter cake dependent on filtrate quantity

Specification

[1] Nutsche vacuum filter for discontinuous cake filtration
[2] open 2-part vessel with flange and recessed sieve base
[3] bottom section to draw in and collect filtrate
[4] top section with inserted filter bag to form filter cake
[5] polyester filter bag
[6] manometer to indicate negative pressure in bottom section
[7] 2 sight glasses to observe level in bottom section
[8] production and transport of suspension with suspension production unit CE 285

Technical Data

Vessel
- inside diameter: approx. 300mm
- capacity: approx. 55L
- permissible pressure: -1bar
- permissible temperature: -10...100°C
- material: stainless steel

Manometer
- measuring range: -1...0bar
- diameter: 160mm

Dimensions and Weight

LxWxH: 600x900x1900mm
Weight: approx. 100kg

Required for Operation

Vacuum and water connections required

Scope of Delivery

1 Nutsche vacuum filter
1 filter bag
1 set of instructional material

Order Details

083.28400 CE 284 Nutsche Vacuum Filter

CE 286 *Nutsche Pressure Filter*

*** Cake filtration with a Nutsche pressure filter**

Technical Description

Nutsche filters are used for discontinuous cake filtration of suspensions with high solid concentrations. The suspension production unit CE 285 produces a suspension of diatomite and water and delivers it from above into the Nutsche filter. In the bottom flange of the Nutsche filter is a recessed sieve base with a filter cloth. A growing filter cake accumulates on the filter cloth made from the separated solid material. The applied positive pressure in the top section of the Nutsche filter pushes the filtrate through the filter cake and the filter cloth. It is collected in the bottom section of the tank. After filtering, the filter cake obtained is washed with a washing liquid (water) and is then dried by an air flow.

Learning Objectives / Experiments

- basic principle and method of operation of a Nutsche pressure filter
- fundamentals of cake filtration: Darcy's equation
- mass and thickness of filter cake dependent on filtrate quantity

Specification

[1] Nutsche pressure filter for discontinuous cake filtration
[2] enclosed 3-part vessel with 2 flanges and 2 bumped bases
[3] bottom flange with recessed sieve base and PP filter cloth
[4] bottom section of vessel to collect filtrate
[5] centre section to form filter cake
[6] top section removable to remove filter cake
[7] maintenance and pressure control unit to adjust positive pressure in centre and top section
[8] 2 manometers to indicate pressure upstream and downstream of filter
[9] 2 sight glasses to observe level in bottom section
[10] production and transport of suspension with suspension production unit CE 285

Technical Data

Vessel
- inside diameter: approx. 300mm
- capacity: approx. 75L
- permissible pressure: -1...10bar
- permissible temperature: -10...100°C
- material: stainless steel

Measuring ranges
- 2x manometers (D=160mm): 0...4bar
- 1x maintenance and pressure control unit: 0,5...8,5bar

Dimensions and Weight

LxWxH: 600x900x1900mm
Weight: approx. 120kg

Required for Operation

Compressed air and water connections required

Scope of Delivery

1 Nutsche pressure filter
1 filter cloth
1 set of instructional material

Order Details

083.28600 CE 286 Nutsche Pressure Filter

CE 285 Suspension Production Unit

*** Supply unit for experimental filtration units CE 283, CE 284, CE 286**

Technical Description

CE 285 provides the experimental filtration units with a suspension of diatomite and water (recommended). It is prepared in the stirred tank. The stirrer ensures that the solid remains suspended and does not settle. An eccentric screw pump delivers the suspension to the connected experimental unit. The pump rotor is made of stainless steel. It runs inside an elastomer housing. A manometer indicates the delivery pressure. A pressure cut-out switch stops the pump if the pressure is too high. A temperature transducer protects the pump from running dry. The speed of the pump can be adjusted on a potentiometer. The stirred tank features a level indicator and three flow impeders. All necessary connecting elements are supplied to connect the supply unit to the relevant experimental filtration unit.

Scope of Delivery

1 suspension production unit
1 packing unit of diatomite
1 set of hoses
1 set of instructional material

Specification

[1] supply unit to produce and deliver suspensions for experimental filtration units
[2] stirred tank with lid and stirring machine to prepare a suspension
[3] eccentric screw pump, with pressure cut-out switch, dry-running protection and adjustable speed, to deliver the suspension

Technical Data

Tank: 200L, stainless steel
Stirring machine
- power consumption: 180W
- speed: 1000min^{-1} (constant)
Pump
- max. head: 50m
- max. flow rate: approx. 230L/h
Manometer measuring range: 0...10bar

Dimensions and Weight

LxWxH: 1850x850x1450mm
Weight: approx. 220kg

Required for Operation

400V, 50Hz, 3 phases or 230V, 60Hz/CSA, 3 phases

Order Details

083.28500 CE 285 Suspension Production Unit

G.U.N.T Gerätebau GmbH, Hanskampring 15-17, D-22885 Barsbüttel, Phone +49 (40) 67 08 54-0, Fax +49 (40) 67 08 54-42, E-mail sales@gunt.de, Web http://www.gunt.de
We reserve the right to modify our products without any notifications.

CE 579 DEPTH FILTRATION

The ideal way to teach and learn about depth filtration in all its aspects

- filtration and backwash
- comprehensive range of instrumentation
- manometer panel to measure the pressures in the filter bed
- state-of-the-art software with control functions and data acquisition

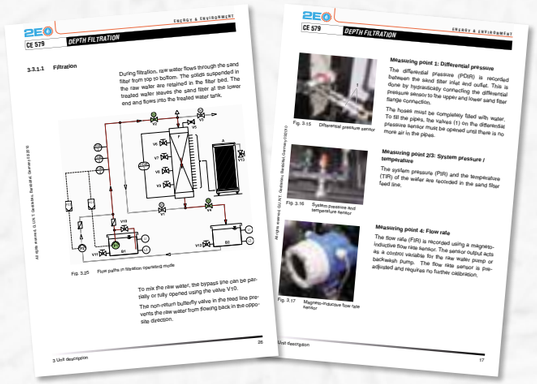

The well-structured instructional material is delivered as paper printouts in a folder and additionally as PDF files on a CD.

Use of high quality components: Magneto-inductive flow rate sensor, backwash pump and ball valves with electric drive

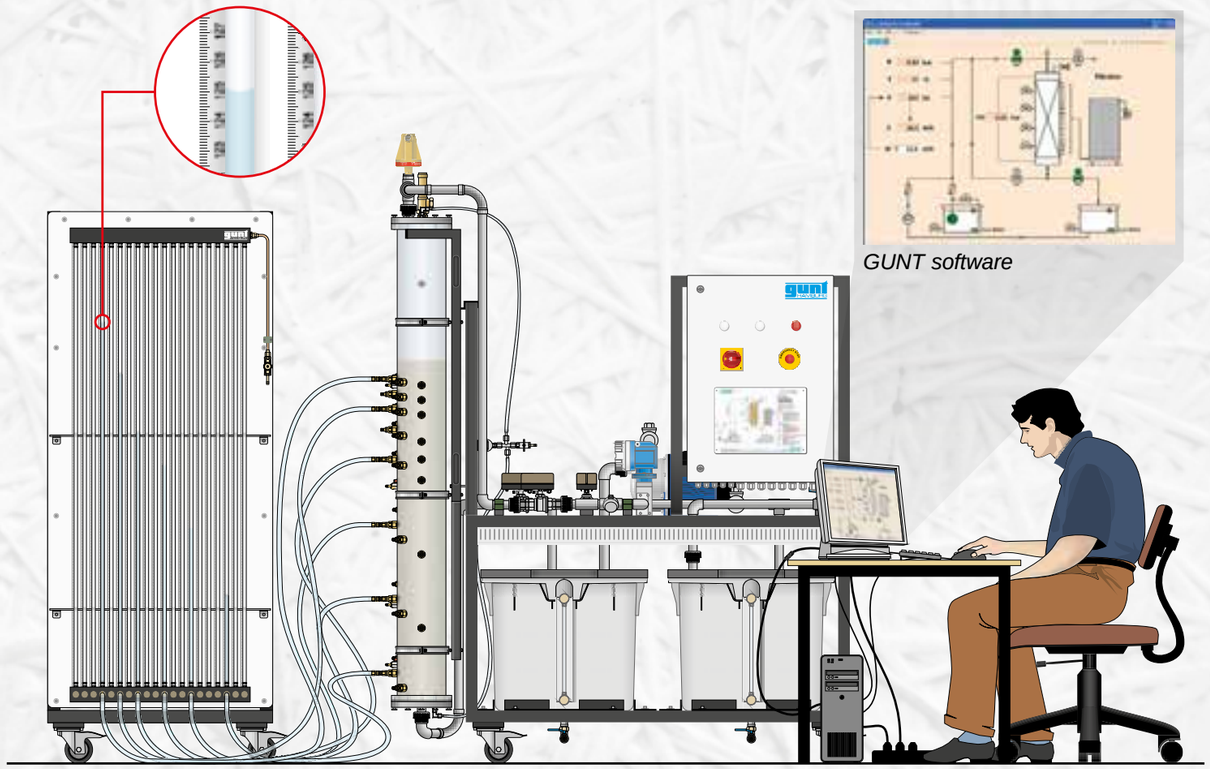

GUNT software

Manometer panel *Trainer*

CE 579 Depth Filtration

The illustration shows: manometer panel (left) and trainer (right)

*** Removal of solids by depth filtration (sand filter)**

*** Pressure loss: plotting of Micheau diagrams**

*** Backwash of sand filters**

Technical Description

Depth filtration with sand filters is a key unit operation in water treatment. CE 579 enables this process to be demonstrated.

Raw water contaminated with solids is pumped from above into a sand filter. The solids are captured and retained as the raw water flows through the filter bed. The water itself passes through the filter bed and emerges at the bottom end of the sand filter. The treated water (filtrate) flows into a tank. Over time, more and more solids are deposited in the filter bed which increases its flow resistance. This process is detectable by the increasing pressure loss between the sand filter inlet and outlet. The flow through the sand filter decreases. Backwashing with treated water cleans the filter bed and reduces the pressure loss again.

The sand filter is equipped with a differential pressure gauge. There are also several pressure measuring points along the filter bed. The pressures are transmitted to tube manometers via hoses and displayed there as water columns. This can be used to plot Micheau diagrams. The flow rate, temperature, differential pressure and system pressure are measured. The flow velocity in the filter bed (filter velocity) can be adjusted. Samples can be taken at all relevant points.

A software program is provided to control the operating states and measure data. A process schematic shows the current operating states of the individual components and the measured data. E.g. diatomite can be used to produce the raw water.

The well-structured instructional material sets out the fundamentals and provides a step-by-step guide through the experiments.

Learning Objectives / Experiments

- learning the fundamental principle of depth filtration by sand filters
- observation of the pressure conditions in a filter bed
- determination of pressure losses
- plotting of Micheau diagrams
- principle of backwash

CE 579 Depth Filtration

1 treated water tank, 2 raw water tank, 3 raw water pump, 4 switch cabinet, 5 bachwash pump, 6 electromagnetic flow rate sensor, 7 temperature sensor, 8 ball valves with electric drive, 9 bleed valve, 10 sand filter

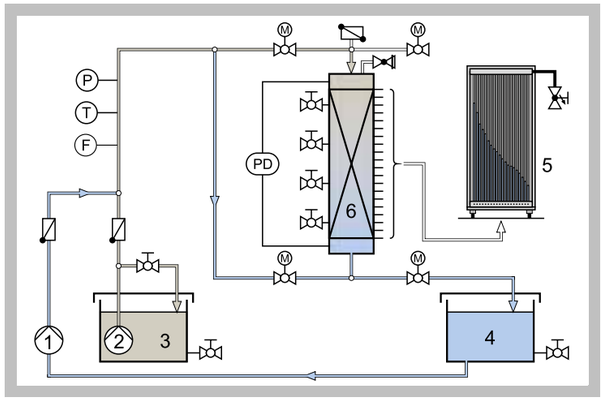

1 backwash pump, 2 raw water pump, 3 raw water, 4 treated water (filtrate), 5 manometer panel, 6 sand filter; F flow rate, P system pressure, PD differential pressure, T temperature

Specification

[1] depth filtration with sand filter
[2] sand filter backwash possible
[3] 20 tube manometers to measure the pressures in the filter bed
[4] plotting of Micheau diagrams
[5] raw water and backwash pump
[6] electromagnetic flow rate sensor
[7] 4 ball valves with electric drive
[8] measurement of flow rate, differential pressure, system pressure and temperature
[9] filter velocity adjustable
[10] GUNT software with control functions and data acquisition via USB under Windows Vista or Windows 7

Technical Data

Sand filter
- outer diameter: 200mm
- inside diameter: 150mm
- height: 1660mm

Raw water pump
- max. flow rate: 13m³/h
- max. head: 10m

Backwash pump
- max. flow rate: 3m³/h
- max. head: 37m

Tanks for raw water and treated water
- capacity: each 180L

Measuring ranges
- flow rate: 0...1300L/h
- tube manometers: 20x 0...1500mmWC
- differential pressure: -1...1bar
- system pressure: 0...4bar
- temperature: 0...100°C
- filter velocity: 0...70m/h

Dimensions and Weight

LxWxH: 1590x900x2190mm (trainer)
LxWxH: 750x640x1900mm (manometer panel)
Total weight: approx. 250kg

Required for Operation

230V, 50/60Hz, 1 phase or 230V, 60Hz/CSA, 3 phases
Water connection, drainage

Scope of Delivery

1 trainer
1 manometer panel
1 set of hoses
1 packing unit of gravel
1 packing unit of diatomite
1 GUNT software CD + USB cable
1 set of instructional material

Order Details

083.57900 CE 579 Depth Filtration

2E a division of G.U.N.T Gerätebau GmbH, P.O.Box 1125, D-22885 Barsbüttel, t +49 (40)67 08 54-0, f +49 (40)67 08 54-42, E-mail sales@gunt.de
We reserve the right to modify our products without any notifications. Visit our Websites: www.gunt.de | www.gunt2e.de

BASIC KNOWLEDGE

COMMINUTION

Comminution alters the particle size and shape and the surfaces of solids. Virtually all solids must be comminuted when being mined or processed.

The comminution of solids can be used for a variety of purposes:

■ **Creating intermediate or end products with specific particle sizes**
For many processes applied to solids, specific particle sizes are required in order to create a desired product. For example, thermoplastic input products must be delivered in the form of pellets of a specific size. That is the form in which they can best be melted and formed.

■ **Enlargement of the surface**
Chemical reactions take place more rapidly when the surface areas of the reacting materials are larger. For example, fine milled coal dust burns explosively, while large pieces of coal burn slowly. Likewise, salts are dissolved more quickly in liquids the smaller their particle size.

■ **Recovery of usable materials from solid compounds**
Waste materials, mineral and plant raw materials consist of different components. In order to expose the usable materials for further processing, the raw materials must be comminuted. The comminution process is often followed by a sorting process to separate out the usable material. A key example is the recovery of iron ores from rock compounds.

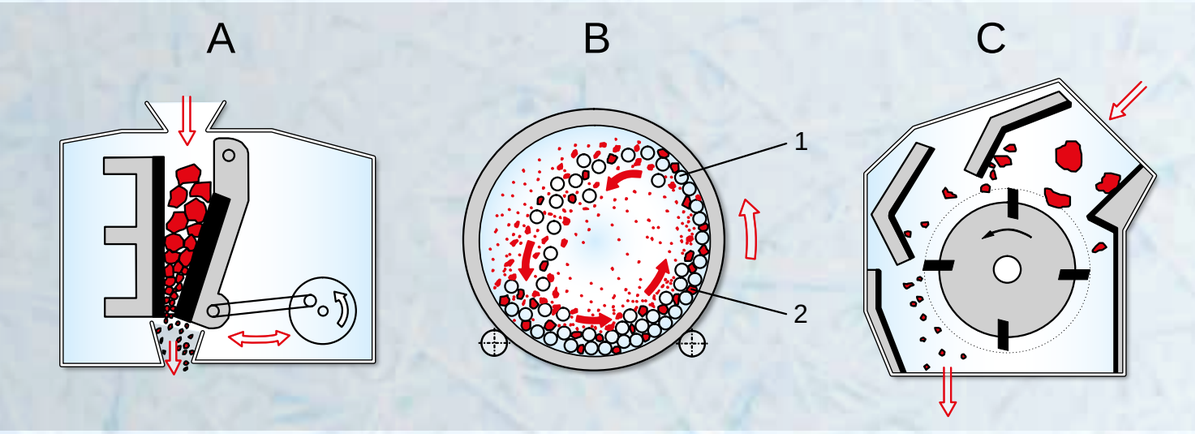

Examples of comminution machines:
***A** jaw crusher, **B** ball mill, **C** impact crusher, **1** milling balls, **2** material to be milled*

The result of a comminution depends primarily on the method of stress loading applied. In most comminution machines stress is applied between two solid surfaces or by impact:

■ **Stress between solid surfaces**
The particles are between two surfaces which are moving relative to each other. In the process, the particles are subjected to stress, such as by pressure, shearing, shock impact or cutting. This type of stress loading occurs in the case of jaw crushers and roller or ball mills for example.

■ **Impact stress**
The particles either impact at high speed against a fixed wall or a tool moves against a free-flying particle. The comminution can also occur when two particles collide.

Typical comminution machines in which the particles are subjected to impact stress are impact crushers and hammer crushers.

CE 245 *Ball Mill*

*** Comminution with a ball mill**
*** Observation of the milling process**

Technical Description

Ball mills are a form of mills with grinding bodies. The drums can be opened at the front and loaded with the material to be milled (limestone is recommended) and the milling balls. The drums are mounted on a drive roller and a loose roller with adjustable spacing between the axles. At low rotation speeds the comminution is effected by the balls rolling over the material (cascade motion). At higher speeds, some balls are lifted up the wall, become detached and drop down onto the material (cataract motion). Above the critical speed, centrifugal forces ensure that no more comminution takes place. These motion states can be observed through the transparent fronts of the drums.

In order to compare the theoretical power demand with the actual, the power consumption of the drive motor is indicated on a digital display. To assess the success of the comminution, an analytical screening machine (CE 264) is recommended.

The well-structured instructional material sets out the fundamentals and provides a step-by-step guide through the experiments.

Learning Objectives / Experiments

- cascade and cataract motion, critical speed
- theoretical and actual power demand
- degree of comminution dependent on milling time, rotation speed, ball diameter, ball filling, material to be milled

Scope of Delivery

1 ball mill, 3 milling drums, 1 set of milling balls, 1 set of instructional material

Specification

[1] comminution of solids with a ball mill
[2] 2 drums with steel jackets and transparent fronts, 1 steel drum with lifting bars
[3] 1 drive roller with adjustable speed, 1 loose roller
[4] axle spacings of rollers adjustable to accommodate different drums
[5] measurement of power consumption
[6] milling time programmable by timer

Technical Data

2 drums with borosilicate fronts
- D=100mm/185mm, capacity: approx. 1,15L/7,5L
1 drum with lifting bars
- D=185mm, capacity: approx. 7,5L
- roller diameter: approx. 50mm
Measuring ranges
- power consumption: 0...200W
- roller speed: 0...300min^{-1}
1 set of milling balls: D=5/10/15mm

Dimensions and Weight

LxWxH: 600x520x460mm
Weight: approx. 76kg

Required for Operation

230V, 50/60Hz, 1 phase or 120V, 60Hz/CSA, 1 phase

Order Details

083.24500 CE 245 Ball Mill

2E a division of G.U.N.T Gerätebau GmbH, P.O.Box 1125, D-22885 Barsbüttel, t +49 (40)67 08 54-0, f +49 (40)67 08 54-42, E-mail sales@gunt.de
We reserve the right to modify our products without any notifications.
Visit our Websites: www.gunt.de | www.gunt2e.de

BASIC KNOWLEDGE

MIXING

Mixing is the opposite of separating. The materials being mixed may be gaseous, liquid or solid.

During the **mixing of solids**, the processed substances are powderous or granular. The objective is usually to create mixtures as homogeneous as possible. This is illustrated particularly clearly by the example of the manufacture of tablets: inadequate mixing of the starting substances would result in differing agent compositions in the tablets.

During **stirring,** the continuous phase is liquid. A liquid, gas or solid is mixed into a liquid.

Key applications of stirring are:

- **Mixing of miscible liquids**
The purpose is to balance out differences in concentration and temperature. Moreover, the course of the reaction in the mixture can also be controlled, as the reaction speed is dependent on the mix quality of the reaction partners.

- **Mixing of immiscible liquids (emulsifying)**
The liquid phase to be dispersed is in droplet form in the other liquid phase. This is true in the case of cosmetic creams and lotions for example.

- **Dispersion of soluble solids in liquids**
The solid is dispersed in the liquid, and in the process is disintegrated into atoms, molecules or ions. The solid is no longer identifiable as such after being dissolved. Stirring accelerates the dissolution process.

- **Dispersion of an insoluble solid in a liquid (suspension)**
The resultant suspensions tend to segregate, meaning that over time the solid particles would sink. Stable suspensions are created only at particle sizes below 1µm. An example is to be found in the case of paints, in which colour pigment particles are suspended in resins.

- **Gasification of liquids**
Gas bubbles in the liquid are finely distributed by means of a perforated plate or other forms of injectors. One application is the precipitation of iron oxides by injection of air in waste water treatment.

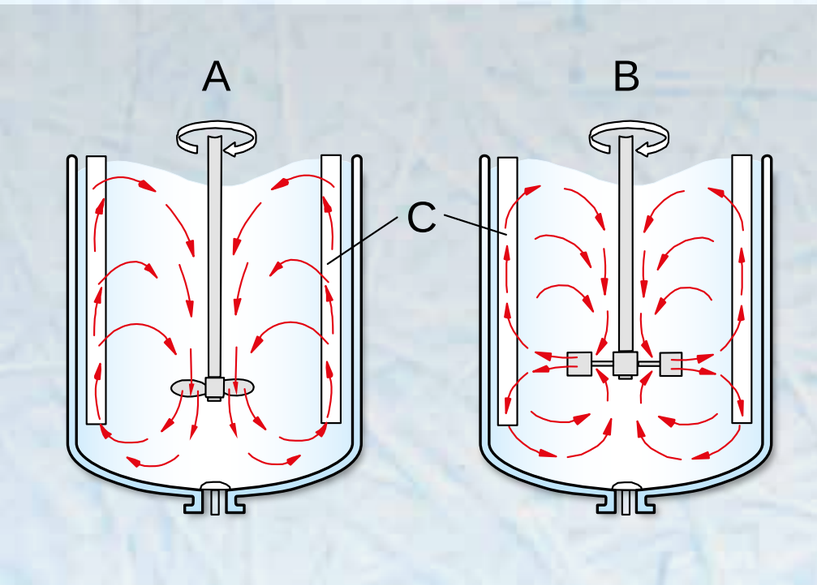

Typical flow fields in stirred tanks
***A** axial-conveying propeller mixer*
***B** radial-conveying plate mixer*
***C** flow impeder*

Stirrers of a wide variety of forms are used, depending on the application. They can be roughly differentiated according to the flow field they create. Accordingly, there are axial, radial and tangential conveying stirrers. Flow impeders or buffers are employed to prevent the entire vessel contents rotating along with the stirrer.

BASIC KNOWLEDGE

AGGLOMERATION

Agglomeration is the opposite of comminution. The terms agglomeration, granulation and pelletisation designate the process of particle size enlargement of solids. Powderous fine material is joined together to form larger particle bodies. The particle bodies can be designated as flock, granulate, agglomerate, pellets, briquettes or tablets. The reason for employing an agglomeration process may be to improve the flow behaviour, to enhance mixability, to reduce dust creation, or to alter shape, size, porosity, strength, etc.

A rough distinction can be made between the following agglomeration methods:

- **Constructive agglomeration**
Individual, free-moving particles are agglomerated together to form larger bodies, or are agglomerated onto existing particle bodies. Often liquids are used as the binding agent. Constructive agglomeration may occur in fluidised beds.
In rolling agglomeration, large particle bodies are formed by snowballing. The technical application is implemented by way of dish or drum granulators or mixers.

- **Compression agglomeration**
An agglomeration is formed from a powderous solid by the action of external compression forces. In tablet production, the powder is compressed in a die with a stamp. Another application is roller pressing, using two smooth rollers (resulting in uneven agglomerations) or rollers with trough-like recesses (resulting in mouldings such as briquettes).

- Other processes: **flocculation** to separate suspensions from liquids; **sintering**.

Different binding mechanisms, with differing adhesive forces, take effect depending on the process (see illustration). A fundamental distinction can be made between mechanisms which involve material binding and those which do not. The most stable are solid archs created by sintering. Solid archs may also be created by other processes if thermo-setting or crystallising binding agents are used.

In constructive agglomeration, adhesion by liquid archs is of primary importance. Depending on the ratio of liquid to solid, the type of liquid and the pore shape and size, adsorption layers permanently bonded to the surface or free-moving liquid archs are produced.

In the case of van der Waals' forces and electrostatic forces, there is no material binding. Van der Waals' forces play a major role in compression agglomeration. Positive bonds occur in fibrous materials such as paper and felt.

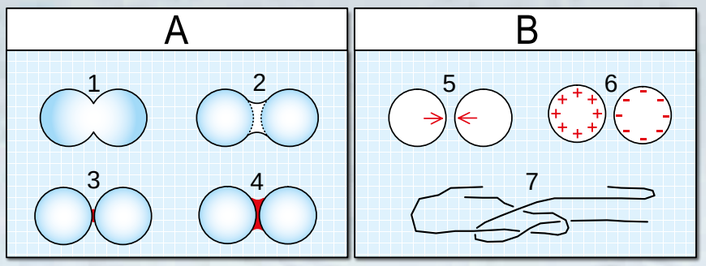

Binding mechanisms in agglomerates:
***A** mechanisms involving material binding*
***B** mechanisms without material binding*
***1** solid arch by sintering*
***2** solid arch made of thermo-setting or crystallising binding agent*
***3** solid arch with permanently bonded adsorption layer*
***4** free-moving liquid arch*
***5** attraction by van der Waals' forces*
***6** electrostatic attraction*
***7** positive bond*

CE 320 Stirring

* **Visualisation of flow fields when using various stirrer types**
* **High-performance stirring machine with speed control**
* **Determination of mixing time of solutions**
* **Mixing of emulsions and suspensions**
* **Influence of mixing processes on heat transfer**
* **Power demand during stirring**

Technical Description

During stirring, the continuous phase is liquid. With CE 320, the production of solutions (solid dissolved in liquid), emulsions (mixture of immiscible liquids) and suspensions (insoluble solid in liquid) can be investigated.

Mixing takes place in a tank which is resistant to chemicals and heat-resistant. With the high-performance stirring machine even high-viscosity mixtures can be produced. The speed is adjustable. The torque is indicated on the unit's digital display. This enables the power demand to be determined.

Nine different, easily interchangeable stirrers are provided. With plastic balls which are dispersed in the water it is possible to observe the characteristic flow fields of the different stirrer types. Flow impeders can be inserted in the tank to investigate their influence on the mixing process. To determine the mixing time and mix quality of solutions, a conductivity meter is available. The device can also be used to measure temperatures.

A removable coiled tube serves as a heat transfer medium. It can be used for heating or cooling with water from the laboratory supply. A valve with precise adjustment is used to adjust the flow rate. This enables the influence of mixing processes on heat transfer to be investigated.

The well-structured instructional material sets out the fundamentals and provides a step-by-step guide through the experiments.

Learning Objectives / Experiments

- flow fields of various stirrer types
- power demand, mixing time, mix quality dependent on
  * stirrer type
  * speed
  * materials used (density, viscosity)
  * insertion of flow impeders
- observation of the suspension state of suspended solids when using different stirrers and at different speeds
- observation of the droplet size of emulsions when using different stirrers and at different speeds
- influence of mixing processes on heat transfer

CE 320 Stirring

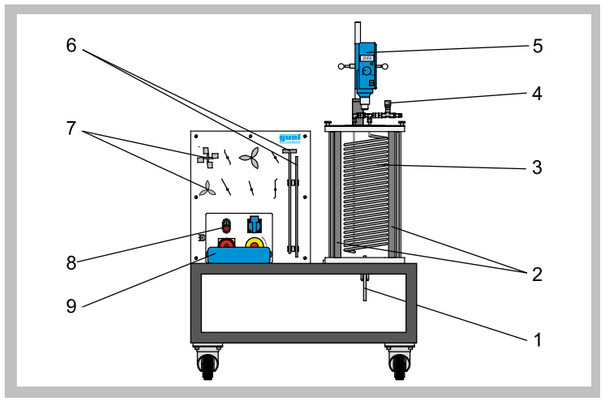

1 outlet valve, 2 flow impeder, 3 coiled tube, 4 coiled tube valve, 5 stirring machine with speed and torque indicator, 6 turbine stirrer and threaded shaft for stirring heads, 7 stirring heads (8 in total), 8 switch box, 9 conductivity meter with probe in case

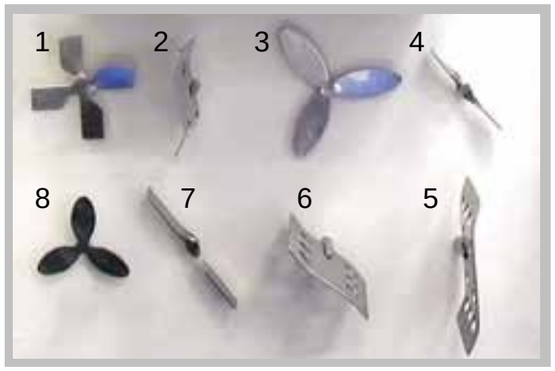

Stirring heads: 1,3,8 propeller stirring heads, 2,5,6 paddle stirring heads, 4,7 propeller stirring heads, angled

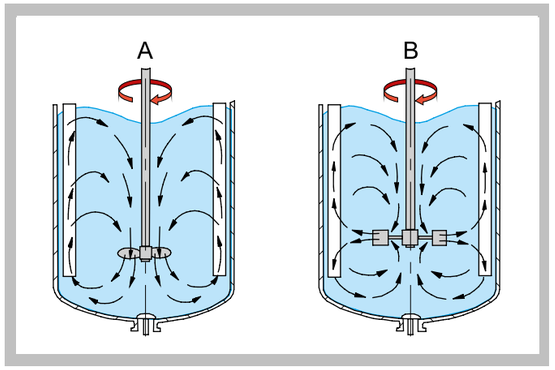

Flow fields in the stirred tank with axial-conveying stirrer (A) and radial-conveying stirrer (B)

Specification

[1] investigation of mixing processes during stirring
[2] transparent stirred tank with 4 removable flow impeders
[3] speed-controlled stirring machine with digital torque indicator
[4] 9 interchangeable stirrers:
axial-, radial-, tangential-conveying
[5] removable coiled tube for cooling or heating with external water supply
[6] portable device for measuring conductivity and temperature

Technical Data

Stirred tank
- capacity: approx. 20L
- material: DURAN glass and PVDF (base)

Stirring machine
- speed: 50...2000min^{-1}
- max. power output on shaft: 100W

Stirrers
- 5 propeller stirring heads
  2x 3 blades, D=70mm / 100mm
  1x 4 blades, D=70mm
  2x 2 blades (angled), D=70mm / 100mm
- 3 paddle stirring heads
  2x paddle: 70x70mm with 3 / 6 holes
  1x paddle: 70x100mm with 10 holes
- 1 turbine stirrer with shaft: D=50mm

Coiled tube
- diameter: approx. 140mm
- material: stainless steel

Measuring ranges
- conductivity: 0...200mS/cm
- temperature: 0...85°C
- speed: 50...2000min^{-1}

Dimensions and Weight

LxWxH: 850x600x1950mm
Weight: approx. 83kg

Required for Operation

230V, 50/60Hz, 1 phase or 120V, 60Hz/CSA, 1 phase
Water connection for coiled tube: 200...300L/h

Scope of Delivery

1 experimental unit
8 different stirring heads
1 threaded shaft
1 turbine stirrer
1 conductivity meter in case
1 packing unit of plastic balls
1 Allen key
1 set of instructional material

Order Details

083.32000 CE 320 Stirring

G.U.N.T Gerätebau GmbH, Hanskampring 15-17, D-22885 Barsbüttel, Phone +49 (40) 67 08 54-0, Fax +49 (40) 67 08 54-42, E-mail sales@gunt.de, Web http://www.gunt.de
We reserve the right to modify our products without any notifications.

CE 255 Rolling Agglomeration

*** Rolling agglomeration with a dish granulator**

*** Strength testing of agglomerates to assess the process**

*** Practical experiments on a laboratory scale**

Technical Description

The terms agglomeration, granulation and pelletisation designate the process of particle size enlargement of solids. This trainer was developed in cooperation with the **Department of Mechanical Engineering and Process Engineering at the Niederrhein University of Applied Sciences in Krefeld**.

A powder (fine material) is continuously fed onto an inclined, rotating dish granulator. A pump delivers granulating liquid to a two-component nozzle. The liquid is atomised over the powder by compressed air. Starting from a small number of moistened particles, a rolling motion produces growing numbers of balls (agglomerates). The fine material in the moved layer tends to remain close to the bottom. It is lifted higher than the forming agglomerates by the rotary motion of the dish. The ball-shaped agglomerates roll along the surface of the layer. When they have attained a certain size, they drop off the rim of the disc. The agglomerates are collected in a tank. Two further tanks are provided for the solid material (for which powdered limestone is recommended) and the granulating liquid (sugar powder diluted in water). The mass flow of solid feed material, the flow rate of the liquid, the speed and the angle of inclination of the disc are adjustable. The compressive strength of the resultant agglomerates can be measured using a laboratory device. To determine these and other key properties of the agglomerates, a balance and drying chamber are also recommended.

The well-structured instructional material sets out the fundamentals and provides a step-by-step guide through the experiments.

Learning Objectives / Experiments

- learning the basic principle and method of operation of an agglomeration unit
- agglomerate size and strength dependent on
  * mass flow of solid feed material
  * flow rate of liquid
  * ratio of solid to liquid
  * dish rotation speed
  * angle of inclination of dish
  * position of solid and liquid feed
  * selected solid
  * selected granulating liquid

CE 255 Rolling Agglomeration

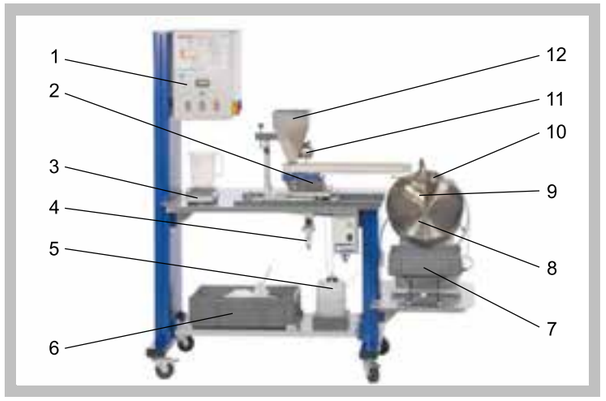

1 switch cabinet, 2 solid material metering device, 3 balance, 4 pressure reducing valve, 5 granulating liquid tank, 6 solids tank, 7 agglomerate tank, 8 dish granulator, 9 scraper, 10 two-component nozzle, 11 vibrator, 12 solids silo

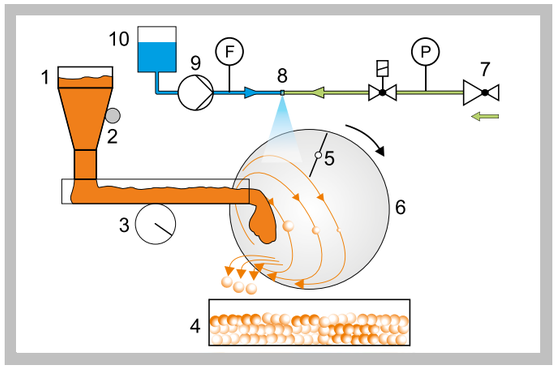

1 solids silo, 2 vibrator, 3 solid material metering device, 4 agglomerate tank, 5 scraper, 6 dish granulator, 7 pressure reducing valve, 8 two-component nozzle, 9 pump, 10 granulating liquid tank; F flow rate, P pressure

Agglomerates

Specification

[1] rolling agglomeration with a dish granulator
[2] dish granulator with adjustable rotation speed and angle of inclination
[3] metering device to adjust the mass flow of solid feed material
[4] two-component nozzle to atomise the granulating liquid with compressed air
[5] peristaltic pump to adjust the flow rate of liquid
[6] air pressure adjustment by pressure reducing valve
[7] positions of solid and liquid feed adjustable
[8] tanks for solid, granulating liquid and agglomerates

Technical Data

Dish granulator
- diameter: approx. 400mm
- rim height: approx. 100mm
- material: stainless steel

Dish drive motor
- power consumption: approx. 750W
- speed: 20...400min^{-1}

Pump
- max. flow rate: approx. 428mL/min

Tanks
- solids silo: approx. 10L
- granulating liquid: 5L
- agglomerates: 10L
- solids: 40L

Measuring ranges
- flow rate: 0...100mL/min
- pressure: 0...10bar
- speed: 4...70min^{-1}

Dimensions and Weight

LxWxH: approx. 1810x810x1800mm
Weight: approx. 200kg

Required for Operation

230V, 50Hz, 1 phase
Compressed air connection: 1...6bar

Scope of Delivery

1 trainer
1 balance
1 shovel
1 measuring cup
1 packing unit of powdered limestone
1 set of instructional material

Order Details

083.25500 CE 255 Rolling Agglomeration

G.U.N.T Gerätebau GmbH, Hanskampring 15-17, D-22885 Barsbüttel, Phone +49 (40) 67 08 54-0, Fax +49 (40) 67 08 54-42, E-mail sales@gunt.de, Web http://www.gunt.de
We reserve the right to modify our products without any notifications.

BASIC KNOWLEDGE

STORAGE AND FLOW OF BULK SOLIDS

The term "bulk solids" generally refers to materials in the form of collections of single or individual particles. These particles may be very fine (powder) or coarse. Examples are ores, cement, foodstuffs or chemical products. Bulk solids are stored in tanks, containers or silos, depending on quantity. The storage facilities must be designed such that they neither impair product quality nor cause disturbances to the removal of the bulk solids.

Bulk solids do not behave like Newtonian fluids either when flowing or when at rest in storage. In contrast to Newtonian fluids, bulk solids can also transmit transverse strain when at rest, and accordingly form surfaces which tend to be stable. Nor are analogies with the behaviour of solids usually possible. For example, in contrast to solids, a bulk solid cannot transmit any significant tensile stresses.

Consequently, in order to describe the behaviour of bulk solids there is a dedicated discipline known as bulk mechanics or powder mechanics, which is founded on that of soil mechanics.

For more information on the subject: Schulze, D.: Powders and Bulk Solids, Springer, Berlin Heidelberg New York (2007)

Typical phenomena when bulk solid is flowing out of a hopper or silo are:

- **Mass flow**
  The entire vessel contents are in motion during discharge of the bulk solid. If the area above the hopper is high enough, a uniform sinkage across the cross-section occurs (piston flow).

- **Funnel flow**
  Only a limited zone above the discharge opening, which can widen out upwards in a funnel shape, is in motion during discharge of the bulk solid. At the sides of the flowing bulk so-called dead zones are formed, in which the material is at rest. The material rests in those zones for a long time, and is only discharged towards the end of the emptying process. Moreover, a bulk solid which is not very free-flowing may become compacted in the dead zones to such an extent that it will not flow out by gravity alone.

- **Arching**
  In the case of poor flowing, cohesive bulk solids, a stable arch may form in the discharge hopper causing the material flow to come to a stop.

- **Segregation**
  When filling storage containers, segregation may occur if the particles are of differing size, shape or density. Segregation by its nature reduces product quality.

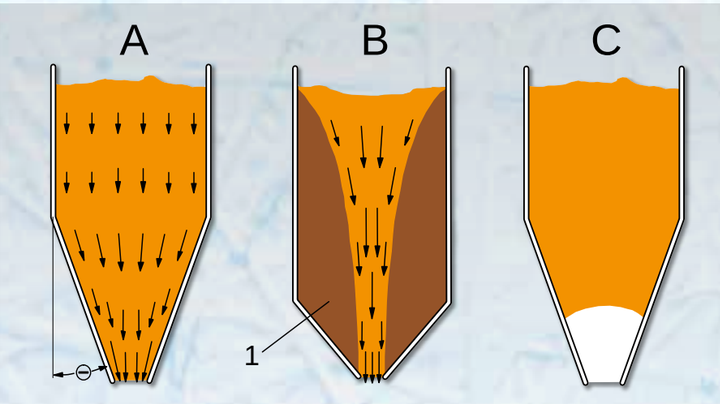

A mass flow, B funnel flow, C arching
Θ angle of hopper wall, 1 dead zones

Whether mass or funnel flow is occurring depends on the flow properties of the bulk solid and on the wall material and angle of inclination of the hopper walls. The required angle of the hopper walls can be calculated if the flow properties are known. The flow properties are measured using shear testers. With these measured values, the minimum size of the discharge opening to avoid arching can also be calculated.

CE 210 Flow of Bulk Solids from Silos

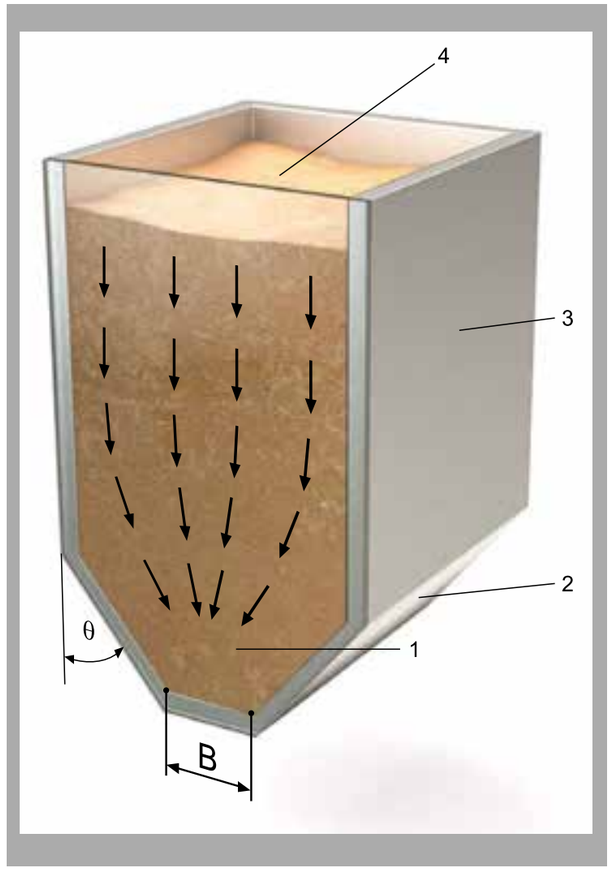

1 transparent front wall, 2 hopper wall, 3 side wall, 4 bulk solid;
Θ angle of hopper wall, B width of outlet cross-section

* Observation of flow profiles

Technical Description

This trainer was developed in cooperation with **Prof. Dr. Schulze (from Braunschweig / Wolfenbüttel University of Applied Sciences)**. It permits observation of flow profiles as bulk solids flow out of silos. To that end, two identically shaped silos with transparent front walls and differing hopper wall materials are provided. As well as the influence of the wall material, the influence of the hopper wall angle of inclination on the outflow behaviour can also be investigated. It is possible to verify segregation processes during filling and emptying by means of sampling at the outlet and analysis using a sieve.

Learning Objectives / Experiments

- influence of wall material and angle of inclination of hopper wall on flow profile (mass/funnel flow) and outflow time
- segregation processes
- arching

Specification

[1] investigation of the outflow of bulk solids from silos with wedge-shaped discharge hoppers
[2] 2 silos with differing hopper wall materials
[3] angle of inclination of hopper wall stepwise variable while outlet cross-section remains constant
[4] front walls of silos made of transparent material
[5] 2 coloured bulk solids with differing particle size ranges to visualise the flow profiles
[6] sieve to examine the segregation
[7] stopwatch to determine times taken to flow out
[8] demonstration of arching by moistening of the bulk solid
[9] practical verification of the design results obtained with CE 200 with regard to mass flow/funnel flow

Technical Data

2 silos with wedge-shaped hoppers
- base body cross-section: approx. 200x200mm
- width of outlet cross-section: approx. 30mm
- height: approx. 600mm

2 bulk solids
- particle size ranges:
  approx. 100...250 / 250...500µm

Sieve mesh width: approx. 250µm

Dimensions and Weight

LxWxH: 800x600x1100mm
Weight: approx. 80kg

Scope of Delivery

1 trainer (2 silos)
1 sieve
1 balance
1 stopwatch
2 packing units of bulk solid (plastic granulate)
1 set of instructional material

Order Details

083.21000 CE 210 Flow of Bulk Solids from Silos

G.U.N.T Gerätebau GmbH, Hanskampring 15-17, D-22885 Barsbüttel, Phone +49 (40) 67 08 54-0, Fax +49 (40) 67 08 54-42, E-mail sales@gunt.de, Web http://www.gunt.de
We reserve the right to modify our products without any notifications.

CE 200 Flow Properties of Bulk Solids

*** Determination of the flow properties of bulk solids using a ring shear tester for the design of silos**

*** Easy handling based on unlimited shear travel**

*** Professional analysis software**

Technical Description

The flow properties of a powder or bulk solid determine how it behaves during handling. For example, material may flow irregularly out of silos, or the flow of bulk solid may come to a stop. In order to avoid these problems in practice, silos can be designed on the basis of measurements using shear testers, such as the Jenike shear tester or a ring shear tester.

In a ring shear tester, a bulk sample is contained in a ring-shaped shear cell. A normal force is exerted on the sample by way of a lid. A hanger from which a variable weight is suspended generates this normal force. A motor moves the shear cell relative to the lid in order to apply shear to the sample. For compaction (pre-shearing) the sample is subjected to a large normal force. An electronically amplified force transducer measures the shear forces which are then recorded by data acquisition software over time. After pre-shearing, shearing to failure is executed with a reduced normal force (strength measurement) and likewise recorded by the software. From the shear force characteristics, properties such as the compressive strength and internal friction of the bulk solid can be determined. To determine the density of the bulk solid, the volume of the bulk sample is ascertained by recording the lowering of the lid using a vernier caliper gauge. So as to also take into account the influence of the hopper wall material on the outflow behaviour, a separate measurement is performed with a ring-shaped sample of the wall material.

An evaluation software is available to determine the flow properties from the experimental results. The flow properties identified are used to determine the optimum geometry of a silo's discharge hopper. Trainer CE 210 is provided for practical verification of the design results obtained in terms of mass flow/funnel flow. The ring shear tester and the evaluation software were developed by **Prof. Dr. Schulze (from Braunschweig / Wolfenbüttel University of Applied Sciences)**.

Learning Objectives / Experiments

- recording the shear force characteristics of bulk solids
- yield locus and wall yield locus design
- determination of flow properties
  * compressive strength
  * internal friction
  * density
  * wall friction angle
- determination of the optimum hopper geometry of a bulk solids silo

CE 200 Flow Properties of Bulk Solids

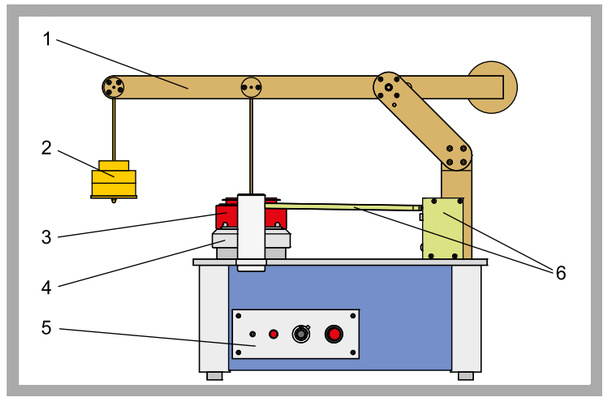

1 loading system for generation of normal force, 2 weights, 3 shear cell, 4 drive unit, 5 controls, 6 force sensor (shear force) with tie rod

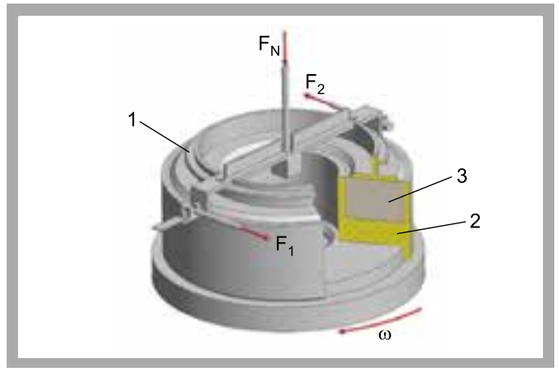

Shear cell for determination of yield loci: 1 lid, 2 shear cell, 3 bulk solid; F_1, F_2 shear forces, F_N normal force, ω direction of rotation of shear cell

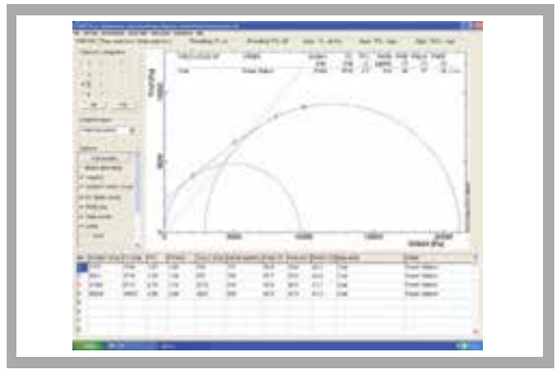

Screenshot from evaluation software: yield locus with Mohr's circles

Specification

[1] design of bulk solids silos using a ring shear tester
[2] 1 ring-shaped shear cell to determine yield loci
[3] 1 ring-shaped shear cell with sample of wall material to determine wall yield loci
[4] shearing of the bulk solid sample by motor rotation of the shear cell
[5] vertical loading of the sample via ring-shaped lid with weights
[6] force sensor to measure the shear forces
[7] vernier caliper gauge to measure the change in height and density of the bulk sample
[8] GUNT software to record the shear force characteristics via USB under Windows Vista or Windows 7
[9] evaluation software to determine the relevant bulk solid parameters

Technical Data

Shear cell
- sample volume: approx. 70cm³
- material: aluminium

Shear cell with sample of wall material
- sample volume: approx. 15cm³
- material: aluminium

Motor
- power consumption: max. 75W
- speed: 500...3000min^{-1}

1 set of weights
- 4x 500g
- 2x 200g
- 2x 100g
- 2x 50g

Measuring ranges
- shear force: 0...40N
- balance: 0...1000g

Dimensions and Weight

LxWxH: approx. 400x240x330mm
Weight: approx. 18kg

Required for Operation

230V, 50/60Hz, 1 phase and 120V, 60Hz, 1 phase

Scope of Delivery

1 experimental unit
1 shear cell
1 shear cell with sample of wall material
1 vernier caliper gauge
1 GUNT software cd + USB-cable
1 evaluation software
1 packing unit of bulk solid
1 balance
1 set of instructional material

Order Details

083.20000 CE 200 Flow Properties of Bulk Solids

G.U.N.T Gerätebau GmbH, Hanskampring 15-17, D-22885 Barsbüttel, Phone +49 (40) 67 08 54-0, Fax +49 (40) 67 08 54-42, E-mail sales@gunt.de, Web http://www.gunt.de
We reserve the right to modify our products without any notifications.

BASIC KNOWLEDGE

FLUIDISED BEDS

A fluidised bed involves two phases: a solid and a fluid (gas or liquid). If a fluid flows through a resting layer of bulk solid at an adequate velocity (fluidisation velocity), the layer is loosened so that individual solid particles enter a suspended state. This state is termed fluidisation. The fluidised bed created in this way behaves similarly to a liquid in terms of flow and thermodynamics.

If the velocity is excessive, particles are discharged from the fluidised bed. Hydraulic or pneumatic transport begins.

Owing to the large contact surfaces between the solid and fluid, heat and material transport processes between the particles and the fluid, and among the particles themselves, are encouraged.

One application of this is in fluidised bed combustion, where combustion takes place in a fluidised bed made of comminuted fuel and hot combustion air. The fluidised bed principle permits low combustion temperatures. As a result, very low nitrogen oxide emission limits can be achieved.

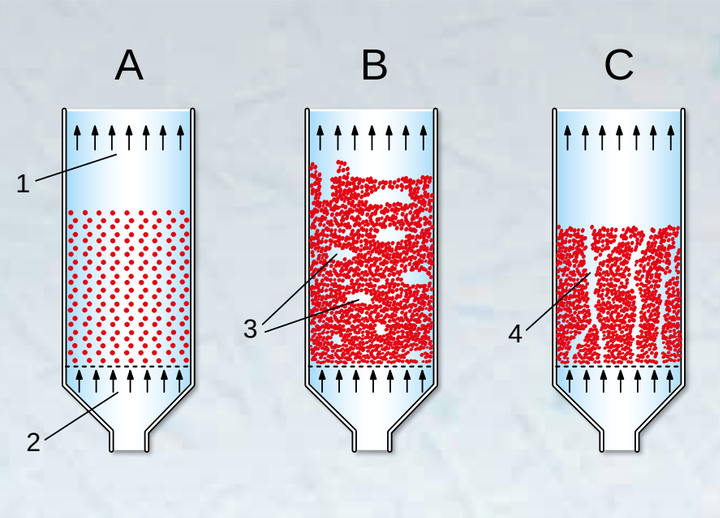

Fluidised bed forms:
***A** homogeneous fluidised bed*
***B** bubbling fluidised bed*
***C** channeling*
***1** fluid outlet, **2** fluid inlet, **3** bubbles, **4** channel*

The following forms of fluidised bed may occur:

- **Homogeneous fluidised bed**
  As the flow velocity of the fluid increases, a uniform volumetric dilation of the fluidised bed occurs. The solid particles are evenly distributed across the entire layer. In reality, behaviour of this kind is to be observed only in liquids when using particles of equal size.

- **Inhomogeneous fluidised bed**
  Classification or sorting processes take place in the fluidised bed. Specifically heavier particles are enriched in the lower zone. When using gases as the fluid, bubbling almost always occurs in the fluidised bed. The bubbles are free of solids. Smaller bubbles merge on their way to the surface to form larger bubbles. At the surface they burst. The surface of the fluidised bed looks like a boiling liquid.

- **Channeling**
  If a fine-grained bulk solid is used as the solid, and if the individual particles adhere to each other, formation of a fluidised bed may not occur. Instead, flow channels are created. There is no flow through the surrounding zones. With such solids, a fluidised bed can only be created by additional stirring.

BASIC KNOWLEDGE

PNEUMATIC TRANSPORT

Pneumatic conveyor systems transport powderous and granular bulk solids by means of a gas flow (mostly air) in pipelines. The bulk solids may be foodstuffs such as grain or pulses for example.

Pneumatic conveyor systems essentially consist of an air compressor, a conveying line and a dust separator (e. g. gas cyclone). Transport may be effected horizontally, vertically, or occasionally inclined.

Typically the conveyor line may be connected to the intake (suction or vacuum) or delivery (positive pressure) side of the air compressor. Combination suction / positive pressure systems also exist. Vacuum conveying systems have a beneficial feature in that the vacuum in the system does not permit any dusty air to leak out. Positive pressure conveying systems enable transport over greater distances and differences in height than vacuum conveyors.

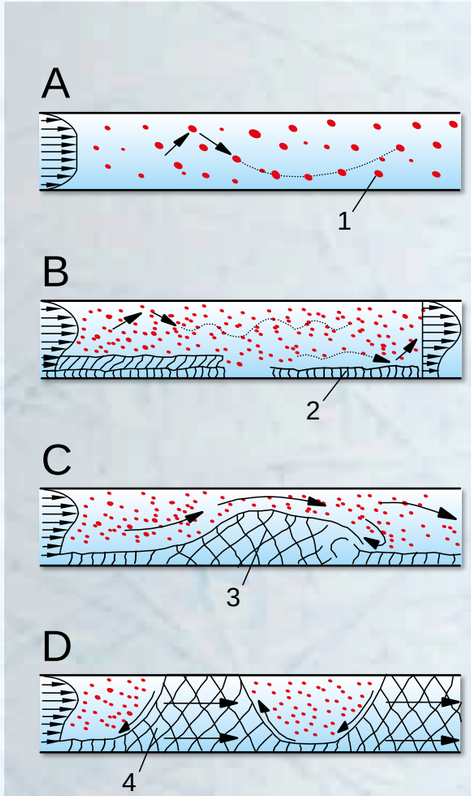

Transport states with velocity profiles in horizontal pipelines:
***A** suspension flow or dilute phase transport*
***B** intermediate flow or strand transport*
***C** dense phase dune transport*
***D** dense phase plug transport*
***1** solid particles, **2** strands*
***3** plug or slug formation from a dune*
***4** moving plug*

Depending on the velocity and solid content of the airflow, different transport states may occur in *horizontal* pipelines:

- **Suspension flow or dilute phase transport**
  At high velocities the solid particles move through the line distributed uniformly across the cross-section. Particles impact against each other or against the pipe wall.

- **Intermediate flow or strand transport**
  If the velocity is reduced while the solid content remains constant, the energy of the flow is no longer sufficient to hold the entire solid mass suspended. Some of the solid particles slide along the bottom of the pipe in the form of strands. The rest are transported in suspension above the strands.

- **Dense phase dune transport**
  If the velocity is reduced further, the solid particles move like a dune. Particles are moved over the summit of the dune and are deposited on its sheltered side. If the velocity is reduced further, incipient plugs may be formed from the dunes which occupy a major part of the cross-section of the pipe.

- **Dense phase plug transport**
  At very low velocities the material occupies the entire cross-section of the pipe and plugs are formed. Plugs advance slowly. If the air compressor does not have sufficient pressure reserves, plug transport may quickly lead to blockage of the pipeline.

In *vertical* pipes the same transport states occur in principle, though gravity is more of an influencing factor.

Not all materials are capable of being transported in dense phase. The detailed behaviour observed in the conveying line is highly dependent upon the particular material's characteristics.

CE 220 *Fluidised Bed Formation*

*** Experimental investigation of the fluidisation process**

*** Comparison of fluidised bed formation in gases and liquids**

*** Pressure loss in fixed beds and fluidised beds**

*** Optimum observation of processes through transparent tanks**

Technical Description

Bulk solids can be transformed from a fixed bed into a fluidised bed when liquids or gases pass through them. The areas of application of fluidised beds include the drying of solids and a wide variety of chemical processes.

CE 220 features two transparent test tanks for fluidised bed formation in water and air. A diaphragm pump delivers water from a storage tank into the bottom of the left side test tank. The water flows upwards through a porous sintered-metal plate. On the sintered-metal plate is a bulk solid. If the velocity of the water is less than the so-called fluidisation velocity, the flow merely passes through the fixed bed. At higher velocities the bed is loosened to such an extent that individual solid particles are suspended by the fluid. If the velocity is increased further, particles are carried out of the fluidised bed. A filter at the top of the test tank holds these particles back. The water flows back into the storage tank.

The right-side test tank is similar in construction to the left-side one. An air flow generated by a compressor flows through it.

Manometers are mounted on both test tanks to measure the pressure loss. The flow rates are adjusted by way of valves, and can be read from flow meters. The test tanks are removable. This makes it easy to change the bulk solid filling.

Glass-shot beads in a range of particle sizes are provided as the bulk solid filling.

The well-structured instructional material sets out the fundamentals and provides a step-by-step guide through the experiments.

Learning Objectives / Experiments

- fundamentals of the fluidisation of bulk solids
- observation and comparison of the fluidisation process in water and air
- pressure loss dependent on flow velocity
- pressure loss dependent on the type and particle size of the bulk solid
- determination of the fluidisation velocity and comparison with theoretically calculated values (Ergun equation)
- dependency of the height of the fluidised bed on the flow velocity
- verification of Carman-Kozeny equation

CE 220 *Fluidised Bed Formation*

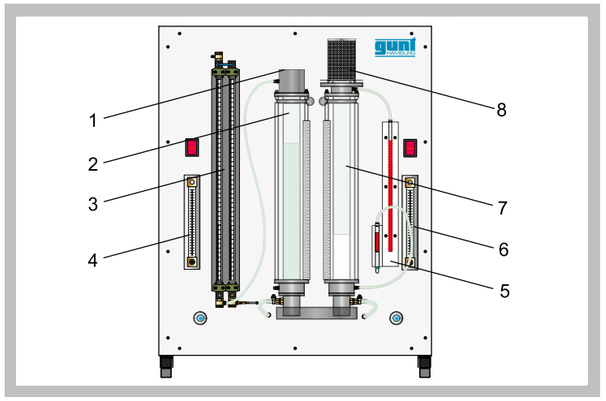

1 water overflow, 2 test tank for water, 3 twin tube manometers, 4 flow meter for water, 5 U-tube manometer, 6 flow meter for air, 7 test tank for air, 8 filter

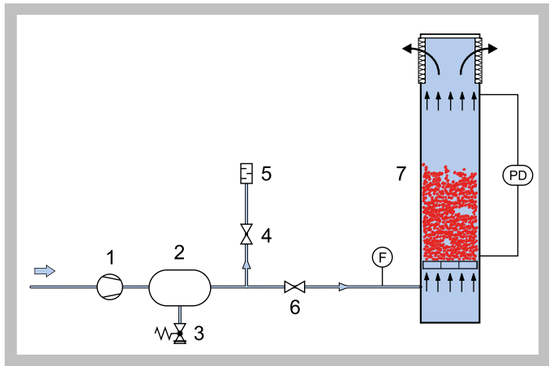

Compressed air supply: 1 compressor, 2 compressed air accumulator, 3 safety valve, 4 bypass valve, 5 sound absorber, 6 needle valve, 7 test tank (air); F flow rate, PD differential pressure

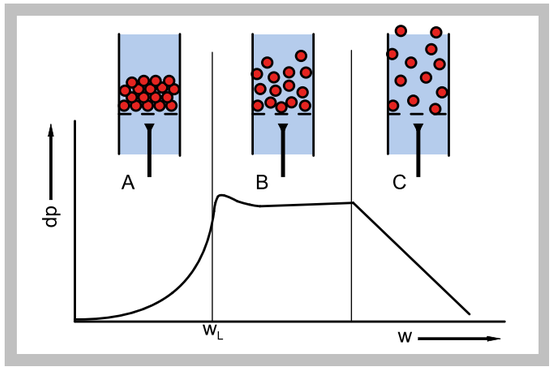

Pressure loss characteristic on a homogeneous fluidising bed: dp pressure loss, w flow velocity, w_L fluidisation velocity;
A fixed bed, B fluidised bed, C transport

Specification

[1] investigation of fluidised bed formation of solids in air and water
[2] 2 transparent test tanks to observe fluidised bed formation in air/water
[3] 1 manometer per tank to measure the pressure loss through each test tank
[4] 1 steel rule per tank to measure the change in height of the fluidised beds
[5] both test tanks removable for filling
[6] storage tank with diaphragm pump for water supply
[7] diaphragm compressor with compressed air accumulator for compressed air supply
[8] adjustment of flow rate for both media by valves and flow meter

Technical Data

2 test tanks
- length: 550mm
- inside diameter: 44mm
- scale division: 1mm
- Material: PMMA

Diaphragm pump (water)
- max. flow rate: 1,7L/min
- max. head: 70m

Diaphragm compressor (air)
- max. flow rate: 39L/min
- max. pressure: 2bar

Tanks
- water storage tank: approx. 4L
- compressed air accumulator: 2L

Measuring ranges
- pressure (water): 0...500mmWC
- pressure (air): 0...200mmWC
- flow rate (water): 0,2...2,2L/min
- flow rate (air): 4...32L/min

Dimensions and Weight

LxWxH: 750x610x1010mm
Weight: approx. 80kg

Required for Operation

230V, 50/60Hz, 1 phase or 120V, 60Hz/CSA, 1 phase

Scope of Delivery

1 experimental unit
1kg glass-shot beads (180...300µm)
1kg glass-shot beads (420...590µm)
1 set of instructional material

Order Details

083.22000 CE 220 Fluidised Bed Formation

G.U.N.T Gerätebau GmbH, Hanskampring 15-17, D-22885 Barsbüttel, Phone +49 (40) 67 08 54-0, Fax +49 (40) 67 08 54-42, E-mail sales@gunt.de, Web http://www.gunt.de
We reserve the right to modify our products without any notifications.

CE 250 *Pneumatic Transport*

*** Pneumatic pressure-lifting of solids in a vertical tube**

*** Transparent tubes and tanks to observe different transport states**

*** Practical experiments on a laboratory scale**

Technical Description

Pneumatic conveyors can be used to transport dispersed solids over great distances in pipelines.

The solid is transported out of a feed tank via a vibrating trough into an air flow. An interchangeable injector disperses the solid in the air flow. The air flow transports the solid upwards in the tube. The transport terminates in a collector tank.

Depending on the velocity and solid content of the air flow, different transport states may occur. At high velocities, the solid is dispersed evenly across the cross-section of the tube (dilute phase transport). If the velocity is reduced, strands and balls form on the wall of the tube which then slide down owing to their higher settling velocity. The strands and balls disintegrate again in the air flow and reform. Reducing the velocity to below the settling velocity of the individual particles ultimately results in plug transport. The different transport states can be observed through the transparent tube.

To identify the pressure loss and the flow velocity, measuring points are provided at all relevant positions. The velocity of the air flow is adjusted by a pressure regulator. The solid mass flow can be adjusted by way of the throw of the vibrating trough on a potentiometer. The compressed air has to be provided from the laboratory supply.

Peas or plastic granulate are recommended for use as the solid.

The well-structured instructional material sets out the fundamentals and provides a step-by-step guide through the experiments.

Learning Objectives / Experiments

- learning the fundamental principle and method of operation of a pneumatic conveyor system
- observation of different transport states dependent on solid content and air velocity
- determination of the suspension velocity of the solid
- determination of the solid content of the flow
- pressure loss dependent on solid content and air velocity

CE 250 *Pneumatic Transport*

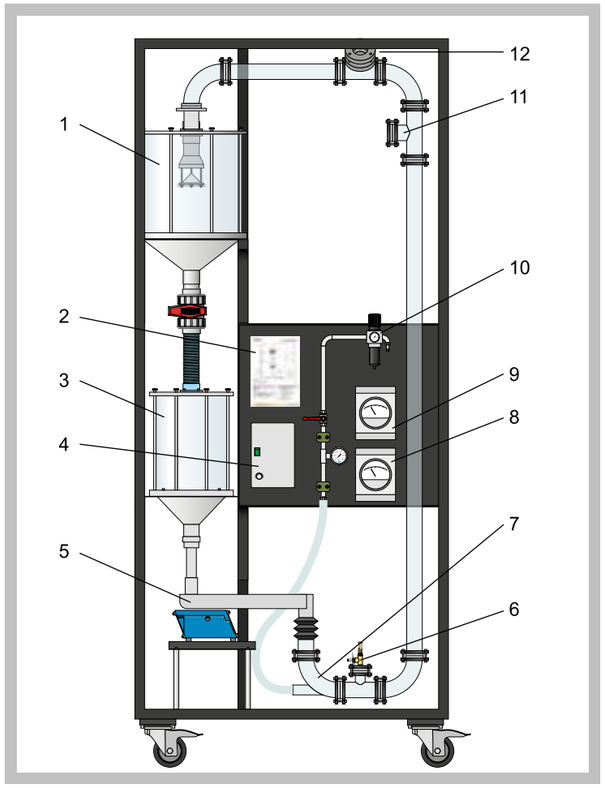

1 collector tank, 2 process schematic, 3 feed tank, 4 vibrating trough controls, 5 vibrating trough, 6 pressure measurement point, 7 injector, 8 differential pressure indicator, 9 velocity indicator, 10 precision pressure regulator, 11 velocity measurement point (Pitot tube), 12 pressure measurement point

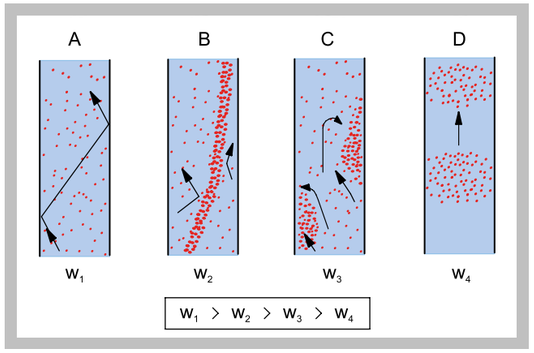

Transport states in vertical transport: A dilute phase transport, B strand transport, C ball transport, D plug transport;
w air velocity

Specification

[1] pneumatic pressure-lifting of solids in a vertical tube
[2] feed of solid into air flow via vibrating trough with adjustable throw
[3] 4 interchangeable injectors to disperse the feed material into the air flow
[4] vertical tube made of glass
[5] collector and feed tanks made of transparent material (PMMA)
[6] collector and feed tanks interconnected by tube with plug valve
[7] precision pressure regulator to adjust input pressure and flow rate
[8] measuring points for pressure loss, temperature and flow velocity

Technical Data

Vertical tube
- height: 2m
- diameter: 50mm

Tanks
- feed: 20L
- collector: 40L

Measuring ranges
- velocity (vertical tube): 0...36m/s
- differential pressure (vertical tube): 0...10kPa
- pressure (inlet): 0...1bar
- temperature: 0...60°C

Dimensions and Weight

LxWxH: approx. 1280x800x2880mm
Weight: approx. 190kg

Required for Operation

230V, 50Hz, 1 phase
Compressed air connection: min. 1500mbar and 60m³/h

Scope of Delivery

1 trainer
4 injectors
1 set of instructional material

Order Details

083.25000 CE 250 Pneumatic Transport

G.U.N.T Gerätebau GmbH, Hanskampring 15-17, D-22885 Barsbüttel, Phone +49 (40) 67 08 54-0, Fax +49 (40) 67 08 54-42, E-mail sales@gunt.de, Web http://www.gunt.de
We reserve the right to modify our products without any notifications.

4 THERMAL PROCESS ENGINEERING

INTRODUCTION

Overview	The GUNT Learning Concepts of Thermal Process Engineering	288

DRYING AND EVAPORATION

Overview	Basic Knowledge Drying	290
Overview	Basic Knowledge Evaporation	291
CE 130	Convection Drying	292
CE 715	Rising Film Evaporation	294

DISTILLATION/RECTIFICATION

Overview	Basic Knowledge Distillation	296
Overview	Basic Knowledge Rectification	297
CE 600	Continuous Rectification	298
CE 602	Discontinuous Rectification	300

ABSORPTION AND ADSORPTION

Overview	Basic Knowledge Absorption	302
Overview	Basic Knowledge Adsorption	303
CE 400	Gas Absorption	304
CE 405	Falling Film Absorption	306
CE 540	Adsorptive Air Drying	308
Overview	CE 583 Adsorption	310
CE 583	Adsorption	312

CRYSTALLISATION AND MEMBRANE SEPARATION PROCESSES

Overview	Basic Knowledge Crystallisation	314
Overview	Basic Knowledge Membrane Separation Processes	315
CE 520	Cooling Crystallisation	316
CE 530	Reverse Osmosis	318

EXTRACTION

Overview	Basic Knowledge Liquid-Liquid Extraction	320
Overview	Basic Knowledge Solid-Liquid Extraction	321
CE 620	Liquid-Liquid Extraction	322
CE 630	Solid-Liquid Extraction	324

Developing the unit operations in thermal process engineering by experiment

We offer you a complete range of products for experimentally demonstrating and developing unit operations in thermal process engineering.

Our experimental units make it easier to understand the complex theoretical principles on which thermal separation processes are based. With these units the motive forces and the effects of heat and material transfer processes necessary for separation can be observed and tested. This prepares the trainee for responsible use of actual systems. In many cases, our products feature data acquisition software to support effective learning.

Visit our website www.gunt.de

THE GUNT LEARNING CONCEPTS OF THERMAL PROCESS ENGINEERING

What does thermal process engineering involve?

The basis of thermal process engineering is thermal separation processes. In mixtures made up of at least two components, heat and material transfer processes are used to selectively change the composition (concentration) of the mixture. The motive forces for these transfer processes (temperature and concentration differences) are created by adding an opposite phase selectively for one or more components in the mixture. Both the mixture of substances to be separated and the opposite phase can be in either solid, liquid or gaseous form. The processes are referred to as phase equilibrium processes and classified based on the combination of phases.

How can the unit operations in thermal process engineering be classified?

PHASE EQUILIBRIUM PROCESSES

LIQUID / GASEOUS	LIQUID / LIQUID	SOLID / LIQUID	SOLID / GASEOUS
■ Evaporation ■ Distillation / Rectification ■ Absorption	■ Extraction ■ Membrane Separation Processes / Reverse Osmosis	■ Extraction ■ Crystallisation ■ Adsorption	■ Drying ■ Adsorption

THE UNIT OPERATIONS...		...AND THE APPROPRIATE GUNT UNIT
Evaporation	▶	CE 715 *Rising Film Evaporation*
Distillation / Rectification	▶ ▶	CE 600 *Continuous Rectification* CE 602 *Discontinuous Rectification*
Absorption	▶ ▶	CE 400 *Gas Absorption* CE 405 *Falling Film Absorption*
Extraction	▶ ▶	CE 620 *Liquid-Liquid Extraction* CE 630 *Solid-Liquid Extraction*
Membrane Separation Processes	▶	CE 530 *Reverse Osmosis*
Crystallisation	▶	CE 520 *Cooling Crystallisation*
Adsorption	▶ ▶	CE 540 *Adsorptive Air Drying* CE 583 *Adsorption*
Drying	▶	CE 130 *Convection Drying*

Why are practical experiments indispensable for training purposes?

Modelling of thermal separation processes is based on the absolute laws of conservation for mass, energy and momentum, as well as phase equilibrium and kinetic methods for modelling heat and material transfer flows. The parameters in the kinetic methods must be measured and the heat and material transfer flows optimised. Practical experiments are essential to obtain a comprehensive understanding of the fundamental recurring process engineering principles such as parallel and countercurrent flow, multistage processes, design of active surfaces and uniform progression of motive forces. Planning, setting up and performing experiments to determine modelling parameters is communicated most clearly and comprehensibly through the use of experimental units.

Prof. Dr.-Ing. habil. Kurt Gramlich (Anhalt University), our technical adviser on thermal process engineering

Prof. Gramlich advised us when we were setting up this range and contributed his many years of experience in the area of thermal process engineering. The text on this page was written by Prof. Gramlich.

Training for specialists and engineers in process engineering:

Reliable learning success with training systems from GUNT

BASIC KNOWLEDGE

DRYING

In general, drying refers to the removal of moisture from solids, gases or liquids. For drying gases and liquids, adsorption is normally used. The food technology industry is an example of where drying solids on a large scale is important.

Thermal drying of solids involves removing moisture from the material by vaporisation or evaporation. The drying characteristics depend on how the moisture is retained within the material. In the first instance, the liquid adhering to the surface of the material to be dried can be removed by vaporisation or evaporation. Once this liquid has been removed, drying of the moisture contained within the capillaries and pores of the material begins. The drying speed reduces due to the need to overcome capillary forces and diffusion resistance. Crystal water which is bonded into the crystal structure of the material, can only be removed by intense heating in addition to low drying speed.

A wide range of process engineering principles are used in drying, due to the variety of industrially moisture containing materials. These materials can have extremely different behaviours.

The following unit operations can be distinguished:

- **Convection drying**
A flowing gas transfers the heat necessary for drying to the material by convection. As well as delivering heat, the gas is also used to remove the moisture given off by the material.

- **Contact drying**
The material is placed on or is passed over heated surfaces. Heat is predominantly transferred to the material by conduction.

- **Radiation drying**
The material absorbs emitted electromagnetic radiation from sources of radiation (e.g. infrared radiators). Heating and evaporation occur not only at the surface of the material but also within it.

- **Freeze drying**
The frozen material is placed in a vacuum below its triple point. Moisture is removed from the material, by changing it directly from a solid to a gaseous state.

- **High frequency drying**
The material is exposed to high frequency electrical fields between the electrodes of a plate capacitor. A part of field energy is absorbed by the material resulting in internal heating and removal of moisture.

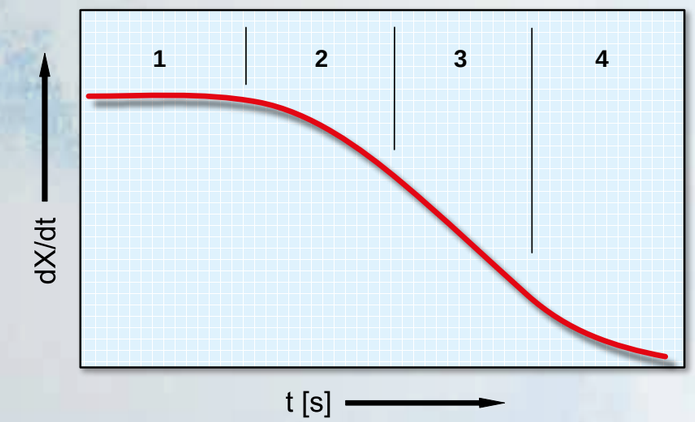

Drying characteristics of a solid with division into drying sections (1-4):
***dX/dt** drying rate, **X** moisture content [kg (water)/kg (dry solid)],*
***t** drying time;*
***1** surface moisture, **2** capillary moisture, **3** pore moisture,*
***4** moisture in crystal structure*

BASIC KNOWLEDGE

EVAPORATION

In the context of thermal process engineering, evaporation is understood to be the separation of a solvent from a solution. An example of a solution is salt water, in which salt (the dissolved solid) is present in the solvent, i.e. water. The addition of heat exclusively evaporates the pure solvent (water in this example) from the solution and carries it away. The remaining solution thus has a higher concentration of dissolved solid than before the addition of heat.

The aim of evaporation can be to obtain the solvent, to create a concentrate solution or to precipitate the dissolved solid by crystallisation.

Industrial applications of evaporation include:

- Increasing the concentration of solutions i.e., salts, alkalis, acids, plastic solutions, fruit and vegetable juices, milk etc.

- Obtaining products i.e., sugar from juices, salt from brine, drinking water from sea water.

Different evaporator designs are used depending on the aim of the separation process. Essentially they are heat exchangers in which steam is normally used as the heating medium. The solution can pass through the evaporator tubes once (straight-through evaporator) or several times (circulation evaporator). For solutions containing temperature-sensitive substances, thin film evaporators are used. These limit the retention time of the solution in areas with high temperatures.

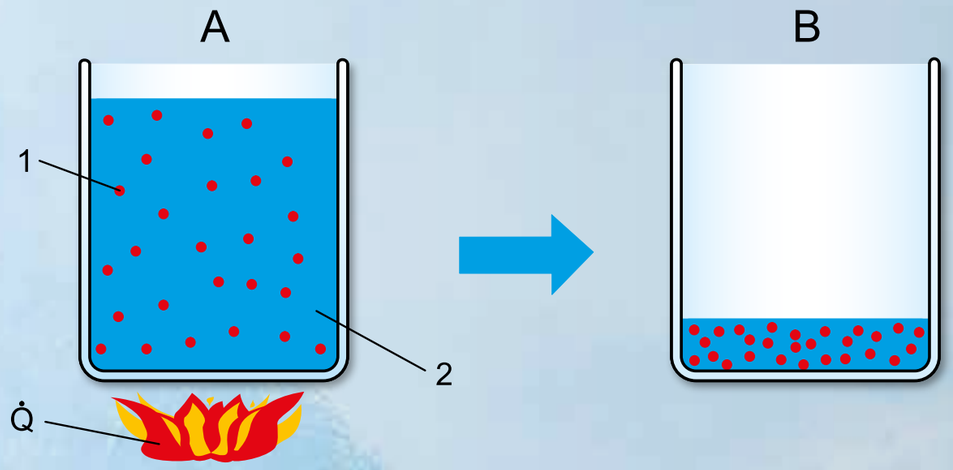

Principle of increasing the concentration of a solution by evaporating the solvent:
***A** solution before evaporation of solvent,*
***B** more concentrated solution after evaporation of solvent,*
***Q̇** addition of heat, **1** dissolved solid, **2** solvent*

CE 130 Convection Drying

*** Convection dryer for drying experiments on granular solids**

*** Plotting of drying curves**

*** GUNT software for data acquisition**

Technical Description

Convection dryers are often used for drying solids in food technology. The CE 130 can be used to investigate and demonstrate the process of convection drying of granular solids.

Four corrosion resistant removable plates are available for drying the solid. They are placed in a drying channel. The plates containing the solid to be dried are exposed to an air flow in the channel. The air flow heats the solid and also removes any moisture released. Air velocity can be adjusted by the speed of a fan. An adjustable heater allows the heating of the air. The transparent door in the drying channel allows the drying process to be observed. A digital balance can be used to follow the changes in weight of the solid due to evaporation or vaporisation of moisture during operation. The air temperature and the relative humidity of the air are measured and digitally displayed by a single combined temperature and humidity sensor before and after the air flow passes over the solid. A further sensor measures the air velocity.

The relevant measured parameters (changes in weight, humidity, temperature, air velocity) can be transferred directly to a PC, where they can then be further processed.

The well-structured instructional material sets out the fundamentals and provides a step-by-step guide through the experiments.

Learning Objectives / Experiments

- influence of air temperature and humidity on drying intensity
- plotting of drying curves with constant external conditions
- determination of drying rate with different air parameters and different solid properties
- evaluation of drying processes using energy and mass balances

CE 130 Convection Drying

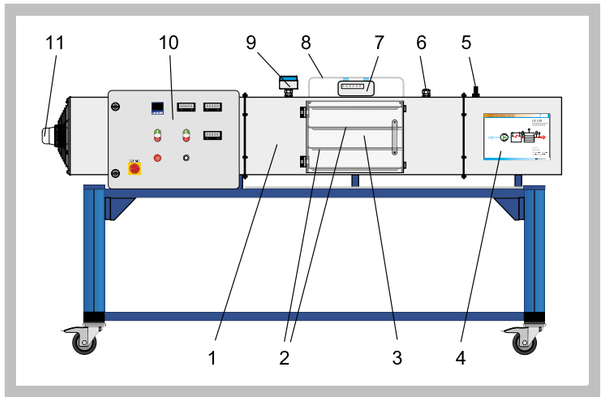

1 drying channel, 2 drying plates, 3 transparent door, 4 process schematic, 5 air velocity sensor, 6 measuring point for humidity and temperature, 7 digital balance, 8 bracket for drying plates, 9 measuring point with humidity and temperature sensor, 10 switch cabinet with digital displays, 11 fan

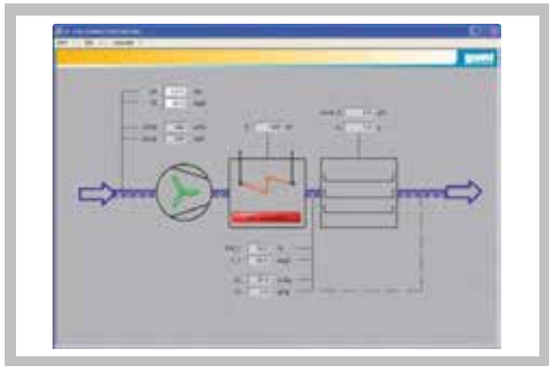

Software screenshot

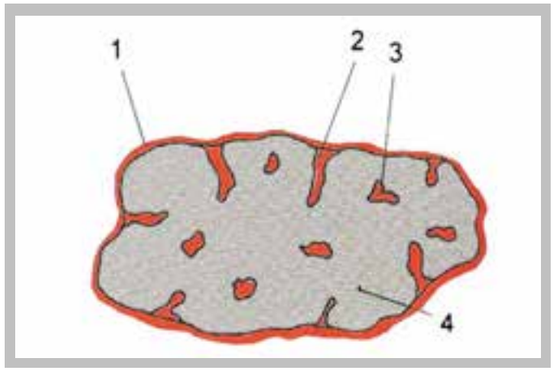

Humid drying material: 1 surface moisture, 2 capillary moisture, 3 pore moisture, 4 crystal water

Specification

[1] drier for investigating convection drying of solids
[2] drying on 4 corrosion resistant plates in a drying channel with an air flow
[3] adjustment of air velocity via speed of fan
[4] air heating with controlled heater
[5] digital balance for measuring the change of weight during drying
[6] 1 combined sensor for measurement of humidity and temperature before and after the solid sample
[7] 1 air velocity sensor
[8] digital stopwatch, battery operated
[9] GUNT software for data acquisition via USB under Windows Vista or Windows 7

Technical Data

Drying channel
- length: 2340mm (with fan)
- internal dimensions: 350x350mm

4 drying plates: 398x320mm

Fan
- power: 33W
- max. output: 700m³/h
- max. speed: 950min^{-1}

Heater
- power: 0...6750W
- with adjustable temperature limiter

Balance
- measuring range: 0…10000g
- resolution: 0,1g

Application temperature: 0…75°C

Measuring ranges
- humidity: 0...100% rel.
- temperature: 0…125°C
- air velocity: 0...2,5m/s

Dimensions and Weight

LxWxH: 2340x750x1350mm
Weight: approx. 125kg

Required for Operation

230V, 60Hz/CSA, 3 phases or
400V, 50/60Hz, 3 phases

Scope of Delivery

1 trainer
1 digital balance
1 stopwatch
4 drying plates
1 GUNT software CD + USB cable
1 set of instructional material

Order Details

083.13000 CE 130 Convection Drying

G.U.N.T Gerätebau GmbH, Hanskampring 15-17, D-22885 Barsbüttel, Phone +49 (40) 67 08 54-0, Fax +49 (40) 67 08 54-42, E-mail sales@gunt.de, Web http://www.gunt.de
We reserve the right to modify our products without any notifications.

CE 715 Rising Film Evaporation

* **Rising film evaporator for increasing the concentration of temperature-sensitive solutions**
* **Hygienic operation due to carefully selected materials such as stainless steel and glass**
* **Cleaning possible while installed**
* **Counterflow process**

Technical Description

Evaporators are used in process engineering and food technology for increasing the concentration of solutions. Part of the solvent is removed by evaporation, which means that the solution retains a higher concentration of dissolved solids. Film evaporators are used in particular for temperature-sensitive solutions such as milk.

The CE 715 allows the operating behaviour of a rising film evaporator to be investigated. The untreated solution is fed from the feed tank below into the evaporator. The evaporator is a double pipe heat exchanger that is heated by steam. The steam pressure on the casing side is adjusted with a PID controller. A cyclone is installed after the evaporator to separate the evaporated solvent and the concentrated solution. The solvent vapour removed is condensed in a water-cooled condenser and collected in a tank. The concentrated solution can also be collected in a tank or fed back into the evaporator for the concentration to be increased further.

The two tanks, the cyclone and the condenser are made of glass for better observation. The system can also be operated under a vacuum to reduce the boiling point of the solvent. All relevant pressures, temperatures and flow rates are measured to allow evaluation and monitoring of the process.

To clean the system while installed, a pump and cleaning nozzles are fitted in the condensate and concentrate tanks.

Common salt and water are the recommended materials for experiments.

The well-structured instructional material sets out the fundamentals and provides a step-by-step guide through the experiments.

Learning Objectives / Experiments

- fundamental principle of film evaporation for increasing the concentration of temperature-sensitive solutions
- investigation of the variables influencing the solid concentration in the solution
- influence of pressure and feed flow rate on the separating process
- influence of flow rate and pressure of the heating steam on the separating process
- investigation of the variables influencing the energy efficiency of the process
- energy balances at heat exchangers
- system cleaning while installed

CE 715 Rising Film Evaporation

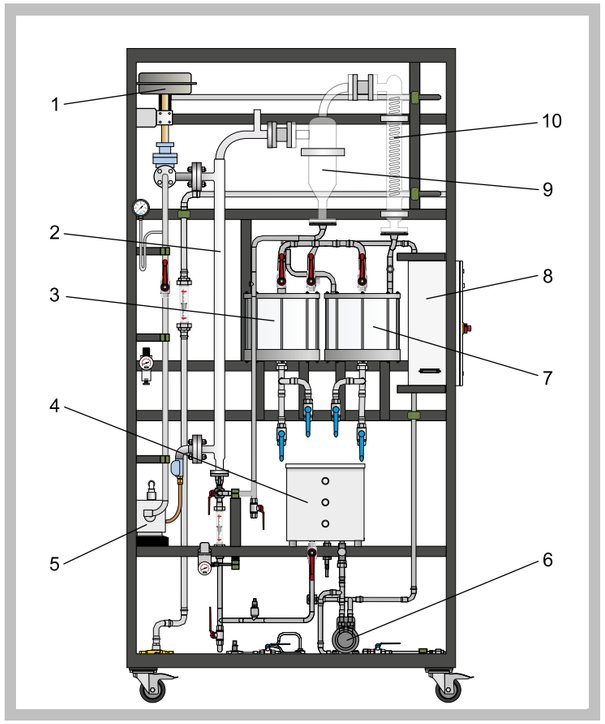

1 heating steam control valve, 2 rising film evaporator, 3 concentrate tank, 4 feed tank, 5 vacuum pump, 6 cleaning pump, 7 condensate tank, 8 switch cabinet, 9 cyclone, 10 condenser

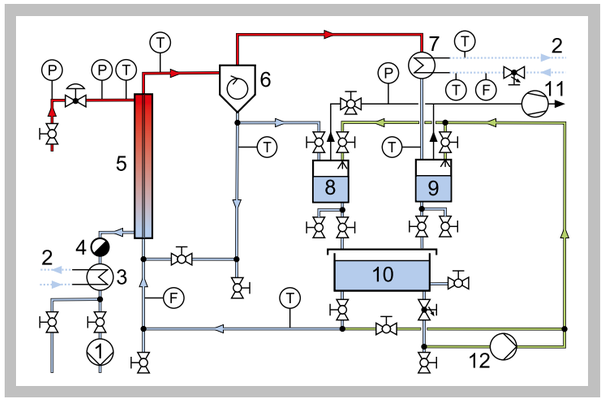

1 heating steam condensate pump, 2 cooling water connection, 3 condensate cooler, 4 steam trap, 5 rising film evaporator, 6 cyclone, 7 condenser, 8 concentrate tank, 9 condensate tank, 10 feed tank, 11 vacuum pump, 12 cleaning pump; F flow rate, P pressure, L level, T temperature

Specification

[1] rising film evaporator for increasing the concentration of temperature-sensitive solutions
[2] stainless steel steam-heated single pipe evaporator
[3] control valve for adjustment of steam pressure via PID controller
[4] vacuum pump and vacuum controller to reduce the evaporation temperature
[5] separation of concentrated solution and evaporated solvent using glass cyclone
[6] glass condenser for condensation of removed solvent vapour
[7] stainless steel feed tank
[8] glass tanks for concentrate and condensate
[9] measurement of flow rate, pressure and temperature
[10] steam supply from laboratory network or CE 715.01

Technical Data

Rising film evaporator
- heat transfer surface: approx. 0,08m²
- length: approx. 1,2m

Control valve: Kvs value: 0,4m³/h
Vacuum pump
- final vacuum: approx. 100mbar
- flow rate: approx. 90L/min

Vacuum controller: -100...0kPa
Condenser for solvent vapour
- heat transfer surface: approx. 0,2m²

Tanks
- feed: approx. 30L
- concentrate, condensate: approx. 10L each

Measuring ranges
- temperature: 7x 0...170°C
- pressure: -1...1bar; 0...6bar (abs); 0...10bar
- flow rate: 2...36L/h; 0...1000L/h

Dimensions and Weight

LxWxH: approx. 1360x750x2640mm
Weight: approx. 300kg

Required for Operation

230V, 50/60Hz, 1 phase or 120V, 60Hz, 1 phase
Cooling water: 200...300L/h
Compressed air (control valve): 3...4bar, max. 300L/h
Heating steam: max. 2bar, 4...6kg/h

Scope of Delivery

1 trainer
1 set of hoses
1 set of instructional material

Order Details

083.71500 CE 715 Rising Film Evaporation

G.U.N.T Gerätebau GmbH, Hanskampring 15-17, D-22885 Barsbüttel, Phone +49 (40) 67 08 54-0, Fax +49 (40) 67 08 54-42, E-mail sales@gunt.de, Web http://www.gunt.de
We reserve the right to modify our products without any notifications.

BASIC KNOWLEDGE

DISTILLATION

Distillation is a unit operation that can be used to fractionate liquid mixtures. It utilises the different volatility of the components of the mixture to be separated. Volatility refers to the tendency of a substance to pass from the liquid phase into the gas phase. Examples of volatile liquids include acetone, alcohol and petrol.

To achieve separation, the liquid mixture is brought to boiling point. The resulting vapour phase is made up of several components, mainly the more volatile components of the mixture. The vapour phase is separated from the liquid phase and condensed (distillate). The less volatile components predominantly remain in the liquid phase.

Distillation does not result in complete separation of the liquid mixture, but rather its division into two mixtures with different contents of volatile and less volatile components. The separating principle is based on the fact that the content of volatile components is greater in the vapour phase than in the liquid phase.

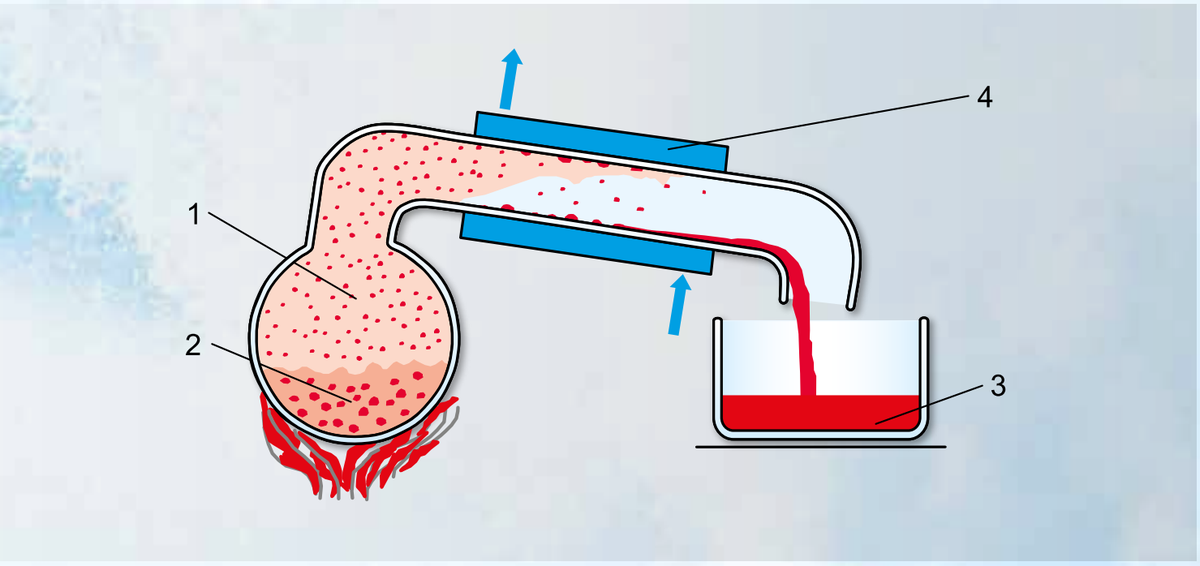

Principle of distillation:
***1** vapour phase, **2** boiling liquid mixture, **3** distillate, **4** condenser*

BASIC KNOWLEDGE

RECTIFICATION

Rectification is an application of distillation and its uses include fractionation of crude oil.

If the distillate obtained during distillation is distilled again, a new distillate is obtained with an even higher concentration of volatile components. As the procedure is repeated, the concentration of volatile components in the distillate increases on each occasion.

In practice, this multi-stage distillation process is carried out in the form of countercurrent distillation (rectification) in a column. The liquid mixture to be separated (feed) is fed to the bottom of the column, where it is brought to boiling point. The vapour produced moves upwards inside the column, exits it at the top and is condensed. Part of the condensate is carried away as top product. The remainder flows back into the column and moves downwards as liquid opposite phase.

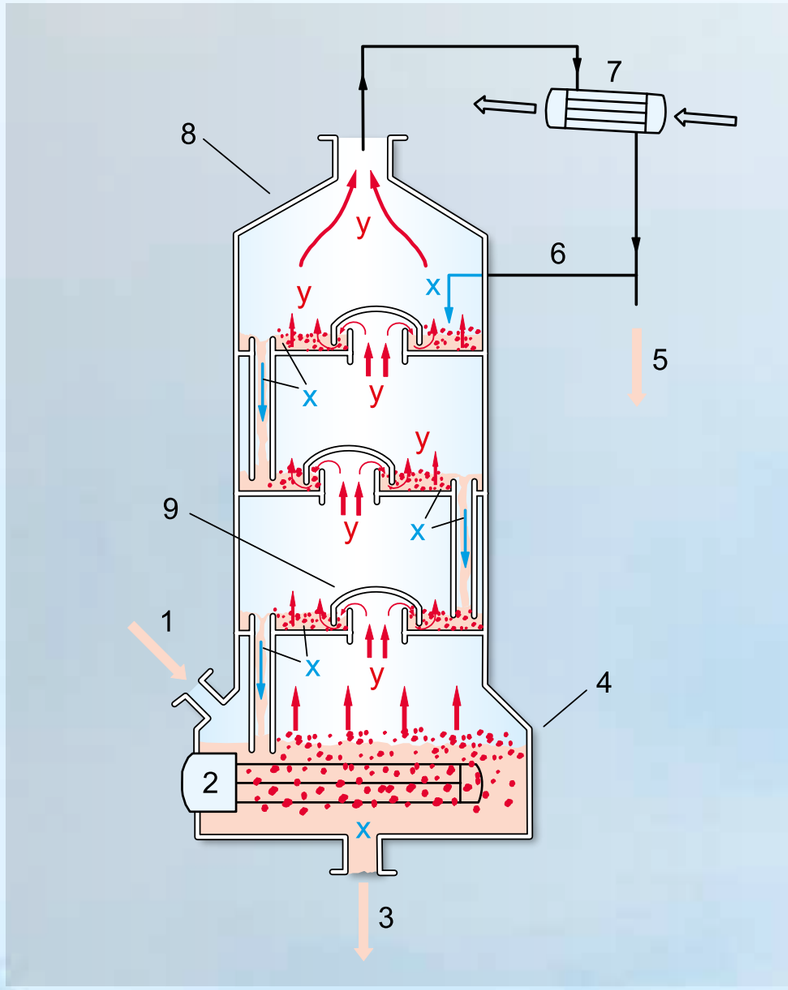

Simplified illustration of a rectification column:
***1** feed, **2** bottom heating, **3** bottom product, **4** bottom of column, **5** top product, **6** reflux, **7** condenser, **8** top of column, **9** tray (here: bubble tray);*
***x** liquid phase, **y** vapour phase*

On its way to the top of the column, the mixed vapour created at the bottom is subjected to an intensive exchange of heat and material with the liquid phase as it passes through the tray or packing in the column. The less volatile components of the vapour phase condense and increase in concentration in the liquid phase. At the same time, the condensation heat released evaporates the more volatile components of the liquid phase. These processes in the column increase the vapour phase concentration of volatile components moving from the bottom to the top of the column. The liquid phase concentration of less volatile components increases in the opposite direction, from the top of the column to the bottom.

CE 600 *Continuous Rectification*

The illustration shows the CE 600 with built in sieve plate column. The packed column can be seen in the foreground.

*** Discontinuous and continuous rectification**

*** Comparison of packed and sieve plate column**

*** Feed preheating using bottom product**

*** Vacuum mode possible**

*** Plates in sieve plate column removable**

*** GUNT software with control functions and data acquisition**

Technical Description

Distillation is used to separate liquid mixtures made up of individual liquids that are soluble in one another. Rectification refers to distillation in a counterflow. Ethanol/water is recommended as the liquid mixture for the CE 600. It is fed into the column. It partially evaporates on its way to the bottom of the column where it is heated to boiling. The mixed vapour produced then moves upwards in the column. The mixed vapour contains a higher concentration of the component with the lower boiling point (ethanol). It leaves the top of the column and is condensed using a condenser and a phase separation tank. Part of this condensate is collected in a tank as product while the rest is fed back into the column. Here, on its way downwards, it undergoes further heating and material exchange with the rising mixed vapour. This exchange causes the vapour phase to become richer in ethanol and the liquid phase to become richer in water. The liquid phase moves to the bottom and can be collected in two tanks.

A heat exchanger allows the feed to be preheated by the bottom product carried away from the column. A sieve plate column and a packed column are available. The sieve plate column has three connections at different heights for the feed. The packed column is filled with Raschig rings. The reflux ratio is adjusted using valves.

Relevant measured values are recorded by sensors, displayed and can be processed on a PC. The software also allows controlling the temperature at the top of column or at the bottom of column (evaporator).

The well-structured instructional material sets out the fundamentals and provides a step-by-step guide through the experiments.

Learning Objectives / Experiments

- investigation and comparison of sieve plate and packed columns
  * in continuous mode
  * in discontinuous mode
  * in vacuum mode
  * with different reflux ratios
  * with different numbers of plates and inlet heights for the feed flow (sieve plate column)
- energy efficiency increase due to feed preheating
- determination of concentration profiles
- determination of temperature profiles
- pressure loss over the column

CE 600 *Continuous Rectification*

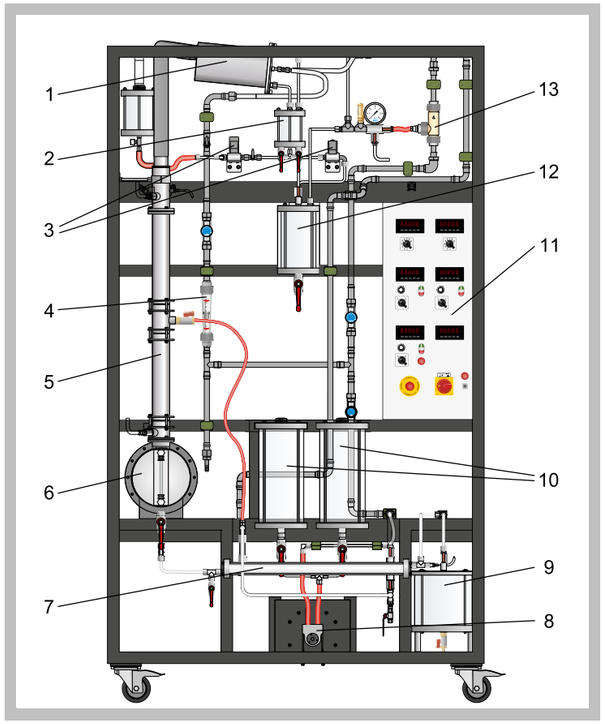

1 top product condenser, 2 phase separation tank, 3 valves (reflux ratio), 4 cooling water flow meter, 5 sieve plate or packed column, 6 evaporator, 7 bottom heat exchanger, 8 feed pump, 9 bottom product tank, 10 feed tank, 11 switch cabinet with displays and controls, 12 top product tank, 13 water jet pump

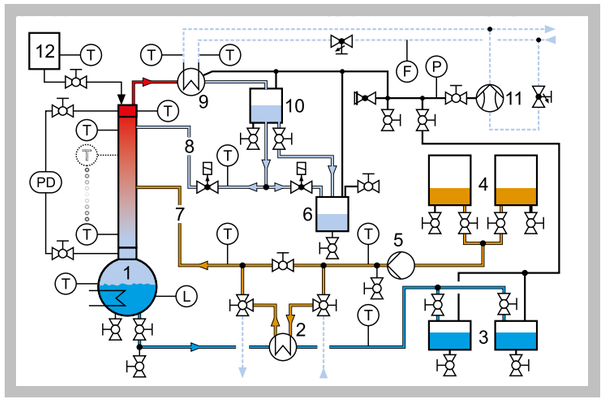

1 evaporator with column, 2 bottom heat exchanger, 3 bottom product tank, 4 feed tank, 5 feed pump, 6 top product tank, 7 feed, 8 reflux, 9 condenser, 10 phase separation tank, 11 water jet pump, 12 solvent tank;
F flow rate, L level, P pressure, PD differential pressure, T temperature;
dotted, blue line: cooling water

Specification

[1] continuous and discontinuous rectification with packed and sieve plate column
[2] interchangeable columns
[3] sieve plate column with 8 plates, 3 feed inlets
[4] packed column with Raschig rings
[5] vacuum mode possible with water jet pump
[6] electrically heated evaporator
[7] tanks for feed, bottom and top product
[8] heat exchanger for bottom product cooling due to feed preheating or cooling water
[9] condenser and phase separation tank for top product
[10] all tanks made of DURAN glass and stainless steel
[11] adjustment of reflux ratio using valves
[12] 8 temperature sensors per column
[13] GUNT software with control functions and data acquisition via USB under Windows Vista or Windows 7

Technical Data

Columns
- internal diameter: 50mm
- height: 780mm

Feed pump
- max. flow rate: 200mL/min

Water jet pump: final vacuum: approx. 200mbar

Tanks
- feed: 2x approx. 5L
- bottom product: 2x approx. 4L
- top product: approx. 1,5L
- phase separation: approx. 0,5L

Heat transfer surfaces
- feed preheating/bottom cooling: approx. 0,03m²
- top product condenser: approx. 0,04m²

Measuring ranges
- temperature: 16 x 0...150°C
- reflux ratio: 0...100%
- heating power: 0...4kW
- column differential pressure: 0...250mbar
- cooling water flow rate: 30...320L/h
- system pressure gauge: -1...0,6bar

Dimensions and Weight

LxWxH: 1300x760x2400mm
Weight: approx. 295kg

Required for Operation

400V, 50/60Hz, 3 phases or 230V, 60Hz/CSA, 3 phases
Cold water connection: 500...1000L/h, drain

Scope of Delivery

1 trainer (with 2 columns)
1 set of hoses
1 set of accessories (tools, seals)
1 GUNT software CD + USB cable
1 set of instructional material

Order Details

083.60000 CE 600 Continuous Rectification

G.U.N.T Gerätebau GmbH, Hanskampring 15-17, D-22885 Barsbüttel, Phone +49 (40) 67 08 54-0, Fax +49 (40) 67 08 54-42, E-mail sales@gunt.de, Web http://www.gunt.de
We reserve the right to modify our products without any notifications.

CE 602 Discontinuous Rectification

*** Discontinuous rectification**
*** Comparison of packed and sieve plate column**
*** Vacuum mode possible**
*** Plates in sieve plate column removable**

Technical Description

Distillation is used to separate liquid mixtures made up of individual liquids that are soluble in one another. Rectification refers to distillation in a counterflow. Ethanol/water is recommended as the liquid mixture for the CE 602. The liquid mixture is added to the evaporator (bottom) tank. The mixed vapour produced moves upwards in the column. The mixed vapour contains a higher concentration of the component with the lower boiling point (ethanol). It leaves the top of the column and is condensed using a condenser and a phase separation tank. Part of the condensate is collected in a tank as product while the rest is fed back into the column. Here, on its way downwards, it undergoes further heating and material exchange with the rising mixed vapour. This exchange causes the vapour phase to become richer in ethanol and the liquid phase to become richer in water. The liquid phase moves to the bottom where it is collected.

A sieve plate column and a packed column are available. The packed column is filled with Raschig rings. The reflux ratio is adjusted using valves.

Relevant measured values are recorded by sensors and displayed digitally on the switch cabinet. The evaporator is adjusted using a PID controller.

A large, clear process schematic on the switch cabinet makes it easy to assign all the process variables. The well-structured instructional material sets out the fundamentals and provides a step-by-step guide through the experiments.

Learning Objectives / Experiments

- investigation and comparison of sieve plate and packed columns
  * in discontinuous mode
  * in vacuum mode
  * with different reflux ratios
  * with different numbers of plates
- determination of concentration profiles
- determination of temperature profiles
- pressure loss over the column

CE 602 Discontinuous Rectification

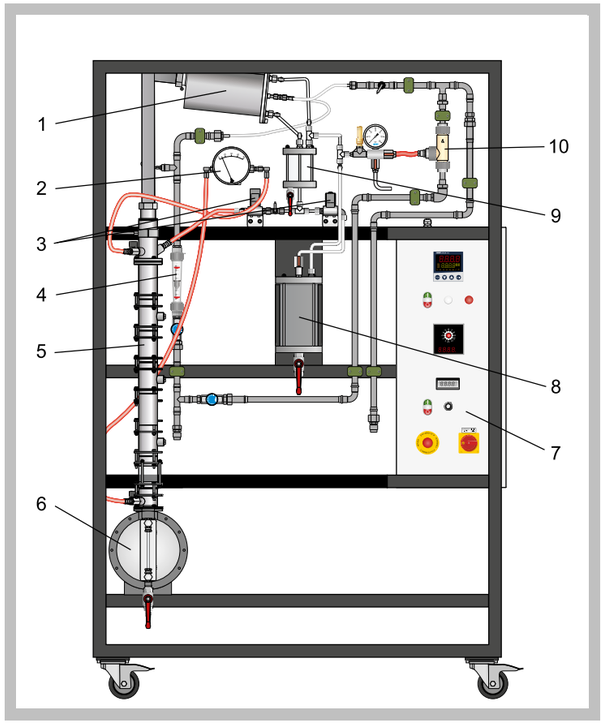

1 top product condenser, 2 manometer (column differential pressure), 3 valves (reflux ratio), 4 cooling water flow meter, 5 sieve plate or packed column, 6 evaporator, 7 switch cabinet with displays and controls, 8 top product tank, 9 phase separation tank, 10 water jet pump

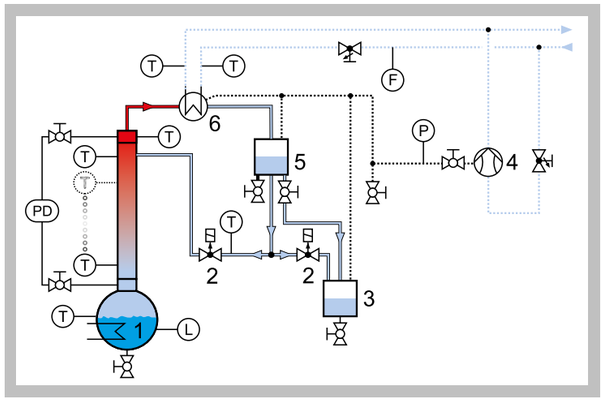

1 evaporator with column, 2 valves (reflux ratio), 3 top product tank, 4 water jet pump, 5 phase separation tank, 6 condenser;
F flow rate, L level, P pressure, PD differential pressure, T temperature;
dotted, blue line: cooling water

Specification

[1] discontinuous rectification with packed and sieve plate column
[2] interchangeable columns
[3] sieve plate column with 8 plates
[4] packed column with Raschig rings
[5] vacuum mode possible with water jet pump
[6] electrically heated evaporator
[7] tank for top product
[8] condenser and phase separation tank for top product
[9] all tanks made of DURAN glass and stainless steel
[10] adjustment of reflux ratio using valves
[11] 8 temperature measuring points per column

Technical Data

Columns: internal diameter: 50mm, height: 765mm
Water jet pump: final vacuum: approx. 200mbar
Tanks
- top product: approx. 2000mL
- phase separation: approx. 500mL
Evaporator
- power output: 0...4kW
- tank: approx. 10L
Heat transfer surface
- top product condenser: approx. 0,04m²

Measuring ranges
- temperature: 13 x 0...150°C
- reflux ratio: 0...100%
- cooling water flow rate: 30...320L/h
- column differential pressure: 0...60mbar
- system pressure gauge: -1...0,6bar

Dimensions and Weight

LxWxH: 1300x750x2100mm
Weight: approx. 185kg

Required for Operation

230V, 60Hz, 3 phases or 400V, 50Hz, 3 phases
Cold water connection: 500...1000L/h

Scope of Delivery

1 trainer (with 2 columns)
1 set of hoses
1 set of accessories (tools, seals)
1 set of instructional material

Order Details

083.60200 CE 602 Discontinuous Rectification

G.U.N.T Gerätebau GmbH, Hanskampring 15-17, D-22885 Barsbüttel, Phone +49 (40) 67 08 54-0, Fax +49 (40) 67 08 54-42, E-mail sales@gunt.de, Web http://www.gunt.de
We reserve the right to modify our products without any notifications.

BASIC KNOWLEDGE

ABSORPTION

Absorption is used to remove one or more gaseous components from a gas flow using a solvent. Absorption can have different aims:

- The gaseous component to be removed is a product that is wanted.
- The gaseous component to be removed is unwanted. This could be the case when removing contaminantes from an exhaust gas flow.
- Production of a liquid; one example would be obtaining hydrochloric acid by absorption of HCl gas in water.

At least three substances are involved in the absorption: the gaseous component to be removed (absorbate), the carrier gas and the solvent (absorbent).

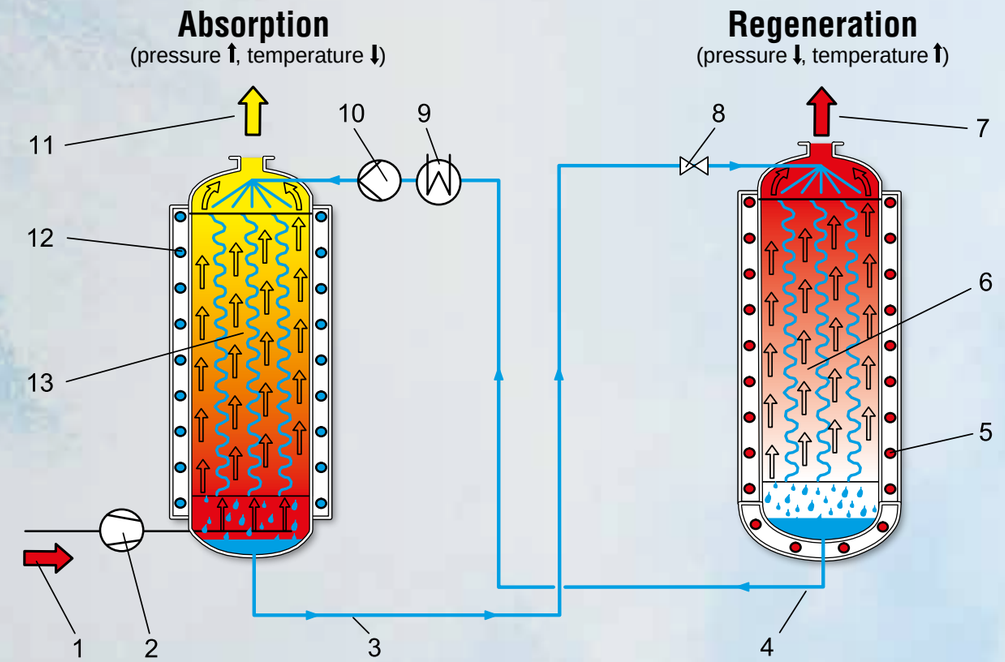

*Absorption system: **1** gas flow with component to be removed and carrier gas, **2** compressor, **3** solvent, charged with component to be removed, **4** regenerated solvent, **5** heating, **6** desorption column, **7** removed gaseous component, **8** expansion valve, **9** cooler, **10** pump, **11** carrier gas, **12** cooling, **13** absorption column*

An appropriate solvent is used, depending on the gaseous component to be removed. The solvent selectively dissolves the gaseous component i.e. the solvent primarily absorbs the component(s) to be removed and not the carrier gas. High pressures and low temperatures enhance absorption. Depending on the type of solvent, the gas is either absorbed by physical dissolving (physical absorption) or chemical bonding (chemical absorption).

To remove the gaseous components from the solvent, an absorption stage is normally followed by a desorption stage for regeneration of the solvent. Here, high temperatures or low pressures are used to reduce the solubility of the gases in the solvent, thus expelling them. The solvent can therefore be recycled for further use.

BASIC KNOWLEDGE

ADSORPTION

Adsorption is used to remove individual components from a gas or liquid mixture. The component to be removed is physically or chemically bonded to a solid surface.

The component removed from a gas or liquid mixture by adsorption can either be a product that is wanted or an impurity. In the latter case, the aim could be to clean exhaust gases.

The solid is referred to as the adsorbent and the adsorbed component as the adsorbate. Where possible, the adsorbent should only bond the adsorbate and not the other components in the mixture to be separated. Other important requirements for the adsorbent are a large specific surface (high porosity) and good regeneration properties. Activated carbon is a frequently used adsorbent.

As adsorption is enhanced by low temperature and high pressure, high temperature and low pressure are used to promote regeneration, i.e. desorption. This means that water vapour or hot inert gas can be used to regenerate the adsorbent.

If a fluid with a constant concentration of a component to be removed (adsorbate) flows into a fixed bed adsorber, the adsorbate is initially completely adsorbed in the lower area of the fixed bed (adsorbent). The fluid leaving the adsorber therefore contains no adsorbate at this time (illustration).

As time progresses, the adsorption capacity in the lower area of the fixed bed decreases. The adsorbate is gradually bonded to the adsorbent in higher and higher areas. This corresponds to the migration of the mass transfer zone (MTZ) over time. When the MTZ has migrated entirely through the fixed bed, breakthrough occurs. The adsorbent cannot bond any more adsorbate over the entire height of the fixed bed. The concentration of the adsorbate at the adsorber outlet then corresponds to the inlet concentration.

Breakthrough curves are used to design fixed bed adsorbers. Their shape characterises the sorption behaviour.

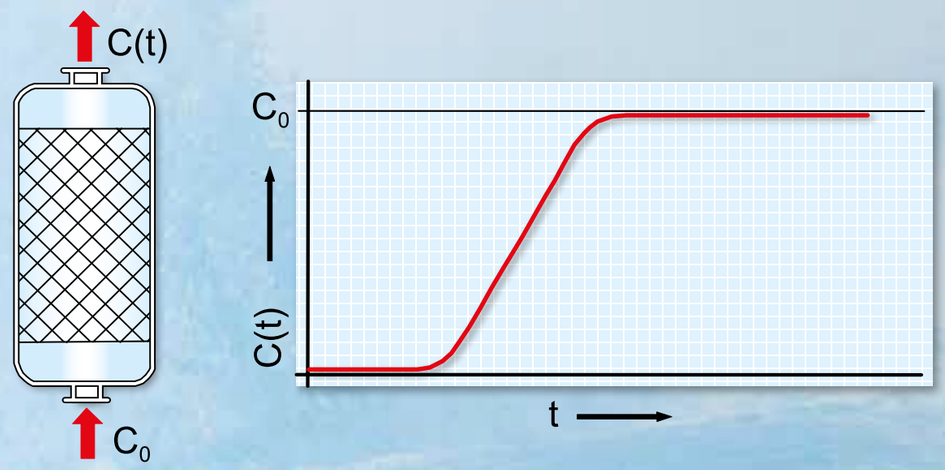

Idealised breakthrough curve for a fixed bed adsorber:
***C_0** inlet concentration of adsorbate in fluid, **C(t)** concentration of adsorbate in fluid at adsorber outlet*

CE 400 Gas Absorption

* Separating a CO_2/air mixture by absorption in counterflow
* DURAN glass packed column with Raschig rings
* Safe operation due to use of water as the solvent and non-hazardous gases
* Regeneration of solvent by vacuum
* Gas analysis with hand-held measuring unit

Technical Description

Absorption is used to remove one or more gaseous components from a gas flow using a solvent.

First of all, a CO_2 and air gas mixture is produced. It is possible to adjust the mixing ratio using valves. The flow rates of the gas components are displayed.

A compressor delivers the gas mixture into the lower section of the absorption column. In the column, part of the CO_2 is separated in the counterflow with the solvent. Water is used as the solvent. The CO_2 is absorbed by the downward flowing water. To separate the absorbed CO_2, the charged water is then fed from the lower section of the absorption column into a desorption column. As the pressure is reduced and the temperature is increased, the solubility of the CO_2 falls. A heater heats the water. A water jet pump generates negative pressure in the desorption column and causes the CO_2 gas to be emitted from the water. A pump then delivers the regenerated solvent back into the absorption column.

The water temperature can be controlled. Flow rate, temperature and pressure are continuously measured. The two-section column is equipped with connections to determine the pressure losses. The pressure loss in the respective sections can be displayed via 2 U-tube manometers. To evaluate the success of the process, the trainer includes outlets for taking gas and liquid samples. The gas samples can be analysed using the hand-held measuring unit supplied.

The well-structured instructional material sets out the fundamentals and provides a step-by-step guide through the experiments.

Learning Objectives / Experiments

- investigation of the absorption process when separating gas mixtures in a packed column
- determination of pressure losses in the column
- representation of the absorption process in an operating diagram
- investigation of the variables influencing the effectiveness of absorption

CE 400 Gas Absorption

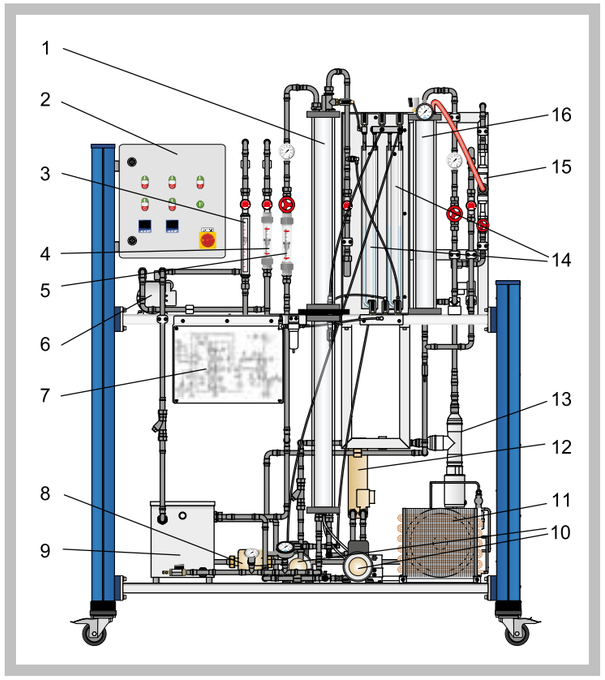

1 absorption column, 2 armoire de commande, 3 CO_2 flow meter, 4 air flow meter, 5 solvent flow meter, 6 compressor, 7 process schematic, 8 pump (cooling), 9 cooling tank, 10 pumps (absorption/desorption), 11 refrigeration system, 12 heat exchanger, 13 heater, 14 U-tube manometer, 15 water jet pump (vacuum), 16 desorption column

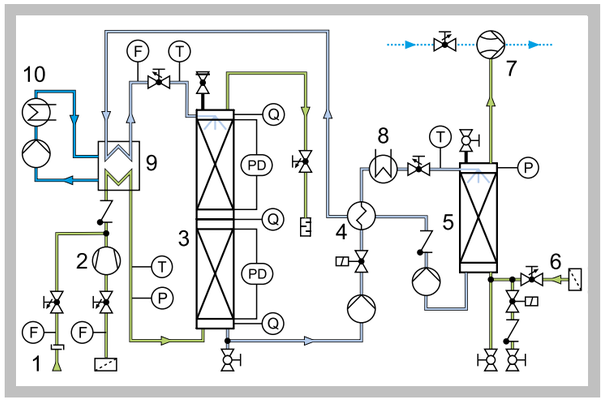

1 external CO_2 compressed gas cylinder with pressure reducing valve, 2 compressor (air), 3 absorption column, 4 heat exchanger, 5 desorption column, 6 air for desorption, 7 water jet pump (vacuum), 8 heater, 9 cooling tank, 10 refrigeration system; F flow rate, P pressure, PD differential pressure, T temperature, Q sampling point (gas)

Specification

[1] separation of CO_2/air mixture by absorption in counterflow with water
[2] production of gas mixture using CO_2 from compressed gas cylinder and ambient air
[3] adjustment of mixing ratio using valves
[4] compressor for delivering the gas mixture into the absorption column
[5] DURAN glass absorption column (packed with Raschig rings) and desorption column
[6] continuous solvent regeneration in circuit with desorption column under vacuum
[7] 1 pump for desorption column and 1 pump for returning solvent to absorption column
[8] water temperature control with heater and refrigeration system

Technical Data

Absorption column
- height: 2x 750mm, internal diameter: 80mm

Desorption column
- height: 750mm, internal diameter: 80mm

2 pumps (absorption/desorption)
- max. flow rate: 17,5L/min
- max. head: 47m

1 pump (cooling)
- max. flow rate: 29L/min
- max. head: 1,4m

Compressor
- max. positive pressure: 1bar
- max. flow rate: 4,2m³/h

Measuring ranges
- flow rates:
  air: 0,2...2,4Nm³/h
  solvent: 50...600L/h
  CO_2: 0,4...5,4L/min
- temperature: 1x 0...80°C, 2x 0...60°C
- pressure: 1x 0...2,5bar, 1x -1...0,6bar
- differential pressure: 2x 0...250mmWC
- CO_2-content: 0...100vol%

Dimensions and Weight

LxWxH: 1920x790x2300mm
Weight: approx. 290kg

Required for Operation

230V, 50/60Hz, 1 phase or
230V, 60Hz/CSA, 3 phases
CO_2 gas cylinder with pressure reducing valve,
water connection: 250L/h, drainage

Scope of Delivery

1 trainer
1 hand-held measuring unit for gas analysis
1 set of hoses
1 set of instructional material

Order Details

083.40000 CE 400 Gas Absorption

2E a division of G.U.N.T Gerätebau GmbH, P.O.Box 1125, D-22885 Barsbüttel, t +49 (40)67 08 54-0, f +49 (40)67 08 54-42, E-mail sales@gunt.de
We reserve the right to modify our products without any notifications. Visit our Websites: www.gunt.de | www.gunt2e.de

CE 405 Falling Film Absorption

* Separation of oxygen from an air flow by absorption in a falling film column
* Continuous regeneration of the solvent
* Safe operation due to use of water as the solvent and non-hazardous gases
* Regeneration of the solvent with nitrogen by stripping
* Transparent materials for optimal observation of the processes

Technical Description

Absorption is used to remove one or more gaseous components from a gas flow using a solvent. Selective absorption is an important industrial process for the treatment of gas mixtures. CE 405 can be used to investigate the basic processes on the water-oxygen-nitrogen system.

A compressor supplies ambient air from below into the absorption column. Water flows down as a thin film at the edge of the absorption column. The air flows upwards centrally in the column. A portion of the air's oxygen is dissolved in the water film. The air flow exits the column at the top. The water containing the dissolved oxygen leaves the column at the bottom and flows into a tank. A pump supplies the water with the dissolved oxygen to the head of the desorption column.

The desorption column is a simple tube in which the water flows downwards. Nitrogen from a compressed gas cylinder enters at the base of the column. The nitrogen rises to the top in the form of dispersed bubbles in the water. The partial pressure of the oxygen in water is higher than the partial pressure in the gas phase (nitrogen). For this reason, a portion of the oxygen passes over from the water into the gas phase (stripping). This process leads to the water's absorbing capacity for oxygen increasing.

A pump supplies the solvent regenerated in this way into a channel circulating the upper part of the absorption column. From here the water again flows along the inner wall of the absorption column as a thin falling film and absorbs a portion of the air's oxygen.

The oxygen concentration and temperature are continuously measured both upstream and downstream of the absorption column. Valves and flow meters make it possible to adjust the air flow rate and solvent flow rate. Transparent materials allow optimal observation of the processes in both columns.

The well-structured instructional material sets out the fundamentals and provides a step-by-step guide through the experiments.

Learning Objectives / Experiments

- investigation of the absorption process during the separation of oxygen from an air flow in a falling film column
- balance of the process
- determination of the mass transfer coefficient

CE 405 Falling Film Absorption

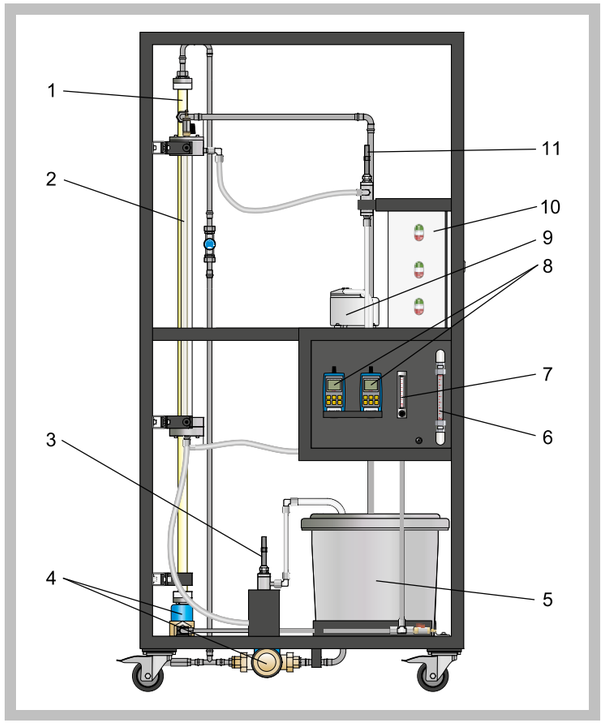

1 desorption column, 2 absorption column, 3 oxygen and temperature sensor downstream of absorption, 4 pumps, 5 tank, 6 flow meter (water), 7 flow meter (air), 8 hand-held measuring units (oxygen concentration), 9 compressor, 10 switch cabinet, 11 oxygen and temperature sensor upstream of absorption

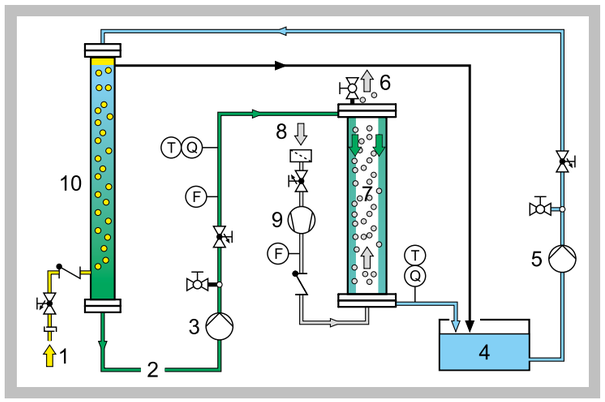

1 nitrogen inlet (external), 2 regenerated solvent, 3 pump, 4 tank (solvent with dissolved oxygen), 5 pump, 6 air outlet, 7 absorption column, 8 air inlet, 9 compressor, 10 desorption column; F flow rate, Q oxygen concentration, T temperature

Specification

[1] falling film column for the absorption of oxygen from the ambient air in a solvent (water)
[2] counterflow process
[3] 1 compressor for supplying ambient air into the falling film column
[4] continuous regeneration of the solvent with nitrogen in a desorption column by stripping
[5] pump for desorption column
[6] pump for recirculating the solvent to the absorption column
[7] measurement of oxygen concentration, temperature and flow rate
[8] 2 hand-held measuring units for measuring the oxygen concentration upstream and downstream of the absorption column

Technical Data

Absorption column
- height: 890mm
- inner diameter: 32mm
- material: glass

Desorption column
- height: 1650mm
- inner diameter: 24mm
- material: PMMA

2 Pumps
- max. flow rate: 58L/min each
- max. head: 3,7m each

1 Compressor
- max. positive pressure: 2bar
- max. flow rate: 23L/min

1 Tank
- capacity: approx. 50L
- material: plastic

Measuring ranges:
- water flow rate: 40...360mL/min
- air flow rate: 20...360NL/h
- temperature: 2x 0...50°C
- oxygen concentration: 2x 0...70mg/L

Dimensions and Weight

LxWxH: 1050x700x2140mm
Weight: approx. 135kg

Required for Operation

230V, 50Hz, 1 phase
Nitrogen gas cylinder with pressure reducing valve

Scope of Delivery

1 trainer
2 hand-held measuring units for measuring oxygen
1 calibration set for oxygen sensor
1 set of hoses
1 set of instructional material

Order Details

083.40500 CE 405 Falling Film Absorption

G.U.N.T Gerätebau GmbH, Hanskampring 15-17, D-22885 Barsbüttel, Phone +49 (40) 67 08 54-0, Fax +49 (40) 67 08 54-42, E-mail sales@gunt.de, Web http://www.gunt.de
We reserve the right to modify our products without any notifications.

CE 540 Adsorptive Air Drying

*** Adsorptive drying of humid air**

*** Continuous process with regeneration of adsorbent**

*** Transparent columns and adsorbent with indicator to observe the mass transfer zone**

*** GUNT software with control functions and data acquisition**

Technical Description

The CE 540 has been specifically designed to enable the complex theoretical principles of adsorption processes to be explained clearly and comprehensibly by means of experimentation.

A compressor draws in ambient air. The air flows through the water bath of a humidifier and thereafter has a relative humidity of 100%. Before the air flows from below into the adsorption column, its relative humidity and temperature are set using a heater. The humid air flows through the adsorbent (silica gel), which is placed as a fixed bed inside a transparent column. The quantity of humidity contained in the air is adsorbed in the process. The adsorbent contains an indicator. The colour of this indicator shows the position of the mass transfer zone (MTZ). The air dried in this way exits the column and flows out into the open.

To regenerate the adsorbent, ambient air is drawn in by a second compressor. The air is heated and flows from above into the column. This desorption process can also be observed through the transparent column. The trainer enables simultaneous investigation of the adsorption and desorption processes. Once the capacity of the adsorbent in one column is exhausted, the humid air is fed through a second column with regenerated adsorbent to dry it.

A circuit system featuring a pump and a refrigeration system is provided to adjust the temperature of the water bath in the humidifier. The temperature and humidity of the air being dried are adjusted by software. The flow rates of the two air flows can be adjusted by valves.

By recording the relative humidities and temperatures at all relevant points, the two processes can be fully balanced. The measured values are recorded by software. The software permits the adsorption and desorption processes to be depicted in a h-ω diagram and enables breakthrough curves to be plotted.

The well-structured instructional material sets out the fundamentals and provides a step-by-step guide through the experiments.

Learning Objectives / Experiments

- fundamental principle of adsorption and desorption
- investigation of the variables influencing adsorption and desorption
  - * air flow rates
  - * air humidity and temperature
  - * bed height of adsorbent
- depiction of the processes in a h-ω diagram
- plotting of breakthrough curves and determination of breakthrough time

CE 540 Adsorptive Air Drying

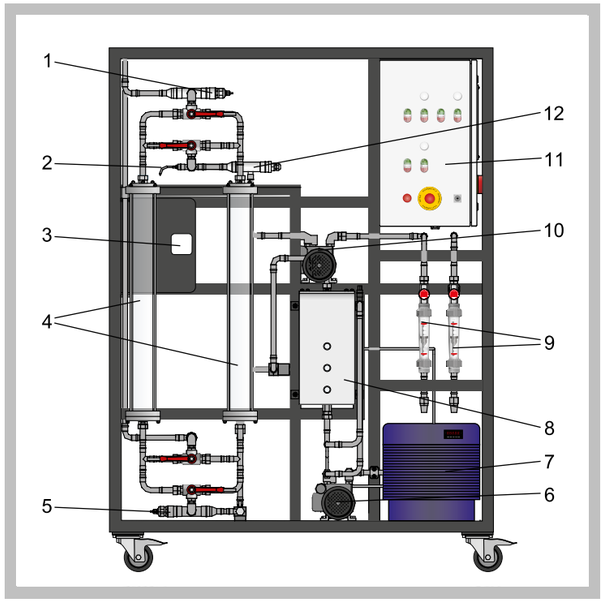

1 dried air humidity and temperature sensor, 2 regenerative air temperature sensor, 3 ambient air humidity and temperature sensor, 4 adsorption columns, 5 humidified feed air humidity and temperature sensor, 6 feed air compressor, 7 refrigeration system, 8 humidifier (water bath), 9 regenerative air and feed air flow rate sensors, 10 regenerative air compressor, 11 switch cabinet with controls, 12 regenerative air heater

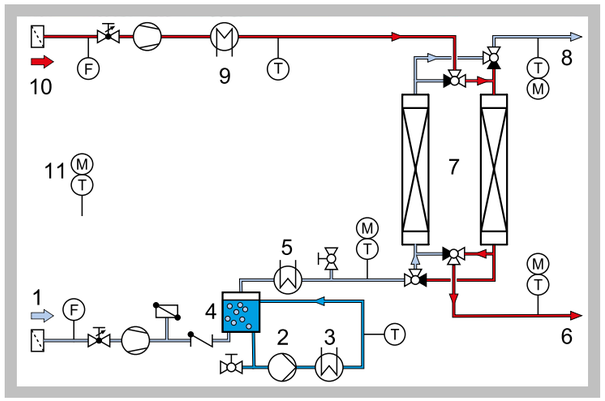

1 feed air (blue), 2 humidifier pump, 3 refrigeration system, 4 humidifier (water bath), 5 heater, 6 charged regenerative air (red), 7 adsorption columns, 8 dried air, 9 heater, 10 air for regeneration, 11 ambient air;
M humidity, T temperature, F flow rate

Specification

[1] continuous adsorptive air drying
[2] 2 columns for alternating charging and regeneration of the adsorbent
[3] observation of mass transfer zone by using transparent columns and adsorbent with indicator
[4] 2 compressors to deliver the feed air and regenerative air out of the ambient atmosphere
[5] humidification of the feed air by flowing through a water bath
[6] circular system with pump and refrigeration system to adjust the water bath temperature
[7] adjustment of relative humidity and temperature of feed air by heater
[8] heater for temperature adjustment of the regenerative air
[9] adjustment of regenerative air and feed air flow rates by valves
[10] GUNT software with control functions and data acquisition via USB under Windows Vista or Windows 7

Technical Data

2 columns
- diameter: approx. 80mm
- height: approx. 800mm

2 compressors
- max. positive pressure: 1bar
- max. flow rate: 8m³/h

Humidifier pump
- max. flow rate: 600L/h
- max. head: 1,5m

Refrigeration system
- refrigerating capacity: 395W at temperature difference 10K / 250L

2 electric air heaters
- power output (feed air): 160W
- power output (regeneration): 2x 250W

Measuring ranges
- flow rate: 2x 0...10Nm³/h
- air temperature: 3x 0...50°C; 1x 0...200°C, 1x -25...125°C
- air humidity: 4x 0...100% rel.
- water temperature: 1x 0...50°C

Dimensions and Weight

LxWxH: 1390x750x1890mm
Weight: approx. 150kg

Required for Operation

230V, 50/60Hz, 1 phase or 230V, 60Hz/CSA, 3 phases

Scope of Delivery

1 trainer, 1 packing unit of silica gel E, 1 hose, 1 set tools
1 GUNT software CD + USB cable
1 set of instructional material

Order Details

083.54000 CE 540 Adsorptive Air Drying

CE 583 ADSORPTION

All components are clearly arranged on a mobile trainer.

The ideal way to teach and learn about adsorption in all its aspects

One method of removing dissolved substances from water is adsorption. In water treatment, adsorption is mainly implemented with continuous-flow adsorbers. The adsorbent in most widespread use is activated carbon.

- continuous process
- two adsorbers with activated carbon filling
- reuse of the treated water (closed water circuit)
- control of water temperature

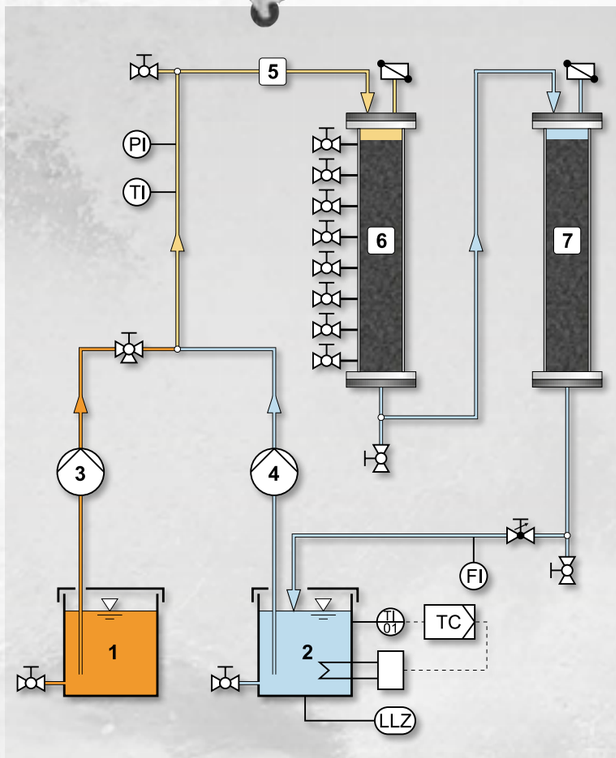

Process schematic of CE 583:
***1** concentrated adsorbate solution, **2** treated water,*
***3** metering pump, **4** treated water pump, **5** raw water,*
***6** adsorber, **7** safety adsorber*

Primary component of CE 583: adsorber with sampling points

Precise adjustement of the adsorbate concentration in the raw water using high quality pumps

Tanks for adsorbate solution and treated water made of stainless steel

EXTENSIVE RANGE OF LEARNING OBJECTIVES

- recording of concentration profiles
- recording of breakthrough curves
- relationship between concentration profiles and breakthrough curves
- determining the mass transfer zone
- an adsorber's mass balance
- an adsorber's efficiency
- predicting breakthrough curves
- scale-up of the results to industrial scale
- detection of the following influencing factors
  - contact time
  - temperature
  - mode of operation

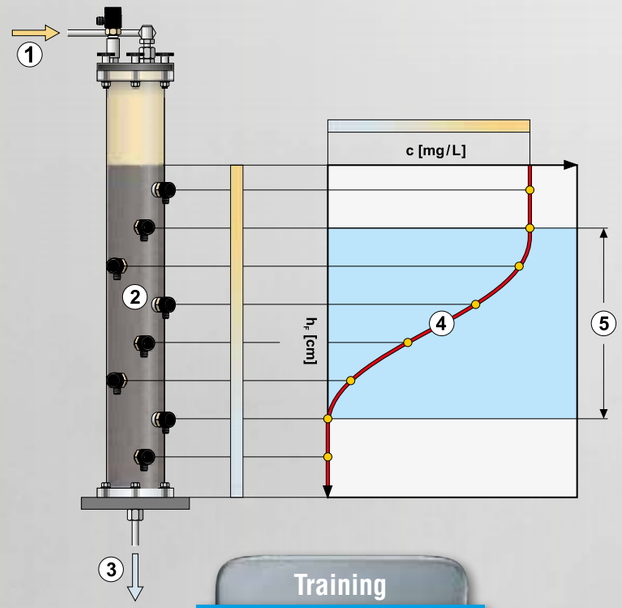

Plotting of concentration profiles with CE 583:
***1** raw water, **2** adsorber with sampling points,*
***3** treated water, **4** concentration profile,*
***5** mass transfer zone*

Training

If you require installation or training services, we will be glad to help.

THE INSTRUCTIONAL MATERIAL

We have compiled a comprehensive range of instructional material for the CE 583 which will greatly assist you in getting to know the system and in preparing your lessons and laboratory experiments and exercises.

The instructional material comprises

- detailed representation of the fundamentals
- description of the device
- detailed description of the experiments
- worksheets for the experiments
- performed reference experiments

Materials delivered as paper printouts in a folder and additionally as PDF files on a CD.

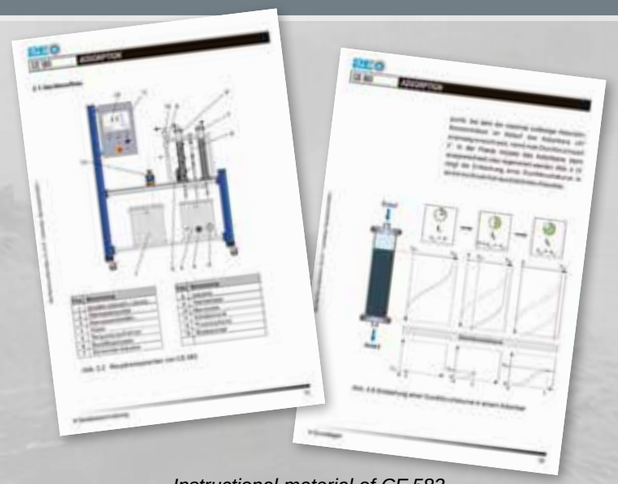

Instructional material of CE 583

CE 583 Adsorption

* **Adsorption of dissolved substances on activated carbon**
* **Concentration profiles and breakthrough curves**
* **Determination of the mass transfer zone**
* **Influence of the temperature and the contact time on adsorption**
* **Practical experiments in laboratory scale**

Technical Description

CE 583 demonstrates the removal of dissolved substances by adsorption. During adsorption the substances dissolved in the raw water are called adsorbate.

A pump transports the water from a tank in a circuit with two adsorbers filled with activated carbon. The pump transports treated water to the first adsorber. A concentrated adsorbate solution is added to the treated water flow using a metering pump. The raw water produced in this way enters the adsorber and flows through the activated carbon fixed bed. Here the adsorbate adsorbs on the activated carbon. To remove any quantities of adsorbate still present from the water, the water then flows through a second adsorber (safety adsorber). The treated water is returned to the feed line of the first adsorber where concentrated adsorbate solution is added once again. This creates a closed water circuit.

The flow rates of both pumps can be adjusted. Thereby the following parameters can be varied:
- concentration of the adsorbate in the raw water
- contact time of the raw water with the activated carbon

The water temperature can be controlled. This allows for the temperature effect of the adsorption to be investigated. Flow rate, temperature and pressure are continuously measured. Sampling points are arranged in such a way that breakthrough curves and concentration profiles can be plotted.

Analysis technology is required to evaluate the experiments. The choice of analysis technology depends on the adsorbate used. Methylene blue can e.g. be used as adsorbate. The concentration of methylene blue can be determined using a photometer.

The well-structured instructional material sets out the fundamentals and provides a step-by-step guide through the experiments.

Learning Objectives / Experiments

- recording of concentration profiles
- recording of breakthrough curves
- relationship between concentration profiles and breakthrough curves
- determining the mass transfer zone
- an adsorber's mass balance
- an adsorber's efficiency
- predicting breakthrough curves
- scale-up of the results to industrial scale
- detection of the following influencing factors
  * contact time
  * temperature
  * mode of operation

CE 583 Adsorption

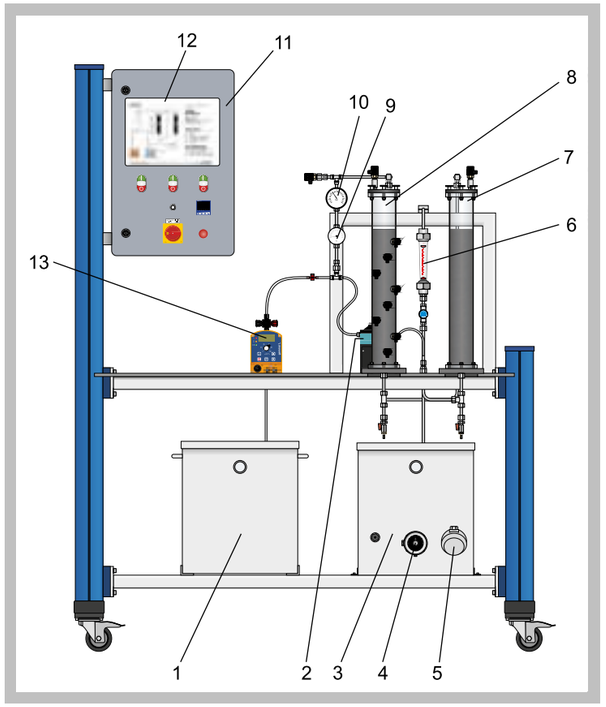

1 adsorbate solution tank, 2 circulation pump, 3 treated water tank, 4 heater, 5 temperature sensor, 6 flow meter, 7 safety adsorber, 8 adsorber, 9 thermometer, 10 manometer, 11 switch cabinet, 12 process schematic, 13 metering pump

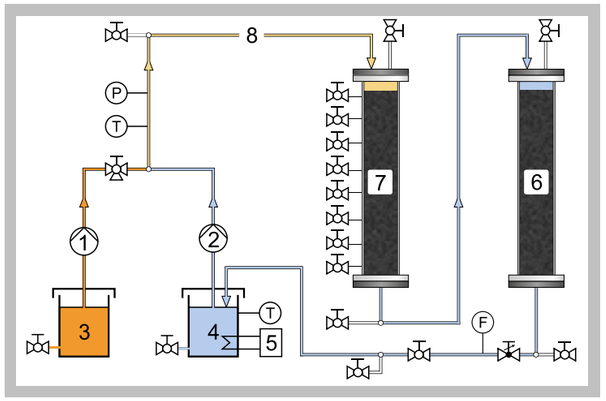

1 metering pump, 2 circulation pump, 3 concentrated adsorbate solution, 4 treated water, 5 heater, 6 safety adsorber, 7 adsorber, 8 raw water; F flow rate, P pressure, T temperature

Specification

[1] 2 adsorbers with activated carbon filling
[2] adsorber with 8 sampling points
[3] safety adsorber for closed water circuit
[4] continuous process
[5] metering pump for concentrated adsorbate solution
[6] pump for recirculating the treated water
[7] water temperature control
[8] digital temperature indication
[9] flow rate adjustable
[10] change of adsorbate concentration and contact time

Technical Data

Adsorber and safety adsorber
- inside diameter: each 60mm
- height: each 600mm
- capacity: each 1700cm³

Tanks
- treated water: 45L
- adsorbate solution: 45L

Circulation pump
- max. flow rate: 180L/h
- max. head: 10m

Metering pump
- max. flow rate: 2,1L/h
- max. head: 160m

Heater
- max. power: 500W

Measuring ranges
- flow rate: 0...60L/h
- temperature: 0...60°C
- pressure: 0...2,5bar

Dimensions and Weight

LxWxH: approx. 1500x790x1900mm
Weight: approx. 180kg

Required for Operation

230V, 50/60Hz, 1 phase or 120V, 60Hz/CSA, 1 phase
Water connection, drainage,
methylene blue (recommendation)

Scope of Delivery

1 trainer
1 packing unit of activated carbon
1 set of test tubes
1 set of tools
1 set of instructional material

Order Details

083.58300 CE 583 Adsorption

BASIC KNOWLEDGE

CRYSTALLISATION

Crystallisation is a unit operation in thermal process engineering, and is mainly used for separation and cleaning but also for shaping substances. A characteristic feature of crystallisation is the formation of a new solid phase (crystallisate). The crystallisate can develop from a solution, a liquefied material or vapour. In industrial process and chemical engineering, the main focus is on technical mass crystallisation from liquid phases, particularly solutions. Crystallisation plays a crucial role in the production of crystalline bulkgoods such as sugar, cooking salt and fertilisers from aqueous solutions.

A solvent (e.g. water) is able to dissolve a certain quantity of a material (salt) at a fixed temperature. As long as the solvent's maximum capacity to absorb the dissolved substance (saturation concentration) is not reached, there is only a single liquid phase. If the saturation concentration is exceeded, the dissolved substance begins to crystallise. This results in a second, solid phase – the crystallisate.

Crystallisation can be achieved using three unit operations:

- **Cooling crystallisation**
If solubility is highly dependent on temperature, the saturation concentration of the solute can be exceeded by cooling.

- **Evaporation crystallisation**
Part of the solvent is evaporated until the dissolved quantity of material in the remaining solution exceeds the saturation concentration. This unit operation is used if solubility is only slightly dependent on temperature.

- **Vacuum crystallisation**
This unit operation uses a combination of the effects described before. Relaxation in a vacuum evaporates part of the solution. The removal of the latent heat of evaporation has a cooling effect on the solution. This unit operation is particularly beneficial for temperature-sensitive substances as evaporation in a vacuum occurs at lower temperatures.

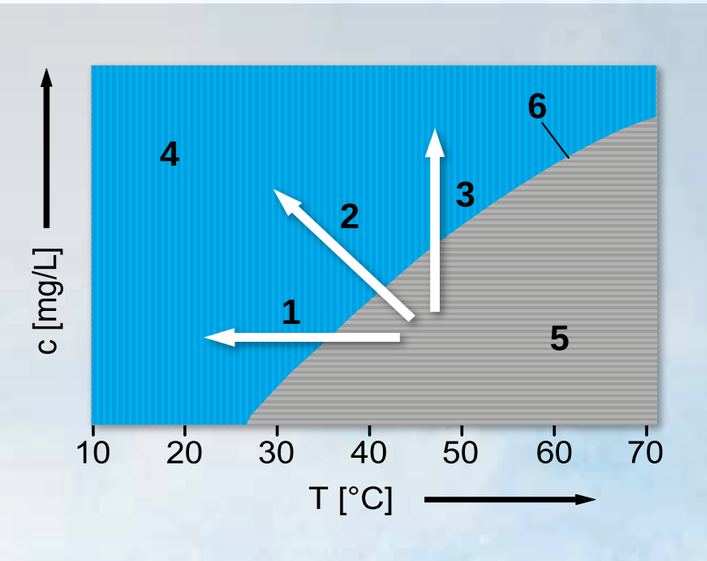

Simplified illustration of crystallisation unit operations in temperature/solubility diagram:
***T** temperature, **c** dissolved material, **1** cooling crystallisation, **2** vacuum crystallisation, **3** evaporation crystallisation, **4** oversaturated solution, **5** undersaturated solution, **6** solubility curve*

BASIC KNOWLEDGE

MEMBRANE SEPARATION PROCESSES

Compared to filtration, membrane separation processes remove much smaller substances, such as viruses and dissolved ions, from the water. The driving forces of the separation process are differences in concentration or pressure between the two sides of the membrane. The following membrane separation processes are used in water treatment:

1. Microfiltration
2. Ultrafiltration
3. Nanofiltration
4. Reverse osmosis

The pressure difference – the so-called transmembrane pressure – increases in the sequence indicated above. At the same time the separation limit – that is, the size of the smallest separable substances – decreases. The treated water is termed permeate, and the retained portion of the raw water is retentate.

Reverse osmosis

Reverse osmosis is particularly important. This unit operation enables high purity water to be produced. It is widely used for many different processes in industry and for desalination of sea water.

To understand the reverse osmosis, the osmosis first has to be explained by an example (figure). Two salt solutions with differing concentrations are separated by a semi-permeable membrane. The membrane is only permeable to water molecules. In trying to equalise concentrations on either side, water flows from left to right through the membrane. The water level rises on the right side until a state of equilibrium is established, the – so called – osmotic equilibrium. The same salt concentration now prevails on both sides of the membrane. The resultant hydrostatic pressure difference between the two sides of the membrane is termed the osmotic pressure.

To reverse the direction of flow of the water (reverse osmosis), the osmotic pressure must be overcome. To do so, a pressure greater than the osmotic pressure is applied to the right side of the membrane. The water then flows from right to left through the membrane. The retentate is produced on the right hand side, and the permeate on the left. In the applications mentioned transmembrane pressures up to 100 bars can be required.

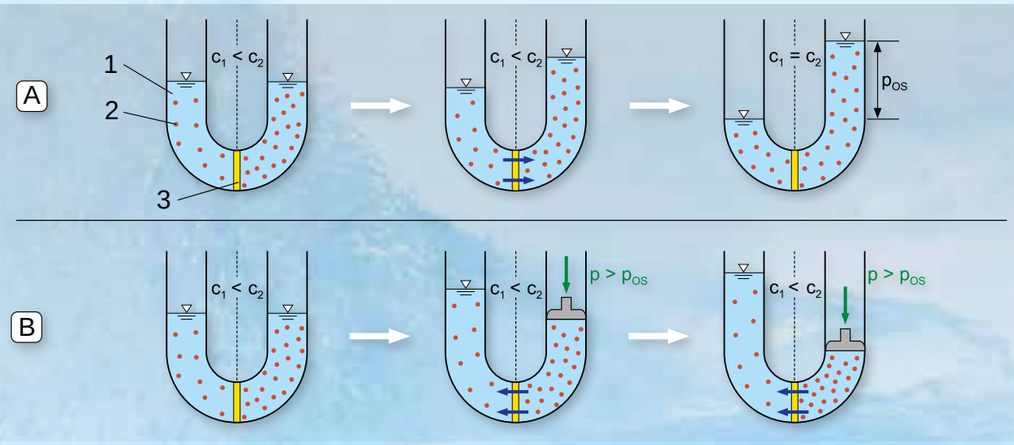

Fundamental principle of osmosis (A) and reverse osmosis (B):
***1** water, **2** salt ions, **3** semi-permeable membrane, **p** pressure, p_{OS} osmotic pressure,*
c_1 salt concentration on the left side of the membrane, c_2 salt concentration on the right side of the membrane

CE 520 Cooling Crystallisation

*** Crystallisation from solutions**

*** Investigation of crystal growth in a fluidised bed**

*** Transparent materials for observation of processes**

Technical Description

Crystallisation enables dissolved substances from solutions to be transformed into a solid and separated.

This trainer has been developed in cooperation with the **Chair of the Thermal Process Technology at the Martin-Luther University, Halle-Wittenberg (Prof. Dr. Ulrich).**

A pump delivers a saturated potassium sulphate solution in a circuit with a tank. To prevent premature crystallisation, the solution is heated above saturation temperature using a heating circuit. Both circuits are connected by two heat exchangers. A small amount of this undersaturated solution is fed through the crystallisation cell as a bypass. To crystallise this part of the solution, it is cooled by cooling water using two heat exchangers. Reducing the temperature converts the solution into an oversaturated, metastable state.

The crystallisation cell is a tube fitted with porous filter media at both the inlet and outlet. The removable cell can be opened to allow the addition of seed crystals. The porous filter media are selected in a way that the crystals can't escape from the cell. The flow conditions cause a fluidised bed in the cell. The dissolved potassium sulphate crystallises out of the metastable solution at the seed crystals. The crystals grow. The growth rate can be determined by weighing the crystals before and after the experiment and by measurement of time.

A stirred tank with heat exchanger is available to prepare a saturated potassium sulphate solution. The temperatures in the two tanks and the temperature required in the bypass for crystallisation are recorded and controlled using sensors.

A drying chamber, a balance, a screening machine and a microscope are recommended for evaluating the experiments. Potassium sulphate is not included.

The well-structured instructional material sets out the fundamentals and provides a step-by-step guide through the experiments.

Learning Objectives / Experiments

- fundamental principle of cooling crystallisation
- investigation of the factors influencing crystal growth
  * oversaturation
  * saturation time

CE 520 Cooling Crystallisation

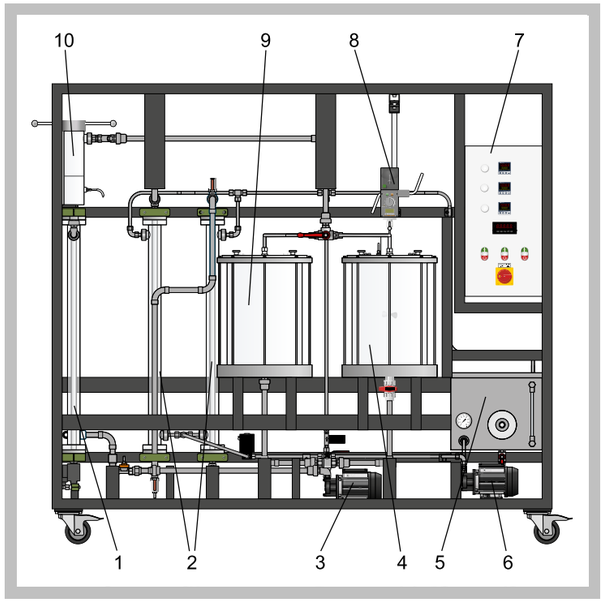

1 heat exchanger for cooling, 2 heat exchanger for heating, 3 solution pump, 4 tank for preparation of saturated solution, 5 tank with heater and thermostat, 6 heating circuit pump, 7 switch cabinet, 8 stirring machine, 9 tank for undersaturated solution, 10 crystallisation cell

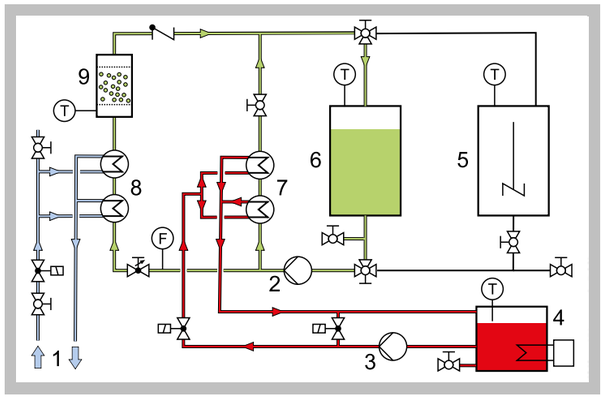

1 external cooling water, 2 solution pump, 3 heating circuit pump, 4 tank with heater and thermostat, 5 stirred tank for preparation of saturated solution, 6 tank for undersaturated solution, 7 heat exchanger for heating, 8 heat exchanger for cooling, 9 crystallisation cell;
T temperature, F flow rate

Specification

[1] crystallisation from solutions in fluidised bed
[2] stirred tank for preparation of a saturated solution
[3] circuit for undersaturated solution with tank, 2 heat exchangers for heating and pump
[4] bypass for oversaturated solution with crystallisation cell and 2 heat exchangers for cooling
[5] removable and fillable crystallisation cell, PMMA
[6] heating circuit with pump, tank, heater and thermostat
[7] adjustment of flow rate in bypass using valves
[8] measurement and control of temperatures in stirred tank, tank for undersaturated solution and in crystallisation cell

Technical Data

Tanks
- stirred tank: approx. 25L
- for undersaturated solution: approx. 25L
- heating circuit: approx. 32L

Pump (solution)
- max. flow rate: approx. 21L/min
- max. head: approx. 38m

Pump (heating circuit)
- max. flow rate: approx. 6L/min
- max. head: approx. 9m

Crystallisation cell
- diameter: approx. 40mm
- height: approx. 80mm

Heater power output: approx. 2kW

Measuring ranges
- temperature: 3x 0...100°C, 1x 0...80°C
- flow rate: 1x 0...12L/min

Dimensions and Weight

LxWxH: 2000x800x1850mm
Weight: approx. 255kg

Required for Operation

230V, 50Hz, 1 phase or 230V, 60Hz/CSA, 3 phase
Cold water connection required: min. 3bars; max. 15°C

Scope of Delivery

1 trainer
1 hose
1 set of tools
1 set of instructional material

Order Details

083.52000 CE 520 Cooling Crystallisation

G.U.N.T Gerätebau GmbH, Hanskampring 15-17, D-22885 Barsbüttel, Phone +49 (40) 67 08 54-0, Fax +49 (40) 67 08 54-42, E-mail sales@gunt.de, Web http://www.gunt.de
We reserve the right to modify our products without any notifications.

CE 530 Reverse Osmosis

The illustration shows: supply unit (left) and trainer (right)

*** Membrane separation process for obtaining solvent from a salt solution**

*** Spiral wound membrane module for separation**

*** Example application: sea water desalination**

Technical Description

This trainer has been developed in cooperation with the **Institute for Thermal Process Engineering at the TU Hamburg-Harburg**. A solution of NaCl in a defined concentration is mixed in a tank complete with a stirring machine. A pump delivers the solution to the spiral wound membrane module. The pump generates the necessary pressure for separation.

The spiral wound membrane module consists of multiple membrane envelopes. A membrane envelope is made up of two membranes with a porous spacer between them. The membrane envelope is sealed on three sides and on its fourth, open, side is connected to the perforated permeate collecting tube. There are other spacers between the envelopes to ensure axial flow of the salt solution. The spacers together with the membrane envelopes are wound spirally around the permeate collecting tube. The salt solution arrives at the front face of the module and flows axially between the envelopes. The semi-permeable membrane is permeable to water (permeate) but not to dissolved NaCl. The applied pressure forces the water through the membrane into the envelopes. In the envelopes the water flows spirally towards the permeate collecting tube and exits the module in an axial direction. As a result of the water being removed, the solution is concentrated as it travels through the module. It exits the module as retentate and is returned to the raw water tank.

The permeate is collected in a separate tank. Another tank containing distilled water is provided to flush through the spiral wound membrane module.

The pressure and flow rate can be adjusted by valves. In order to check the success of the separation, salt concentrations in the raw water, retentate and permeate are recorded by measuring the respective conductivity values.

The well-structured instructional material sets out the fundamentals and provides a step-by-step guide through the experiments.

Learning Objectives / Experiments

- assembly, cleaning and conservation of membrane modules
- fundamental principle of reverse osmosis
  * Van't Hoff's law
- permeate flow rate and retention dependent on
  * pressure
  * salt concentration in raw water
  * yield
- determination of diffusion coefficients

CE 530 Reverse Osmosis

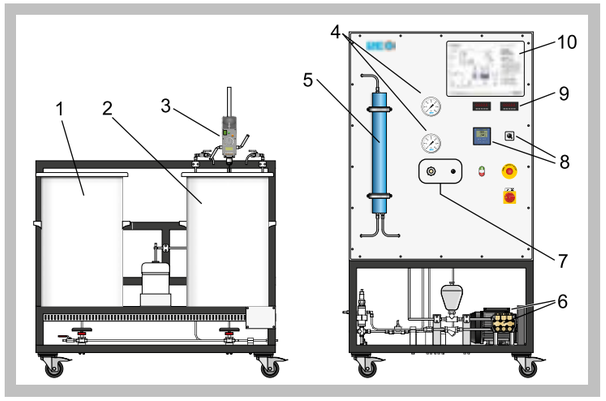

1 tank for distilled water, 2 raw water tank, 3 stirring machine, 4 manometer, 5 spiral wound membrane module, 6 pump with motor, 7 valves, 8 conductivity display and selector, 9 flow rate display, 10 process schematic

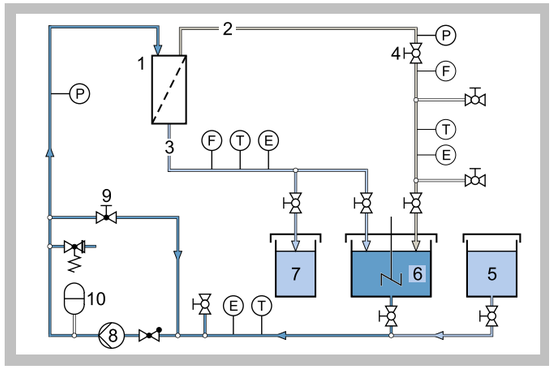

1 spiral wound membrane module, 2 retentate, 3 permeate, 4 retentate valve, 5 distilled water, 6 raw water (salt solution), 7 permeate, 8 pump, 9 overflow valve, 10 pulsation damper; P pressure, F flow rate, T temperature, E conductivity

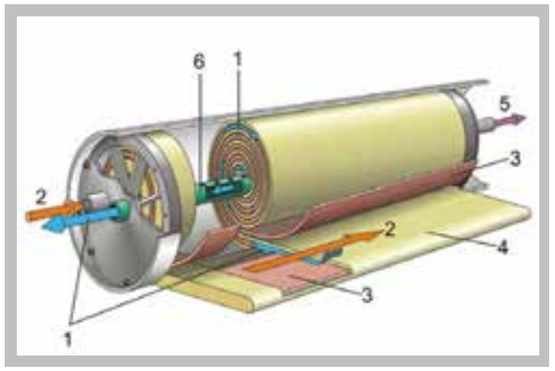

Spiral wound membrane module: 1 permeate, 2 raw water, 3 spacer, 4 membrane envelope, 5 retentate, 6 permeate collecting tube

Specification

[1] removal of solvent from a salt solution using reverse osmosis
[2] polyamide spiral wound membrane module
[3] piston pump with pulsation damper for pressure generation
[4] overflow valve to adjust the pressure upstream of the membrane module
[5] valve to adjust the retentate flow rate
[6] raw water tank with stirring machine to prepare a salt solution
[7] tank for distilled water to flush through the spiral wound membrane module
[8] tank to collect the permeate
[9] safety cutout to protect the pump against dry running

Technical Data

Spiral wound membrane module
- active area: 1,2m²
- raw water flow rate: max. 23L/min
- length: approx. 500mm
- diameter: approx. 60mm

Piston pump
- max. flow rate: approx. 425L/h
- max. head: approx. 700m

Max. operating pressure: 60bar

Stirring machine
- power consumption: 140W
- speed: 30...1000min^{-1}

Tanks
- raw water (salt solution): approx. 110L
- distilled water: approx. 110L
- permeate: approx. 5L

Measuring ranges
- retentate flow rate: 0,2...6,0L/min
- permeate flow rate: 0,05...1,8L/min
- temperature: 3x 0...50°C
- pressure: 2x 0...120bar
- conductivity: 3x 0...200mS/cm

Dimensions and Weight

LxWxH: 1250x1050x2100mm (trainer)
LxWxH: 1500x1050x1400mm (supply unit)
Weight: approx. 290kg (in total)

Required for Operation

230V, 50/60Hz, 1 phase or 120V, 60Hz, 1 phase
Water connection, drainage, sodium chloride, distilled water, sodium disulfite (conservation of the membrane module), caustic soda, hydrochloric acid

Scope of Delivery

1 trainer, 1 supply unit, 1 membrane, 1 conservation tank, 1 set of tools, 1 set of hoses, 3 conductivity sensors
1 set of instructional material

Order Details

083.53000 CE 530 Reverse Osmosis

2E a division of G.U.N.T Gerätebau GmbH, P.O.Box 1125, D-22885 Barsbüttel, t +49 (40)67 08 54-0, f +49 (40)67 08 54-42, E-mail sales@gunt.de
We reserve the right to modify our products without any notifications. Visit our Websites: www.gunt.de | www.gunt2e.de

BASIC KNOWLEDGE

LIQUID-LIQUID EXTRACTION

Liquid-liquid extraction involves using a liquid solvent to remove a liquid component from a liquid mixture. The component dissolves preferably in the solvent. Applications of this process include removal of vitamins from aqueous solutions and aromatic compounds from crude oil fractions.

In the simplest case, three components are involved:

- transition component A
- solvent B
- carrier liquid C

The transition component A is combined with the carrier liquid C as the initial mixture (feed). If the initial mixture and the solvent B are mixed together, the transition component A is transferred into the solvent B. The requirement for this is that the solubility of the transition component A in the solvent B is higher than in the carrier liquid C. In turn, the carrier liquid C should be almost insoluble in the solvent B.

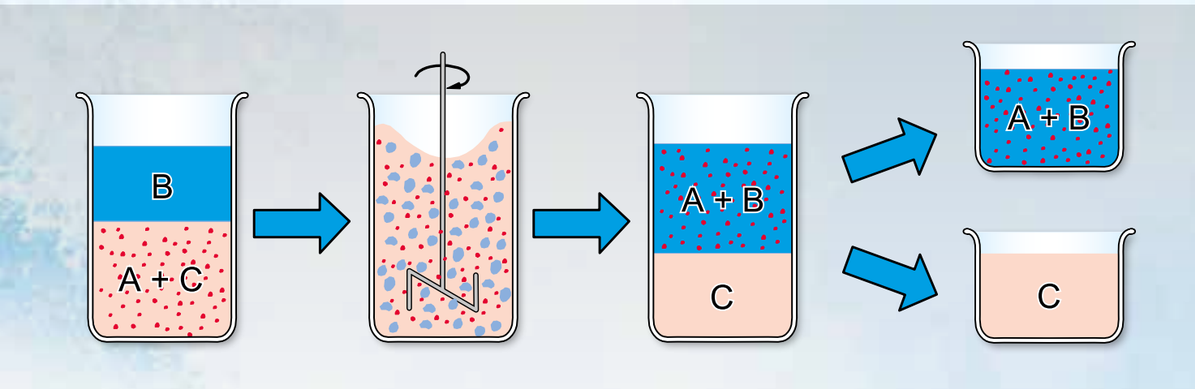

Ideal extraction:
*When the initial mixture **(A+C)** and the solvent **(B)** are mixed, the transition component **(A)** is transferred into the solvent. After settling, two phases are obtained: the extract **(A+B)** and the carrier liquid **(C)**.*

The example illustration assumes an ideal situation in which the transition component A is completely taken up by the solvent. In reality, residual transition component always remains in the carrier liquid. In addition, complete insolubility of the carrier liquid in the solvent is assumed. In practice, parts of one substance will always be found in the other.

This means that the actual separation process results in two phases after settling:

- **Extract phase** (mainly A and B, with residue of C)
- **Raffinate phase** (mainly C, with residue of A and B)

To obtain the purest possible transition component, the extraction is normally followed by a separating stage that takes the form of rectification, in which the solvent is separated from the transition component. The solvent can be recirculated and is then available for the extraction again.

BASIC KNOWLEDGE

SOLID-LIQUID EXTRACTION

Solid-liquid extraction allows soluble components to be removed from solids using a solvent. Applications of this unit operation include obtaining oil from oil seeds or leaching of metal salts from ores.

An everyday example is the preparation of coffee. Here, water (solvent) is used to remove the coffee flavours (transition component) from the coffee powder (extraction material, consisting of solid carrier phase and transition component). Ideally, this results in drinkable coffee (solvent with dissolved flavours), with the completely depleted coffee grounds (solid carrier phase) remaining in the coffee filter.

In reality, the solid carrier phase will still contain some transition component after completion of the extraction. In addition, some of the solvent will still be adsorptively bonded to the solid carrier phase.

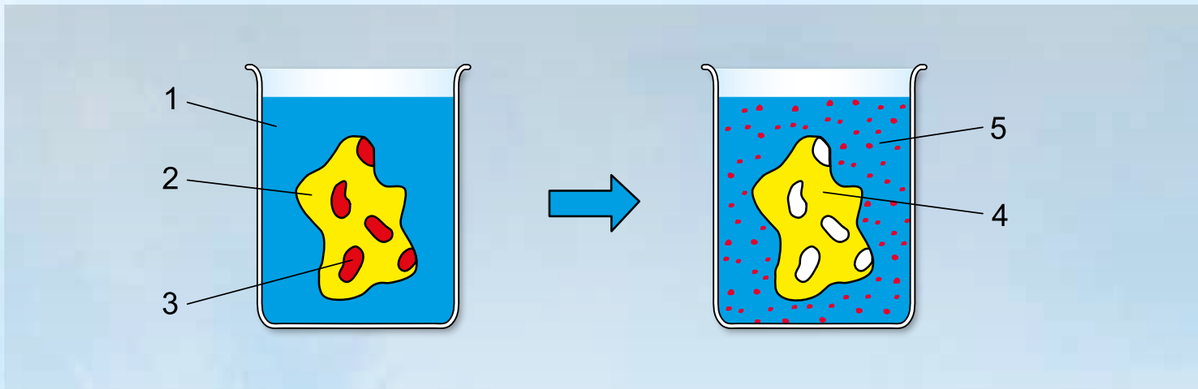

Schematic extraction – before extraction (left) and after extraction (right):
***1** solvent, **2** extraction material (solid carrier phase with transition component), **3** transition component, **4** depleted solid carrier phase, **5** solvent with dissolved transition component*

To achieve the fastest and most complete solid extraction possible, the solvent must be provided with large exchange surfaces and short diffusion paths. This can be done by pulverising the solid to be extracted. However, an excessively small grain size can cause agglutination and make it more difficult for the solvent to permeate.

In the simplest form of this unit operation, the extraction material and the solvent are mixed well. The solvent and the dissolved transition component are then removed and regenerated.

The extraction material can also take the form of a fixed bed with the solvent flowing through it. In a further form of the application, the extraction material is led through the solvent.

The solvent is normally regenerated using evaporation / distillation. The solvent is evaporated and a concentrated extract solution is left behind as the product. The solvent is condensed and can then be reused.

CE 620 *Liquid-Liquid Extraction*

* **Separation of a liquid mixture by liquid-liquid extraction in counterflow operation**
* **Enrichment of extract using integrated distillation column**
* **Operation in either continuous or discontinuous process mode is possible**
* **Design and materials allow investigation of different ternary systems**
* **Adjustment and observation of phase boundary possible**

Technical Description

The CE 620 allows liquid mixtures to be separated using liquid-liquid extraction.

The liquid mixture to be separated is delivered from the feed tank into the bottom of the extraction column using a pump. There, it moves in counterflow towards the solvent, which is delivered into the top of the extraction column by a pump. The mixture to be separated is made up of a transition component and carrier liquid. The carrier liquid and the solvent are insoluble in one another and therefore a phase boundary is established in the column. This can be observed and can be adjusted using two valves. The movement of the transition component from the carrier liquid into the solvent occurs inside the column. Two three-way valves can be used to operate the trainer as a continuous or a discontinuous process.

A distillation unit facilitates the enrichment of the transition component in the extract. This consists of a heated round-bottomed flask with a packed column and a distillation bridge with Liebig condenser. The enriched extract leaves the column at the top and is collected in a tank. The bottom temperature is measured by a sensor, displayed digitally and controlled using a PID controller. The temperature at the top of the distillation column is also measured. Distillation removes the solvent from the transition component which is collected at the bottom of the unit and can be drawn off as a product. The separated solvent is collected in a tank and can be reused for extraction.

For a ternary material system, rapeseed oil is recommended as the carrier liquid with ethanol as the transition component and water as the solvent. For this ternary material system the concentrations of extract, top and bottom product are determined by measurement of density. A conductivity meter is included for alternative ternary material systems.

The well-structured instructional material sets out the fundamentals and provides a step-by-step guide through the experiments.

Learning Objectives / Experiments

- transition of a component from a two-component liquid mixture into a solvent by extraction
- scale-up from beaker experiment to pilot plant scale
- enrichment of transition component in extract by distillation
- evaluation of separation processes via concentration measurement and mass balances
- influence of different experimental options on separation processes

CE 620 *Liquid-Liquid Extraction*

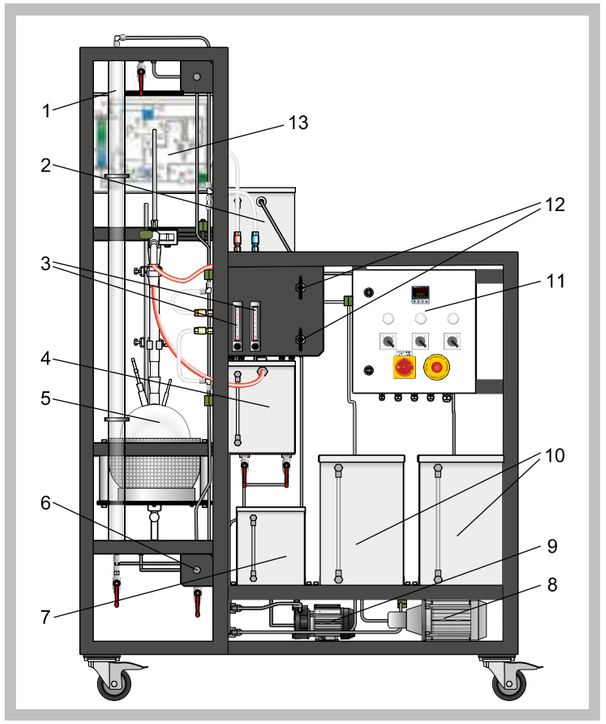

1 extraction column, 2 extract tank, 3 flow meters feed and solvent, 4 top product tank (distillation), 5 distillation unit, 6 valve for phase boundary, 7 solvent tank, 8 feed pump, 9 solvent pump, 10 feed and raffinate tank, 11 switch cabinet, 12 three-way valves, 13 process schematic

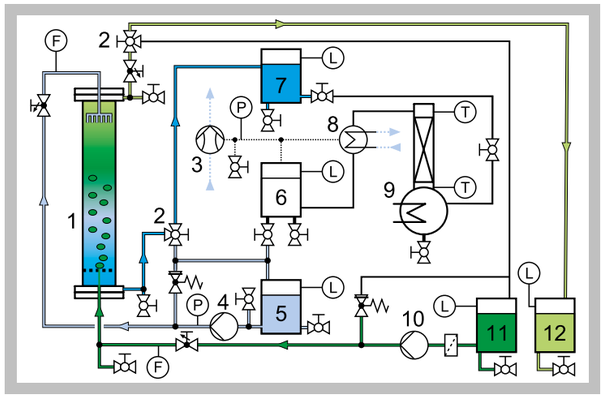

1 extraction column, 2 three-way valves, 3 water jet pump, 4 solvent pump, 5 solvent tank, 6 top product tank (distillation), 7 extract tank, 8 Liebig condenser with cooling water connection, 9 distillation column, 10 feed pump, 11 feed tank, 12 raffinate tank; F flow rate, P pressure, T temperature, L level

Specification

[1] liquid-liquid extraction in counterflow operation with distillation for enrichment of the extract
[2] operation as continuous or discontinuous process using 2 three-way valves
[3] glass extraction column
[4] distillation column and distillation bridge with Liebig condenser
[5] electrical bottom heating via PID controller
[6] water jet pump for reduction of evaporation temperature during distillation
[7] stainless steel tanks for feed, solvent, raffinate, extract and top product (distillation)
[8] 2 pumps to deliver the feed and solvent
[9] 2 valves for adjusting the phase boundary
[10] distillation column packed with Raschig rings

Technical Data

Columns
- extraction: diameter: 40mm, height: 1.500mm
- distillation: diameter: 30mm, height: 415mm

Bottom heater power output: 1200W
Tanks
- feed and raffinate: approx. 30L each
- solvent and extract: approx. 15L each
- top product (distillation): 15L
- bottom tank (distillation): approx. 5L

Feed pump
- max. flow rate: 1000ml/min
- max. head: 80m

Solvent pump
- max. flow rate: 1200ml/min
- max. head: 10m

Water jet pump: final vacuum: approx. 200mbar
Measuring ranges
- temperature: 1x 0...150°C, 1x 0...120°C
- flow rate: 2x 100...850ml/min (water)
- pressure: -1...0,6bar
- conductivity:0...1990µS/cm

Dimensions and Weight

LxWxH: 1350x750x2150mm
Weight: approx. 180kg

Required for Operation

230V, 50/60Hz, 1 phase or 120V, 60Hz/CSA, 1 phase
Water connection: 720L/h

Scope of Delivery

1 trainer
2 glass cylinders
1 measuring cup
1 stirrer
1 conductivity meter
1 set of hoses
1 set of instructional material

Order Details

083.62000 CE 620 Liquid-Liquid Extraction

G.U.N.T Gerätebau GmbH, Hanskampring 15-17, D-22885 Barsbüttel, Phone +49 (40) 67 08 54-0, Fax +49 (40) 67 08 54-42, E-mail sales@gunt.de, Web http://www.gunt.de
We reserve the right to modify our products without any notifications.

CE 630 Solid-Liquid Extraction

* **Discontinuous and continuous solid-liquid extraction**
* **1-, 2- or 3-stage modes possible**
* **Regenerable extraction material**
* **GUNT software with control functions and data acquisition**

Technical Description

The CE 630 allows a soluble component of a solid mixture to be extracted with a revolving extractor.

In continuous 3-stage mode, pure solvent (distilled water) is delivered from a tank to the sprinkler of the first extraction stage where it is distributed over the solid mixture (extraction material). The solvent seeps through the extraction material, absorbs its soluble components (potassium hydrogen carbonate) and passes into the collecting segments. From there, the enriched solvent is delivered to the sprinkler of the next stage. After passing through the last stage, the extract (the solvent charged with the extracted component) is collected in the extract tank. The extraction material is continuously fed into the cells of the rotating extractor by a spiral conveyor. The extraction material and the solvent move in counterflow. The extraction residue drops into a tank after one revolution of the extractor.

Valves can be used to switch to 1- or 2-stage continuous mode. Discontinuous mode is possible with the extractor stopped.

Three pumps are available for delivering the solvent. Their speed can be individually adjusted for each stage. The temperature of the solvent can likewise be adjusted for each stage with PID controllers. Each stage is equipped with conductivity sensors to monitor the separation process. All measured values can be viewed by software.

The solid mixture (extraction material) is produced prior to the extraction experiment. The carrier material (granular aluminium oxide) is fed into a salt solution (potassium hydrogen carbonate dissolved in water). The carrier material soaked with the salt solution is then dried.

The well-structured instructional material sets out the fundamentals and provides a step-by-step guide through the experiments.

Learning Objectives / Experiments

- fundamentals of solid-liquid extraction
- demonstration of solid-liquid extraction as a continuous and discontinuous process
- investigation of 1-, 2- and 3-stage processes
- influence of solvent flow rate and temperature on the extraction process
- influence of extraction material feed rate and extractor revolving speed on the extraction process

CE 630 Solid-Liquid Extraction

1 process schematic, 2 spiral conveyor for extraction material, 3 revolving extractor, 4 revolving extractor drive unit, 5 pump (behind the tanks), 6 tank, 7 mode selector valves, 8 heater and solvent feed, 9 switch cabinet with controls

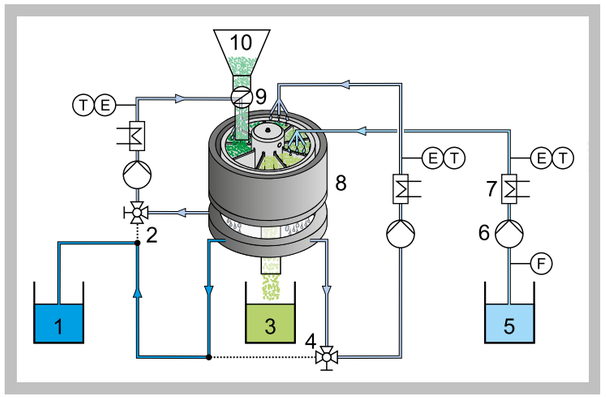

1 extract, 2 connection for 2-stage mode, 3 extraction residue, 4 connection for single-stage mode, 5 solvent, 6 pump, 7 heater, 8 revolving extractor, 9 spiral conveyor, 10 extraction material; T temperature, E conductivity, F flow rate

Specification

[1] revolving extractor for continuous and discontinuous solid-liquid extraction
[2] switching to 1-, 2- or 3-stage modes possible by valves
[3] extractor revolving speed adjustable by potentiometer
[4] spiral conveyor with variable speed to adjust the extraction material feed rate
[5] flow rate of solvent adjustable for each stage via speed of pumps
[6] temperature of solvent adjustable for each stage by PID controller
[7] tanks for extraction material, extraction residue, solvent and extract
[8] GUNT software for data acquisition via USB under Windows Vista or Windows 7

Technical Data

Extractor
- 9 cells
- rotor diameter: approx. 200mm
- speed: approx. 0...9h^{-1}
- motor power consumption: approx. 0,9W

Spiral conveyor
- max. feed rate: approx. 20L/h
- motor power consumption: approx. 4W

4 peristaltic pumps
- max. flow rate: approx. 25L/h at 300min^{-1} and hose 4,8x1,6mm

3 heaters
- power consumption: approx. 330W

Tanks
- extraction material: approx. 5L
- extraction residue, solvent, extract: each approx. 20L

Measuring ranges
- flow rate: 1x 0,025...0,5L/min
- conductivity: 4x 0...20mS/cm
- temperature: 4x 0...50°C

Dimensions and Weight

LxWxH: 1360x780x1900mm
Weight: approx. 150kg

Required for Operation

230V, 50/60Hz, 1 phase or 120V, 60Hz/CSA, 1 phase

Scope of Delivery

1 trainer
1 set of tools
1 hose
1 GUNT software CD + USB cable
1 packing unit of aluminium oxide
1 packing unit of potassium hydrogen carbonate
1 set of instructional material

Order Details

083.63000 CE 630 Solid-Liquid Extraction

5 CHEMICAL PROCESS ENGINEERING

INTRODUCTION

Overview	The GUNT Learning Concepts of Chemical Process Engineering	328

THERMAL ACTIVATION

Overview	CE 310 – The Modular System for Chemical Process Engineering	330
CE 310	Supply Unit for Chemical Reactors	332
CE 310.01	Continuous Stirred Tank Reactor	334
CE 310.02	Tubular Reactor	336
CE 310.03	Stirred Tanks in Series	338
CE 310.04	Discontinuous Stirred Tank Reactor	340
CE 100	Tubular Reactor	342

CATALYTIC AND PHOTOCHEMICAL ACTIVATION

Overview	Basic Knowledge Catalytic Activation	344
Overview	Basic Knowledge Photochemical Activation	345
CE 380	Fixed Bed Catalysis	346
CE 380.01	Flow Injection Analysis	348
CE 584	Advanced Oxidation	350

Activation methods and reactor types in chemical process engineering

This chapter presents suitable experimental units to study important activation methods in chemical process engineering. The programme also offers a variety of options to learn about the operating principle, application areas and differences of common reactor types. When selecting the reactions, we made sure that the products can be easily verified and that the chemicals used are as non-hazardous as possible. Nevertheless, handling chemicals requires experience, care and a suitable laboratory environment. Depending on the process and the substances used, sealed floors, drainage systems, water supply, ventilation, secure storage facilities for the substances used, safety devices and protective clothing are required.

For the analysis of many experiments you will need professional analysis systems. These are not included in the scope of delivery of the GUNT training systems.

Please contact us. We will be happy to give advise.

Visit our website www.gunt.de

THE GUNT LEARNING CONCEPTS OF CHEMICAL PROCESS ENGINEERING

WHAT DOES CHEMICAL PROCESS ENGINEERING DEAL WITH?

Unlike in mechanical or thermal process engineering, the focus of chemical process engineering is not to change substance properties or the composition of a substance. The central subject of chemical process engineering is the creation of a new substance type through chemical reaction.

The knowledge which reacting agents are required for a desired product comes from chemistry. Chemistry also provides the knowledge of the conditions that enable a smooth chemical reaction process.

These conditions include the activation of the reaction, pressure and temperature adjustment and the composition of the reacting agents. The aim of chemical process engineering is to create these conditions for industrial-scale use. In addition to these conditions, the aggregate state of the reacting agents and reaction products also has a significant influence on the design of the reactors and the overall production process.

HOW CAN THE CHEMICAL PROCESSES BE CLASSIFIED?

There are several ways of classifying chemical processes. One of them is based on activation energy. Many thermodynamically possible chemical reactions do not take place at all or are too slow for technical applications unless a certain activation energy is applied.

Chemical reactions can be activated in different ways. The activation method significantly influences the design and operation of chemical reactors. It is also possible to combine different activation methods:

Supply Unit for Chemical Reactors CE 310 with Stirred Tanks in Series CE 310.03

- **Thermal activation**
  The energy required to activate the chemical reaction can be applied through heat. The desired temperature range is achieved by heating or cooling. In this temperature range, the reaction conditions are optimal and undesired side reactions are avoided.
- **Catalytic activation**
  Many reactions are too slow for technical applications at ambient temperature because the required activation energy is very high. Catalysts lower the required activation energy and accelerate the chemical reaction. There are two types of catalysis:
  - **a) Homogeneous catalysis**
    The catalyst and the starting substances of the chemical reaction are in the same phase.
  - **b) Heterogeneous catalysis**
    The catalyst is in the solid phase in most cases. The starting substances of the reaction are in the liquid or gaseous phase.
- **Photochemical activation**
  The reaction is activated by atoms or molecules absorbing optical radiation. The mostly organic substances thus achieve a higher energy level and are activated.
- **Microbiological activation**
  The starting substances are converted by means of microorganisms, cells or enzymes. Due to the special requirements of these reactions, biological process engineering has become an independent discipline.

The chemical activation methods…		…and the appropriate GUNT unit
Thermal activation	▶	CE 310.01 *Continuous Stirred Tank Reactor*
	▶	CE 310.02 *Tubular Reactor*
	▶	CE 310.03 *Stirred Tanks in Series*
	▶	CE 310.04 *Discontinuous Stirred Tank Reactor*
	▶	CE 100 *Tubular Reactor*
Catalytic activation	▶	CE 380 *Fixed Bed Catalysis*
Photochemical activation	▶	CE 584 *Advanced Oxidation*
Microbiological activation	▶	*Biological Processes (▸ chapter 6)*

Abstract processes clearly illustrated

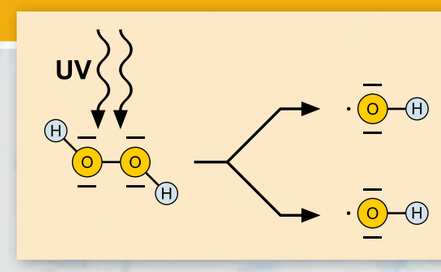

CE 380 *Fixed Bed Catalysis*

CE 584 *Advanced Oxidation*

CE 310 THE MODULAR SYSTEM FOR CHEMICAL PROCESS ENGINEERING

CONTINUOUS STIRRED TANK REACTOR

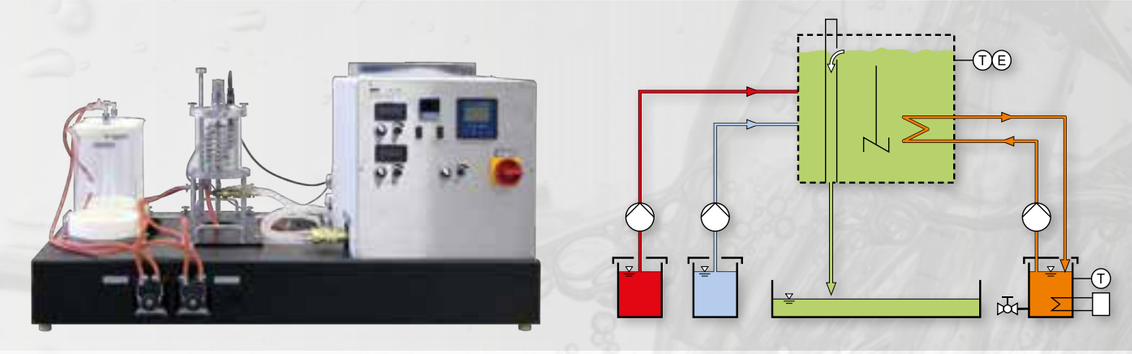

Supply Unit CE 310 with Continuous Stirred Tank Reactor CE 310.01

TUBULAR REACTOR

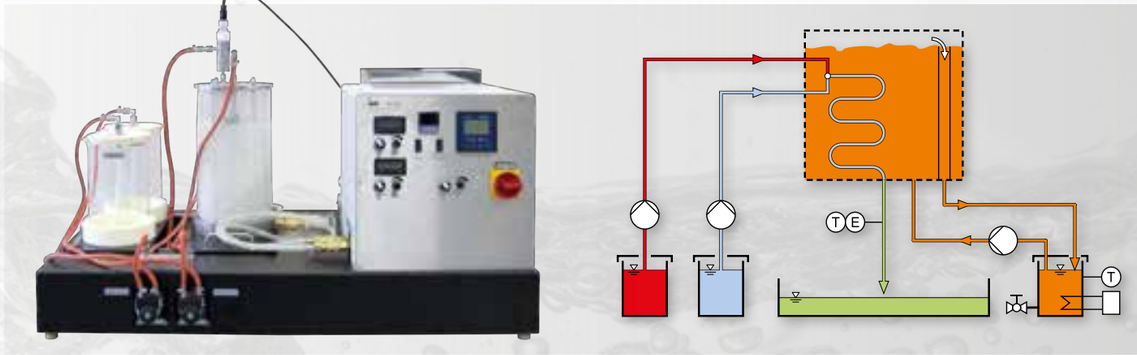

Supply Unit CE 310 with Tubular Reactor CE 310.02

CE 310 – One supply unit for all reactor types

The supply unit is equipped with all components that are required for operating the different reactors:

- tanks and pumps to supply the reactants
- collecting tank for the products
- measuring equipment to determine the product concentrations
- hot water circuit with heater to control the temperature in the reactor
- controls to adjust the stirrer speed and flow rates

Learning contents:

- design and operating principles of different reactor types
- application areas of the different reactor types
- conversion of substances depending on
  - reactor type
  - residence time in the reactor
  - temperature
- fundamentals of a saponification reaction

STIRRED TANKS IN SERIES

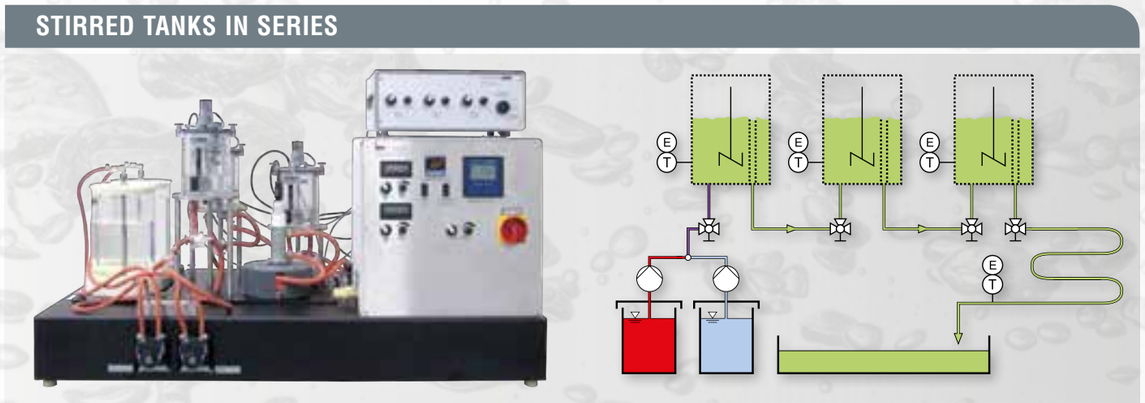

Supply Unit CE 310 with Stirred Tanks in Series CE 310.03

SOFTWARE FOR DATA ACQUISITION

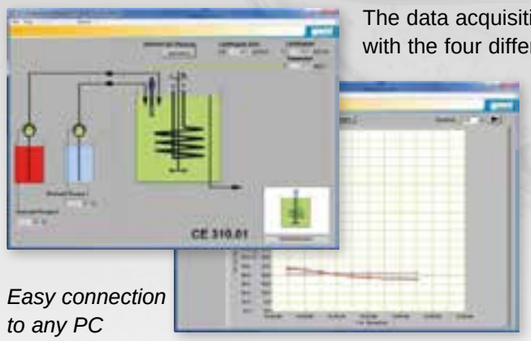

Easy connection to any PC or laptop via USB.

The data acquisition software supports the entire range of experiments with the four different reactor types.

Main features

- process schematic with display of the current measured data for each reactor type
- development of the conductivities over time as the measure for product concentration
- development of the temperature in the reactor over time
- comprehensive help function

DISCONTINUOUS STIRRED TANK REACTOR

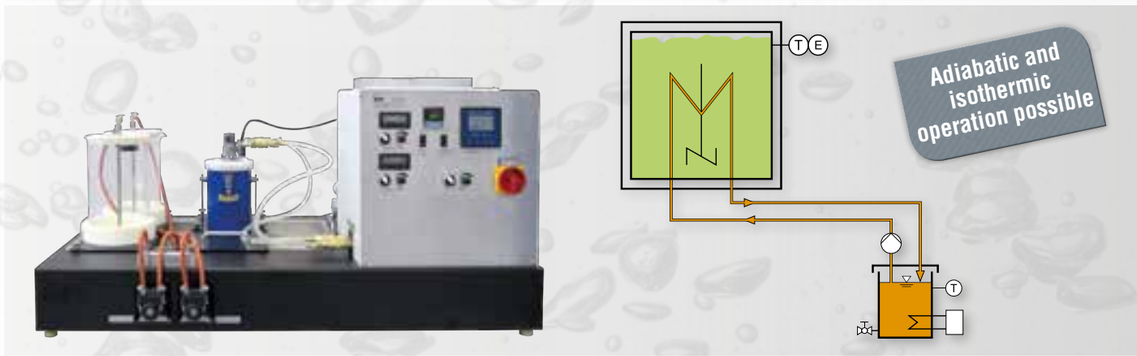

Supply Unit CE 310 with Discontinuous Stirred Tank Reactor CE 310.04

CE 310 Supply Unit for Chemical Reactors

*** Supply unit for various reactors (CE 310.01 - CE 310.04)**

*** Saponification reaction with conductivity measurement to determine the conversion**

Technical Description

The reactor is the core element of a chemical production facility. In the reactor, the starting substances (reactants) react with each other to form a new substance (product). The reactor has to guarantee the conditions for an optimal reaction process. This primarily concerns the temperature in the reactor. Different types of reactors are used, depending on the requirements.

CE 310 serves as a supply unit for four different reactors. The reactor to be examined is mounted onto the supply unit with knurled bolts. For continuous operation of the reactors, two tanks for the reactants are arranged on the trainer. The supply unit and the reactor are hydraulically connected via hoses. The hoses are equipped with quick-release couplings for easy attachment. Two pumps convey the two reactants into the reactor. The residence time of the reactants in the reactor can be adjusted via the pump speed. In the reactor, the reactants react to form a product. An additional tank for the product is provided underneath the reactor.

The supply unit is equipped with a heating water circuit with pump, tank and heater to control the temperature in the reactor. Conductivity and temperature in the reactor are measured with a combined sensor. The switch cabinet contains the necessary controls to adjust the speed of the stirrers in the stirred tank reactors. The measured values are digitally displayed on the switch cabinet. At the same time, they can also be transmitted directly to a PC via USB where they can be analysed with the data acquisition software included in the scope of delivery.

The well-structured instructional material sets out the fundamentals and provides a step-by-step guide through the experiments.

Learning Objectives / Experiments

in conjunction with a reactor (CE 310.01 - CE 310.04):
- conversion of substances depending on
  * reactor type
  * residence time in the reactor
  * temperature
- fundamentals of a saponification reaction

CE 310 Supply Unit for Chemical Reactors

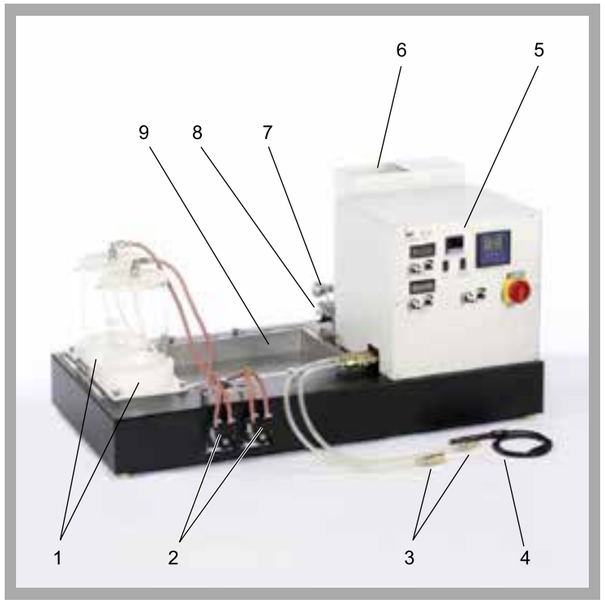

1 tanks for reactants, 2 pumps for reactants, 3 connections for heating water, 4 combined sensor (conductivity and temperature), 5 switch cabinet, 6 heating water tank, 7 temperature sensor (heating water), 8 heater, 9 product tank

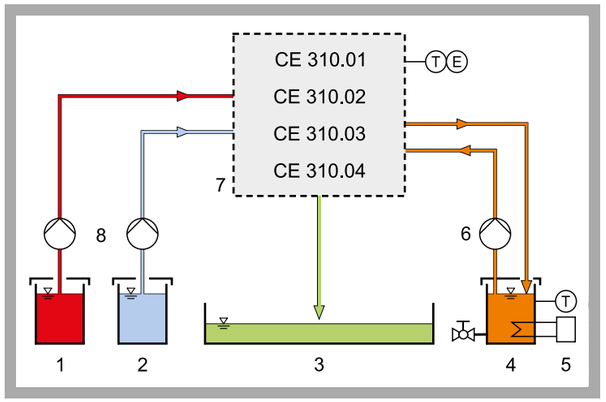

1 reactant A, 2 reactant B, 3 product, 4 heating water, 5 heater, 6 heating water pump, 7 reactor, 8 pumps for reactants; E conductivity, T temperature

Specification

[1] supply unit for 4 different chemical reactor types
[2] attachment of the reactors on the supply unit with knurled bolts
[3] connection of the reactors via hoses with quick-release couplings
[4] heating water circuit with tank, heater, temperature controller, pump and low water cut-off
[5] 2 glass tanks for reactants
[6] 2 identical peristaltic pumps to convey the reactants
[7] product tank made of stainless steel
[8] combined sensor for measuring the conductivity and temperature
[9] temperature control in the reactor
[10] GUNT software for data acquisition via USB under Windows Vista or Windows 7

Technical Data

Peristaltic pumps for reactants
- max. flow rate: approx. 200mL/min with hose 4,8x1,6mm

Heating water pump
- max. flow rate: 10L/min
- max. head: 30m
- power consumption: 120W

Heater
- power consumption: approx. 1500W

Tanks
- reactants: 2x 5L
- product: approx. 15L
- heating water: approx. 15L

Measuring ranges
- conductivity: 0...200mS/cm
- temperature: 0...100°C
- speed of the peristaltic pumps: 2x 0...100%

Dimensions and Weight

LxWxH: 1210x690x630mm
Weight: approx. 90 kg

Required for Operation

230V, 50/60Hz, 1 phase or 120V, 60Hz/CSA, 1 phase

Scope of Delivery

1 experimental unit
1 combined sensor (conductivity and temperature)
500mL calibration solution (potassium chloride)
1 set of hoses
1 GUNT software CD + USB cable
1 set of instructional material

Order Details

083.31000 CE 310 Supply Unit for Chemical Reactors

G.U.N.T Gerätebau GmbH, Hanskampring 15-17, D-22885 Barsbüttel, Phone +49 (40) 67 08 54-0, Fax +49 (40) 67 08 54-42, E-mail sales@gunt.de, Web http://www.gunt.de
We reserve the right to modify our products without any notifications.

CE 310.01 Continuous Stirred Tank Reactor

* Stirred tank reactor for connection to supply unit CE 310
* Discontinuous and continuous operation possible
* Transparent materials to observe the process
* Adjustable reactor capacity
* Determination of the conversion in a saponification reaction

Technical Description

Stirred tank reactors can be operated continuously or discontinuously. Discontinuously operated stirred tank reactors are mostly used if the product quantities to be produced are small or the reactions are slow. Continuous stirred tank reactors enable the reliable production of large product quantities with a consistent quality.

CE 310.01 is part of a device series that enables experiments with different reactor types. In conjunction with the supply unit CE 310, it is possible to examine the function and behaviour of a stirred tank reactor in continuous and discontinuous operation. The supply unit CE 310 has a heating water circuit, all necessary connections, pumps, tanks for reactants and a product tank.

CE 310.01 is mounted onto the supply unit with knurled bolts. In continuous operation, two pumps on the supply unit convey the reactants into the reactor. A stirrer ensures a homogeneous mixture and thus contact between the reactants. The product is formed by reaction of the reactants. The mixture of product and unconverted reactants leaves the reactor through an overflow and is collected in a tank of the supply unit.

The height of the overflow is variable. The reactor capacity is therefore adjustable. The residence time of the reactants in the reactor is adjusted via the speed of the pumps on the supply unit. A coiled tube in the stirred tank reactor serves as the heat exchanger to examine the influence of the temperature on the reaction. Quick-release couplings enable easy connection of the coiled tube to the heating water circuit of the supply unit.

The conversion in the stirred tank reactor is determined by measuring the conductivity. For this purpose, the reactor has an opening for a combined conductivity/temperature sensor. The sensor is included in the scope of delivery of the supply unit. Conductivity and temperature are digitally displayed on the switch cabinet of the supply unit. In addition, the measured values can be captured and processed with data acquisition software (included in CE 310).

Learning Objectives / Experiments

- fundamentals of a saponification reaction
- discontinuous operation
  * progress of the conversion over time
  * conversion depending on temperature
- continuous operation
  * conversion depending on residence time
  * conversion depending on temperature

CE 310.01 Continuous Stirred Tank Reactor

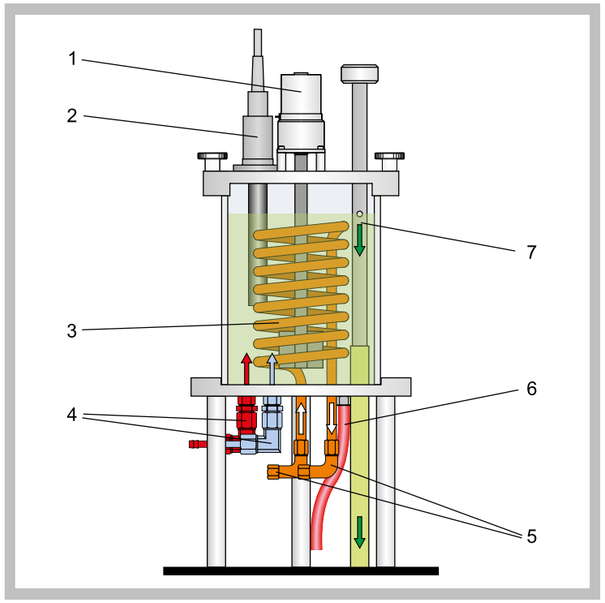

1 stirrer, 2 sensor for conductivity and temperature (from CE 310), 3 coiled tube for heating water, 4 connection for reactants, 5 connection for heating water, 6 outlet for emptying, 7 height-adjustable overflow for product

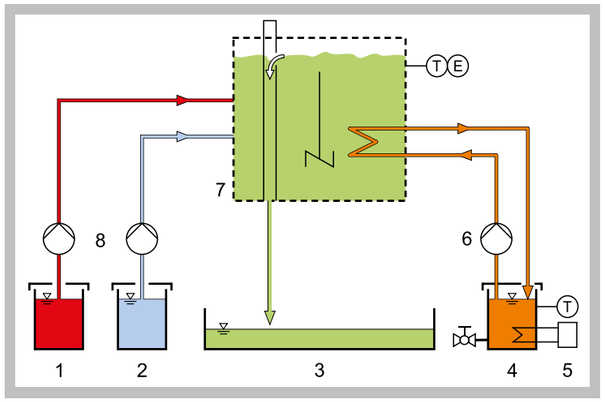

Process schematic (with supply unit CE 310):
1 reactant A, 2 reactant B, 3 product, 4 heating water, 5 heater, 6 heating water pump, 7 reactor, 8 pumps for reactants; E conductivity, T temperature

Specification

[1] continuous stirred tank reactor for connection to supply unit CE 310
[2] glass tank
[3] height-adjustable overflow for changing the reactor capacity
[4] stirrer with adjustable speed (via CE 310)
[5] coiled tube made of stainless steel as heat exchanger for connection to the heating water circuit of CE 310
[6] sensor for measuring the conductivity and temperature via CE 310
[7] temperature control in the reactor via CE 310

Technical Data

Reactor
- outer diameter: 130mm
- inside diameter: 120mm
- height: approx. 150mm
- adjustable capacity: 400...1500mL

Speed stirrer: 0...330min^{-1}

Dimensions and Weight

LxWxH: 470x225x410mm
Weight: approx. 13kg

Required for Operation

Ethyl acetate, caustic soda (for saponification reaction)

Scope of Delivery

1 continuous stirred tank reactor

Order Details

083.31001 CE 310.01 Continuous Stirred Tank Reactor

G.U.N.T Gerätebau GmbH, Hanskampring 15-17, D-22885 Barsbüttel, Phone +49 (40) 67 08 54-0, Fax +49 (40) 67 08 54-42, E-mail sales@gunt.de, Web http://www.gunt.de
We reserve the right to modify our products without any notifications.

CE 310.02 *Tubular Reactor*

*** Tubular reactor for connection to supply unit CE 310**

*** Preheating of the reactants**

*** Determination of the conversion in a saponification reaction**

Technical Description

Tubular reactors are continuously operated reactors. They enable economic production of large product quantities with a consistent quality.

CE 310.02 is part of a device series that enables experiments with different reactor types. In conjunction with the supply unit CE 310, it is possible to examine the function and behaviour of a tubular reactor. The supply unit CE 310 has a heating water circuit, all necessary connections, pumps, tanks for reactants and a product tank.

CE 310.02 is mounted onto the supply unit with knurled bolts. The two pumps of the supply unit convey the reactants separately into the reactor. Two coiled tubes located in a water bath preheat the reactants. After preheating, each of the reactants flows through a nozzle. The nozzle outlets are located in a T-piece in such a way that the two reactants are mixed in the centre of the T-piece. The mixture enters into the helical tube in which the two reactants react. The mixture of product and unconverted reactants leaves the tube and is collected in a tank of the supply unit.

The residence time of the reactants in the tubular reactor is adjusted via the speed of the pumps on the supply unit. The tube is also located in the water bath. The water bath is connected to the heating water circuit of the supply unit, which enables the user to examine the influence of the temperature on the reaction. An overflow ensures that the level of the water bath remains constant.

The conversion in the tubular reactor is determined by measuring the conductivity. For this purpose, the reactor has an opening for a combined conductivity/temperature sensor. The sensor is included in the scope of delivery of the supply unit. Conductivity and temperature are digitally displayed on the switch cabinet of the supply unit. In addition, the measured values can be captured and processed with data acquisition software (included in CE 310).

Learning Objectives / Experiments

- fundamentals of a saponification reaction
- conversion
  * depending on residence time
  * depending on the temperature

CE 310.02 *Tubular Reactor*

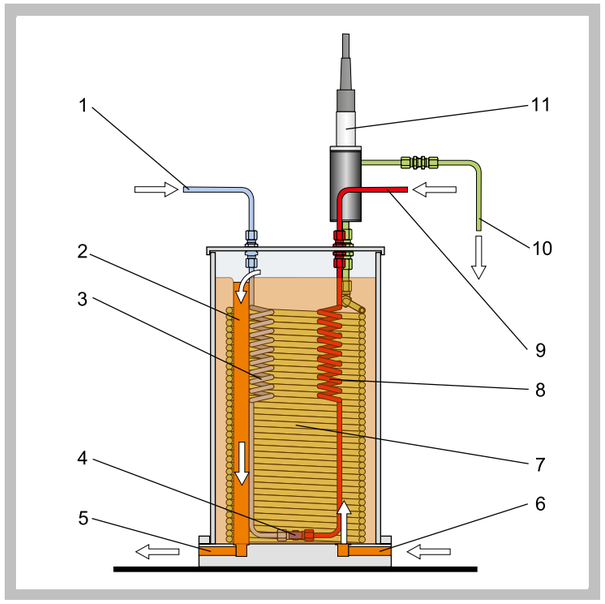

1 inlet for reactant A, 2 heating water overflow, 3 preheating of reactant A, 4 T-piece for mixing the reactants, 5 heating water outlet, 6 heating water inlet, 7 tube, 8 preheating of reactant B, 9 inlet for reactant B, 10 product outlet, 11 sensor for conductivity and temperature (from CE 310)

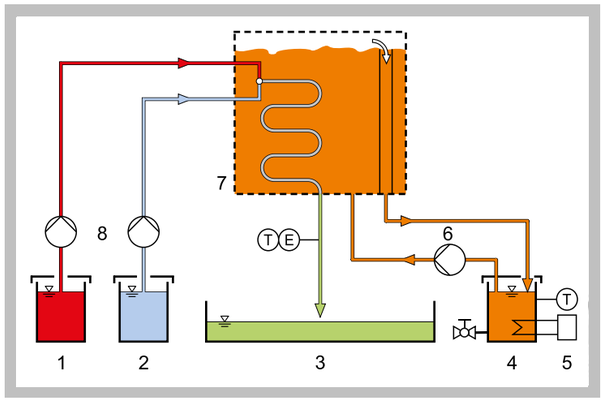

Process schematic (with supply unit CE 310):
1 reactant A, 2 reactant B, 3 product, 4 heating water, 5 heater, 6 heating water pump, 7 tubular reactor, 8 pumps for reactants; E conductivity, T temperature

Specification

[1] tubular reactor for connection to supply unit CE 310
[2] helical plastic tube as reactor
[3] 2 helical stainless steel tubes for preheating the reactants
[4] T-piece with 2 nozzles for mixing the preheated reactants
[5] transparent PMMA tank as water bath for the reactor and for preheating for connection to the heating water circuit of CE 310
[6] sensor for measuring the conductivity and temperature via CE 310
[7] temperature control in the reactor via CE 310

Technical Data

Tubular reactor
- inside diameter: approx. 5,5mm
- reactor capacity: approx. 475mL
- material: PA

Water bath
- inside diameter: approx. 200mm
- capacity: approx. 1500mL
- material: PMMA

Dimensions and Weight

LxWxH: 470x320x600mm
Weight: approx. 25kg

Required for Operation

Ethyl acetate, caustic soda (for saponification reaction)

Scope of Delivery

1 tubular reactor

Order Details

083.31002 CE 310.02 Tubular Reactor

G.U.N.T Gerätebau GmbH, Hanskampring 15-17, D-22885 Barsbüttel, Phone +49 (40) 67 08 54-0, Fax +49 (40) 67 08 54-42, E-mail sales@gunt.de, Web http://www.gunt.de
We reserve the right to modify our products without any notifications.

CE 310.03 *Stirred Tanks in Series*

*** Stirred tanks in series for connection to supply unit CE 310**

*** Transparent materials to observe the process**

*** Determination of the conversion in a saponification reaction possible for every stage**

Technical Description

Stirred tanks in series are, as the name says, continuous stirred tank reactors connected in series. They enable a higher conversion than a single stirred tank reactor. Stirred tanks in series enable flexible process control as the temperature and residence time can be set separately for each individual reactor.

CE 310.03 is part of a device series that enables experiments with different reactor types. In conjunction with the supply unit CE 310, it is possible to examine the function and behaviour of stirred tanks in series. The supply unit CE 310 has a heating water circuit, all necessary connections, pumps, tanks for reactants and a product tank.

CE 310.03 is mounted onto the supply unit with knurled bolts. In continuous 3-stage operation, two pumps of the supply unit convey the reactants into the first reactor. A stirrer ensures a homogeneous mixture and thus contact between the reactants. The product is formed by reaction of the reactants. The mixture of product and unconverted reactants leaves the reactor through an overflow and is then conveyed into two further identical reactors one after the other. After the third reactor there is a long hose section to determine the conversion at an almost total equilibrium of the reaction. This conversion can be used as reference for the conversions in the individual stirred tanks. It is also possible to examine 1 or 2-stage operation using three-way plug valves.

The residence time of the reactants in the reactor is adjusted via the speed of the pumps on the supply unit. The conversions in the individual reactors and at the end of the long hose section are determined by measuring the conductivity. For this purpose, each of the three reactors and the hose section have an opening for combined conductivity / temperature sensors.

Each of the conductivity/temperature sensors can be individually selected at the control unit, and the values are displayed on the switch cabinet of the supply unit. In addition, the measured values can be captured and processed with data acquisition software (via CE 310).

Learning Objectives / Experiments

- fundamentals of a saponification reaction
- conversion in each reactor
  * depending on residence time
  * depending on the temperature

CE 310.03 *Stirred Tanks in Series*

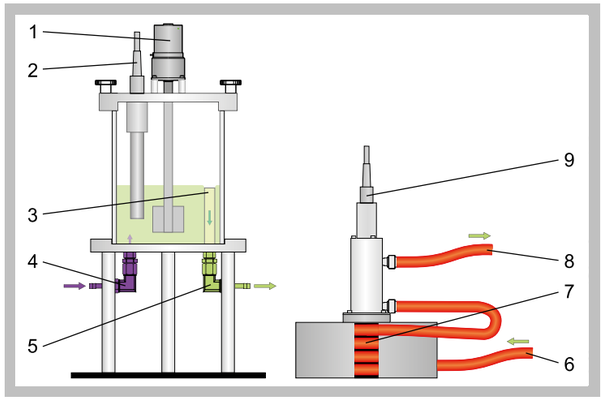

Stirred tank reactor (left):
1 stirrer, 2 sensor for conductivity and temperature, 3 overflow for product, 4 connection for reactants, 5 connection for product

Hose section (right):
6 connection for reactants, 7 tube, 8 product outlet, 9 sensor for conductivity and temperature (from CE 310)

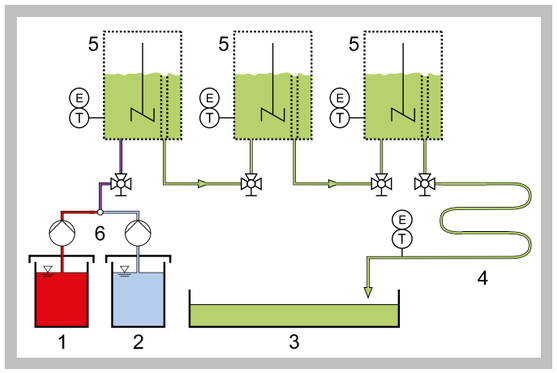

Process schematic (with supply unit CE 310):
1 reactant A, 2 reactant B, 3 product, 4 tube section, 5 stirred tank reactor, 6 pumps for reactants; E conductivity, T temperature

Control unit for sensors and stirrers

Specification

[1] stirred tanks in series for connection to supply unit CE 310
[2] 3 identical stirred tank reactors made of glass connected in series
[3] switching to 1, 2 or 3-stage operation possible via plug valves
[4] hose section for determining the conversion at an almost total equilibrium of the reaction
[5] control unit with selector switch for conductivity/temperature sensor and controls for 3 stirrers
[6] measuring the conductivity and temperature via CE 310

Technical Data

3 reactors
- outer diameter: each 130mm
- inside diameter: each 120mm
- height: each 150mm
- reactor capacity: each approx. 500mL

Speed stirrer: 3x 0...330min^{-1}
Hose section
- inside diameter: approx. 9mm
- length: 280cm
- reactor capacity: approx. 180mL

Measuring ranges
- conductivity: 4x 0...200mS/cm
- temperature: 4x 0...100°C

Dimensions and Weight

LxWxH: 460x470x520mm (stirred tanks in series)
LxWxH: 180x180x230mm (hose section)
LxWxH: 370x160x300mm (control unit)
Weight: approx. 32kg

Required for Operation

Ethyl acetate, caustic soda (for saponification reaction)

Scope of Delivery

1 set of reactors
1 hose section
1 control unit
3 sensors for conductivity and temperature

Order Details

083.31003 CE 310.03 Stirred Tanks in Series

G.U.N.T Gerätebau GmbH, Hanskampring 15-17, D-22885 Barsbüttel, Phone +49 (40) 67 08 54-0, Fax +49 (40) 67 08 54-42, E-mail sales@gunt.de, Web http://www.gunt.de
We reserve the right to modify our products without any notifications.

CE 310.04 Discontinuous Stirred Tank Reactor

* **Discontinuous stirred tank reactor for connection to supply unit CE 310**
* **Adiabatic and isothermic operation possible**
* **Determination of the conversion in a saponification reaction**

Technical Description

Discontinuously operated stirred tank reactors are mostly used if the product quantities to be produced are small or the reactions are slow.

CE 310.04 is part of a device series that enables experiments with different reactor types. In conjunction with the supply unit CE 310, it is possible to examine the function and behaviour of a discontinuous stirred tank reactor. The supply unit CE 310 has a heating water circuit, all necessary connections, pumps, tanks for reactants and a product tank.

CE 310.04 is mounted onto the supply unit with knurled bolts. The reactants are poured directly into the tank at the beginning. A stirrer ensures a homogeneous mixture and thus contact between the reactants. The product is formed by reaction of the reactants.

In isothermic operation, a coiled tube in the stirred tank reactor serves as the heat exchanger to keep the temperature constant by heating or cooling. Quick-release couplings enable easy connection of the coiled tube to the heating water circuit of the supply unit.

In adiabatic operation, there is no external heating or cooling. The reactor is heat-insulated so that there is no heat transfer through the tank wall. If heat is generated during the reaction, the temperature in the reactor rises and, in turn, influences the reaction.

The conversion in the stirred tank reactor is determined by measuring the conductivity. For this purpose, the reactor has an opening for a combined conductivity/temperature sensor. The sensor is included in the scope of delivery of the supply unit. Conductivity and temperature are digitally displayed on the switch cabinet of the supply unit. In addition, the measured values can be captured and processed with data acquisition software (included in CE 310).

Learning Objectives / Experiments

- fundamentals of a saponification reaction
- isothermic operation
  * progress of the conversion over time
- adiabatic operation
  * progress of the conversion over time
  * temperature change over time

CE 310.04 Discontinuous Stirred Tank Reactor

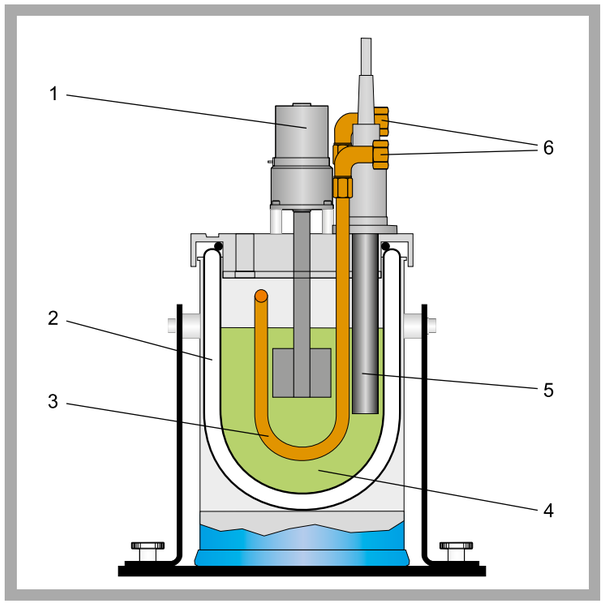

1 stirrer, 2 heat insulation, 3 coiled tube, 4 reactor contents, 5 sensor for conductivity and temperature (from CE 310), 6 connections for heating water

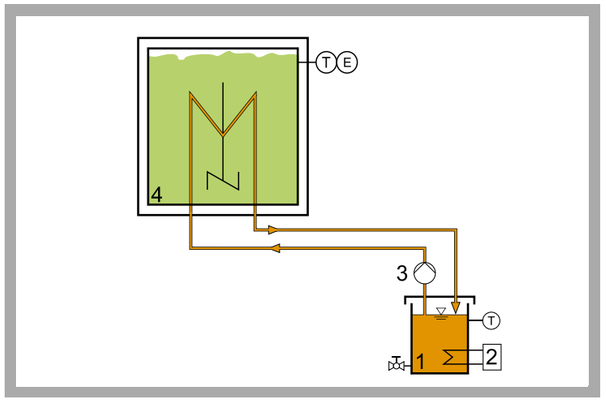

Process schematic (with supply unit CE 310):
1 heating water, 2 heater, 3 heating water pump, 4 discontinuous stirred tank reactor; E conductivity, T temperature

Specification

[1] discontinuous stirred tank reactor for connection to supply unit CE 310
[2] heat-insulated glass tank with metal jacket
[3] stirrer with adjustable speed (via CE 310)
[4] coiled tube made of stainless steel as heat exchanger for connection to the heating water circuit of CE 310
[5] measuring the conductivity and temperature via CE 310

Technical Data

Reactor
- outer diameter: 130mm
- inside diameter: 100mm
- outside height: 215mm
- inside height: 150mm
- capacity: approx. 1000mL

Speed stirrer: 0...330min^{-1}

Dimensions and Weight

LxWxH: 470x230x290mm
Weight: approx. 8kg

Required for Operation

Ethyl acetate, caustic soda (for saponification reaction)

Scope of Delivery

1 discontinuous stirred tank reactor
2 beakers
1 funnel

Order Details

083.31004 CE 310.04 Discontinuous Stirred Tank Reactor

G.U.N.T Gerätebau GmbH, Hanskampring 15-17, D-22885 Barsbüttel, Phone +49 (40) 67 08 54-0, Fax +49 (40) 67 08 54-42, E-mail sales@gunt.de, Web http://www.gunt.de
We reserve the right to modify our products without any notifications.

CE 100 *Tubular Reactor*

*** Tubular reactor in water bath with temperature control**

*** Preheating of the reactants possible**

*** Determination of the conversion in a saponification reaction**

Technical Description

Tubular reactors are continuously operated reactors. They enable economic production of large product quantities with a consistent quality.

The core element of CE 100 is a helical plastic tube. Two pumps convey the reactants separately into the reactor from two tanks. Two coiled tubes located in a water bath preheat the reactants. After preheating, each of the reactants flows through a nozzle. The nozzle outlets are located in a T-piece in such a way that the two reactants are mixed in the centre of the T-piece. The mixture enters into the tube in which the two reactants react. The mixture of products and unconverted reactants leaves the tube and is collected in a tank.

The flow rates, and thus the retention time of the reactants in the tubular reactor, are adjusted via valves and displayed on flow meters. The flow tube is located in the water bath together with the two coiled tubes. The water bath is heated by a controlled heater. The controller on the switch cabinet serves to set the desired temperature and indicates the current temperature of the water bath. An overflow and connections for cooling the water bath via an external water supply are provided. A stirrer ensures an even temperature distribution in the water bath.

The conversion in the tubular reactor is determined by measuring the conductivity. Samples can be taken at the end of the tube for this purpose. A sensor records the temperature at the outlet of the tube. The temperature is displayed on the switch cabinet.

The well-structured instructional material sets out the fundamentals and provides a step-by-step guide through the experiments.

Learning Objectives / Experiments

- fundamentals of a saponification reaction
- conversion
  * depending on retention time
  * depending on the temperature

CE 100 *Tubular Reactor*

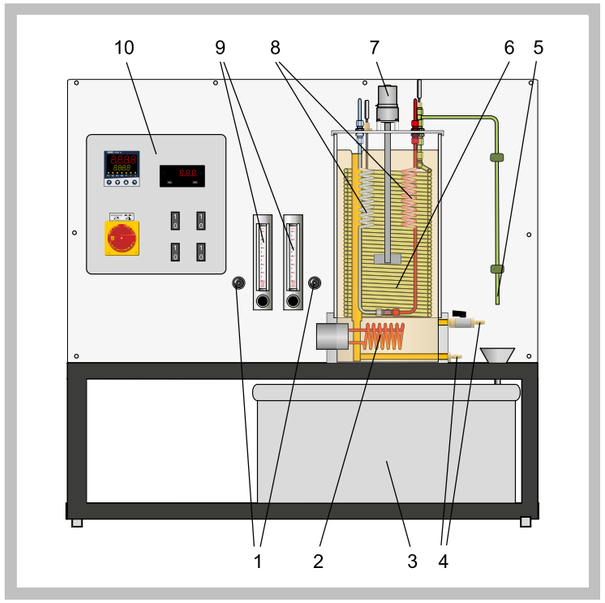

1 valves for aeration of the reactant tanks, 2 heater, 3 product tank, 4 connection for cooling the reactor, 5 product outlet, 6 tube, 7 stirrer, 8 preheating of the reactants, 9 reactant flow meters, 10 switch cabinet

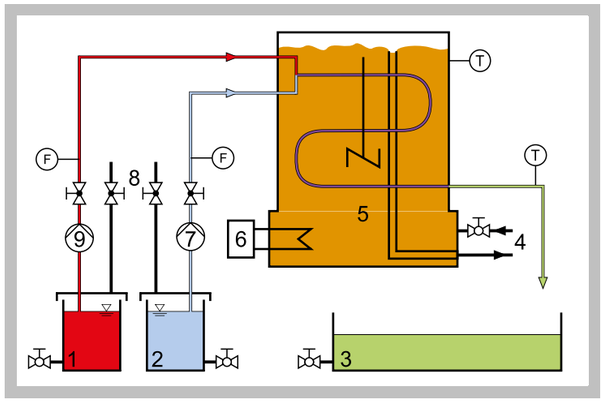

1 reactant A, 2 reactant B, 3 product, 4 connections for cooling of the reactor, 5 tubular reactor, 6 heater, 7 pump for reactant B, 8 valves for aeration of the reactant tanks, 9 pump for reactant A; F flow rate, T temperature

Specification

[1] continuous tubular reactor for performing a saponification reaction
[2] helical plastic tube as reactor
[3] 2 identical pumps to convey the reactants
[4] separate adjustment of the reactant flow rates via valves
[5] 2 helical stainless steel tubes for preheating the reactants
[6] T-piece with 2 nozzles for mixing the preheated reactants
[7] transparent PMMA tank with heater and stirrer as water bath for the reactor and for preheating
[8] controller for adjusting the temperature of the water bath
[9] 2 tanks for reactants, 1 tank for products and 1 tank for cleaning fluid
[10] measuring of flow rate and temperature

Technical Data

Tubular reactor
- inside diameter: approx. 5,5mm
- reactor capacity: approx. 480mL
- material: PA

Reactant pumps
- max. flow rate: each 300mL/min
- max. head: each 10m

Water bath
- inside diameter: approx. 200mm
- capacity: approx. 6L
- material: PMMA

Speed of stirrer: max. 135min^{-1}

Heater
- power consumption: approx. 3kW

Tanks
- reactants: 2x 20L
- cleaning liquid: 1x 20L
- products: 1x 50L

Measuring ranges
- flow rate: 2x 20...340mL/min
- temperature: 2x 0...80°C

Dimensions and Weight

LxWxH: 1200x600x1050mm
Weight: approx. 110kg

Required for Operation

230V, 50/60Hz, 1 phase or 230V, 60Hz/CSA, 3 phases
Conductivity meter, balance, ethyl acetate, caustic soda (for saponification reaction)

Scope of Delivery

1 experimental unit
2 hoses, 1 valve for cleaning, 1 funnel
1 set of instructional material

Order Details

083.10000 CE 100 Tubular Reactor

G.U.N.T Gerätebau GmbH, Hanskampring 15-17, D-22885 Barsbüttel, Phone +49 (40) 67 08 54-0, Fax +49 (40) 67 08 54-42, E-mail sales@gunt.de, Web http://www.gunt.de
We reserve the right to modify our products without any notifications.

BASIC KNOWLEDGE

CATALYTIC ACTIVATION

Many reactions are too slow for technical applications at ambient temperature because the required activation energy is very high. Catalysts lower the required activation energy and accelerate the chemical reaction. Thus, some reactions would not be possible without a catalyst reducing the energy required for production.

According to Wilhelm Ostwald, a catalyst is any substance that changes the speed of a reduction without appearing in the end product. Catalysis can be understood as the acceleration of a chemical reaction by means of a catalyst. Catalysts are used in approximately 80% of all industrial chemical processes.

In the simple case of the reaction of an reactant ***A*** to a product ***P*** by means of a catalyst ***K***, one can imagine that the catalysis occurs via an intermediate product ***X***. The reactant and the catalyst thus first form an intermediate product. In a second step, the catalyst is released and the intermediate product is converted to form the product ***P***. The catalyst is unchanged after the reaction and is available again for further reactions.

One possible explanation of catalysis is the theory of the transition state. This theory assumes that the reactants involved in the reaction have to cross an energy barrier for the reaction to take place. The molecular state at the maximum of the energy barrier E_1 is referred to as activated complex. The products form directly from this molecular state. During catalysis, the activated complex is formed from the reactants and the catalyst. The energy E_2, which is required to form the complex with the catalyst, is lower than the energy ***E1*** which would be required without the catalyst. This lower energy requirement means that a larger number of reactants react per time unit to form products, i.e. the reaction rate is higher.

There are two types of catalysis:

- **Homogeneous catalysis**
The catalyst and the starting substances of the chemical reaction are in the same phase. This means that the reaction takes place either in the liquid or in the gaseous phase. In the liquid phase, the properties of the solvent (e.g. viscosity) also influence the reaction rate in addition to the type of reactants and catalyst.

- **Heterogeneous catalysis**
The catalyst is in the solid phase in most cases. The starting substances of the reaction are in the liquid or gaseous phase. In addition to the actual chemical reaction between reactants and catalyst, processes such as diffusion inside the solid catalyst and sorption processes have a significant influence on the reaction rate.

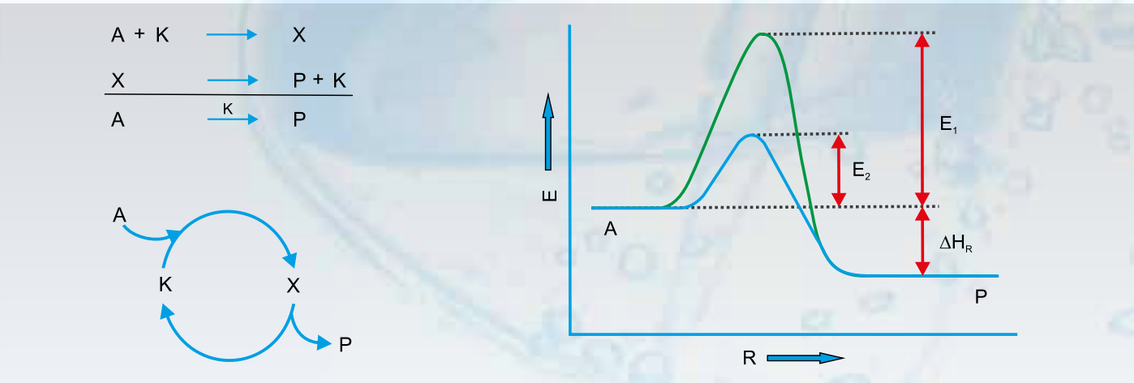

Reaction schematic of a simple catalytic reaction as a schematic (top) and cycle (bottom):

A *reactant,* ***K*** *catalyst,*
X *intermediate product,* ***P*** *product*

Energy change with and without catalyst (exothermic):

E *energy,* ***R*** *reaction coordinate,* E_1 *energy required to form an activated complex without catalyst,* E_2 *energy required to form an activated complex with catalyst,*
ΔH_R *reaction enthalpy*

BASIC KNOWLEDGE

PHOTOCHEMICAL ACTIVATION

In a photochemical activation, the activation energy to enable or accelerate the reaction is applied by means of electromagnetic radiation. When the atoms or molecules absorb this radiation, they achieve a higher energy level and are activated. For an effective reaction process, the emission spectrum (wavelength range) of the light source used has to be as similar to the absorption spectra of the reacting substances as possible.

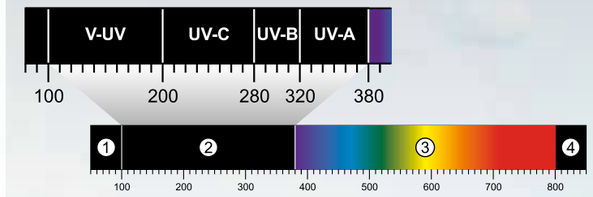

Spectrum of electromagnetic waves:

1 *X-radiation,* ***2*** *ultraviolet radiation,* ***3*** *visible light,*
4 *infrared radiation*

In industrial-scale photochemical reactions, the electromagnetic radiation leads to the formation of radicals. The most important property of radicals is that they have a an unpaired valence electron instead of an electron pair. This electron gives the radical its great reactivity and enables the reaction rates necessary for the industrial process. One advantage of photochemical activation is the possibility to activate specific chemical bonds by selecting a suitable emission spectrum. Another advantage is the fact that the reaction rate can be easily influenced by switching light sources on or off.

The following applications are examples of the industrial use of photochemical reactions:

- chlorination of hydrocarbons
- vitamin D production
- polyvinyl chloride (PVC) production
- treatment of wastewater contents

The electromagnetic radiation is mostly generated by means of lamps working according to the electric discharge principle. The gas used is normally mercury vapour.

The following lamp types are generally distinguished:

- **Low-pressure lamps**
These lamps generate a nearly monochromatic light (light of a single wavelength) with a wavelength of 254 nm (UV-C).

- **Medium-pressure lamps**
These lamps emit radiation of various wavelengths in the UV range and in the visible range. The emission spectrum is in the range of 200...600 nm.

- **High-pressure lamps**
The spectrum of these lamps ranges from the short-wave UV range (V-UV) far into the visible range. It is used in many photochemical reactions.

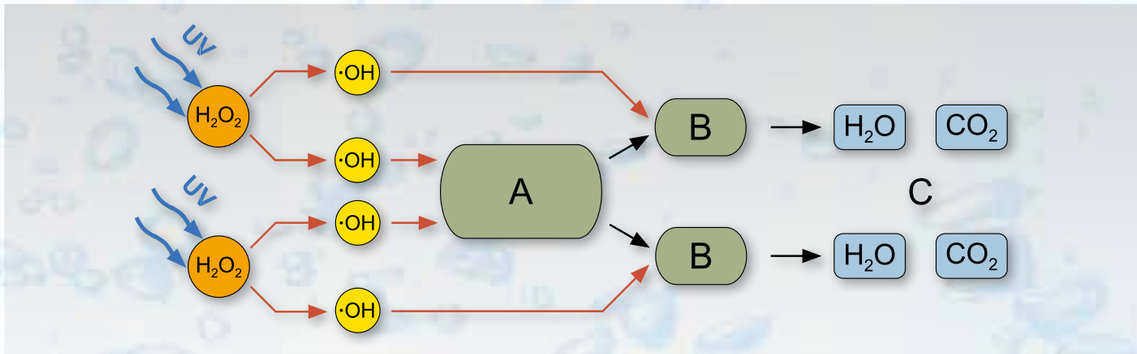

Example of a photochemically activated reaction to decompose organic, nonbiodegradable substances:

H_2O_2 *hydrogen peroxide,* ***·OH*** *hydroxyl radical,* ***A*** *organic, nonbiodegradable substance,*
B *organic intermediate products,* ***C*** *inorganic end products*

CE 380 Fixed Bed Catalysis

The illustration shows a similar unit.

*** Chemical and biological fixed bed catalysis**

*** 3 reactors for comparative experiments**

*** Product analysis with photometer**

Technical Description

Catalysts enable or accelerate chemical reactions. CE 380 is designed for the decomposition reaction of dissolved saccharose in glucose and fructose.

A peristaltic pump transports the reactant (saccharose solution) into bottom of the reactor from a tank. The catalyst takes the form of a fixed bed in the reactor. The saccharose solution flows through the fixed bed. In the process, saccharose is decomposed into glucose and fructose. The catalyst accelerates the reaction and so increases the yield of the product (glucose/fructose mixture). The product is collected in a tank.

Three reactors allow various catalyses to be compared. The chemical catalyst used is exchanger resin. The recommended biological catalyst is the enzyme invertase. A regulated heating water circuit additionally permits analysis of the influence of temperature on the reaction.

To determine the glucose concentration in the product, a photometer specifically adapted to the unit is supplied. The photometer data are transferred to a PC and evaluated by software. The flow injection analysis (FIA) CE 380.01 is available as an optional accessory. The FIA enables a larger number of measurements to be performed during the experiment compared to manual analysis, while at the same time reducing the effort involved and improving reproducibility.

The well-structured instructional material sets out the fundamentals and provides a step-by-step guide through the experiments.

Learning Objectives / Experiments

- fundamentals of chemical catalysis
- fundamentals of enzymatic catalysis
- use of a photometric analyser
- drawing up a quantity balance
- determining yield

CE 380 Fixed Bed Catalysis

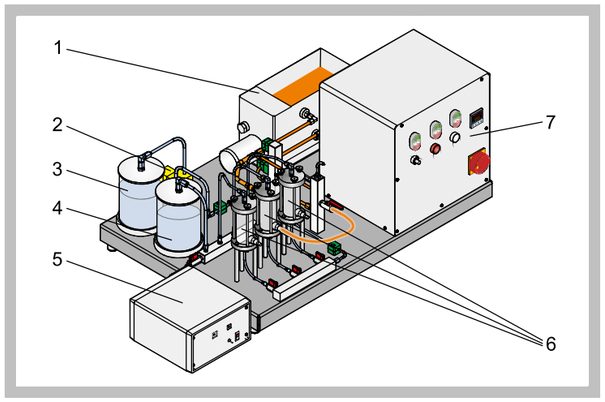

1 water tank for heating circuit, 2 peristaltic pump, 3 reactant tank, 4 product tank, 5 photometer, 6 reactor, 7 switch cabinet

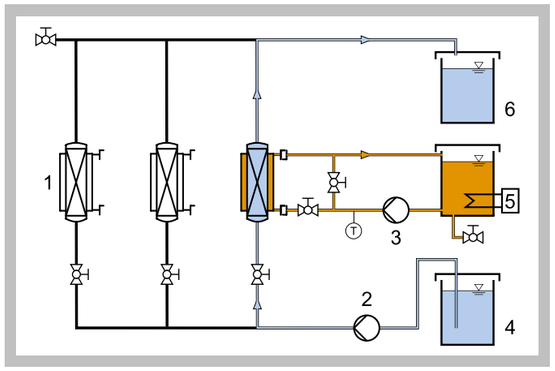

1 reactor, 2 peristaltic pump, 3 heating circuit pump, 4 reactant tank, 5 heater, 6 product tank

Photometer: 1 cell, 2 light conductor, 3 spectrometer connection, 4 main switch, 5 light source connection, 6 cap

Specification

[1] investigation of catalytic reactions
[2] 3 reactors (PMMA) for comparison of various fixed bed catalyses
[3] peristaltic pump with adjustable speed to transport the reactant into the reactors
[4] regulated heating circuit with water tank, heater and pump to regulate the reactor temperatures
[5] 1 scaled container for reactant and product respectively
[6] photometer for analysis of the product
[7] software for data acquisition via USB under Window Vista or Windows 7 (photometer)
[8] flow injection analysis (CE 380.01) available as accessory

Technical Data

Reactors
- diameter: approx. 10mm
- height: approx. 120mm

Peristaltic pump
- max. flow rate: approx. 28mL/min

Heating circuit pump
- max. flow rate: 10L/min
- max. head: 30m
- power consumption: 120W

Heating circuit
- tank: approx. 7500mL
- heater: approx. 1kW

Tanks for reactant and product
- capacity: approx. 2000mL
- scale division: 50mL
- material: PP

Photometer wavelength: 610nm

Dimensions and Weight

LxWxH: 1000x680x485mm (experimental unit)
LxWxH: 260x260x180mm (photometer)
Weight: approx. 63kg

Required for Operation

230V, 50/60Hz, 1 phase or 120V, 60Hz/CSA, 1 phase

Scope of Delivery

1 experimental unit
1 photometer
1 cpacking unit of chemical catalyst
1 CD with software for photometer
1 set of hoses
2 light conductors
1 single-end wrench
1 stopwatch
1 funnel
3 bottles
1 beaker
1 set of instructional material

Order Details

083.38000 CE 380 Fixed Bed Catalysis

G.U.N.T Gerätebau GmbH, Hanskampring 15-17, D-22885 Barsbüttel, Phone +49 (40) 67 08 54-0, Fax +49 (40) 67 08 54-42, E-mail sales@gunt.de, Web http://www.gunt.de
We reserve the right to modify our products without any notifications.

CE 380.01 *Flow Injection Analysis*

*** Professional analyser for CE 380**

*** Continuous photometric determination of the glucose concentration**

Technical Description

The flow injection analysis (FIA) supplements CE 380. It uses the photometer in CE 380 as a detector to detect the reaction product glucose.

The multi-channel pump permanently conveys three liquid flows into the FIA. The dissolved reaction products from CE 380 and an indicator reagent are first mixed in one chamber. The mixture then flows through a helical reaction loop. The conduction of the flow in the reaction loop enables an even distribution of all substances. Another indicator reagent is added in a second mixing chamber. After flowing through another reaction loop, the mixture enters the flow cell. There the light intensity is continuously measured with the photometer to determine the glucose concentration. To trigger the discolouration for the photometric measurement, a defined amount of the enzyme glucose oxidase (GOD) is injected through an injection valve. The indicator reagents and the enzyme GOD are not included in the scope of delivery.

CE 380.01 enables more measurements during the experiment than a manual analysis. In addition, the reproducibility is improved and it is no longer necessary to mix each individual sample.

The well-structured instructional material sets out the fundamentals and provides a step-by-step guide through the experiments.

Learning Objectives / Experiments

- using the flow injection analysis (FIA)
- determining the concentration
- determining the yield for CE 380

CE 380.01 *Flow Injection Analysis*

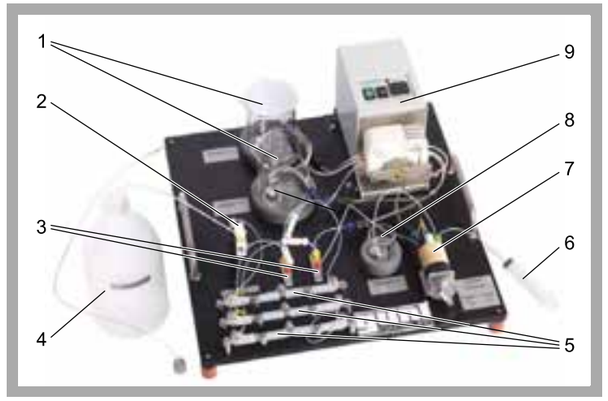

1 tanks for reagents A and B, 2 flow cell, 3 mixing chambers, 4 waste, 5 reaction loop, 6 injection syringe, 7 injection valve, 8 GOD, 9 multi-channel peristaltic pump

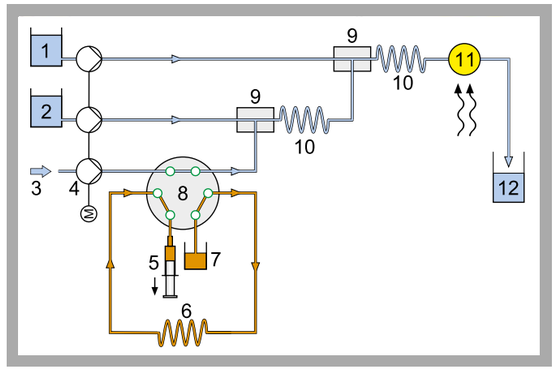

Filling the injection loop with GOD:
1 reagent B, 2 reagent A, 3 reaction products from CE 380, 4 multi-channel peristaltic pump, 5 injection syringe, 6 injection loop, 7 GOD, 8 injection valve, 9 mixing chambers, 10 reaction loops, 11 flow cell, 12 waste

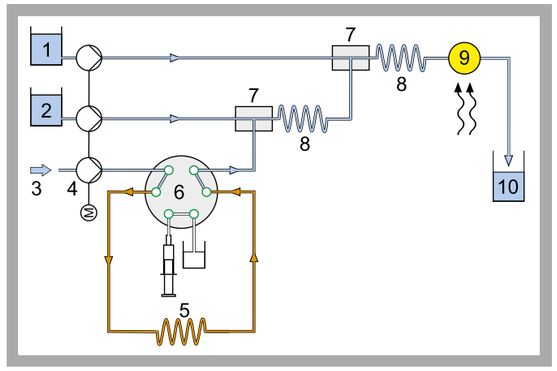

Injecting GOD:
1 reagent B, 2 reagent A, 3 reaction products from CE 380, 4 multi-channel peristaltic pump, 5 injection loop, 6 injection valve, 7 mixing chamber, 8 reaction loop, 9 flow cell, 10 waste

Specification

[1] continuous, photometric determination of the glucose concentration in the product from CE 380
[2] PTFE flow cell for determining the concentration with the photometer from CE 380
[3] multi-channel peristaltic pump for conveying the product from CE 380 and the indicator reagents
[4] injection valve, injection syringe and injection loop for adding the enzyme GOD required for verification
[5] 2 mixing chambers for mixing the product and indicator reagents
[6] 2 PTFE reaction loops
[7] 3 DURAN glass beakers for indicator reagents and GOD
[8] 1 tank for waste

Technical Data

Flow cell travel length: 1cm
Multi-channel peristaltic pump
- 4 channels
- max. flow rate per channel: 11mL/min at 100min^{-1} and hose D_i=1,42mm

Injection valve
- 6 connections
- 2 switch positions

Loops
- reaction loops: 1x 2000mm, 1x 4000mm
- injection loop: 1x 100mm

Tanks
- indicator reagents: 2x 250mL
- GOD: 1x 25mL
- waste: 1x 1000mL
- injection syringe: 1x 10mL

Dimensions and Weight

LxWxH: approx. 400x400x200mm
Weight: approx. 8kg

Required for Operation

230V, 50/60Hz, 1 phase or 120V, 60Hz/CSA, 1 phase

Scope of Delivery

1 experimental unit
3 beakers
1 waste tank
1 set of injection syringes
1 set of pump hoses
1 set of connecting elements
1 hose

Order Details

083.38001 CE 380.01 Flow Injection Analysis

G.U.N.T Gerätebau GmbH, Hanskampring 15-17, D-22885 Barsbüttel, Phone +49 (40) 67 08 54-0, Fax +49 (40) 67 08 54-42, E-mail sales@gunt.de, Web http://www.gunt.de
We reserve the right to modify our products without any notifications.

CE 584 Advanced Oxidation

*** Oxidation of organic substances with hydrogen peroxide (H_2O_2) and UV light**

*** Discontinuous operation with falling film reactor**

Technical Description

In water treatment oxidation processes are used to remove organic substances which are not biodegradable. If the oxidation is by hydroxyl radicals (OH radicals) it is called "advanced oxidation". A common method for forming hydroxyl radicals is the irradiation of hydrogen peroxide with UV light. CE 584 demonstrates this process using a discontinuous falling film reactor.

The falling film reactor consists of a transparent tube which is open at the bottom. At the top of the tube there is a circular channel. Using a pump the raw water enriched with hydrogen peroxide is transported from a tank into the channel. From here the water flows as a thin falling film along the inside wall of the tube back into the tank. This creates a closed water circuit. At the centre of the tube there is a UV lamp. By irradiation of the falling raw water with UV light hydroxyl radicals form from the hydrogen peroxide molecules. The hydroxyl radicals oxidate the organic non-biodegradable substances in the raw water. As protection against the radiation the UV lamp is fitted with a protective tube.

The flow rate and temperature of the water are continuously measured. The temperature is indicated digitally in the switch cabinet. Samples can be taken at the tank.

E.g. triethylene glycol dimethyl ether can be used to produce the raw water. Analysis technology is required to evaluate the experiments.

The well-structured instructional material sets out the fundamentals and provides a step-by-step guide through the experiments.

Learning Objectives / Experiments

- familiarisation with oxidation with hydrogen peroxide and UV light
- recording of degradation curves for the investigation of reaction kinetics
- influence of the hydrogen peroxide quantity on the process

CE 584 Advanced Oxidation

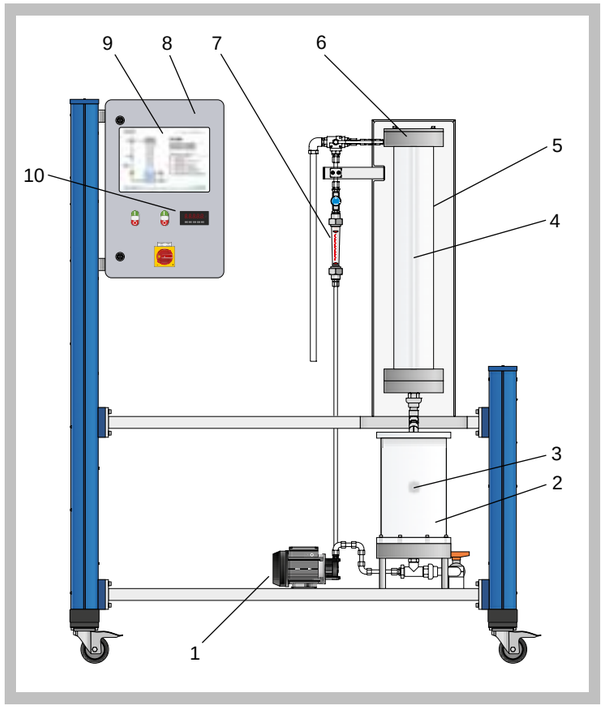

1 pump, 2 tank, 3 temperature sensor, 4 UV lamp with protective tube, 5 falling film reactor (tube), 6 channel, 7 flow meter, 8 switch cabinet, 9 process schematic, 10 digital temperature display

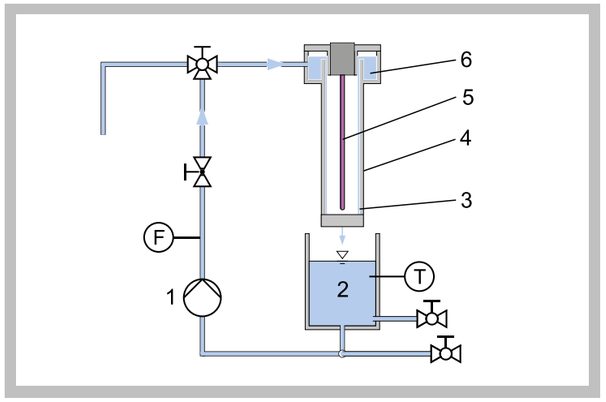

1 pump, 2 tank, 3 falling film, 4 falling film reactor (tube), 5 UV lamp, 6 channel; F flow rate, T temperature

Specification

[1] advanced oxidation process
[2] use of hydrogen peroxide and UV light
[3] formation of hydroxyl radicals (OH radicals)
[4] falling film reactor with UV lamp
[5] discontinuous operation
[6] flow rate adjustable
[7] measurement of temperature and flow rate
[8] digital temperature indication
[9] protection device against UV radiation

Technical Data

Falling film reactor (tube)
- diameter: 130mm
- height: 1000mm
- material: glass

UV lamp
- emitted wavelength: 254nm
- power: 120W

Pump
- max. flow rate: 360L/h
- max. head: 9m

Tank
- capacity: 10L

Measuring ranges
- flow rate: 30...320 L/h
- temperature: 0...50°C

Dimensions and Weight

LxWxH: 1510x790x1900mm
Weight: approx. 170kg

Required for Operation

230V, 50/60Hz, 1 phase or 120V, 60Hz, 1 phase
Water connection, drainage, hydrogen peroxide, triethylene glycol dimethyl ether (recommendation)

Scope of Delivery

1 trainer
2 buckets
2 beakers
1 set of instructional material

Order Details

083.58400 CE 584 Advanced Oxidation

2E a division of G.U.N.T Gerätebau GmbH, P.O.Box 1125, D-22885 Barsbüttel, t +49 (40)67 08 54-0, f +49 (40)67 08 54-42, E-mail sales@gunt.de
We reserve the right to modify our products without any notifications. Visit our Websites: www.gunt.de | www.gunt2e.de

6 BIOLOGICAL PROCESS ENGINEERING

INTRODUCTION

Overview	The GUNT Learning Concepts of Biological Process Engineering	354
Overview	Basic Knowledge Biological Processes and Reactors	356

AEROBIC PROCESSES

CE 701	Biofilm Process	358
CE 705	Activated Sludge Process	260
CE 730	Airlift Reactor	362

ANAEROBIC PROCESSES

Overview	CE 702 Anaerobic Water Treatment	364
CE 702	Anaerobic Water Treatment	366
Overview	CE 640 Biotechnical Production of Ethanol	368
CE 640	Biotechnical Production of Ethanol	370
Overview	Basic Knowledge Biogas Plant	372
CE 642	Biogas Plant	374

Agents and reactor types in biological process engineering

This chapter contains experimental units that are suitable to familiarise students with the agents (e.g. microorganisms) and their living conditions. There are different reactor types in biological process engineering that are used to create these conditions. The programme offers a variety of options to learn about the operating principle, the areas of application and the differences of the common reactor types.

Working with the trainers requires experience, care, a suitable laboratory environment and time. Depending on the corresponding process and the substances used, sealed floors, drainage systems, water or compressed air supply, ventilation, secure storage facilities for the substances and microorganisms used, safety devices and protective clothing are required.

For the analysis of many experiments you will need professional analysis systems. These are not included in the scope of delivery of the GUNT training systems.

Please contact us. We will be happy to give advise.

Visit our website www.gunt.de

THE GUNT LEARNING CONCEPTS OF BIOLOGICAL PROCESS ENGINEERING

WHAT DOES BIOLOGICAL PROCESS ENGINEERING DEAL WITH?

Biological process engineering deals with biological mass transformation. The following agents carry out this mass transformation:

- complete living organisms with one or a few cells, such as bacteria, fungi or algae
- biologically active, isolated components of organisms, such as animal or plant cells
- biologically active, isolated components of cells, such as enzymes

Biological process engineering has to create optimal conditions for these organisms, cells and cell components. The scientific findings from the areas of biology, biochemistry, etc. are implemented in industrial-scale processes. Examples of typical processes are:

- production of drugs
- production of chemicals
- production of food
- decontamination of soil, air and wastewater
- production of biomass energy sources

HOW CAN THE BIOLOGICAL PROCESSES BE CLASSIFIED?

An important distinguishing factor for biological processes is whether the microbiological processes take place under aerobic or anaerobic conditions. Biological process engineering has the task of creating the best possible ambient conditions for the respective microorganisms. In the case of fastidious anaerobic microorganisms this is the absence of oxygen. For aerobic microorganisms, on the other hand, an adequate and constant supply of oxygen must be ensured.

In the case of aerobic metabolism, the energy gain of the microorganisms is higher than during anaerobic metabolism. The aerobic microorganisms reproduce more quickly accordingly and there is more biomass.

Examples of agents in biological process engineering:
A Aspergillus niger: mould fungus used for the production of citric acid, B Escherichia coli: bacterium for the production of insulin, C Saccharomyces cerevisiae: yeast for the production of ethanol

The biological process…		…and the appropriate GUNT unit
Aerobic Processes	▶	CE 701 *Biofilm Process*
	▶	CE 705 *Activated Sludge Process*
	▶	CE 730 *Airlift Reactor*
Anaerobic Processes	▶	CE 702 *Anaerobic Water Treatment*
	▶	CE 640 *Biotechnical Production of Ethanol*
	▶	CE 642 *Biogas Plant*

Perfect conditions for microorganisms…

…and for students!

BASIC KNOWLEDGE

BIOLOGICAL PROCESSES AND REACTORS

Generally, a lot of different processes exist in process engineering. Each process is based on agents such as organisms, cells or enzymes. The respective agents are selected based the desired products and starting substances. The knowledge which agents are suitable for which application comes from basic disciplines like biology, biochemistry, etc. The knowledge which ambient conditions are ideal for the agents in order to guarantee a high quality and quantity of the products also comes from these disciplines. The respective production process is developed based on this information. The individual steps are similar for many processes and their sequence.

Basic process steps

The starting substances are also called substrates. They can be pure substances such as sugar or alcohol. Often these substances first have to be gained from substrates such as molasses, spent mash, etc. and made available for the biological agents, for example by comminution.

Water, salts and nutrients are then added to achieve the best fermentation medium for the agents. The pH value often plays an important role in this process.

Many biological processes require the specific exclusion of foreign bacteria to hinder competing microorganisms and reactions. This means that the fermentation medium and the reactor have to be sterilised.

The actual production process (fermentation) takes place in the reactor, where agents such as organisms, cells and enzymes convert the starting substances to products. The reactor has to be exactly adjusted to the respective agents. In aerobic processes, for example, even distribution of oxygen in all areas is very important. Controlling the temperature by applying or dissipating heat is also important.

The fermentation medium leaving the reactor is a complex mixture in which the product is diluted or still in the form of cells. The solids are correspondingly separated by means of filtration, centrifugation or sedimentation. The cells are opened, for example, by mechanical force or osmotic pressure. Methods such as extraction, adsorption or precipitation are used for concentrating and purifying.

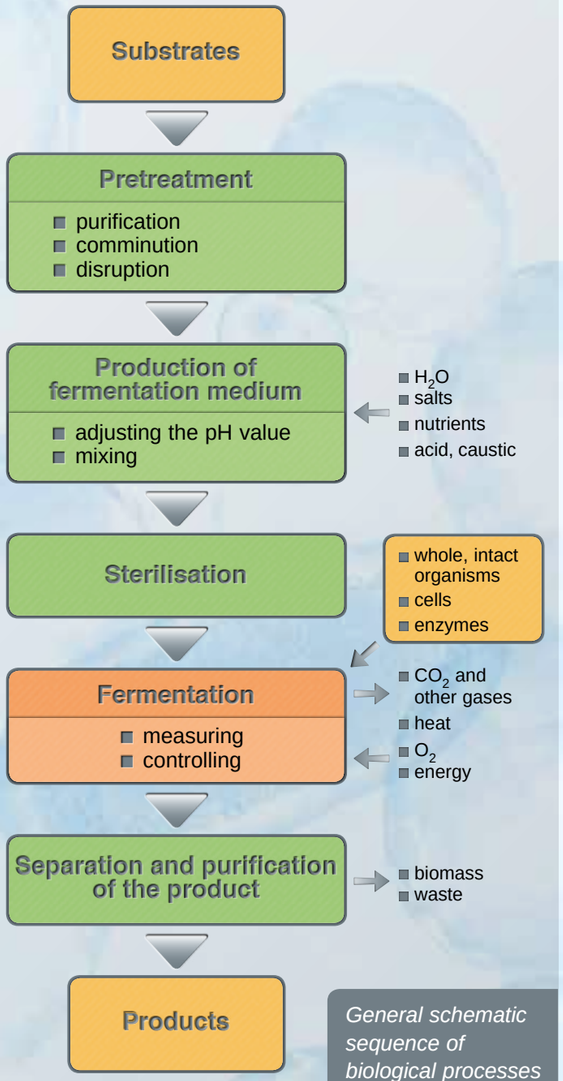

General schematic sequence of biological processes

BIOREACTORS

The bioreactor is the core element of a biotechnical production facility. One of its main tasks is optimal mixing of the reactor contents to guarantee frequent contact of the nutrients and biological agents. In addition, it is important that the interface formed between the gaseous phase and the liquid is as large as possible. In aerobic processes, oxygen is transported to the biological agents. In anaerobic methods, the quick removal of gases such as methane must be ensured. A general distinction is made between surface reactors and submerged reactors.

SURFACE REACTORS

The biological agents adhere to the surface of liquid or solid substances as a biofilm. In aerobic processes, the oxygen comes directly from the gaseous phase bordering on the biofilm.

The simplest process is the **static surface culture (A)**. In this process, a biofilm floats on the surface of a liquid substrate in a shallow dish, where it is supplied with nutrients from below and oxygen from above.

In bed reactors, the biofilm is fixed on a solid surface. In fluidised bed reactors, the solid can move freely in the liquid. In **fixed bed reactors (B)**, the solid does not move. The liquid substrate trickles through the fixed bed from above. In aerobic reactors, the oxygen is supplied from below.

SUBMERGED REACTORS

In contrast to surface reactors, the interface between the gaseous phase and the liquid must be maintained in submerged reactors by dispersing the gas in the liquid. For this purpose, energy must be continuously applied to the process. The energy can be applied in three ways:

- **Energy application by means of stirrers**

In aerobic processes, compressed air is fed into the **stirred tank reactor (C)**. A stirrer ensures fine dispersion of the air bubbles and distribution of the nutrients. High shear forces and the destruction of microorganisms can be a disadvantage.

- **Energy application by means of a fluid pump**

A pump recirculates the entire reactor contents through an external loop. There are several variants which differ by the location of the liquid intake and supply. In **jet reactors (D)**, the pump generates a propulsion jet which ensures recirculation in the reactor.

- **Energy application by means of gas**

The air bubbles themselves ensure recirculation of the reactor contents due to a density difference. The recirculation may take place inside or outside the reactor. In **airlift reactors (E)**, guiding devices ensure internal recirculation. Airlift reactors have lower shear forces and consume less energy than stirred tank reactors.

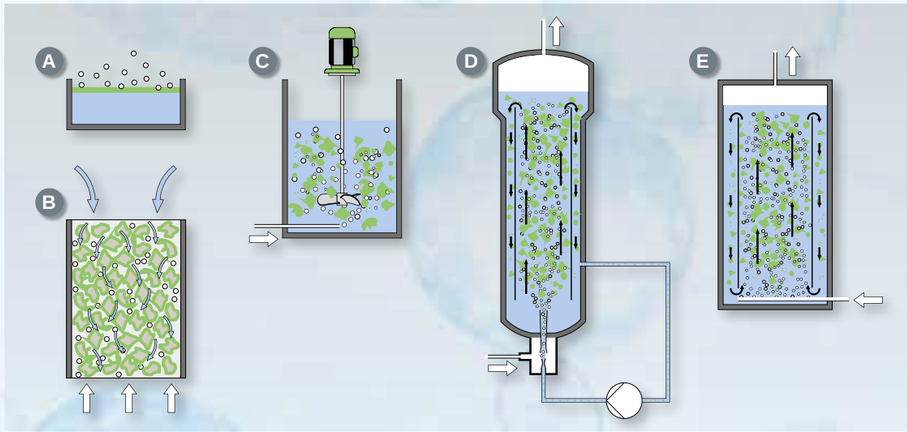

Surface reactors:
A static surface culture
B fixed bed reactor

Submerged reactors:
C stirred tank reactor
D jet reactor
E airlift reactor

CE 701 Biofilm Process

The illustration shows: Supply unit (left) and trainer (right)

*** Aerobic biofilm processes: trickling filter**
*** Practical experiments in laboratory scale**
*** Concentration profiles**

Technical Description

Fixed biofilm processes are used in the biological treatment of wastewater. Trickling filters are based on these processes.

A pump transports the wastewater from the supply unit to the upper end of the trickling filter. The wastewater drops down on the trickling filter using a rotary distributor. In the trickling filter there is a fixed bed consisting of special carrier material. On this carrier material there is a thin layer of microorganisms (biofilm). While the wastewater trickles through the fixed bed, the microorganisms clean the wastewater by biological processes. The degradation of organic substances preferably takes place in the upper region of the trickling filter. In the lower region on the other hand, the oxidation of ammonium to nitrate (nitrification) is the predominant process. Subsequently, the wastewater flows into a collecting tank. Two pumps deliver a portion of the collected wastewater to the rotary distributor again (recirculation).

In the lower region of the trickling filter there are openings to allow aeration by natural convection. Alternatively, aeration can take place with a compressor.

To produce the biofilm, the trickling filter is first filled with the carrier material, wastewater and activated sludge. The activated sludge continuously discharging from the trickling filter sediments into a secondary clarifier. A pump transports the activated sludge back to the trickling filter. The trickling filter is aerated by a compressor. Over time, microorganisms present in the activated sludge settle on the carrier material, thus producing the biofilm.

The following flow rates are recorded and can be adjusted: wastewater, recirculation, aeration (with compressor). The speed of the rotary distributor can also be adjusted. Sampling points on the trickling filter allow concentration profiles to be recorded.

Activated sludge from a wastewater treatment plant is required for the experiments. To analyse the experiments we recommend analytical equipment for determining the following parameters:
- biochemical or chemical oxygen demand
- ammonium concentration
- nitrate concentration

The well-structured instructional material sets out the fundamentals and provides a step-by-step guide through the experiments.

Learning Objectives / Experiments

- functional principle of a trickling filter
- recording of concentration profiles
- creation of a stable operating state
- identification of the following influencing factors
  * flow rate of recirculation
  * volumetric loading of the trickling filter
  * surface loading of the trickling filter
- comparison of various carrier materials

CE 701 Biofilm Process

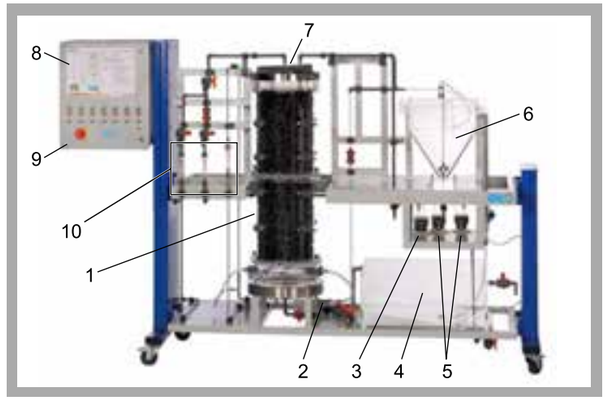

1 trickling filter, 2 compressor, 3 return sludge pump, 4 collecting tank, 5 circulation pumps, 6 secondary clarifier, 7 rotary distributor, 8 process schematic, 9 switch cabinet, 10 flow meter

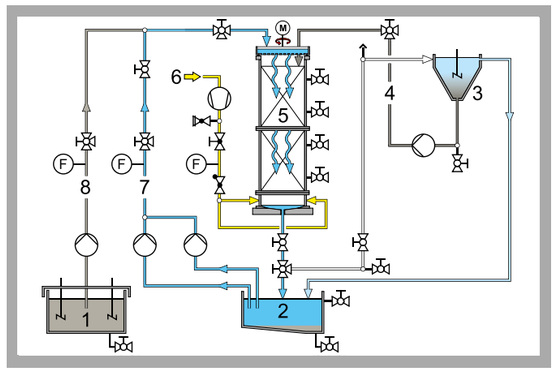

1 wastewater tank, 2 collecting tank, 3 secondary clarifier, 4 return sludge, 5 trickling filter, 6 air, 7 recirculation, 8 wastewater; F flow rate

carrier material for biofilm

Specification

[1] aerobic biofilm process for the degradation of organic substances and for nitrification
[2] transparent trickling filter with rotary distributor
[3] speed of the rotary distributor finely adjustable
[4] aeration of the trickling filter by natural convection or with compressor
[5] recording of concentration profiles is possible
[6] secondary clarifier with pump for transporting the return sludge
[7] all relevant flow rates finely adjustable
[8] separate supply unit with wastewater tank and two stirring machines
[9] two different carrier materials made of HDPE

Technical Data

Trickling filter
- diameter: approx. 340mm
- height: approx. 1000mm
- capacity: approx. 90L

Rotary distributor
- max. speed: approx. $2min^{-1}$

Tanks
- wastewater tank: 300L
- collecting tank: 90L
- secondary clarifier: 30L

Flow rates
- wastewater pump: max. 25L/h
- circulation pumps: 2x max. 25L/h
- return sludge pump: max. 25L/h
- compressor: max. 600L/h

Carrier material
- specific surface: 180 or $300m^2/m^3$

Measuring ranges
- flow rate (wastewater): 2...25L/h
- flow rate (recirculation): 5...65L/h
- flow rate (aeration): 50...900L/h

Dimensions and Weight

LxWxH: 1550x790x1150mm (supply unit)
LxWxH: 2870x790x1900mm (trainer)
Total weight: approx. 500kg

Required for Operation

230V, 50/60Hz, 1 phase or 120V, 60Hz/CSA, 1 phase
Water connection, drainage, activated sludge and substances for preparation of artificial wastewater

Scope of Delivery

1 trainer
1 supply unit
1 set of hoses
1 set of tools
1 cleaning brush
2 packing units of carrier material
1 set of instructional material

Order Details

083.70100 CE 701 Biofilm Process

2E a division of G.U.N.T Gerätebau GmbH, P.O.Box 1125, D-22885 Barsbüttel, t +49 (40)67 08 54-0, f +49 (40)67 08 54-42, E-mail sales@gunt.de
We reserve the right to modify our products without any notifications. Visit our Websites: www.gunt.de | www.gunt2e.de

CE 705 Activated Sludge Process

The illustration shows: Trainer (left) and supply unit (right)

*** Wastewater treatment plant in laboratory scale**

*** Aerobic biological degradation of organic substances**

*** Nitrification and pre-denitrification**

Technical Description

The activated sludge process is the most important biological process in water treatment. CE 705 enables this process to be demonstrated.

A pump delivers raw water contaminated with dissolved organic substances (organic matter) into the aeration tank. Aerobic microorganisms (activated sludge) in the aeration tank use the organic matter as a source of nutrition, biodegrading it in the process. Since aerobic microorganisms need oxygen, the raw water is aerated in the aeration tank. The activated sludge is mixed with the raw water by stirring machines. In the secondary clarifier the activated sludge is then separated from the treated water by sedimentation. A portion of the activated sludge is returned to the aeration tank (return sludge). The treated water is collected in a tank.

It is also possible to convert ammonium into nitrate (nitrification) and nitrate into nitrogen (denitrification). For denitrification a zone without aeration can be created in the aeration tank by installing a partition wall.

The following flow rates are adjustable: raw water, return sludge, internal recirculation for pre-denitrification and air. Oxygen concentration, pH value and temperature can be contolled.

A software program is provided to display the operation states and measure data. A process schematic shows the current operating states of the individual components and the measured data.

Samples can be taken at all relevant points. Activated sludge from a wastewater treatment plant and analysis technology are required for the experiments. Recommended parameters are:
- BOD_5 (biochemical oxygen demand)
- COD (chemical oxygen demand)
- NH_4 (ammonium)
- NO_3 (nitrate)

The well-structured instructional material sets out the fundamentals and provides a step-by-step guide through the experiments.

Learning Objectives / Experiments

- learning the fundamental principle of the activated sludge process
- functional principle of nitrification and pre-denitrification
- creation of a stable operating state
- identification of the following influencing factors
  * return sludge ratio
  * return ratio of the internal recirculation
  * sludge age
  * sludge loading
  * volumetric loading
  * oxygen concentration, pH value and temperature
- efficiency of the pre-denitrification

CE 705 Activated Sludge Process

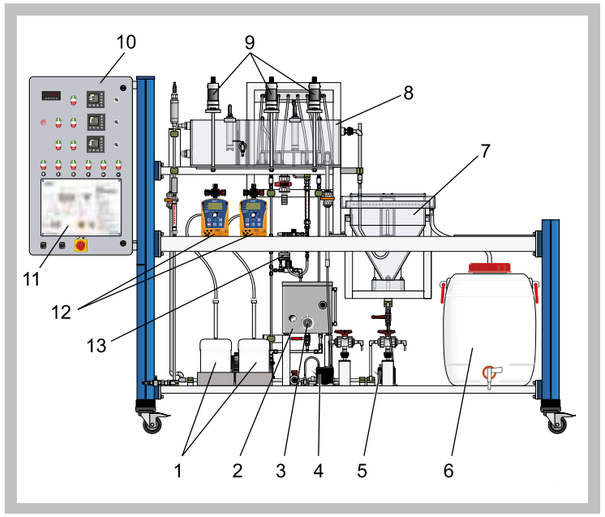

1 tanks for acid and caustic, 2 heating water tank, 3 heater, 4 circulation pump, 5 return sludge pump, 6 treated water tank, 7 secondary clarifier, 8 aeration tank, 9 stirring machines, 10 switch cabinet, 11 process schematic, 12 metering pumps, 13 compressor

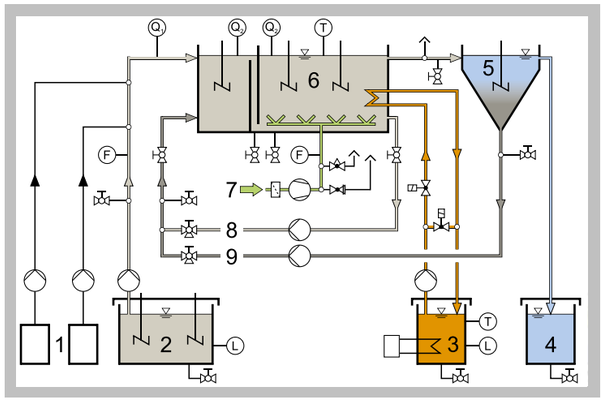

1 acid and caustic, 2 raw water, 3 heating water, 4 treated water, 5 secondary clarifier, 6 aeration tank, 7 air, 8 internal recirculation for pre-denitrification, 9 return sludge; F flow rate, L level, Q_1 pH value, Q_2 oxygen concentration, T temperature

Specification

[1] biological wastewater treatment
[2] aeration tank with 3 stirring machines
[3] secondary clarifier
[4] nitrification and pre-denitrification
[5] separate supply unit with 2 stirring machines
[6] all relevant flow rates adjustable
[7] control of temperature, pH value and oxygen concentration
[8] measurement of flow rate, temperature, pH value and oxygen concentration
[9] GUNT software with display of the operation states and data acquisition via USB under Windows Vista or Windows 7
[10] visual inspection with webcam on PC

Technical Data

Aeration tank
- capacity nitrification zone: approx. 34L
- capacity denitrification zone: approx. 17L

Tanks
- secondary clarifier: 30L
- raw water tank: 200L
- treated water tank: 80L

Flow rates
- raw water pump: max. 25L/h
- return sludge pump: max. 25L/h
- circulation pump: max. 25L/h

Speeds (stirring machines)
- secondary clarifier: max. $45min^{-1}$
- all others: each max. $600min^{-1}$

Measuring ranges
- flow rate (raw water): 2...25L/h
- flow rate (compressed air): 50...550L/h
- temperature: 0...40°C
- pH value: 0...14
- oxygen concentration: 0...10mg/L

Dimensions and Weight

LxWxH: 1550x790x1150mm (supply unit)
LxWxH: 2830x790x1900mm (trainer)
Weight: approx. 450kg

Required for Operation

230V, 50/60Hz, 1 phase or 120V, 60Hz, 1 phase
Water connection, drainage, activated sludge, substances for preparation of artificial wastewater, caustic soda, hydrochloric acid

Scope of Delivery

1 trainer
1 supply unit
1 set of hoses
1 GUNT software CD + USB cable
1 webcam
1 measuring cup
1 stopwatch
1 beaker
1 set of instructional material

Order Details

083.70500 CE 705 Activated Sludge Process

2E a division of G.U.N.T Gerätebau GmbH, P.O.Box 1125, D-22885 Barsbüttel, t +49 (40)67 08 54-0, f +49 (40)67 08 54-42, E-mail sales@gunt.de
We reserve the right to modify our products without any notifications. Visit our Websites: www.gunt.de | www.gunt2e.de

CE 730 *Airlift Reactor*

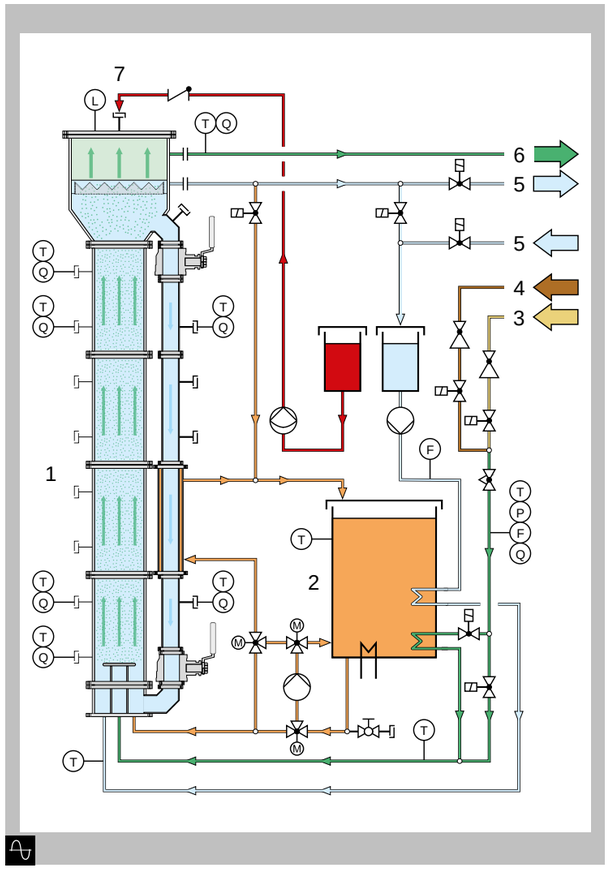

1 airlift reactor, 2 water tank, 3 compressed air, 4 nitrogen, 5 water, 6 exhaust air, 7 indicator; E conductivity, F flow rate, P pressure, Q analysis

*** Aerobic submerged reactor**

Technical Description

In the airlift reactor, air bubbles mix the reactor contents. At the same time, the air bubbles serve to supply oxygen to the microorganisms.

Compressed air enters the reactor at the bottom and ascends as small air bubbles. Part of the oxygen contained in the air is dissolved into the water in this process. The water moves upwards due to the lower density of the air/water mixture. The air bubbles leave the water at the head of the reactor. Due to the higher density, the water with the dissolved oxygen sinks again in the outer part of the reactor. The speed is adjusted via the flow rate of the air. Nitrogen can be used to remove oxygen from the water. This is required in order to be able to determine the mass transfer coefficient of oxygen in water.

Learning Objectives / Experiments

Influence of the superficial gas velocity on:
* gas content
* mass transfer coefficient
* mixing time and superficial fluid velocity

Specification

[1] determination of important characteristic variables at the airlift reactor
[2] transparent airlift reactor with outer recirculation
[3] compressed air for generation of air bubbles to recirculate the reactor contents
[4] adjustment of the superficial gas velocity via a valve and mass flow controller
[5] nitrogen to remove the oxygen from the reactor content
[6] determination of the superficial liquid velocity via the conductivity
[7] determination of the mixing time with indicator and colour change method
[8] sensor for measuring the conductivity, oxygen concentration, pressure and flow rate
[9] GUNT software for data acquisition via USB under Windows Vista or Windows 7

Technical Data

Airlift reactor
- diameter of outer tube: approx. 190mm
- diameter of inner tube: approx. 60mm
- height: approx. 2000mm

Measuring ranges
- conductivity: 4x 0...100mS/cm
- oxygen concentration: 3x 0...10mg/L
- pressure: 0...3bar

Dimensions and Weight

LxWxH: approx. 1500x790x2400mm
Weight: approx. 200kg

Required for Operation

230V, 50Hz, 1 phase
Compressed air connection, nitrogen gas cylinder with pressure reducing valve

Scope of Delivery

1 trainer
1 set of hoses
1 GUNT software CD + USB cable
1 stopwatch
1 set of instructional material

Order Details

083.73000 CE 730 Airlift Reactor

2E a division of G.U.N.T Gerätebau GmbH, P.O.Box 1125, D-22885 Barsbüttel, t +49 (40)67 08 54-0, f +49 (40)67 08 54-42, E-mail sales@gunt.de
We reserve the right to modify our products without any notifications.
Visit our Websites: www.gunt.de | www.gunt2e.de

INSTRUCTIONAL MATERIAL AND SOFTWARE

GUNT's policy is:
High-quality hardware and clearly laid-out instructional materials ensure the teaching and learning success of an experimental unit. The core elements of the instructional material provided to accompany the units are reference experiments conducted by ourselves. The description of the experiment incorporates the detailed set-up, through to interpretation of the results obtained. A group of experienced engineers devise and maintain the accompanying instructional material.

Our software – in our context meaning computerised data acquisition programs – always comes with comprehensive online help to explain the features offered the detailed use of the program. GUNT software is developed and written in-house by another group of experienced engineers.

CE 702 ANAEROBIC WATER TREATMENT

A laboratory system for education and research

- two different types of reactors with temperature control
- three different operation modes
- UASB reactor with control of pH-value
- GUNT software for data acquisition

Stirred tank with secondary clarifier

UASB reactor

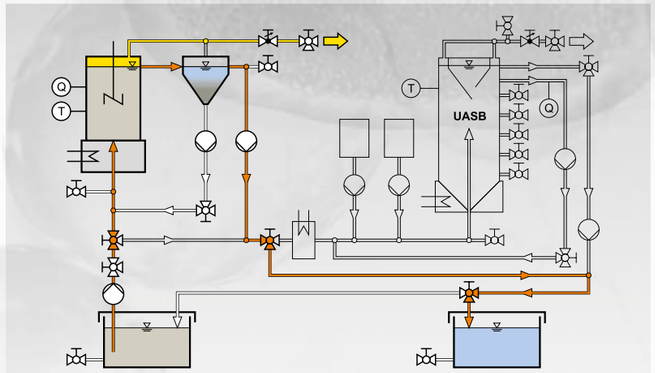

Operation mode 1 (1 stage):
- ☑ Stirred tank with secondary clarifier
- ☐ UASB reactor

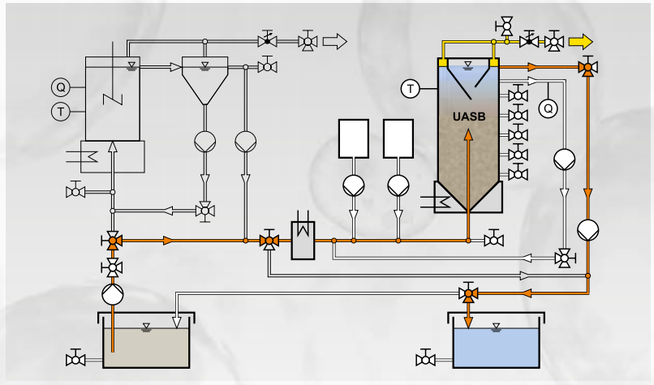

Operation mode 2 (1 stage):
- ☐ Stirred tank with secondary clarifier
- ☑ UASB reactor

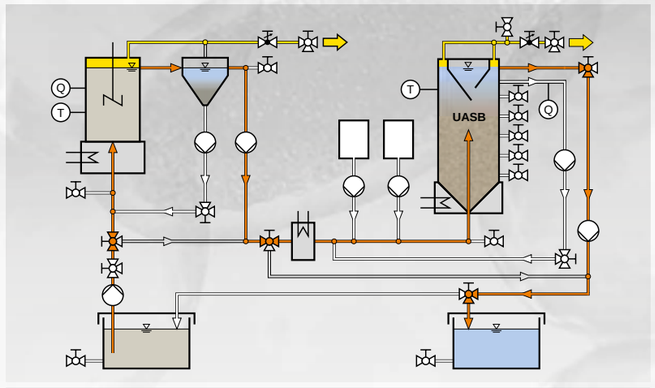

Operation mode 3 (2 stages):
- ☑ Stirred tank with secondary clarifier
- ☑ UASB reactor

Supply unit

Trainer

THE UASB PRINCIPLE

Upflow Anaerobic Sludge Blanket

The UASB reactor is a reactor type that is frequently used in anaerobic water treatment.

The reactor contains a sludge blanket which consists of anaerobic micro-organisms in the form of pellets. These pellets are an essential characteristic of the UASB principle. The reactor is flowed through from the bottom to the top.

Biogas which mainly consists of methane and carbon dioxide is produced during the anaerobic degradation. A separation system is installed at the top of the UASB reactor. It separates biogas from treated water. In addition it guarantees that the pellets (biomass) remain in the reactor.

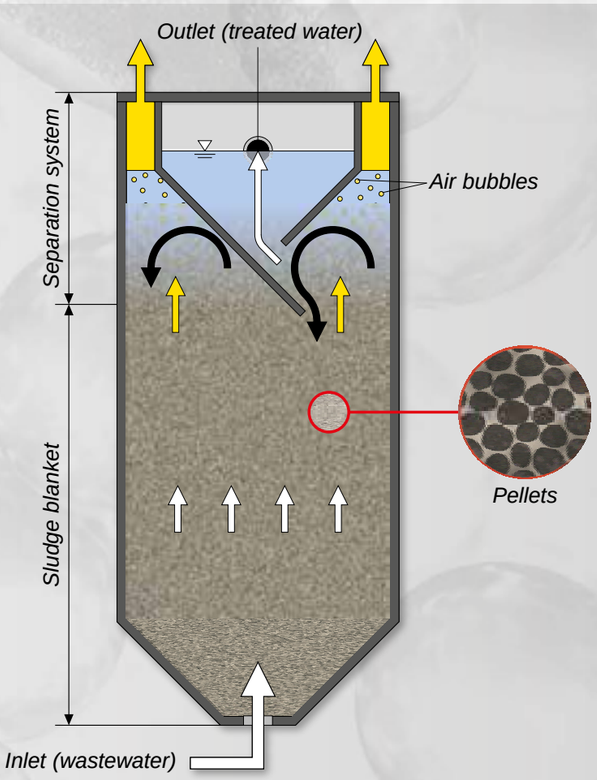

- Biogas
- Sludge blanket
- Treated water

CE 702 Anaerobic Water Treatment

The illustration shows: Supply unit (left) and trainer (right)

*** Anaerobic degradation of organic substances in the stirred tank and UASB reactor**

*** 3 different operation modes**

Technical Description

CE 702 demonstrates the biological anaerobic water treatment. The trainer consists basically of two units:
- stirring tank with secondary clarifier
- UASB reactor

Both units can be used separately or in combination. This allows both a single stage and a dual stage operation mode. In the dual stage operation a pump first transports the raw water into a stirred tank. In this tank the acidification of the organic substances dissolved in the raw water takes place. Here, anaerobic microorganisms convert the long-chain organic substances into short-chain organic substances. In a secondary clarifier the biomass discharged from the stirred tank is separated from the water. The separated biomass is pumped back into the stirring tank.

From the secondary clarifier the raw water pretreated in this manner reaches a UASB reactor (UASB: Upflow Anaerobic Sludge Blanket). Here the final step of the anaerobic degradation takes place. The previously formed short-chain substances are converted by special microorganisms into biogas (methane and carbon dioxide). Flow through the UASB reactor is from the bottom to the top. At the top of the UASB reactor there is a separation system. This separates the generated gas from the treated water. It also ensures that the biomass remains in the reactor. The gas can be discharged externally or collected. The treated water exits at the top end of the reactor and is collected in a tank.

To adjust the flow velocity in the UASB reactor a of the treated water can be recirculated.

The temperatures in the stirred tank and the UASB reactor can be controlled. The pH value in the stirred tank is measured. In addition, the pH value in the UASB reactor can be controlled. A software and webcam are available for data acquisition and visual inspection.

Anaerobic biomass and analysis technology are required to perform the experiments. Recommended parameters are: COD (chemical oxygen demand), nitrogen and phosphor.

The well-structured instructional material sets out the fundamentals and provides a step-by-step guide through the experiments.

Learning Objectives / Experiments

- familiarisation with anaerobic water treatment
- effects of temperature and pH value on anaerobic degradation
- functional principle of a UASB reactor
- comparison of single stage and dual stage operation mode
- monitoring and optimisation of the operating conditions
- identification of the following influencing factors
  * sludge loading
  * volumetric loading
  * flow velocity in the UASB reactor

CE 702 Anaerobic Water Treatment

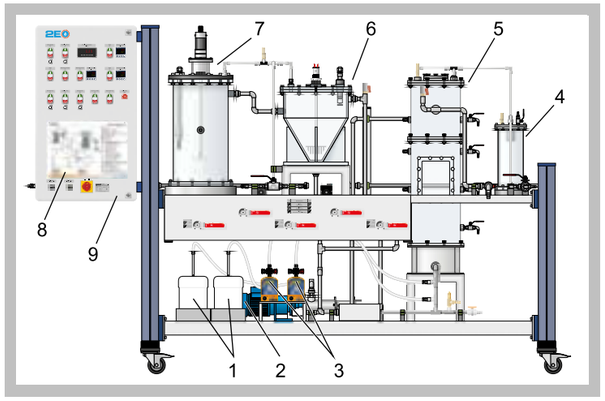

1 chemical tanks, 2 circulation pump, 3 metering pumps, 4 foam separator, 5 UASB reactor, 6 secondary clarifier, 7 stirred tank, 8 process schematic, 9 switch cabinet

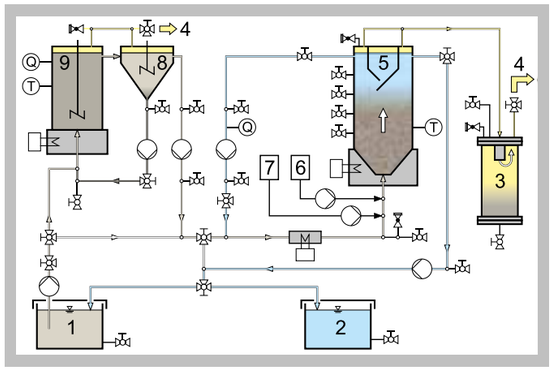

1 raw water, 2 treated water, 3 foam separator, 4 gas, 5 UASB reactor, 6 acid, 7 caustic, 8 secondary clarifier, 9 stirred tank;
T temperature, Q pH value

UASB reacor during experimental operation

Specification

[1] anaerobic degradation of organic substances
[2] stirred tank with secondary clarifier
[3] UASB reactor with separation system
[4] separate supply unit with tanks for raw water and treated water
[5] single stage or dual stage operation mode
[6] temperatures in the stirred tank and the UASB reactor can be controlled
[7] control of the pH value in the UASB reactor
[8] GUNT software for data acquisition via USB under Windows Vista or Windows 7
[9] visual inspection with webcam

Technical Data

Tanks
- stirred tank: 30L
- secondary clarifier: 30L
- UASB reactor: 50L
- tank for raw water: 180L
- tank for treated water: 180L

Flow rates (max.)
- raw water pump: 25L/h
- return sludge pump: 25L/h
- circulation pump: 100L/h
- metering pumps: 2x 2,1L/h

Measuring ranges
- pH value: 0...14
- temperature: 0...100°C

Dimensions and Weight

LxWxH: 1550x790x1150mm (supply unit)
LxWxH: 2830x790x1900mm (trainer)
Weight: approx. 520kg

Required for Operation

400V, 50/60Hz, 3 phases or 230V, 60Hz/CSA, 3 phases
Water connection, drain, sewage sludge, pellets from an UASB reactor, substances for preparation of artificial wastewater, caustic soda, hydrochloric acid

Scope of Delivery

1 trainer
1 supply unit
1 set of hoses
1 stopwatch
1 set of tools
1 GUNT software CD + USB cable
1 webcam
1 set of instructional material

Order Details

083.70200 CE 702 Anaerobic Water Treatment

2E a division of G.U.N.T Gerätebau GmbH, P.O.Box 1125, D-22885 Barsbüttel, t +49 (40)67 08 54-0, f +49 (40)67 08 54-42, E-mail sales@gunt.de
We reserve the right to modify our products without any notifications. Visit our Websites: www.gunt.de | www.gunt2e.de

CE 640 BIOTECHNICAL PRODUCTION OF ETHANOL

Developing the bioethanol production in the laboratory

The experimental plant for the biotechnical production of ethanol is ideally suited for training students and professionals in chemical and biochemical engineering. Bioethanol is, and will remain, the leading biofuel worldwide. Students will get to know the entire process, starting with the raw materials up to the end product.

The CE 640 “Biotechnical Production of Ethanol” experimental plant allows all of the important processes, from liquefaction and saccharification of the raw materials to the conversion of sugar into ethanol and to distillation, to be monitored and examined.

Learning Objectives

Necessary individual steps and plant components for the production of ethanol:

- gelatinisation by steam injection
- liquefaction by use of alpha-amylase
- saccharification by use of glucoamylase
- fermentation: conversion of sugar into ethanol by yeast cultures under anaerobic conditions
- distillation: separation of ethanol from the mash

Adding the raw materials into the mash tank — *Preparing the yeast* — *Adding the yeast into the fermentation tank*

AGRICULTURAL RESEARCH INSTITUTE
Nicosia/Cyprus

Dr. Polycarpos Polycarpou

Agricultural Research
Officer Head of Soils and Water Use Department
Agricultural Engineering
Agricultural Research Institute

TWO VERY SATISFIED CUSTOMERS

Fachhochschule Münster University of Applied Sciences

Institute of Chemical Engineering in Steinfurt

The laboratory for chemical engineering at Münster University of Applied Sciences (Germany) offers practical training courses in the production of ethanol with the CE 640. Two dates are scheduled for the course, so that all participants can prepare the mash and monitor the result of the fermentation and distillation process of their own experiments.

An interesting film and a brochure of the CE 640 are available on our 2E website, **www.gunt2E.de**

CE 640 Biotechnical Production of Ethanol

*** Practical process for production of ethanol from starch-based biological raw materials**

*** System control using a PLC, touch screen for display and operation**

*** PC aided data acquisition via USB interface**

Technical Description

As well as its great importance for the chemical and foodstuffs industries, ethanol (alcohol) is increasingly used as a fuel. The CE 640 can be used to conduct realistic experiments for the production of ethanol from starch-based raw materials such as potatoes. The experimental plant consists of three main components: a mash tank, a fermentation tank and a distillation unit.

A mixture of water, finely chopped potatoes and alpha-amylase (enzyme) is filled into the mash tank. To dissolve the tightly packed starch chains in the potatoes, heating steam is injected into the mixture via a nozzle (gelatinisation). This increases the flow resistance of the mash, which would prevent further processes. The alpha-amylase breaks up the starch chains (liquefying) thereby reducing the flow resistance. Gluco-amylase is used to convert the starch into sugar (saccharification). This enzyme requires lower temperatures and pH values. The temperature is reduced using the water cooling jacket around the mash tank, the pH value is adjusted by the addition of acid and caustic. After saccharification the mash is pumped into the fermentation tank. During the fermentation process in this tank, ethanol is produced. A water cooling system controls the temperature. After the fermentation process, the mash is pumped into the distillation unit. This is equipped with a bubble tray column for separation of the ethanol. Two tanks are available, one for the spent mash, the other for the distilled ethanol.

The experimental plant has comprehensive measurement, control and operating functions, which are controlled via a PLC. A touch screen displays measured values and permits the operation of the system.

The steam supply occurs via laboratory network or an optionally available electrical steam generator (CE 715.01).

The well-structured instructional material sets out the fundamentals and provides a step-by-step guide through the experiments.

Learning Objectives / Experiments

- familiarization with the necessary individual steps and system components for production of ethanol:
  * gelatinisation by steam injection
  * liquefaction by use of alpha-amylase
  * saccharification by use of gluco-amylase
  * fermentation: conversion of sugar into ethanol by yeast cultures under anaerobic conditions
  * distillation: separation of ethanol from the mash

CE 640 Biotechnical Production of Ethanol

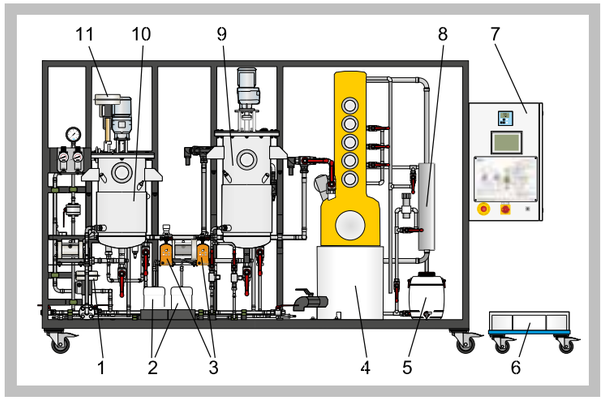

1 cooling water control valve, 2 acid/caustic tanks, 3 acid/caustic pumps, 4 distillation unit, 5 product tank, 6 spent mash tank (mobile), 7 switch cabinet, 8 condenser, 9 fermentation tank, 10 mash tank, 11 steam pressure control valve

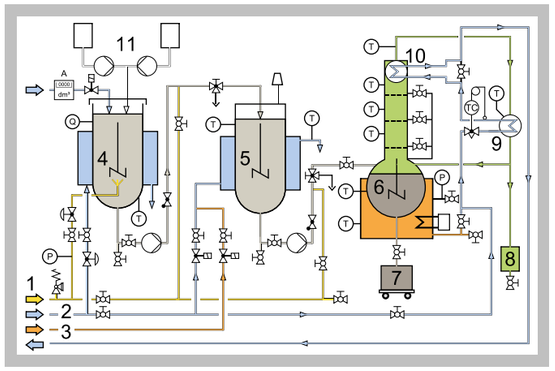

1 heating steam, 2 cooling water, 3 heating water, 4 mash tank, 5 fermentation tank, 6 distillation unit, 7 spent mash tank, 8 product tank, 9 condenser, 10 dephlegmator, 11 acid/caustic pumps and tanks; P pressure, T temperature, A water quantity, Q pH value

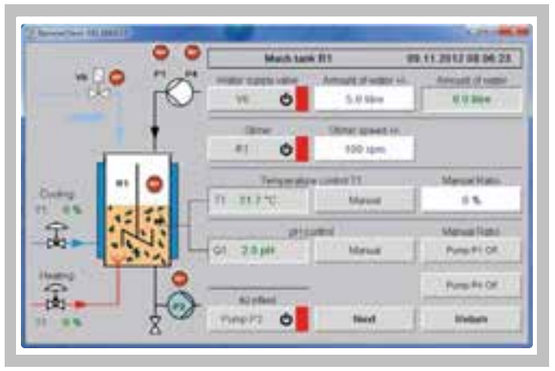

Screenshot of the touch screen for the PLC control unit

Specification

[1] batch conversion of starch-based raw materials into ethanol
[2] open mash tank with water-jacket cooling, steam injection and stirrer
[3] closed fermentation tank with stirrer and water-jacket cooling/heating
[4] distillation unit with 3 bubble trays, dephlegmator, condenser and stirrer
[5] 2 pumps for delivering the mash
[6] pH value control in the mash tank with acid and caustic delivered by metering pumps
[7] adjustment of the amount of injected heating steam, the cooling water flow rates and the head temperature by means of PID controllers
[8] system control using a PLC; operated by touch screen
[9] GUNT software for data acquisition via USB under Windows Vista or Windows 7

Technical Data

Mash tank: 40L
Fermentation tank: 50L
Product tank: 10L
Spent mash: 30L
Distillation unit
- column: DxH: 220x1200mm
- sump capacity: 45L
- sump heater: 0...7500W

2 air-operated diaphragm pumps
- drive pressure: 2bar
- max. flow rate: 15L/min
- max. head: 20m
- max. solid lump size: 4mm

2 metering pumps (acid and caustic)
- max. flow rate: each 2,1L/h

Measuring ranges
- temperature: 10x 0...150°C
- water quantity mash tank: 0...20L
- pH value: 2...10
- pressure heating steam: 0...10bar

Dimensions and Weight

LxWxH: 3500x1200x2000mm
Weight: approx. 500kg

Required for Operation

400V, 50Hz, 3 phases or 230V, 60Hz, 3 phases
compressed air (1,5...6bar), cooling water (min. 400L/h), steam (15kg/h, min. 3bar), heating water (min. 400L/h, 40°C)

Scope of Delivery

1 experimental plant
1 set of enzymes etc.
1 areometer
1 set of accessories
1 GUNT software CD + USB cable
1 set of instructional material

Order Details

083.64000 CE 640 Biotechnical Production of Ethanol

2E a division of G.U.N.T Gerätebau GmbH, P.O.Box 1125, D-22885 Barsbüttel, t +49 (40)67 08 54-0, f +49 (40)67 08 54-42, E-mail sales@gunt.de
We reserve the right to modify our products without any notifications. Visit our Websites: www.gunt.de | www.gunt2e.de

BASIC KNOWLEDGE

BIOGAS PLANT

Rising energy requirements and the limited availability of fossil energy sources make new energy supply concepts necessary. Energy production from biomass plays an important role in future energy concepts besides solar and wind energy.

In a biogas plant, microorganisms biologically degrade the organic starting substances (substrate) under exclusion of light and oxygen. The product of this anaerobic degradation is a gas mixture which primarily consists of methane. This gas mixture is called biogas.

The complex processes of anaerobic degradation can be simplified as four consecutive phases.

Phase 1: Hydrolysis

The substrate used in biogas plants is available as undissolved, high-molecular compounds such as proteins, fats and carbohydrates. Therefore these compounds first have to be broken down into their individual components. Hydrolysis products are amino acids, sugars and fatty acids.

Phase 2: Acidification

The hydrolysis products are then biochemically decomposed further, primarily into propionic acid, butyric acid, acetic acid, alcohols, hydrogen and carbon dioxide.

Phase 3: Formation of acetic acid

The products of the previous phase are now converted into acetic acid, hydrogen and carbon dioxide.

Phase 4: Formation of methane

Methanogens can use either acetic acid (CH_3COOH) or carbon dioxide and hydrogen for their metabolism. So methane (CH_4) can be produced in the following two reactions:

$$CH_3COOH \longrightarrow CH_4 + CO_2$$

$$4H_2 + CO_2 \longrightarrow CH_4 + 2H_2O$$

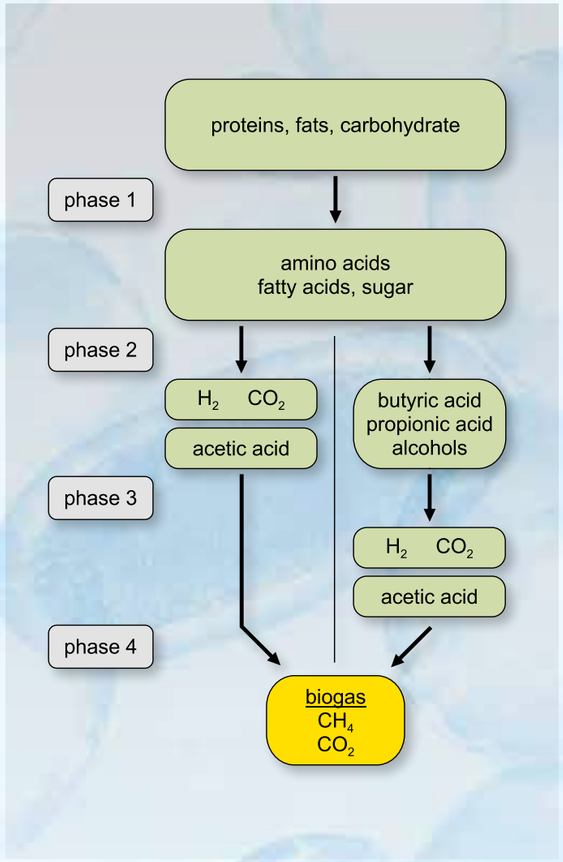

Fundamental principle of anaerobic degradation

Use of biogas

The biogas produced can now be combusted in a combined heat and power plant. This converts the energy stored in the biogas to mechanical energy. A connected generator then converts this mechanical energy into electric power. In addition to electrical energy, a combined heat and power plant also produces heat which can, for example, be used to heat the reactor or buildings.

How a biogas plant works:

1 slurry from livestock husbandry
2 renewable raw materials (e.g. maize)
3 storage for shredded raw materials
4 storage for feeding the bioreactor
5 bioreactor (fermenter)
6 storage for digestate
7 biogas treatment
8 combined heat and power plant
9 water circuit to heat the bioreactor
10 feed of the current into the public power grid
11 digestate (use as fertilizer)

Ambient conditions

The microorganisms involved in the anaerobic degradation have different requirements regarding the ambient conditions. This applies primarily to the pH value and the temperature. Especially methanogens are very sensitive to deviations of these two process variables from their respective optimal value.

If all 4 phases of the degradation take place in one reactor, a compromise regarding the pH value and temperature needs to be found. This results in a lower biogas yield. From a process engineering point of view, a two-stage process in two separate reactors is more practical as this enables the ambient conditions to be adjusted more specifically to the respective bacteria.

Parameter	Phases 1+2	Phases 3+4
pH-value	5,2…6,3	6,7…7,5
Temperature	25…35°C	35…60°C

Optimal ambient conditions for anaerobic degradation

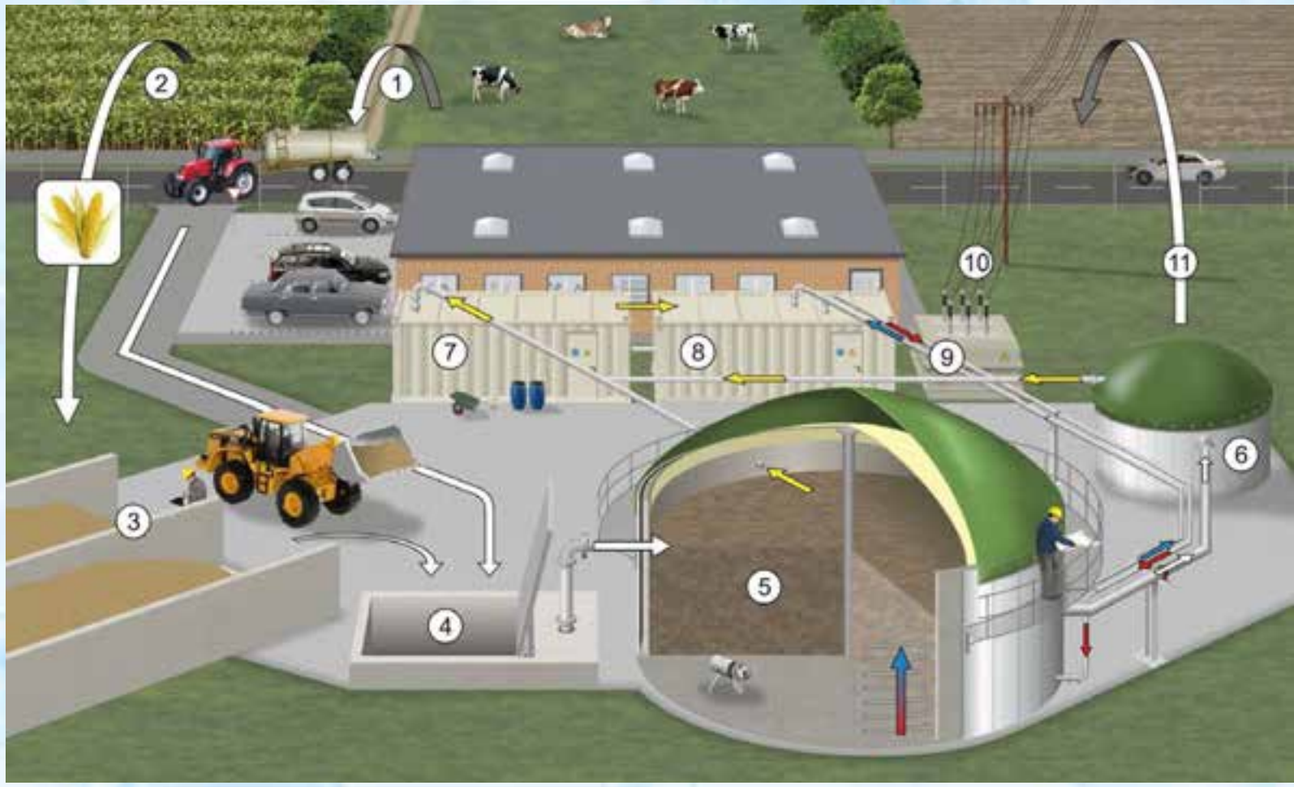

CE 642 Biogas Plant

The illustration shows from left to right: supply unit, trainer and post-fermentation unit

*** Two-stage biogas plant**

*** Extensive biogas analysis**

*** System control using a PLC, touch screen for display and operation**

Technical Description

In a biogas plant, microorganisms biologically degradate the organic starting substances (substrate) under exclusion of light and oxygen. The product of this anaerobic degradation is a gas mixture which primarily consists of methane. This gas mixture is called biogas.

The experimental plant CE 642 serves to demonstrate the generation of biogas in a practical manner. The substrate is a suspension of shredded organic solids. It is hydrolysed and acidified in the first stirred reactor. Here, anaerobic microorganisms convert the long-chain organic substances into short-chain organic substances. The biogas forms in the second stirred reactor in the last step of the anaerobic degradation. It contains mainly methane and carbon dioxide. This two-stage method enables the ambient conditions to be adjusted and optimised in both reactors separately. The digestate is collected in a separate tank.

Temperature and pH value are controlled in both reactors. The resulting biogas is dried in a column. The column is filled with silica gel. Subsequently, the flow rate, humidity, methane content, carbon dioxide content and temperature of the biogas are measured. The system is controlled by means of a PLC which is operated via a touch screen. The measured values can be transmitted to a PC via USB and analysed with the GUNT software.

The experimental plant enables both a continuous and a discontinuous (batch) operation mode. Anaerobic biomass from a biogas plant is required for the experiments. E.g. potatoes or maize can be used to produce the substrate. An inert gas (e.g. carbon dioxide) is required to flush the experimental plant.

The well-structured instructional material sets out the fundamentals and provides a step-by-step guide through the experiments.

Learning Objectives / Experiments

- achieving a stable operating state
- influence of the following parameters on the biogas generation
  * temperature
  * substrate
  * volumetric loading
  * pH value
- influence of the operation mode on the biogas yield
  * single stage or dual stage
  * with and without post-fermentation
  * continuous and discontinuous
- determining the following parameters depending on the operating conditions
  * biogas yield
  * biogas flow rate
  * biogas quality

CE 642 Biogas Plant

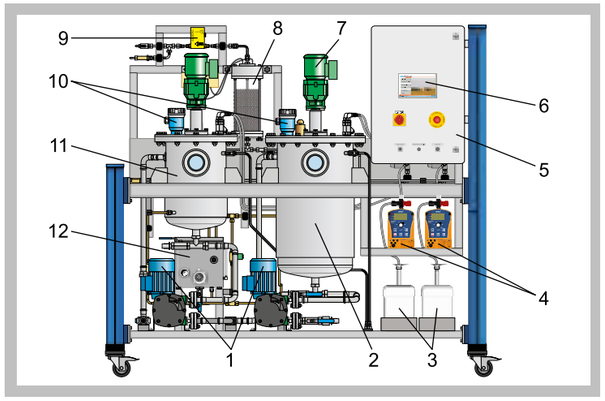

1 peristaltic pumps, 2 reactor (stage 2), 3 tanks for acid and caustic, 4 metering pumps, 5 switch cabinet, 6 PLC with touch screen, 7 stirring machine, 8 drying column, 9 flow meter (biogas), 10 capacitive level sensors, 11 reactor (stage 1), 12 heating water tank,

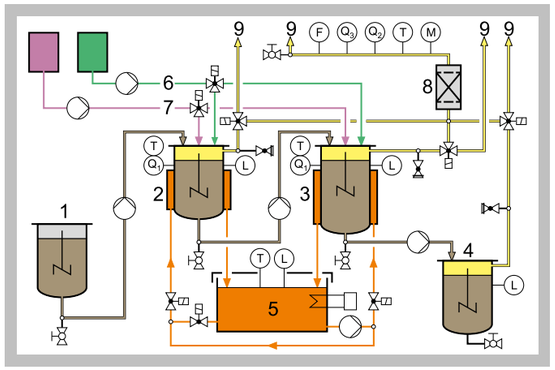

1 substrate tank, 2 reactor (stage 1), 3 reactor (stage 2), 4 digestate tank, 5 heating water, 6 acid, 7 caustic, 8 drying column, 9 biogas;
F flow rate, L level, M humidity, Q_1 pH value, Q_2 methane content, Q_3 carbon dioxide content, T temperature

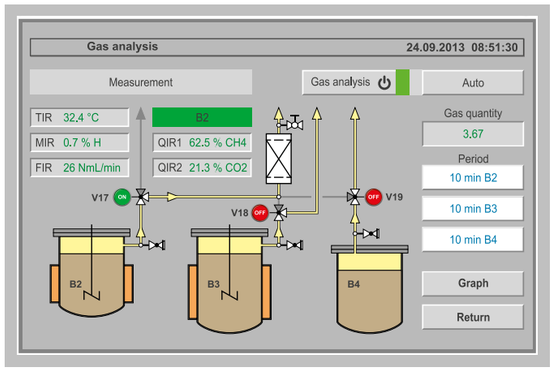

Operating interface of the PLC: menu item "gas analysis"

Specification

[1] two-stage biogas plant (continuous or discontinuous operation possible)
[2] 2 stirred reactors made of stainless steel with capacitive level sensors
[3] separate supply unit with substrate tank and feed pump
[4] control of temperature and pH value in the reactors
[5] 2 metering pumps for acid and caustic
[6] heating water circuit with tank, heater, temperature controller and pump
[7] biogas is dried with silica gel
[8] biogas analysis: flow rate, methane content, carbon dioxide content, humidity and temperature
[9] control of the experimental plant using a PLC, operated by touch screen
[10] GUNT software for data acquisition via USB under Windows Vista or Windows 7

Technical Data

Tanks made of stainless steel
- reactor (stage 1): approx. 20L
- reactor (stage 2): approx. 70L
- substrate tank: approx. 25L
- digestate tank: approx. 25L

Pumps
- 3 peristaltic pumps: each max. 25L/h
- 2 metering pumps: each max. 2,1 L/h
- heating water pump: max. 480L/h

Stirring machines
- substrate tank: max. 200min^{-1}
- reactors: each max. 120min^{-1}

Measuring ranges
- methane content: 0...100%,
- carbon dioxide content: 0...100%
- flow rate (biogas): 0…30NL/h
- pH value: 2x 1...14
- humidity: 0...100%
- temperature (reactors and biogas): 3x 0...100°C

Dimensions and Weight

LxWxH: 1100x790x1400mm (supply unit)
LxWxH: 2060x790x1910mm (trainer)
LxWxH: 1100x790x1400mm (post- fermentation unit)
Total weight: approx. 770kg

Required for Operation

400V, 50/60Hz, 3 phases or 230V, 60Hz, 3 phases
Biomass from a biogas plant, substrate (recommendation: potatoes or maize), caustic soda, hydrochloric acid, intert gas (e.g. carbon dioxide)

Scope of Delivery

1 experimental plant, 1 packing unit of silica gel,
1 set of accessories, 1 GUNT software CD,
1 USB cable, 1 set of instructional material

Order Details

083.64200 CE 642 Biogas Plant

2E a division of G.U.N.T Gerätebau GmbH, P.O.Box 1125, D-22885 Barsbüttel, t +49 (40)67 08 54-0, f +49 (40)67 08 54-42, E-mail sales@gunt.de
We reserve the right to modify our products without any notifications. Visit our Websites: www.gunt.de | www.gunt2e.de

7 WATER TREATMENT

INTRODUCTION

Overview	Unit Operations in Water Treatment	378
Overview	Basic Knowledge The Wastewater Treatment Plant	380

MECHANICAL PROCESSES

Overview	Basic Knowledge Floatation	382
Overview	Basic Knowledge Sedimentation	383
Overview	CE 587 Dissolved Air Flotation	384
CE 587	Dissolved Air Flotation	386
HM 142	Separation in Sedimentation Tanks	388
Overview	Basic Knowledge Filtration	390
Overview	CE 579 Depth Filtration	391
CE 579	Depth Filtration	392

BIOLOGICAL PROCESSES

Overview	Basic Knowledge Aerobic Processes	394
CE 701	Biofilm Process	396
CE 705	Activated Sludge Process	398
Brochure	CE 705 Activated Sludge Process	401
Overview	Basic Knowledge Anaerobic Processes	417
Overview	CE 702 Anaerobic Water Treatment	418
CE 702	Anaerobic Water Treatment	420

PHYSICAL / CHEMICAL PROCESSES

Overview	Basic Knowledge Adsorption	424
Overview	Basic Knowledge Membrane Separation Processes	425
Overview	CE 583 Adsorption	426
CE 583	Adsorption	428
CE 530	Reverse Osmosis	430
Overview	Basic Knowledge Ion Exchange	432
Overview	Basic Knowledge Precipitation / Flocculation	433
CE 300	Ion Exchange	434
Overview	CE 586 Precipitation and Flocculation	436
CE 586	Precipitation and Flocculation	438
Overview	Basic Knowledge Chemical Oxidation	441
CE 584	Advanced Oxidation	442

COMBINED PROCESSES

Overview	Basic Knowledge Combined Processes	444
CE 581	Water Treatment Plant 1	446
CE 582	Water Treatment Plant 2	448

Unit operations in water treatment

GUNT offers a complete range of units to learn the unit operations involved in water treatment.

Our units make it easier to understand the complex theoretical principles on which the processes are based. The use of mainly transparent materials also enables the processes to be observed. In many cases, our products feature data acquisition software to support effective learning.

Please note:

Your laboratory facilities must be suitable for operation of the units. Depending on the specific process and the materials used, sealed floors, drains, water and/or compressed air connections, ventilators, special foundations, secure material storage facilities etc. may be required.

To evaluate many of the experiments you will need professional analysis systems beyond the scope of the training system packages supplied by GUNT.

Please contact us. We will be happy to give advise.

All devices in this catalogue are a part of our new division
2E – ENERGY & ENVIRONMENT.
For further information about 2E please step to page 422 or visit our website ***www.gunt.de.***

Visit our website www.gunt.de

UNIT OPERATIONS IN WATER TREATMENT

What is water treatment?

Water is changed in its characteristics through domestic use or industrial processes. Used water (wastewater) can't be discharged directly to a watercourse. Wastewater must first be treated so that it no longer poses a hazard to the environment. If organically polluted wastewater enters a watercourse, microorganisms will degrade the organic matter, consuming large amounts of oxygen. This may reduce the oxygen level enough to kill fish.

Water treatment can also be used to make water usable for a specific purpose. Examples of this are the production of drinking water or process water in industry.

What unit operations are employed in water treatment?

There are a number of unit operations for water treatment. The choice of unit operations depends primarily on the substances needing to be removed.

The key unit operations can be classified accordingly as follows:

Undissolved Substances (Solids) Organic Inorganic	Dissolved Substances		
	Organic Substances		Inorganic Substances
	Biodegradable	Non-Biodegradable	
Mechanical Processes	Biological Processes	Physical/Chemical Processes	
■ Flotation ■ Sedimentation ■ Filtration	■ Aerobic Processes ■ Anaerobic Processes	■ Adsorption ■ Membrane Separation Processes ■ Ion Exchange ■ Precipitation / Flocculation ■ Chemical Oxidation	

Removal of undissolved substances (solids) is effected by mechanical processes. Dissolved substances can be removed by either biological or physical/chemical processes.

The aim of biological processes is to remove organic, biodegradable substances. Microorganisms use such substances as a source of nutrition, thereby degrading them. If this process takes place in the presence of dissolved oxygen, they are termed aerobic. They include the activated sludge process and biofilm process. Their main field of application is in the treatment of domestic wastewater by wastewater treatment plants. By contrast, anaerobic processes exclude oxygen. Anaerobic processes are used in the treatment of heavily organically polluted wastewater e.g. from industries like food processing and paper manufacturing.

Non-biodegradable organic and inorganic substances can be removed by means of physical/chemical processes. Examples of this are water softening by ion exchange and the adsorption of chlorinated hydrocarbons on activated carbon.

	The unit operations...		...and the appropriate GUNT unit
Mechanical Processes	Flotation	▶	CE 587 *Dissolved Air Flotation*
	Sedimentation	▶	HM 142 *Separation in Sedimentation Tanks*
	Filtration	▶	CE 579 *Depth Filtration*
Biological Processes	Aerobic Processes	▶ ▶	CE 701 *Biofilm Process* CE 705 *Activated Sludge Process*
	Anaerobic Processes	▶	CE 702 *Anaerobic Water Treatment*
Physical/Chemical Processes	Adsorption	▶	CE 583 *Adsorption*
	Membrane Separation Processes	▶	CE 530 *Reverse Osmosis*
	Ion Exchange	▶	CE 300 *Ion Exchange*
	Precipitation / Flocculation	▶	CE 586 *Precipitation and Flocculation*
	Chemical Oxidation	▶	CE 584 *Advanced Oxidation*

Combined unit operations...		...and the appropriate GUNT unit
Filtration Adsorption Ion Exchange	▶	CE 581 *Water Treatment Plant 1*
Filtration Ion Exchange	▶	CE 582 *Water Treatment Plant 2*

BASIC KNOWLEDGE

THE WASTEWATER TREATMENT PLANT

In a wastewater treatment plant, domestic wastewater is treated to enable it to be discharged back into a watercourse. The wastewater produced by private households is polluted largely by dissolved biodegradable substances. A wastewater treatment plant is essentially divided into the following sections:

- mechanical treatment
- biological treatment
- sludge treatment

Depending on the properties of the wastewater and the treated water quality requirements, further steps may be necessary, such as removal of phosphates.

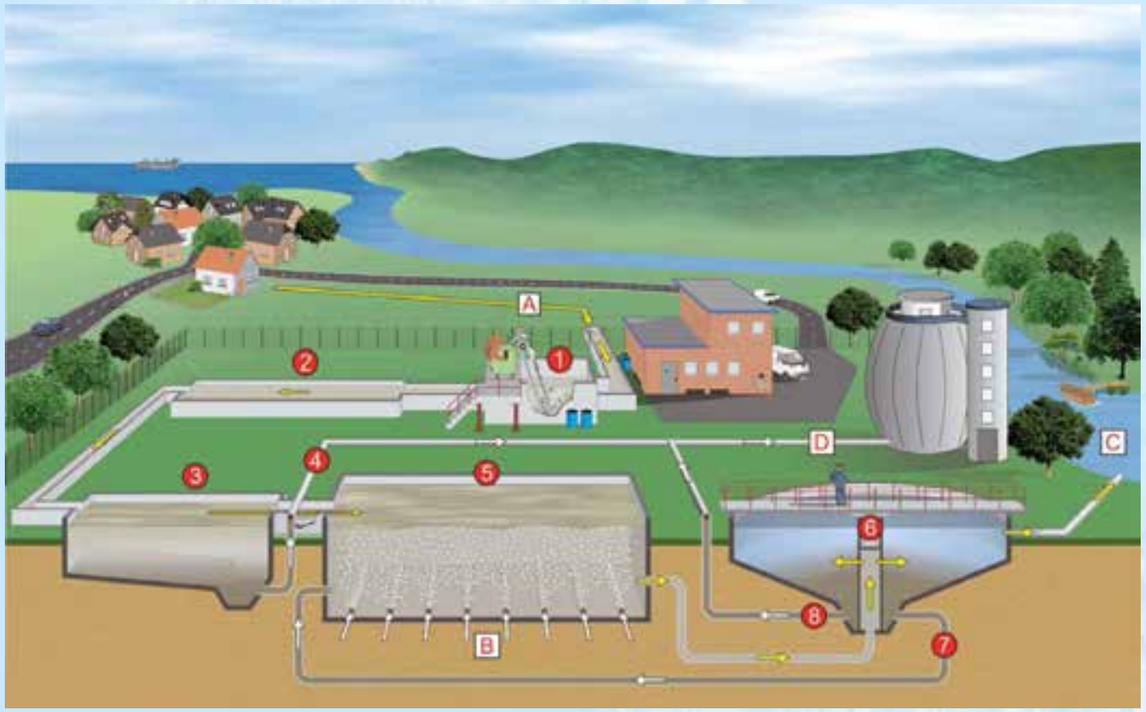

How a wastewater treatment plant works:

Mechanical treatment
1 *bar screen,* ***2*** *grit chamber,* ***3*** *primary clarifier,* ***4*** *primary sludge*

Biological treatment
5 *aeration tank,* ***6*** *secondary clarifier,* ***7*** *return sludge,* ***8*** *surplus sludge*
A *wastewater,* ***B*** *compressed air,* ***C*** *receiving water,* ***D*** *sewage sludge*

Mechanical treatment

In the first stage, suspended solids are mechanically removed from the wastewater. Initially, course materials such as pieces of wood, plastic bags and fabric are filtered out using a bar screen. Then the water flows into a grit chamber. In this sedimentation tank, mineral solids such as sand and gravel are separated by sedimentation.
Organic solids have a much lower settling velocity than sand and, consequently, a low velocity sedimentation step is required to separate them. This process stage is termed primary clarification and the solids which separate at this stage are termed primary sludge.

Biological treatment

Mechanical treatment is followed by biological treatment of the wastewater. The principle of biological treatment is the fact that microorganisms use the organic matter as a source of nutrition. In this way, they degrade the organic matter and remove it from the wastewater. The most frequently used method is the **activated sludge process.** In this process, organic matter is degraded by aerobic micro-organisms. In order to provide them with the necessary oxygen, the wastewater is aerated in the aeration tank. The products of the aerobic metabolism are biomass, water and carbon dioxide. The growing microorganisms form flocs – the so called “activated sludge” – which are continuously removed from the aeration tank together with the wastewater.

The activated sludge is separated, by means of sedimentation in the secondary clarifier. The treated water contains only small amounts of organic matter, and can be safely discharged into watercourse (receiving water).

More biomass is removed from the aeration tank than is produced in the same period of time. In order to balance out this loss of biomass in the aeration tank, part of the sludge separated in the secondary clarifier is returned to the aeration tank as “return sludge”.

Sludge treatment

The portion of the activated sludge which is not returned is termed “surplus sludge”. Together with the primary sludge from the primary clarification, it forms the sewage sludge. Sewage sludge is a waste product, and is treated by further processes.

Primary components of a wastewater treatment plant

Aeration tank

Secondary clarifier

BASIC KNOWLEDGE

FLOTATION

Suspended solids with a density close to or less than that of water can't be removed by sedimentation. Such solids would sediment only very slowly or would remain suspended. The aim of flotation is to increase the buoyancy of the solids. This is done by forming small gas bubbles that attach to the solids. This makes them rise to the surface of the water where they can be skimmed off. It is required that the solids should be hydrophobic. That means that they are more wettable with air than with water. The separated solids are termed float. The key factor influencing flotation is the size of the gas bubbles. The smaller they are the less will be their rate of rise. This is compensated by larger numbers of small gas bubbles attaching to the solids than large bubbles.

The main process used in water treatment is **dissolved air flotation.** Another flotation variant is electro-flotation. The two processes differ primarily in the way the gas bubbles are produced.

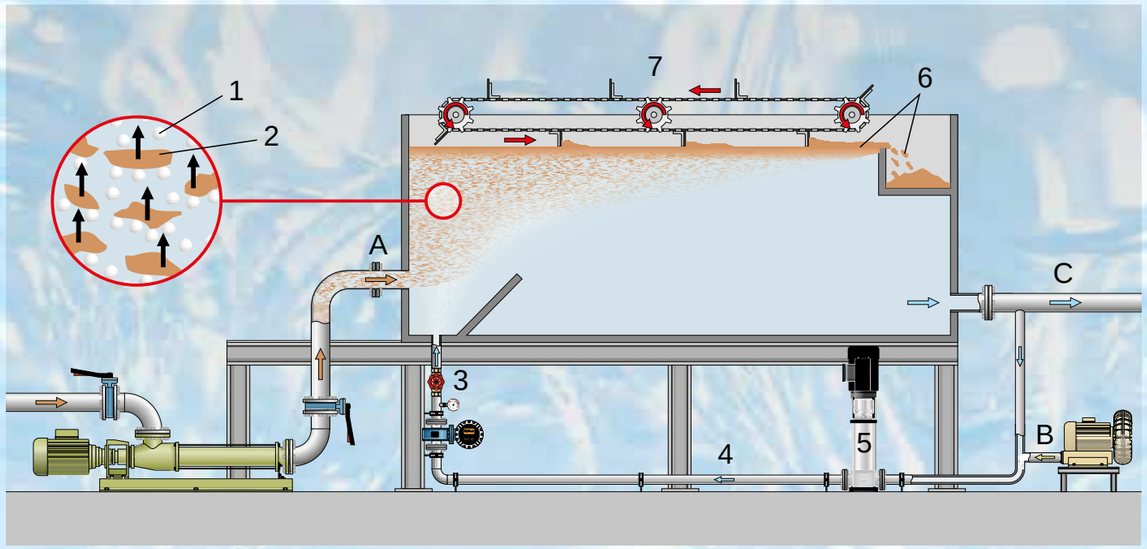

Fundamental principle of dissolved air flotation:
***1** air bubbles, **2** solids, **3** relief valve, **4** recycle water, **5** pump, **6** float, **7** scraper*
***A** raw water, **B** compressed air, **C** treated water*

Dissolved air flotation

Dissolved air flotation uses the fact that the solubility of air in water increases as the pressure rises at constant temperature. Some of the treated water is saturated with air under pressure (recycle water). The recycle water is then injected into the flotation tank through a special valve that causes an instantaneous reduction in pressure (relief valve). The sudden relief to atmospheric pressure causes the dissolved air to precipitate as a cloud of small bubbles. A scraper clears the float from the surface of the water. To improve the performance of the process, coagulants and flocculants may be added to the raw water. This helps to optimise the size of the solids so that more air bubbles can be attached to the solids.

Application examples

Industrial water treatment
- paper industry
- food industry
- oil refineries
- plastics industry

Domestic water treatment
- secondary clarification, if the activated sludge sediments very slow
- supplementing or replacing primary clarification

BASIC KNOWLEDGE

SEDIMENTATION

Mechanical process engineering in many cases utilises gravity to separate different phases. Gravity can be used to separate a solid phase off from a fluid. When solid particles are suspended in a fluid, gravity causes them to sink. For this to happen, the density of the solid must be greater than that of the fluid. The process is termed sedimentation. Fluid is the umbrella term for gases and liquids. It is used because most physical laws apply equally to both.

In terms of the **separation of solids from gases** the phrase "dust separation" is also used. The solid phase may, on the one hand, be a usable material, on the other hand, it may be an unwanted material (gas purification). In gravity separators the gas flow is routed at slower velocity through a separator channel. On their way, the particles sink and are collected.

In practice the **separation of solid/liquid mixtures** (suspensions) takes place in sedimentation tanks through which the suspension continuously flows. The shape of the base may be rectangular or circular.

In rectangular tanks the suspension flows in on one side and flows out over the rim on the opposite side. On the way, the solid particles sink to the bottom of the tank. The tank floor is positioned at an angle to aid discharge of the solid material. There are also devices by which the settled solid (sludge) can be cleared from the tank bottom. Sedimentation tanks are mostly used in water treatment.

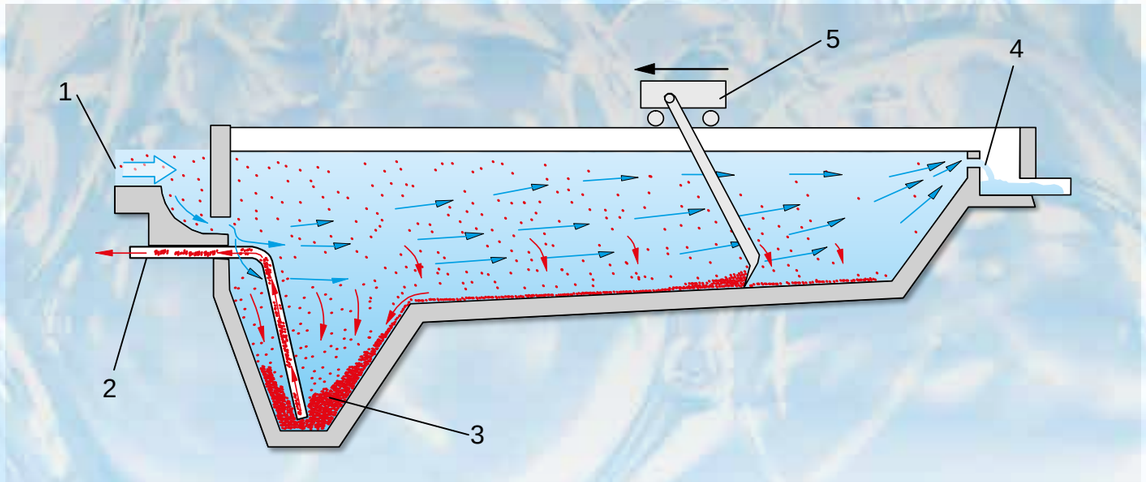

Sedimentation tank:
***1** wastewater inlet, **2** sludge extractor, **3** sludge hopper, **4** clean water overflow*
***5** cart for sludge clearing*

The *settling velocity* of the particles is the key variable in the design of sedimentation tanks and separator channels. It is directly related to the particle size, the particle shape (flow resistance) and the difference in density between the fluid and solid. If the particles in a suspension are very fine, or if the difference in density between the fluid and solid is slight, the settling velocity is very low. A technically useful separation by means of sedimentation is then not possible. Another variable influencing the settling velocity in liquids is the concentration of solid particles. At high concentrations, sedimentation is hindered. As the concentration increases, the so-called cluster settling velocity becomes less than the velocity of the single particles.

CE 587 DISSOLVED AIR FLOTATION

The flotation process most frequently used in water treatment is dissolved air flotation. CE 587 enables this process to be demonstrated clearly.

- continuous and practical process
- conditioning of the raw water by flocculation
- flotation tank with electrically driven scraper
- control of pH value
- high quality instrumentation and control

Process schematic of CE 587

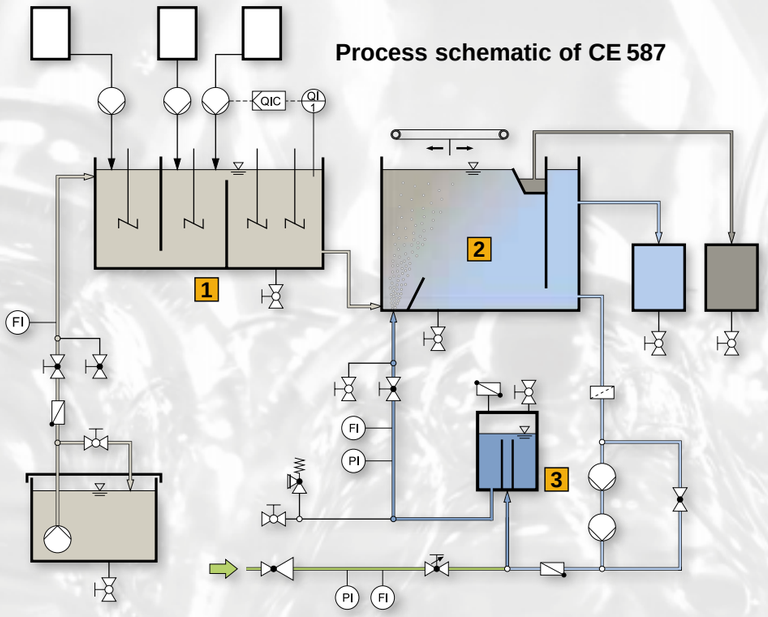

1 *Flocculation tank with stirring machines*

2 *Flotation tank with scraper*

3 *Components to generate the bubbles*

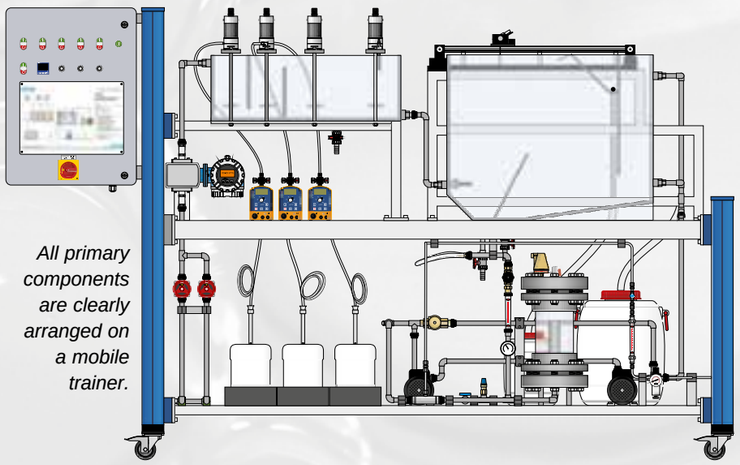

All primary components are clearly arranged on a mobile trainer.

University of Applied Sciences in Münster (Germany)

Be our next satisfied customer.

The electrically driven scraper clears the float from the surface of the water.

The recycle water enters the flotation tank: The sudden relief to atmospheric pressure causes the dissolved air to precipitate as a cloud of small bubbles.

You can find an interesting film of CE 587 on our 2E website **www.gunt2E.de**

Use of high quality components: Magneto-inductive flow rate sensor and metering pumps

THE INSTRUCTIONAL MATERIAL

We have compiled a comprehensive range of instructional material for the CE 587 which will greatly assist you in getting to know the system and in preparing your lessons and laboratory experiments and exercises.

Materials delivered as paper printouts in a folder and additionally as PDF files on a CD.

Instructional material of CE 587

CE 587 Dissolved Air Flotation

The illustration shows: Supply unit (left) and trainer (right)

*** Demonstration of dissolved air flotation**

*** Flocculation to condition the raw water**

*** Scraper to remove the float**

Technical Description

CE 587 demonstrates the clarification of raw water containing solids using the dissolved air flotation process.

First, a suspension (raw water) is prepared in a tank. From here the raw water flows into a flocculation tank divided into three chambers. By adding a coagulant in the first chamber the repulsive forces between the solid particles are cancelled out. The solid particles combine into flocs. To create larger flocs a flocculant is added in the second chamber. The coagulant causes a drop of the pH value. By adding caustic soda the pH value of the water can be increased again. In the following third chamber of the flocculation tank low flow velocities are present to prevent any turbulence. Turbulence would impede the formation of flocs.

From the flocculation tank the raw water enters the flotation tank. A part of the treated water is removed from the flotation tank and saturated with air under pressure. This water (recycle water) enters via a relief valve so that it suddenly expands to atmospheric pressure. This creates minute air bubbles which attach to the flocs. This makes the flocs rise to the surface of the water. Using a scraper the floating flocs (float) can be moved into a collection channel.

Flow rates, pressures and pH values are masured. The pH value can additionally be controlled. The pressure of the recycle water can be adjusted.

Trivalent metallic salts are usually well suited as coagulants. Common flocculants are organic polymers. Powdered activated carbon can be used to produce the raw water.

The well-structured instructional material sets out the fundamentals and provides a step-by-step guide through the experiments.

Learning Objectives / Experiments

- functional principle of dissolved air flotation
- creation of a stable operating state
- effects of various parameters
  * coagulant concentration
  * flocculant concentration
- determination of the hydraulic loading rate (rising velocity)

CE 587 Dissolved Air Flotation

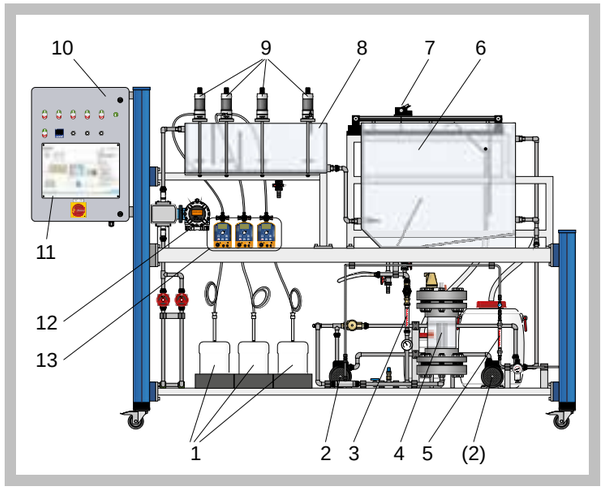

1 chemical tanks, 2 circulation pumps, 3 flow meter (recycle water), 4 pressure tank, 5 flow meter (air), 6 flotation tank, 7 scraper, 8 flocculation tank, 9 stirring machines, 10 switch cabinet, 11 process schematic, 12 electromagnetic flow rate sensor (raw water), 13 metering pumps

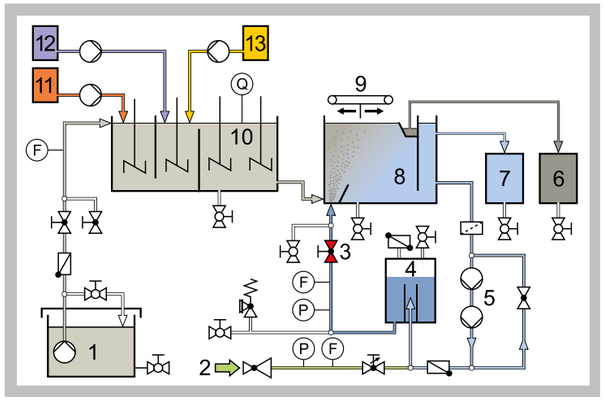

1 raw water, 2 compressed air, 3 relief valve, 4 pressure tank, 5 circulation pumps, 6 sludge (float), 7 treated water, 8 flotation tank, 9 scraper, 10 flocculation tank, 11 coagulant, 12 flocculant, 13 caustic soda; F flow rate, P pressure, Q pH value

Specification

[1] removal of solids from raw water using dissolved air flotation
[2] conditioning of the raw water by flocculation
[3] 3 Metering pumps for chemicals
[4] flocculation tank with 3 chambers and 4 stirring machines
[5] flotation tank with electrically driven scraper
[6] pressure tank and 2 circulation pumps
[7] relief valve
[8] separate supply unit with tank and pump for raw water
[9] electromagnetic flow rate sensor
[10] measurement of flow rate, pressure and pH value
[11] control of the pH value

Technical Data

Tanks
- flotation tank: 150L
- flocculation tank: 45L
- raw water: 300L
- treated water: 80L
- sludge (float): 15L

Raw water pump
- max. flow rate: 135L/min
- max. head: 7,0m

Circulation pumps
- max. flow rate: each 18L/min
- max. head: each 50m

Metering pumps
- max. flow rate: each 2,1L/h

Stirring machines
- max speed: each 600min^{-1}

Measuring ranges
- flow rate (raw water): 0...550L/h
- flow rate (recycle water): 30...320L/h
- flow rate (air): 20...360L/h
- pH value: 1...14
- pressure (recycle water): 0...6bar

Dimensions and Weight

LxWxH: 1560x790x1150mm (supply unit)
LxWxH: 3100x790x1950mm (trainer)
Total weight: approx. 550kg

Required for Operation

230V, 50/60Hz, 1 phase or 120V, 60Hz, 1 phase
Water connection, drainage, compressed air, caustic soda, iron(III) sulfate, flocculant, powdered activated carbon (recommendation)

Scope of Delivery

1 supply unit
1 trainer
1 set of hoses
1 set of instructional material

Order Details

083.58700 CE 587 Dissolved Air Flotation

2E a division of G.U.N.T Gerätebau GmbH, P.O.Box 1125, D-22885 Barsbüttel, t +49 (40)67 08 54-0, f +49 (40)67 08 54-42, E-mail sales@gunt.de
We reserve the right to modify our products without any notifications. Visit our Websites: www.gunt.de | www.gunt2e.de

HM 142 Separation in Sedimentation Tanks

*** Solid/liquid separation in a sedimentation tank**

*** Visualisation of flow conditions**

Technical Description

In sedimentation tanks, solids are separated out of suspensions under the influence of gravity. For this, the density of the solid particles must be greater than that of the liquid.

With HM 142, the factors influencing the separation process in sedimentation tanks can be investigated. First a suspension of water and precipitated calcium carbonate is prepared in a tank. A pump delivers the suspension to the sedimentation tank. In the inlet area of the sedimentation tank the suspension intermingles with fresh water. The mixture flows over an inlet weir. On their way through the sedimentation tank the solids sink to the bottom. The treated water flows out by way of the weir at the sedimentation tank outlet.

The solid concentrations at the sedimentation tank inlet and outlet are determined by means of two Imhoff cones. The mass separated in the sedimentation tank can be determined from the difference between them. The flow rates of the suspension and the fresh water are adjusted by valves and indicated by flow meters. This enables the mixing ratio - and thus the solid concentration of the mixture - to be adjusted. In order to ensure a uniform mix of the suspension and prevent premature sedimentation, a portion of the suspension is fed back into the suspension tank by way of a bypass. To investigate the flow conditions, ink can be added with a piston burette to the fresh water stream as a tracer substance. The mixed-in volume of ink is entered using keys and indicated on a display. To provide enhanced observation of the flow conditions and settling processes, the sedimentation tank is made of transparent material.

A baffle plate can be positioned in the sedimentation tank to impede the flow. Its horizontal and vertical positioning in the sedimentation tank is adjustable. This enables the flow conditions and the efficiency of the separation process to be influenced.

The well-structured instructional material sets out the fundamentals and provides a step-by-step guide through the experiments.

Learning Objectives / Experiments

- learning the fundamental principle of separation of solids from suspensions in a sedimentation tank
- efficiency of the separation process dependent on
  * solid concentration of suspension
  * flow rate
  * position of baffle plate
- investigation of flow conditions dependent on
  * flow rate
  * position of baffle plate

HM 142 Separation in Sedimentation Tanks

1 suspension flow meter, 2 fresh water flow meter, 3 switch box, 4 bypass valve, 5 suspension pump, 6 suspension tank, 7 storage bin, 8 outlet, 9 sedimentation tank, 10 baffle plate, 11 fresh water/suspension mixing zone

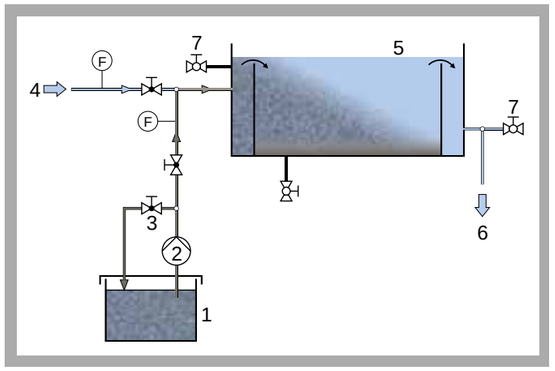

1 suspension tank, 2 pump, 3 bypass valve, 4 fresh water inlet, 5 sedimentation tank, 6 treated water outlet, 7 sampling points; F flow rate

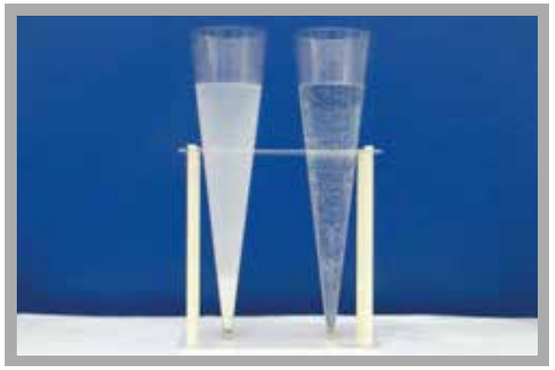

Determination of solid concentrations at sedimentation tank inlet and outlet by Imhoff cones

Specification

[1] separation of suspensions by sedimentation in transparent sedimentation tank
[2] tank with pump to prepare and deliver a suspension comprising water and precipitated calcium carbonate
[3] bypass to tumble and homogenise the suspension
[4] mixing of the suspension with fresh water in sedimentation tank inlet zone
[5] adjustment of fresh water and suspension flow rate by valves
[6] precise piston burette for metering of ink to visualise flow conditions in the sedimentation tank
[7] influencing of flow conditions in the sedimentation tank with baffle plate that can be positioned
[8] determination of solid concentrations at sedimentation tank inlet and outlet by Imhoff cones

Technical Data

Sedimentation tank
- LxWxH: 1000x400x230mm
- capacity: approx. 80L
- material: plexiglass

Suspension tank
- capacity: approx. 100L
- material: stainless steel

Pump
- max. flow rate: 75L/min
- max. head: 5m

Piston burette
- metering accuracy: 0,15% of nominal volume
- volume adjustment range: 0...20ml
- resolution: 0,01ml

Imhoff cones
- capacity: each 1000ml

Measuring ranges
- flow rate (fresh water): 60...640L/h
- flow rate (suspension): 0...1,9L/min

Dimensions and Weight

LxWxH: 1900x670x1590mm
Weight: approx. 190kg

Required for Operation

230V, 50/60Hz, 1 phase or 120V, 60Hz, 1 phase
Water connection (200...300L/h), drainage

Scope of Delivery

1 trainer
1 piston burette
2 Imhoff cones
1 packing unit of precipitated calcium carbonate
1L ink
1 set of instructional material

Order Details

070.14200 HM 142 Separation in Sedimentation Tanks

2E a division of G.U.N.T Gerätebau GmbH, P.O.Box 1125, D-22885 Barsbüttel, t +49 (40)67 08 54-0, f +49 (40)67 08 54-42, E-mail sales@gunt.de
We reserve the right to modify our products without any notifications. Visit our Websites: www.gunt.de | www.gunt2e.de

BASIC KNOWLEDGE

FILTRATION

Filtration is used to remove solids. The fundamental principle is that the solids are captured and retained by a filter medium. The liquid phase of the raw water passes through the filter, and is termed filtrate. A fundamental distinction is made between depth filtration and surface filtration.

Surface filtration

Surface filtration is based on a screening effect. The solids do not penetrate the filter, but are held back on its surface. Therefore the pore width of the filter medium must be less than the size of the solid particles. Filter media used may be sieves, cloths, filter paper or membranes. If the flow is directed perpendicular to the surface, the term cake filtration is used. A filter cake builds up on the filter medium over time which reduces the flow rate of the filtrate. This is a disadvantage of this process. This problem is countered in cross-flow filtration by causing the raw water to flow parallel to the surface. Deposits on the filter are then largely removed by the flow. This principle is applied primarily in the membrane separation processes.

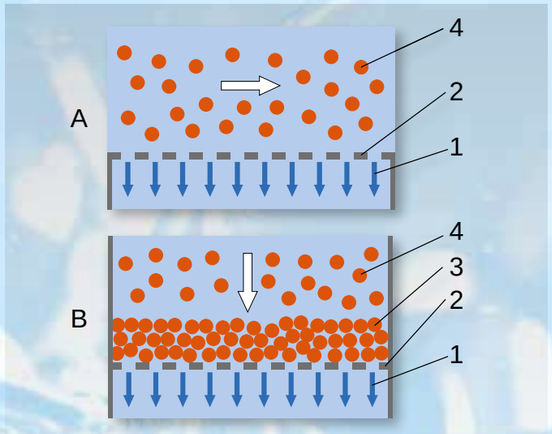

Surface filtration:
***A** cross-flow filtration, **B** cake filtration*
***1** treated water (filtrate), **2** filter medium, **3** filter cake*
***4** solids*

Depth filtration

In depth filtration, the raw water flows through a bed of granular material (filter bed) such as sand or gravel. As the raw water flows through the interstices between the grains of the filter medium, suspended solids are captured and retained. The treated water passes through the filter bed. Over time, more and more solids collect in the flow channels of the filter bed. This reduces the cross-sectional area of the flow channels increasing the hydraulic resistance of the filter to the flow. This resistance is expressed as a loss of pressure. The flow through the filter decreases, or it can only be maintained by increasing the pressure on the inflow side of the filter. The deposited solids can be removed by backwashing them. Consequently, the pressure loss is reduced by a backwash. This process usually takes place with treated water in the opposite flow direction.

The pressure trend over time in a filter bed can be depicted by filter resistance diagrams – also known as Micheau diagrams.

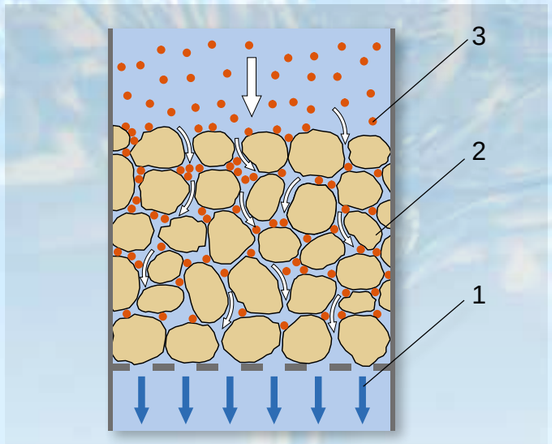

Depth filtration:
***1** treated water (filtrate), **2** filter medium, **3** solids*

CE 579 DEPTH FILTRATION

The ideal way to teach and learn about depth filtration in all its aspects

- filtration and backwash
- comprehensive range of instrumentation
- manometer panel to measure the pressures in the filter bed
- state-of-the-art software with control functions and data acquisition

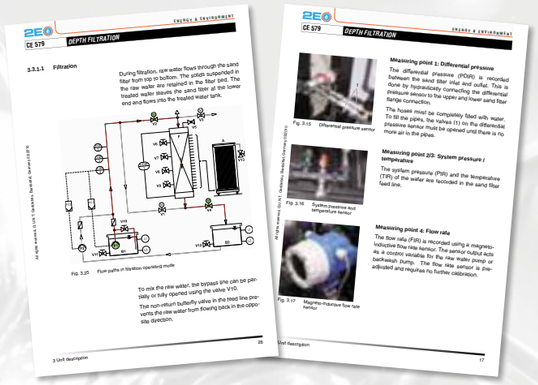

The well-structured instructional material is delivered as paper printouts in a folder and additionally as PDF files on a CD.

Use of high quality components: Magneto-inductive flow rate sensor, backwash pump and ball valves with electric drive

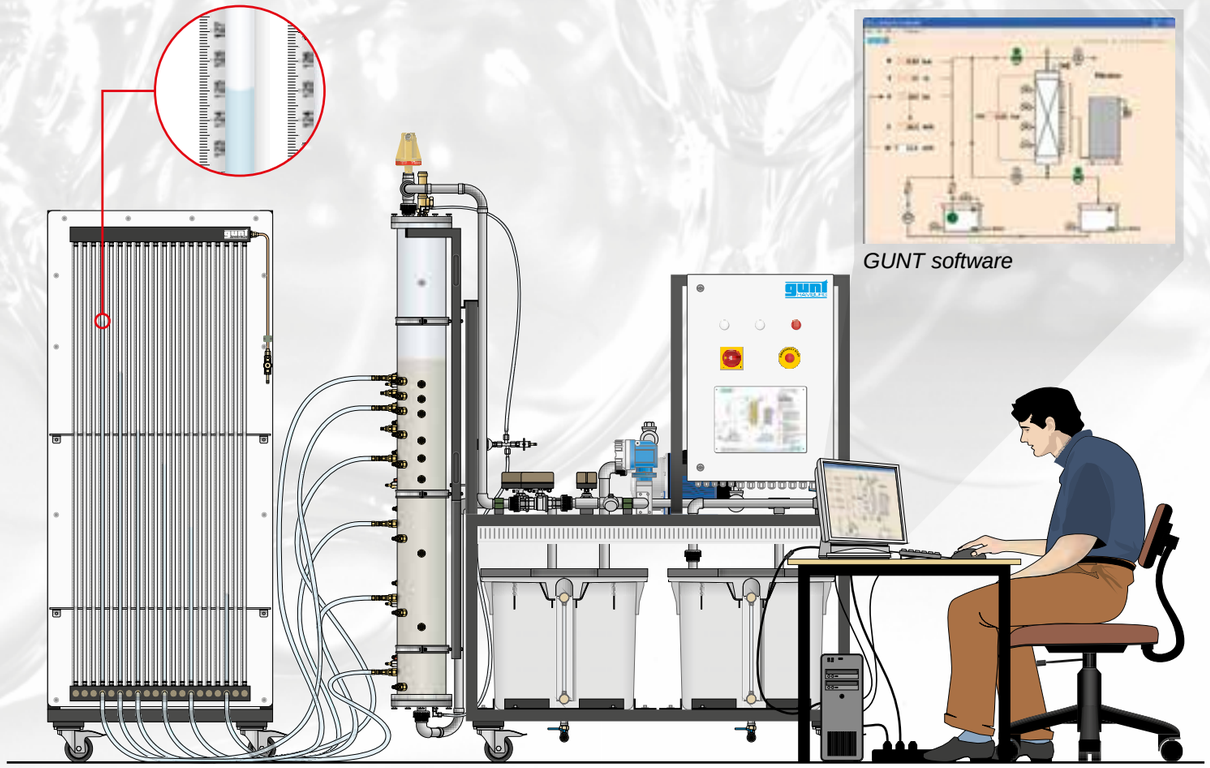

GUNT software

Manometer panel

Trainer

CE 579 Depth Filtration

The illustration shows: manometer panel (left) and trainer (right)

*** Removal of solids by depth filtration (sand filter)**

*** Pressure loss: plotting of Micheau diagrams**

*** Backwash of sand filters**

Technical Description

Depth filtration with sand filters is a key unit operation in water treatment. CE 579 enables this process to be demonstrated.

Raw water contaminated with solids is pumped from above into a sand filter. The solids are captured and retained as the raw water flows through the filter bed. The water itself passes through the filter bed and emerges at the bottom end of the sand filter. The treated water (filtrate) flows into a tank. Over time, more and more solids are deposited in the filter bed which increases its flow resistance. This process is detectable by the increasing pressure loss between the sand filter inlet and outlet. The flow through the sand filter decreases. Backwashing with treated water cleans the filter bed and reduces the pressure loss again.

The sand filter is equipped with a differential pressure gauge. There are also several pressure measuring points along the filter bed. The pressures are transmitted to tube manometers via hoses and displayed there as water columns. This can be used to plot Micheau diagrams. The flow rate, temperature, differential pressure and system pressure are measured. The flow velocity in the filter bed (filter velocity) can be adjusted. Samples can be taken at all relevant points.

A software program is provided to control the operating states and measure data. A process schematic shows the current operating states of the individual components and the measured data. E.g. diatomite can be used to produce the raw water.

The well-structured instructional material sets out the fundamentals and provides a step-by-step guide through the experiments.

Learning Objectives / Experiments

- learning the fundamental principle of depth filtration by sand filters
- observation of the pressure conditions in a filter bed
- determination of pressure losses
- plotting of Micheau diagrams
- principle of backwash

CE 579 Depth Filtration

1 treated water tank, 2 raw water tank, 3 raw water pump, 4 switch cabinet, 5 bachwash pump, 6 electromagnetic flow rate sensor, 7 temperature sensor, 8 ball valves with electric drive, 9 bleed valve, 10 sand filter

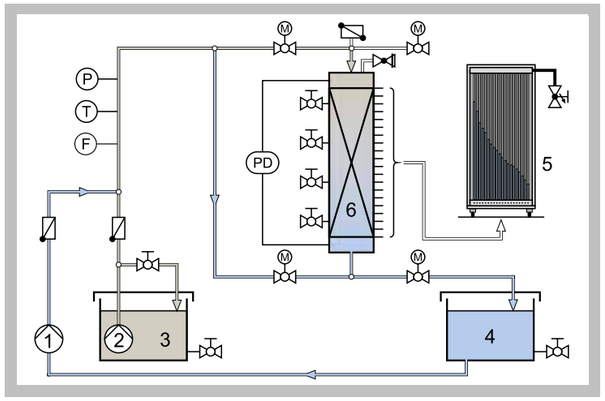

1 backwash pump, 2 raw water pump, 3 raw water, 4 treated water (filtrate), 5 manometer panel, 6 sand filter; F flow rate, P system pressure, PD differential pressure, T temperature

Specification

[1] depth filtration with sand filter
[2] sand filter backwash possible
[3] 20 tube manometers to measure the pressures in the filter bed
[4] plotting of Micheau diagrams
[5] raw water and backwash pump
[6] electromagnetic flow rate sensor
[7] 4 ball valves with electric drive
[8] measurement of flow rate, differential pressure, system pressure and temperature
[9] filter velocity adjustable
[10] GUNT software with control functions and data acquisition via USB under Windows Vista or Windows 7

Technical Data

Sand filter
- outer diameter: 200mm
- inside diameter: 150mm
- height: 1660mm

Raw water pump
- max. flow rate: 13m³/h
- max. head: 10m

Backwash pump
- max. flow rate: 3m³/h
- max. head: 37m

Tanks for raw water and treated water
- capacity: each 180L

Measuring ranges
- flow rate: 0...1300L/h
- tube manometers: 20x 0...1500mmWC
- differential pressure: -1...1bar
- system pressure: 0...4bar
- temperature: 0...100°C
- filter velocity: 0...70m/h

Dimensions and Weight

LxWxH: 1590x900x2190mm (trainer)
LxWxH: 750x640x1900mm (manometer panel)
Total weight: approx. 250kg

Required for Operation

230V, 50/60Hz, 1 phase or 230V, 60Hz/CSA, 3 phases
Water connection, drainage

Scope of Delivery

1 trainer
1 manometer panel
1 set of hoses
1 packing unit of gravel
1 packing unit of diatomite
1 GUNT software CD + USB cable
1 set of instructional material

Order Details

083.57900 CE 579 Depth Filtration

2E a division of G.U.N.T Gerätebau GmbH, P.O.Box 1125, D-22885 Barsbüttel, t +49 (40)67 08 54-0, f +49 (40)67 08 54-42, E-mail sales@gunt.de
We reserve the right to modify our products without any notifications. Visit our Websites: www.gunt.de | www.gunt2e.de

BASIC KNOWLEDGE

AEROBIC PROCESSES

Biological processes enable dissolved biodegradable substances (organic matter) to be removed from wastewater. The organic matter provides a nutrient for microorganisms, and is converted under aerobic conditions into biomass, carbon dioxide and water. Aerobic microorganisms need oxygen for respiration.

As well as organic matter, nitrogenous compounds such as ammonium and nitrate must usually also be removed from wastewater. Specific microorganisms convert ammonium initially into nitrate (nitrification). Another group of microorganisms then reduces the nitrate to nitrogen gas which escapes to the atmosphere (denitrification).

A distinction is made between biofilm and activated sludge processes.

Activated sludge process

In this process, the microorganisms are suspended in the wastewater. Aeration of the wastewater in the aeration tank provides the aerobic microorganisms with oxygen. The metabolic process causes them to form into flocs – the so called activated sludge. This is separated from the wastewater by means of sedimentation (secondary clarification). More biomass is removed from the aeration tank than is produced in the same period of time. In order to balance out this loss of biomass in the aeration tank, part of the activated sludge is returned to the aeration tank (return sludge). The portion of the activated sludge which is not returned is termed surplus sludge and is a waste product of the process.

Activated sludge

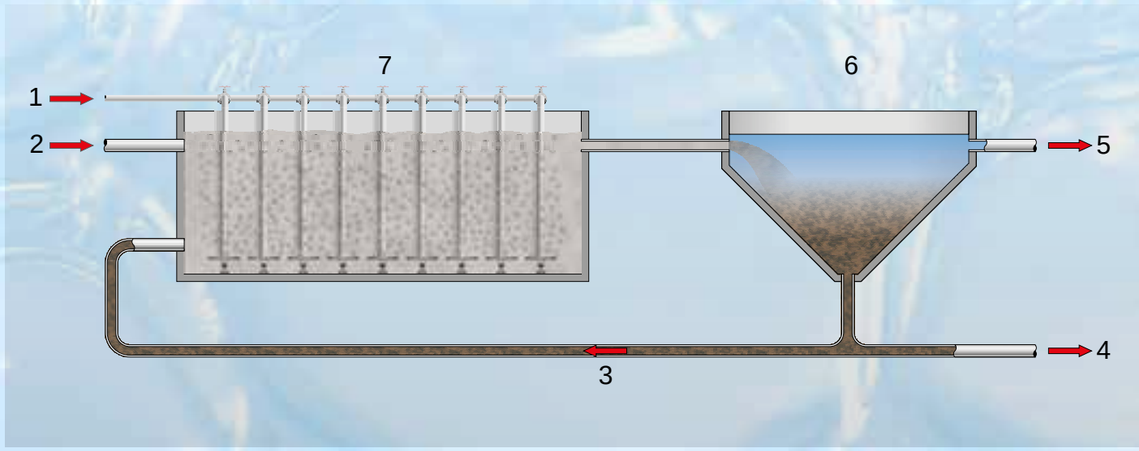

Fundamental principle of the activated sludge process:
***1** air, **2** wastewater, **3** return sludge, **4** surplus sludge, **5** treated water, **6** secondary clarifier (sedimentation)*
***7** aeration tank*

Biofilm processes

Biofilm processes are based on microorganisms settling on the surfaces of solids. The resulting layer of microorganisms is called a biofilm. The solids used in this process are called carrier material. This means the wastewater must be brought into contact with the biofilm affixed to the carrier material.

The most important version are **trickling filters.** Here the wastewater is trickled over a layer of carrier material (fixed bed) using a rotating distributor. Whilst the wastewater passes through the carrier material it is biologically cleaned by the microorganisms. Aeration of the trickling filter is normally via natural convection. This is based on the temperature difference between the outside air and the inside of the trickling filter.

Carrier materials have high specific surface areas (approx. 200 m²/m³). Carrier materials can be of natural origin (e.g. extrusive rocks) or be artificially produced.

Carrier materials for biofilms:
***1** artificial carrier material (plastic),*
***2** natural carrier material (e.g. extrusive rocks)*

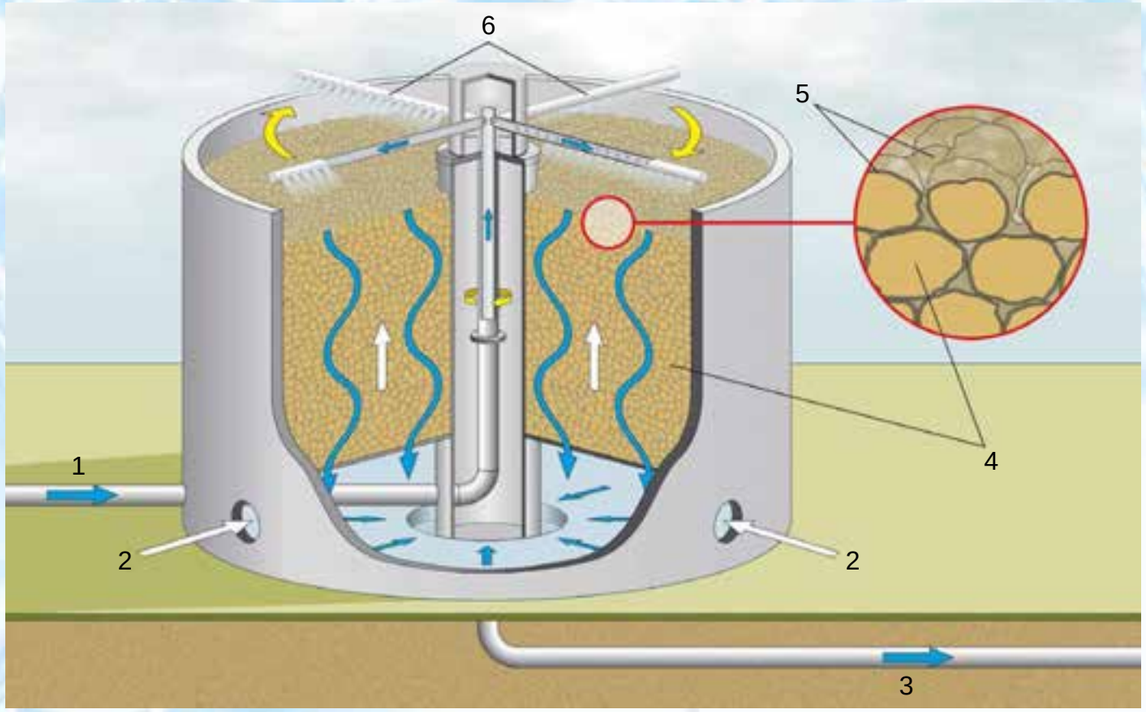

How a trickling filter works:
***1** wastewater, **2** aeration by natural convection, **3** treated water, **4** carrier material, **5** biofilm, **6** distributor*

CE 701 Biofilm Process

The illustration shows: Supply unit (left) and trainer (right)

*** Aerobic biofilm processes: trickling filter**
*** Practical experiments in laboratory scale**
*** Concentration profiles**

Technical Description

Fixed biofilm processes are used in the biological treatment of wastewater. Trickling filters are based on these processes.

A pump transports the wastewater from the supply unit to the upper end of the trickling filter. The wastewater drops down on the trickling filter using a rotary distributor. In the trickling filter there is a fixed bed consisting of special carrier material. On this carrier material there is a thin layer of microorganisms (biofilm). While the wastewater trickles through the fixed bed, the microorganisms clean the wastewater by biological processes. The degradation of organic substances preferably takes place in the upper region of the trickling filter. In the lower region on the other hand, the oxidation of ammonium to nitrate (nitrification) is the predominant process. Subsequently, the wastewater flows into a collecting tank. Two pumps deliver a portion of the collected wastewater to the rotary distributor again (recirculation).

In the lower region of the trickling filter there are openings to allow aeration by natural convection. Alternatively, aeration can take place with a compressor.

To produce the biofilm, the trickling filter is first filled with the carrier material, wastewater and activated sludge. The activated sludge continuously discharging from the trickling filter sediments into a secondary clarifier. A pump transports the activated sludge back to the trickling filter. The trickling filter is aerated by a compressor. Over time, microorganisms present in the activated sludge settle on the carrier material, thus producing the biofilm.

The following flow rates are recorded and can be adjusted: wastewater, recirculation, aeration (with compressor). The speed of the rotary distributor can also be adjusted. Sampling points on the trickling filter allow concentration profiles to be recorded.

Activated sludge from a wastewater treatment plant is required for the experiments. To analyse the experiments we recommend analytical equipment for determining the following parameters:
- biochemical or chemical oxygen demand
- ammonium concentration
- nitrate concentration

The well-structured instructional material sets out the fundamentals and provides a step-by-step guide through the experiments.

Learning Objectives / Experiments

- functional principle of a trickling filter
- recording of concentration profiles
- creation of a stable operating state
- identification of the following influencing factors
  * flow rate of recirculation
  * volumetric loading of the trickling filter
  * surface loading of the trickling filter
- comparison of various carrier materials

CE 701 Biofilm Process

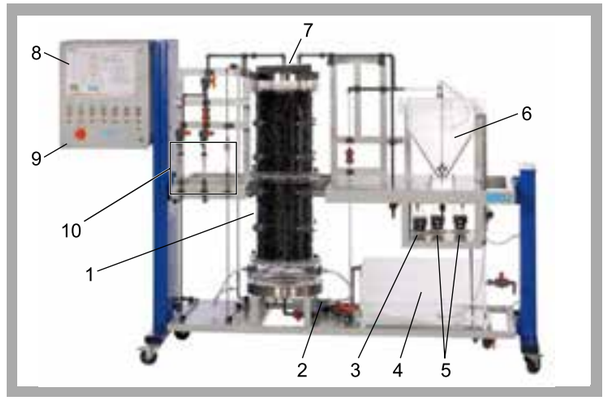

1 trickling filter, 2 compressor, 3 return sludge pump, 4 collecting tank, 5 circulation pumps, 6 secondary clarifier, 7 rotary distributor, 8 process schematic, 9 switch cabinet, 10 flow meter

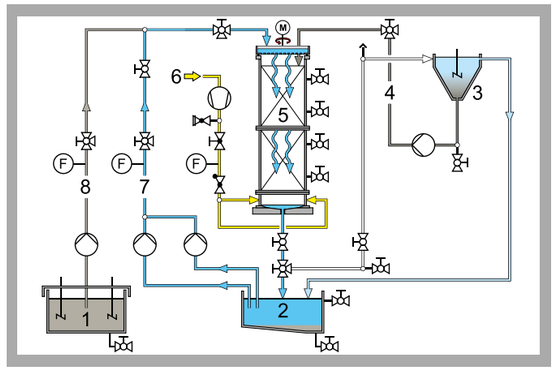

1 wastewater tank, 2 collecting tank, 3 secondary clarifier, 4 return sludge, 5 trickling filter, 6 air, 7 recirculation, 8 wastewater; F flow rate

carrier material for biofilm

Specification

[1] aerobic biofilm process for the degradation of organic substances and for nitrification
[2] transparent trickling filter with rotary distributor
[3] speed of the rotary distributor finely adjustable
[4] aeration of the trickling filter by natural convection or with compressor
[5] recording of concentration profiles is possible
[6] secondary clarifier with pump for transporting the return sludge
[7] all relevant flow rates finely adjustable
[8] separate supply unit with wastewater tank and two stirring machines
[9] two different carrier materials made of HDPE

Technical Data

Trickling filter
- diameter: approx. 340mm
- height: approx. 1000mm
- capacity: approx. 90L

Rotary distributor
- max. speed: approx. $2min^{-1}$

Tanks
- wastewater tank: 300L
- collecting tank: 90L
- secondary clarifier: 30L

Flow rates
- wastewater pump: max. 25L/h
- circulation pumps: 2x max. 25L/h
- return sludge pump: max. 25L/h
- compressor: max. 600L/h

Carrier material
- specific surface: 180 or $300m^2/m^3$

Measuring ranges
- flow rate (wastewater): 2...25L/h
- flow rate (recirculation): 5...65L/h
- flow rate (aeration): 50...900L/h

Dimensions and Weight

LxWxH: 1550x790x1150mm (supply unit)
LxWxH: 2870x790x1900mm (trainer)
Total weight: approx. 500kg

Required for Operation

230V, 50/60Hz, 1 phase or 120V, 60Hz/CSA, 1 phase
Water connection, drainage, activated sludge and substances for preparation of artificial wastewater

Scope of Delivery

1 trainer
1 supply unit
1 set of hoses
1 set of tools
1 cleaning brush
2 packing units of carrier material
1 set of instructional material

Order Details

083.70100 CE 701 Biofilm Process

2E a division of G.U.N.T Gerätebau GmbH, P.O.Box 1125, D-22885 Barsbüttel, t +49 (40)67 08 54-0, f +49 (40)67 08 54-42, E-mail sales@gunt.de
We reserve the right to modify our products without any notifications. Visit our Websites: www.gunt.de | www.gunt2e.de

CE 705 Activated Sludge Process

The illustration shows: Trainer (left) and supply unit (right)

*** Wastewater treatment plant in laboratory scale**

*** Aerobic biological degradation of organic substances**

*** Nitrification and pre-denitrification**

Technical Description

The activated sludge process is the most important biological process in water treatment. CE 705 enables this process to be demonstrated.

A pump delivers raw water contaminated with dissolved organic substances (organic matter) into the aeration tank. Aerobic microorganisms (activated sludge) in the aeration tank use the organic matter as a source of nutrition, biodegrading it in the process. Since aerobic microorganisms need oxygen, the raw water is aerated in the aeration tank. The activated sludge is mixed with the raw water by stirring machines. In the secondary clarifier the activated sludge is then separated from the treated water by sedimentation. A portion of the activated sludge is returned to the aeration tank (return sludge). The treated water is collected in a tank.

It is also possible to convert ammonium into nitrate (nitrification) and nitrate into nitrogen (denitrification). For denitrification a zone without aeration can be created in the aeration tank by installing a partition wall.

The following flow rates are adjustable: raw water, return sludge, internal recirculation for pre-denitrification and air. Oxygen concentration, pH value and temperature can be contolled.

A software program is provided to display the operation states and measure data. A process schematic shows the current operating states of the individual components and the measured data.

Samples can be taken at all relevant points. Activated sludge from a wastewater treatment plant and analysis technology are required for the experiments. Recommended parameters are:
- BOD_5 (biochemical oxygen demand)
- COD (chemical oxygen demand)
- NH_4 (ammonium)
- NO_3 (nitrate)

The well-structured instructional material sets out the fundamentals and provides a step-by-step guide through the experiments.

Learning Objectives / Experiments

- learning the fundamental principle of the activated sludge process
- functional principle of nitrification and pre-denitrification
- creation of a stable operating state
- identification of the following influencing factors
  * return sludge ratio
  * return ratio of the internal recirculation
  * sludge age
  * sludge loading
  * volumetric loading
  * oxygen concentration, pH value and temperature
- efficiency of the pre-denitrification

CE 705 Activated Sludge Process

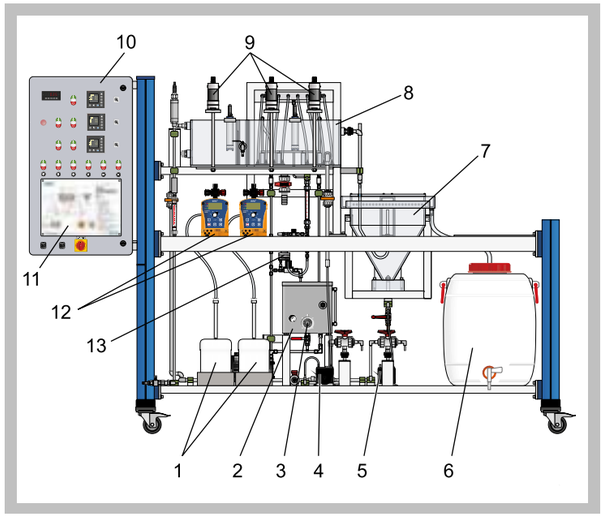

1 tanks for acid and caustic, 2 heating water tank, 3 heater, 4 circulation pump, 5 return sludge pump, 6 treated water tank, 7 secondary clarifier, 8 aeration tank, 9 stirring machines, 10 switch cabinet, 11 process schematic, 12 metering pumps, 13 compressor

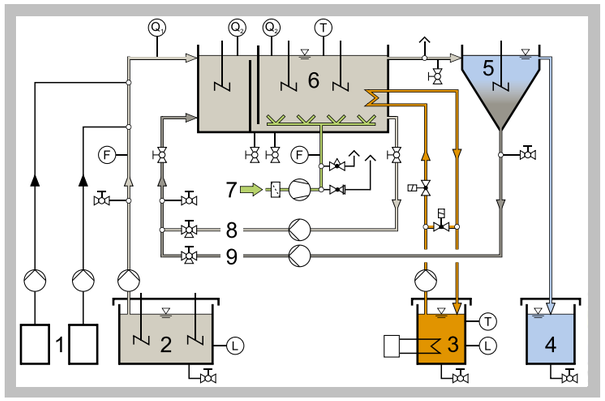

1 acid and caustic, 2 raw water, 3 heating water, 4 treated water, 5 secondary clarifier, 6 aeration tank, 7 air, 8 internal recirculation for pre-denitrification, 9 return sludge; F flow rate, L level, Q_1 pH value, Q_2 oxygen concentration, T temperature

Specification

[1] biological wastewater treatment
[2] aeration tank with 3 stirring machines
[3] secondary clarifier
[4] nitrification and pre-denitrification
[5] separate supply unit with 2 stirring machines
[6] all relevant flow rates adjustable
[7] control of temperature, pH value and oxygen concentration
[8] measurement of flow rate, temperature, pH value and oxygen concentration
[9] GUNT software with display of the operation states and data acquisition via USB under Windows Vista or Windows 7
[10] visual inspection with webcam on PC

Technical Data

Aeration tank
- capacity nitrification zone: approx. 34L
- capacity denitrification zone: approx. 17L

Tanks
- secondary clarifier: 30L
- raw water tank: 200L
- treated water tank: 80L

Flow rates
- raw water pump: max. 25L/h
- return sludge pump: max. 25L/h
- circulation pump: max. 25L/h

Speeds (stirring machines)
- secondary clarifier: max. $45min^{-1}$
- all others: each max. $600min^{-1}$

Measuring ranges
- flow rate (raw water): 2...25L/h
- flow rate (compressed air): 50...550L/h
- temperature: 0...40°C
- pH value: 0...14
- oxygen concentration: 0...10mg/L

Dimensions and Weight

LxWxH: 1550x790x1150mm (supply unit)
LxWxH: 2830x790x1900mm (trainer)
Weight: approx. 450kg

Required for Operation

230V, 50/60Hz, 1 phase or 120V, 60Hz, 1 phase
Water connection, drainage, activated sludge, substances for preparation of artificial wastewater, caustic soda, hydrochloric acid

Scope of Delivery

1 trainer
1 supply unit
1 set of hoses
1 GUNT software CD + USB cable
1 webcam
1 measuring cup
1 stopwatch
1 beaker
1 set of instructional material

Order Details

083.70500 CE 705 Activated Sludge Process

2E a division of G.U.N.T Gerätebau GmbH, P.O.Box 1125, D-22885 Barsbüttel, t +49 (40)67 08 54-0, f +49 (40)67 08 54-42, E-mail sales@gunt.de
We reserve the right to modify our products without any notifications. Visit our Websites: www.gunt.de | www.gunt2e.de

A LOOK INSIDE OUR CUSTOMERS' LABORATORIES

GUNT devices have been used by our satisfied customers for many years in hundreds of technical training institutes.

Highest requirements regarding conception and details: GUNT devices are ideal to convey knowledge through practical application.

CE 705 ACTIVATED SLUDGE PROCESS

The wastewater treatment plant in laboratory scale: Theory and practice of the activated sludge process

- *Biological Water Treatment*
- *Nitrification Denitrification*
- *Continuous Process*
- *Practical*

A LABORATORY SYSTEM FOR EDUCATION AND RESEARCH

The Wastewater Treatment Plant

CE 705 clearly demonstrates the most important biological process in water treatment – the activated sludge process. The main field of application of this process is in the treatment of domestic wastewater by wastewater treatment plants. Knowledge of this process is therefore essential for budding engineers and specialists in the field of water treatment.

Bar screen

Grit chamber

In a wastewater treatment plant, domestic wastewater is treated to enable it to be discharged back into a watercourse. The treatment process is essentially divided into the following sections:

- mechanical treatment
- biological treatment

Mechanical treatment

In the first stage, suspended solids are mechanically removed from the wastewater. Initially, course materials such as pieces of wood, plastic bags and fabric are filtered out using a bar screen. Then the water flows into a grit chamber. In this sedimentation tank, mineral solids such as sand and gravel are separated by sedimentation. Organic solids have a much lower settling velocity than sand and, consequently, a low velocity sedimentation step is required to separate them. This process stage is termed primary clarification.

Aeration tank

Secondary clarifier

Biological treatment

Organic, biodegradable substances (organic matter) dissolved in wastewater provide nutrients for microorganisms. In this way, the wastewater is treated biologically. The microorganisms are suspended in the wastewater and are termed activated sludge. In the aeration tank the biological degradation of the organic matter takes place. Aeration of the wastewater provides the aerobic microorganisms with oxygen.

In the secondary clarifier the activated sludge is separated from the treated water by sedimentation. Part of the activated sludge is returned to the aeration tank (return sludge). The portion of the activated sludge which is not returned (surplus sludge) is a waste product of the process.

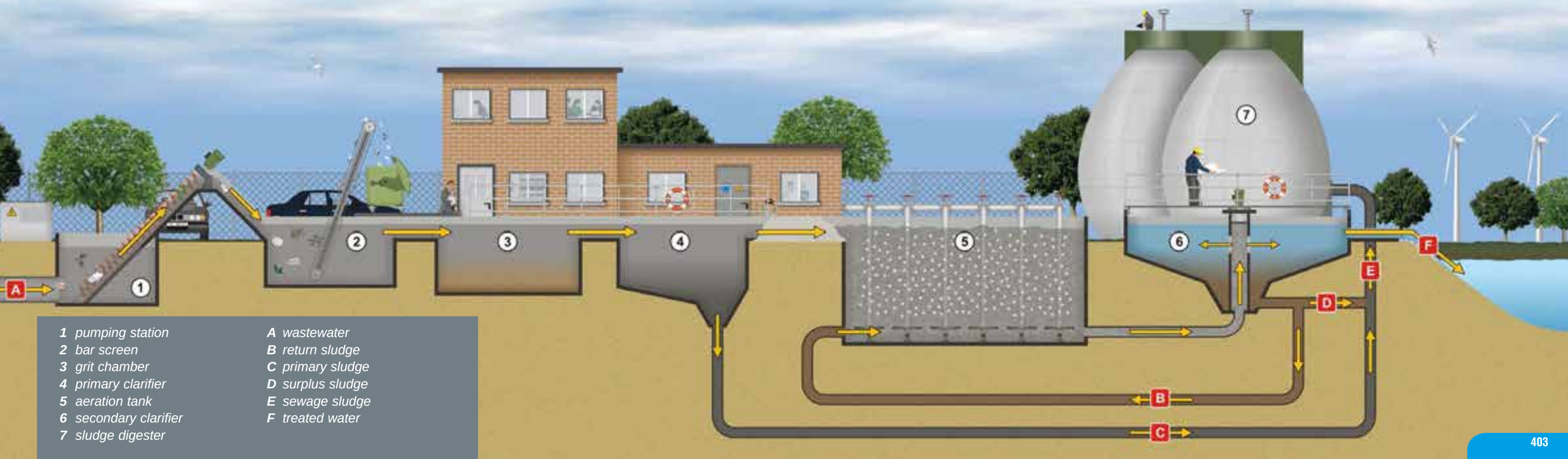

1 pumping station
2 bar screen
3 grit chamber
4 primary clarifier
5 aeration tank
6 secondary clarifier
7 sludge digester

A wastewater
B return sludge
C primary sludge
D surplus sludge
E sewage sludge
F treated water

Concept

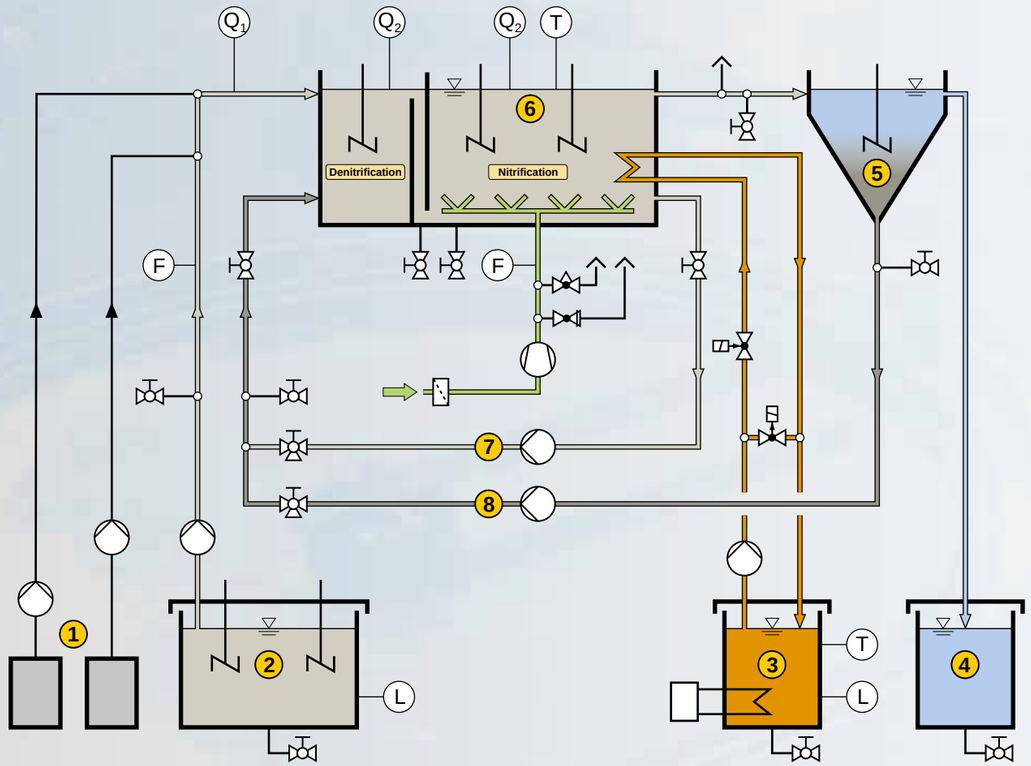

Process schematic of CE 705:
1 acid and caustic, 2 wastewater, 3 heating water, 4 treated water, 5 secondary clarifier, 6 aeration tank, 7 internal recirculation for pre-denitrification, 8 return sludge

Sensors:
F flow rate, L level, Q_1 pH value, Q_2 oxygen concentration, T temperature

Extensive range of learning objectives

- fundamental principle of the activated sludge process
- functional principle of nitrification and pre-denitrification
- creation of a stable operating state with nitrification and denitrification
- identification of the following influencing factors:
  - sludge age
  - volumetric loading
  - sludge loading
  - return sludge ratio
  - return ratio of the internal recirculation
- efficiency of the pre-denitrification
- influence of the following ambient conditions to the biological degradation
  - pH value
  - temperature
  - oxygen concentration

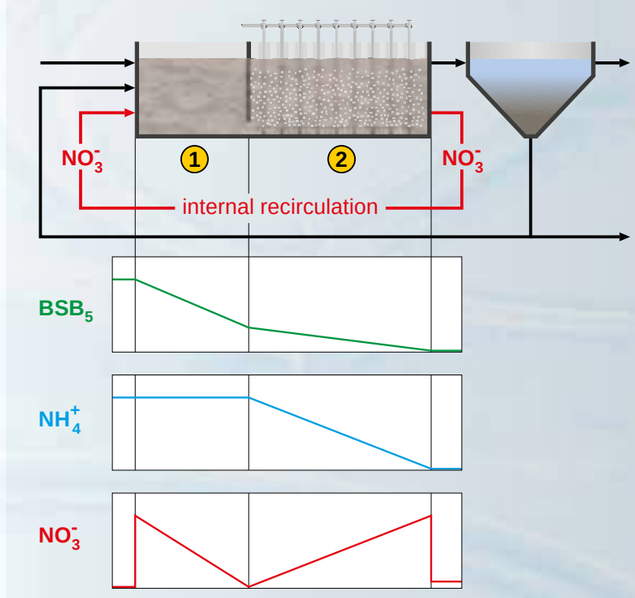

Basic principle of pre-denitrification

1 anoxic zone (denitrification)
2 aerobic zone (nitrification)

Features

- wastewater treatment plant in laboratory scale
- continuous and practical process
- aeration tank with an anoxic zone for pre-denitrification
- supply unit with large wastewater tank
- comprehensive range of instrumentation and control
- GUNT software with control functions and data acquisition

*The CE 705 is part of our division **2E – ENERGY & ENVIRONMENT.** For further interesting informations about this device please step to **www.gunt2e.de.***

NOTE
For more technical details please visit our homepage **www.gunt.de** and select the data sheet of CE 705.

The GUNT training systems are ideally suitable for students' group working, and of course for project-oriented working methods.

Device Design

SUPPLY UNIT

Separate supply unit with large wastewater tank and two high-performance stirring machines

TRAINER

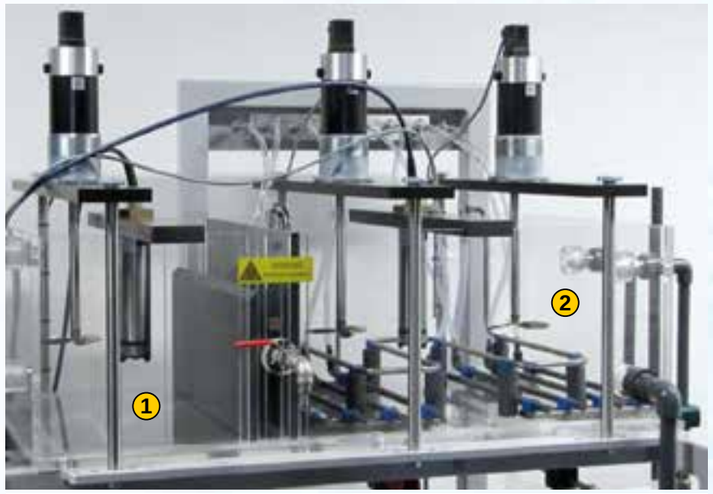

*Aeration tank with an aerobic zone **(2)** and an anoxic zone for pre-denitrification **(1)***

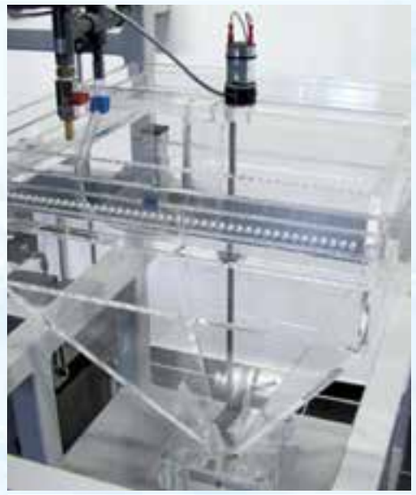

Secondary clarifier for separation of activated sludge

Instrumentation and Control

	PARAMETER		MEASUREMENT	CONTROL
1	flow rate	wastewater	✓	
2		aeration	✓	
3	oxygen concentration	aeration tank (anoxic zone)	✓	
4		aeration tank (aerobic zone)	✓	✓
5	pH value	wastewater	✓	✓
6	temperature	aeration tank (aerobic zone)	✓	✓

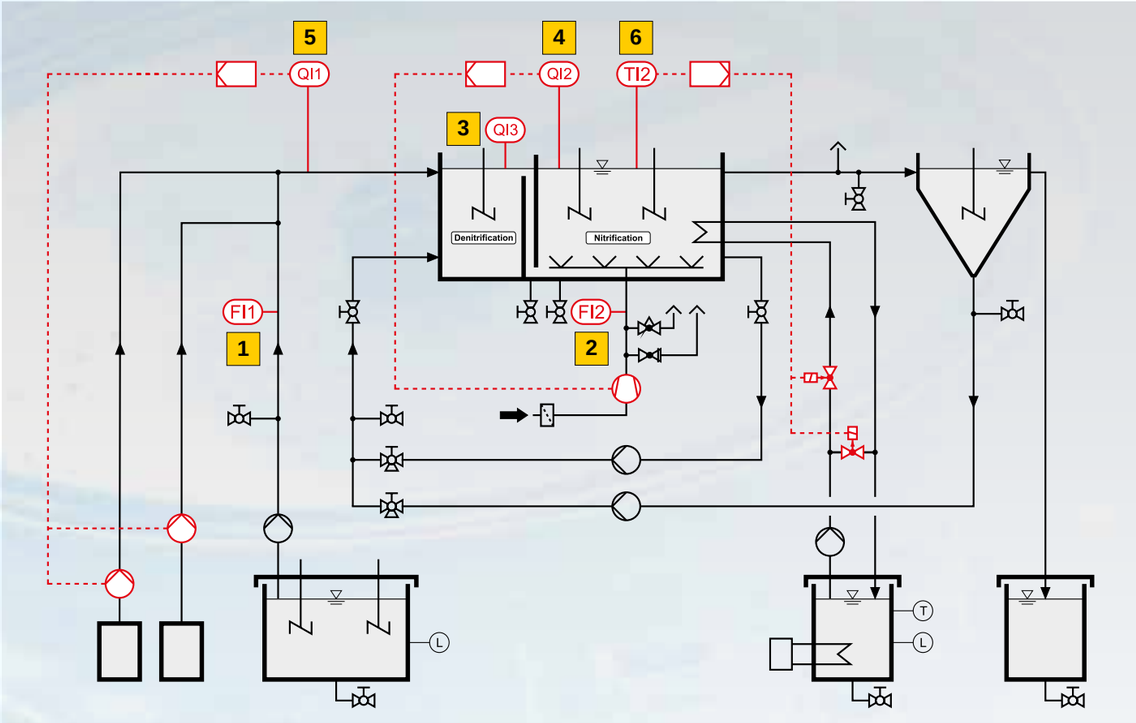

1 2 FLOW RATE

3 OXYGEN CONCENTRATION

In the anoxic denitrification zone the oxygen concentration is measured and indicated digitally.

SENSORS	CONTROLLERS	ACTUATORS

4 CONTROL OF OXYGEN CONCENTRATION

Oxygen sensor

Digital industrial controller

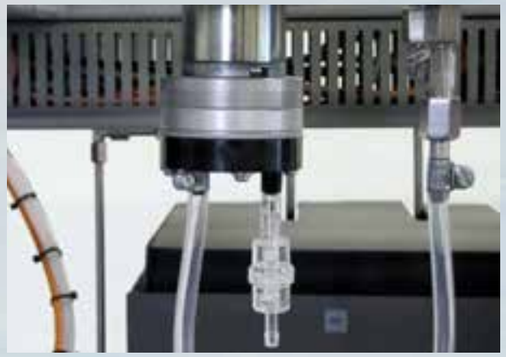

High-performance compressor

5 CONTROL OF pH VALUE

pH sensor

Digital industrial controller

Professional metering pumps

6 CONTROL OF TEMPERATURE

Temperature sensor

Digital industrial controller

Solenoid valves in heating water circuit

Operation and Software

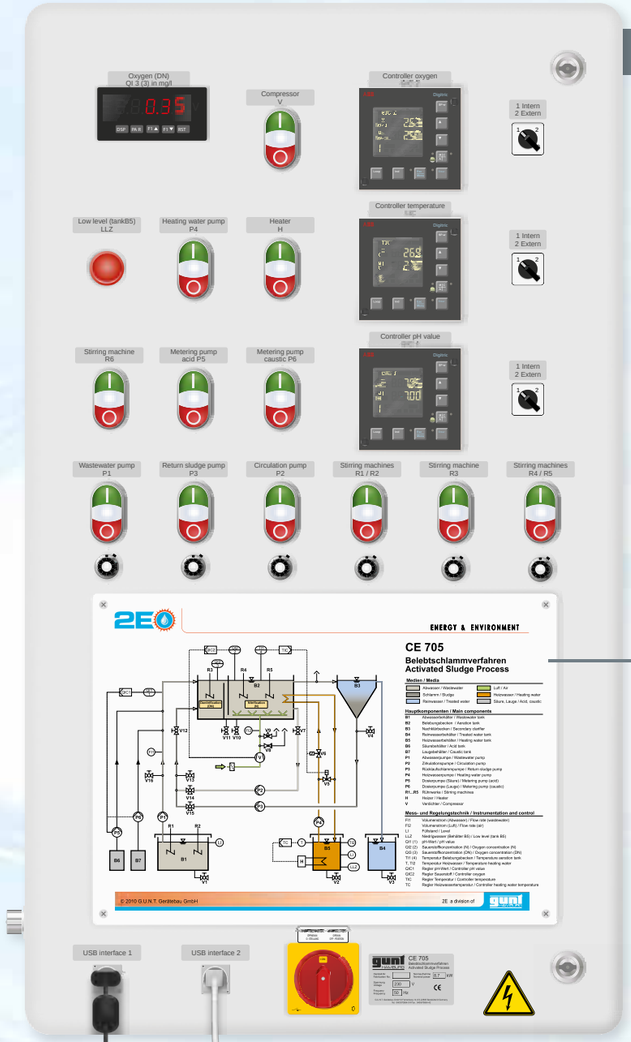

SWITCH CABINET

- controls of all primary components:
  - pumps
  - stirring machines
  - compressor
- controls arranged very clearly
- potentiometer to adjust:
  - flow rates of the pumps
  - rotation speed of the stirring machines
- digital controllers for control loops
- digital display of measured values
- transducers for the sensors

A large, clear process schematic on the switch cabinet makes it easy to assign all the components.

Visual inspection with webcam on PC

SOFTWARE AND DATA ACQUISITION

GUNT Software

- state-of-the-art software with display of the operation states and data acquisition
- control of the control loops
- storage of the measured data
- representation of time functions
- visual inspection with webcam on PC
- language selectable

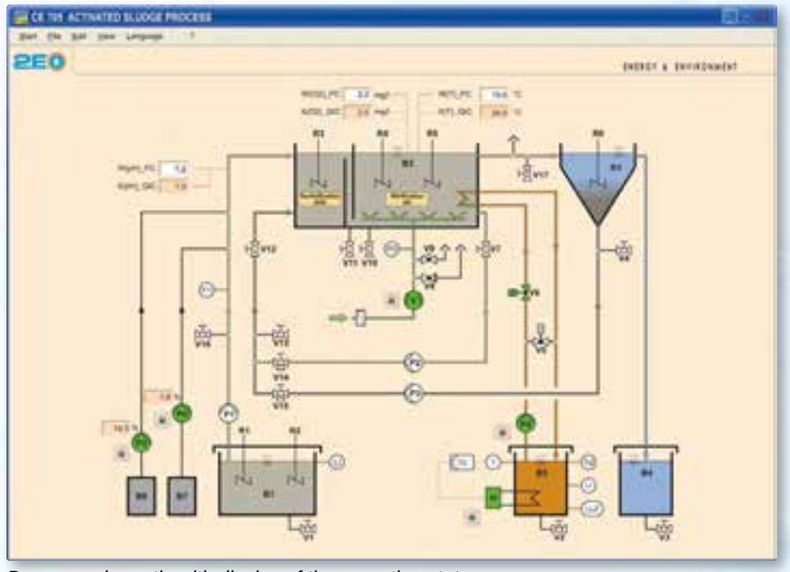

Process schematic with display of the operation states

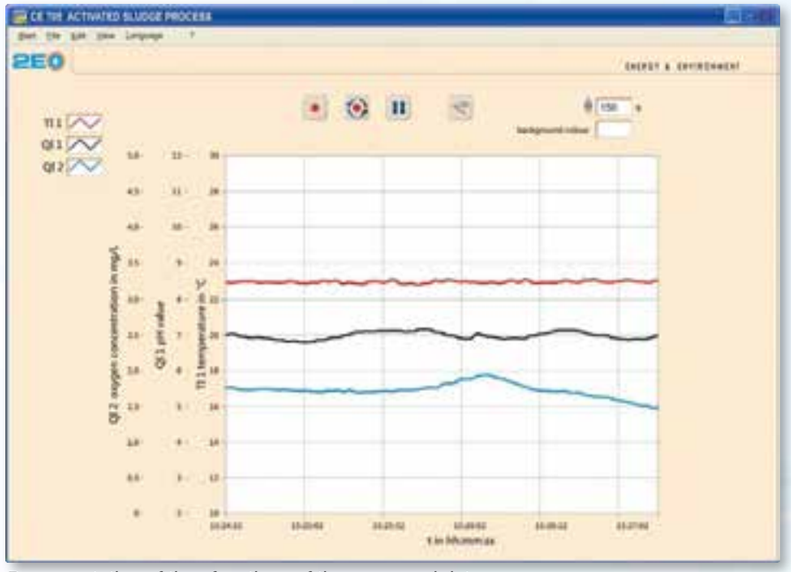

Representation of time functions of the measured data

The Instructional Material

EXPERIMENT INSTRUCTIONS

We have developed an extensive range of instructional material for the CE 705 which will greatly assist you in getting familiar with the trainer, in preparing your lessons, laboratory experiments and exercises.

The experiment instructions comprises:

- detailed description of the device
- detailed operating instructions
- design and function of the components used described very detailed
- fundamentals of the activated sludge process
- detailed description of the experiments
- work sheets for the experiments

Certainly in four languages – as you already know from GUNT.

Materials delivered as paper printouts in a folder and additionally as PDF files on a CD. **An extract of the experiment instructions is available on our 2E homepage www.gunt2e.de.**

Updates

When any updates or additions to the CE 705 are made – in particular with regard to the instructional material and the software – you, as a GUNT customer, will be notified accordingly.

PRESENTATION

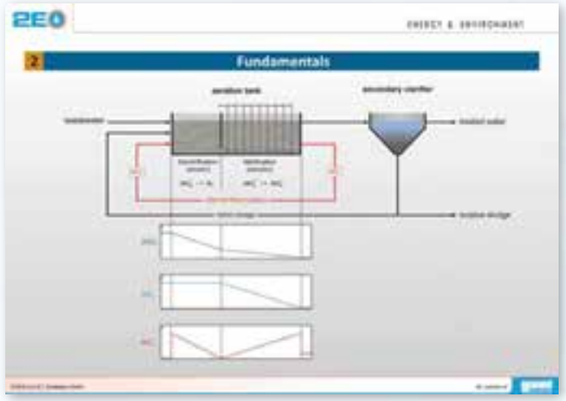

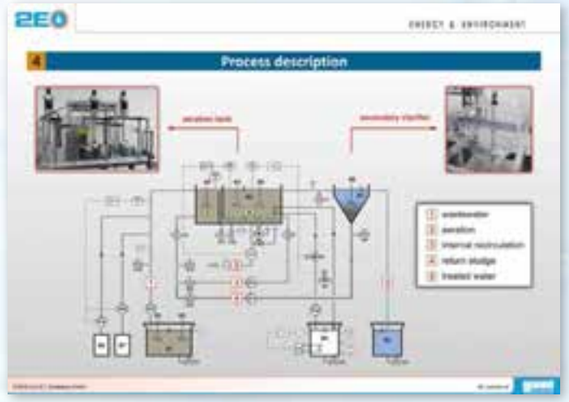

The perfect way to get into the topic:

- fundamentals of biological wastewater treatment and the activated sludge process
- design and concept of the CE 705
- clearly and illustrative

The presentation is part of the instructional material.

VIDEO

The instructional material also includes a video. The video clearly demonstrates all essential aspects necessary for the preparation and execution of the experiments.

The video enables to practical and easily get into the topic. Of course, the video is also available on our homepage www.gunt2E.de.

Commissioning and Training

A staff member of GUNT explains the fundamental principle of the activated sludge process.

The commissioning and training is carried out by high-qualified staff members of GUNT. As well as testing the products supplied, this includes instruction for the customer in the operation of the equipment. The possibilities of the system are demonstrated in detail. This enables you to quickly incorporate this training system into your own teaching programme.

If you require installation or training services, we will be glad to help.

Many domestic and international customers are already successfully using our CE 705 training system.

Examples:

- Vocational School of Stockerau (Austria)
- University of Karlsruhe (Germany)
- University of Deggendorf (Germany)
- University of Regensburg (Germany)
- Training Centre of Agip kco (Kazakhstan)
- Technical University of Monterrey (Mexico)

Activated sludge is taken from a wastewater treatment plant during a training.

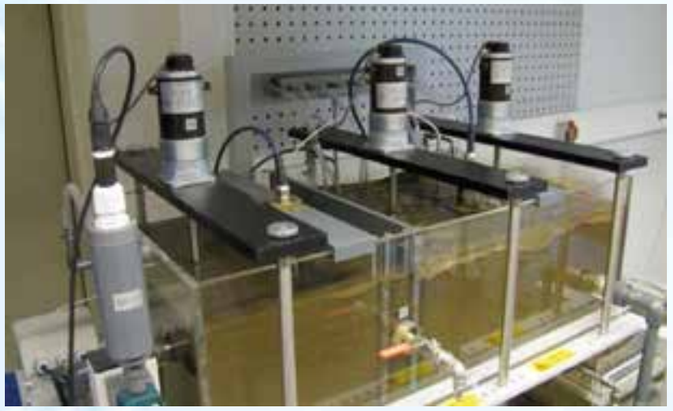

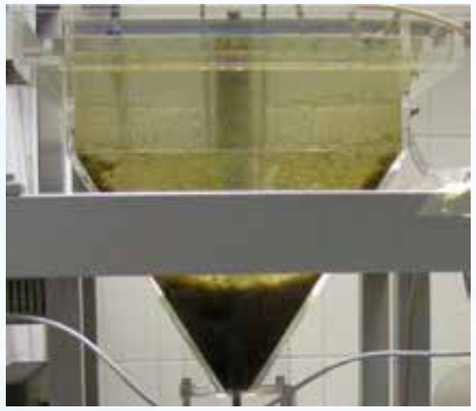

During the training the operation of the CE 705 is demonstrated under real conditions with activated sludge.

DEGGENDORF INSTITUTE OF TECHNOLOGY THD

Modern and practice-oriented education – supported by high-grade devices of GUNT

A staff member of GUNT explains the operation of the CE 705 to Mrs. Prof. Dr.-Ing. Deininger from the University of Deggendorf (Germany).

WE TAKE QUALITY SERIOUSLY

Our quality management system has been certified since 1998.

BASIC KNOWLEDGE

ANAEROBIC PROCESSES

In contrast to the aerobic processes, the anaerobic degradation of organic substances takes place in the absence of oxygen. The anaerobic microorganisms use the organic substances as a source of nutrition, and so degrade them. This produces biogas, mainly comprised of methane (60%) and carbon dioxide (35%). Biogas can be used as an energy source. The complex processes involved in anaerobic degradation can be simplified by dividing them into four phases (illustration). The metabolism is carried out in eech phase by different microorganisms.

Anaerobic processes are suitable for wastewater with very high concentrations of organic substances, such as occur in the food and paper industries. They are also often employed upstream of an aerobic process such as the activated sludge process.

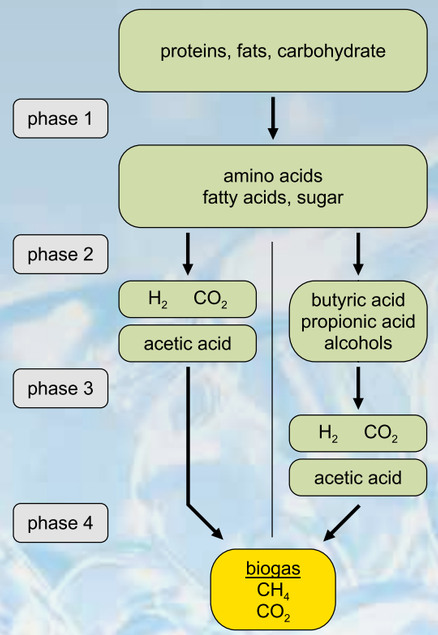

Fundamental principle of anaerobic degradation

Phase 1: Hydrolysis

Long-chain, often undissolved substances such as proteins, fats and carbohydrates are converted into dissolved species such as amino acids, fatty acids and sugar.

Phase 2: Acidification

Acid-forming microorganisms convert the hydrolysed substances into short-chain organic acids such as butyric acid, propionic acid and acetic acid. Small quantities of hydrogen and carbon dioxide are also produced.

Phase 3: Acetic acid formation

Methane (CH_4) can be produced by methane bacteria using acetic acid or hydrogen and carbon dioxide. Therefore acids and alcohols produced in phase 2 first have to be converted into acetic acid.

Phase 4: Methane formation

Methane bacteria produce methane using hydrogen, carbon dioxide and acetic acid.

The microorganisms of the individual phases place different demands on the ambient conditions. This relates especially to the pH value and the temperature. Accordingly, the first two and last two phases are each consolidated into one stage (table).

Ideally, therefore, the process should take place in stages, in two separate reactors. All four phases can also, in principle, take place in a single stage in one reactor. A compromise must then be found with regard to the ambient conditions, resulting in a lower degradation rate. The microorganisms of the first two phases can undergo metabolic processes both with and without oxygen. The microorganisms of the third and fourth phase, by contrast, are strictly anaerobic, and react very sensitively to oxygen and fluctuating pH values.

parameters	stage 1 phase 1 + 2	stage 2 phase 3 + 4
pH value	5,2 ... 6,3	6,7 ... 7,5
temperature	25 ... 35 °C	35 ... 60 °C

CE 702 ANAEROBIC WATER TREATMENT

A laboratory system for education and research

- two different types of reactors with temperature control
- three different operation modes
- UASB reactor with control of pH-value
- GUNT software for data acquisition

Stirred tank with secondary clarifier

UASB reactor

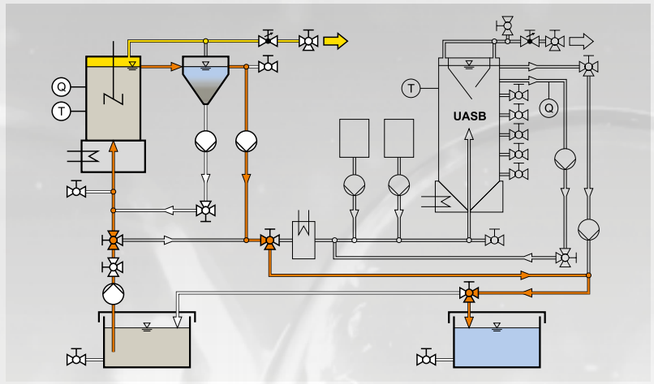

Operation mode 1 (1 stage):
- ☑ Stirred tank with secondary clarifier
- ☐ UASB reactor

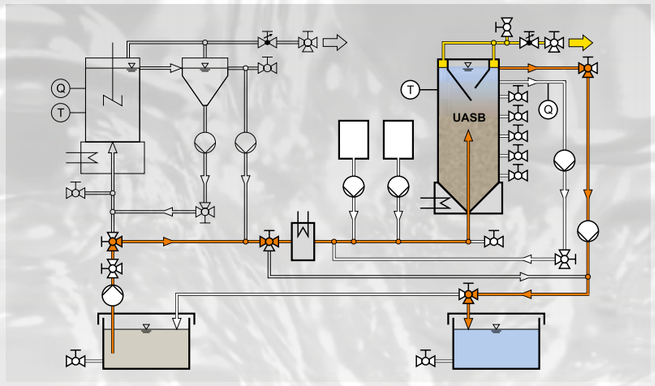

Operation mode 2 (1 stage):
- ☐ Stirred tank with secondary clarifier
- ☑ UASB reactor

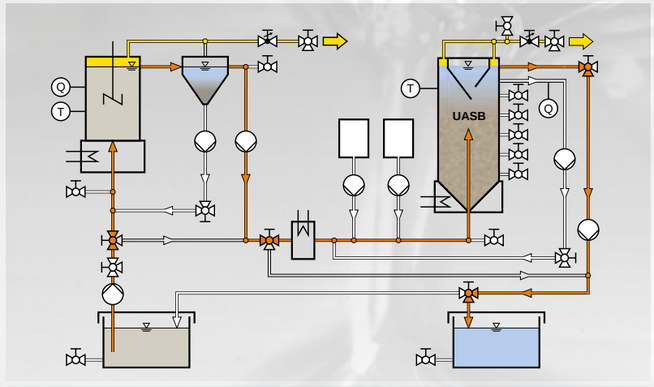

Operation mode 3 (2 stages):
- ☑ Stirred tank with secondary clarifier
- ☑ UASB reactor

Supply unit

Trainer

THE UASB PRINCIPLE

Upflow Anaerobic Sludge Blanket

The UASB reactor is a reactor type that is frequently used in anaerobic water treatment.

The reactor contains a sludge blanket which consists of anaerobic micro-organisms in the form of pellets. These pellets are an essential characteristic of the UASB principle. The reactor is flowed through from the bottom to the top.

Biogas which mainly consists of methane and carbon dioxide is produced during the anaerobic degradation. A separation system is installed at the top of the UASB reactor. It separates biogas from treated water. In addition it guarantees that the pellets (biomass) remain in the reactor.

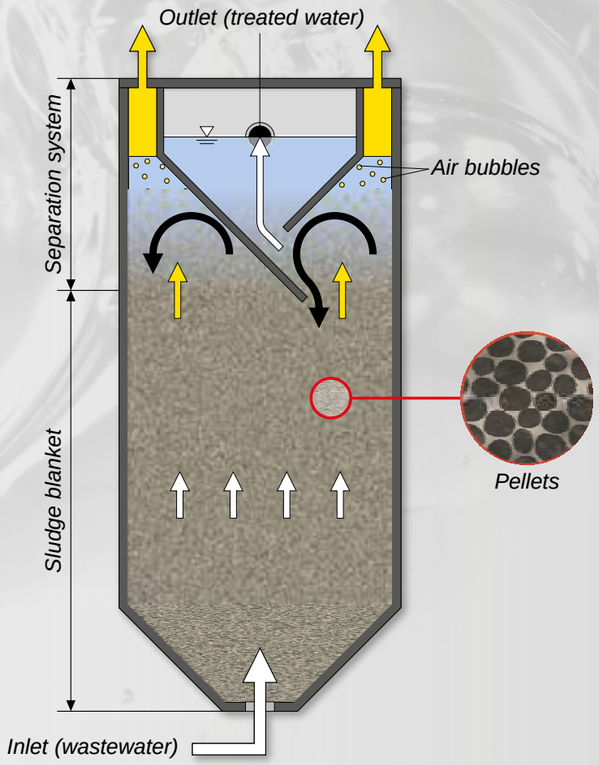

CE 702 Anaerobic Water Treatment

The illustration shows: Supply unit (left) and trainer (right)

*** Anaerobic degradation of organic substances in the stirred tank and UASB reactor**

*** 3 different operation modes**

Technical Description

CE 702 demonstrates the biological anaerobic water treatment. The trainer consists basically of two units:
- stirring tank with secondary clarifier
- UASB reactor

Both units can be used separately or in combination. This allows both a single stage and a dual stage operation mode. In the dual stage operation a pump first transports the raw water into a stirred tank. In this tank the acidification of the organic substances dissolved in the raw water takes place. Here, anaerobic microorganisms convert the long-chain organic substances into short-chain organic substances. In a secondary clarifier the biomass discharged from the stirred tank is separated from the water. The separated biomass is pumped back into the stirring tank.

From the secondary clarifier the raw water pretreated in this manner reaches a UASB reactor (UASB: Upflow Anaerobic Sludge Blanket). Here the final step of the anaerobic degradation takes place. The previously formed short-chain substances are converted by special microorganisms into biogas (methane and carbon dioxide). Flow through the UASB reactor is from the bottom to the top. At the top of the UASB reactor there is a separation system. This separates the generated gas from the treated water. It also ensures that the biomass remains in the reactor. The gas can be discharged externally or collected. The treated water exits at the top end of the reactor and is collected in a tank.

To adjust the flow velocity in the UASB reactor a of the treated water can be recirculated.

The temperatures in the stirred tank and the UASB reactor can be controlled. The pH value in the stirred tank is measured. In addition, the pH value in the UASB reactor can be controlled. A software and webcam are available for data acquisition and visual inspection.

Anaerobic biomass and analysis technology are required to perform the experiments. Recommended parameters are: COD (chemical oxygen demand), nitrogen and phosphor.

The well-structured instructional material sets out the fundamentals and provides a step-by-step guide through the experiments.

Learning Objectives / Experiments

- familiarisation with anaerobic water treatment
- effects of temperature and pH value on anaerobic degradation
- functional principle of a UASB reactor
- comparison of single stage and dual stage operation mode
- monitoring and optimisation of the operating conditions
- identification of the following influencing factors
  * sludge loading
  * volumetric loading
  * flow velocity in the UASB reactor

CE 702 Anaerobic Water Treatment

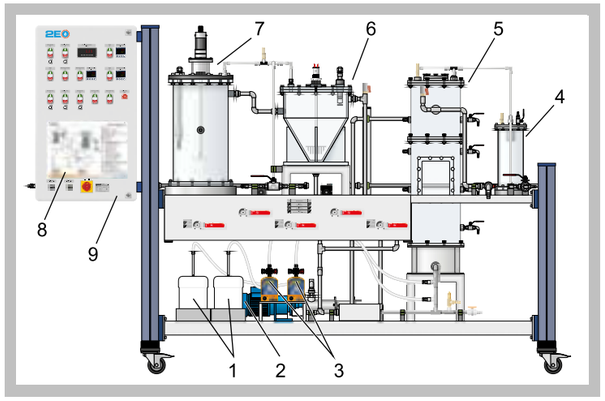

1 chemical tanks, 2 circulation pump, 3 metering pumps, 4 foam separator, 5 UASB reactor, 6 secondary clarifier, 7 stirred tank, 8 process schematic, 9 switch cabinet

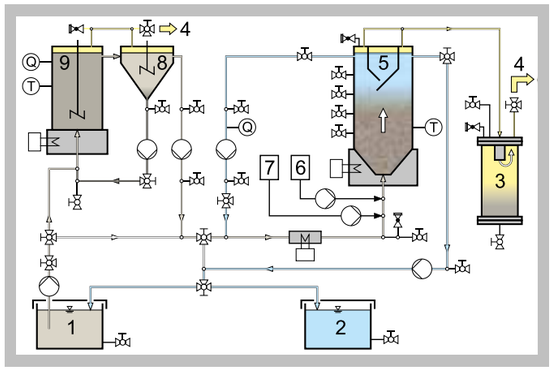

1 raw water, 2 treated water, 3 foam separator, 4 gas, 5 UASB reactor, 6 acid, 7 caustic, 8 secondary clarifier, 9 stirred tank;
T temperature, Q pH value

UASB reacor during experimental operation

Specification

[1] anaerobic degradation of organic substances
[2] stirred tank with secondary clarifier
[3] UASB reactor with separation system
[4] separate supply unit with tanks for raw water and treated water
[5] single stage or dual stage operation mode
[6] temperatures in the stirred tank and the UASB reactor can be controlled
[7] control of the pH value in the UASB reactor
[8] GUNT software for data acquisition via USB under Windows Vista or Windows 7
[9] visual inspection with webcam

Technical Data

Tanks
- stirred tank: 30L
- secondary clarifier: 30L
- UASB reactor: 50L
- tank for raw water: 180L
- tank for treated water: 180L

Flow rates (max.)
- raw water pump: 25L/h
- return sludge pump: 25L/h
- circulation pump: 100L/h
- metering pumps: 2x 2,1L/h

Measuring ranges
- pH value: 0...14
- temperature: 0...100°C

Dimensions and Weight

LxWxH: 1550x790x1150mm (supply unit)
LxWxH: 2830x790x1900mm (trainer)
Weight: approx. 520kg

Required for Operation

400V, 50/60Hz, 3 phases or 230V, 60Hz/CSA, 3 phases
Water connection, drain, sewage sludge, pellets from an UASB reactor, substances for preparation of artificial wastewater, caustic soda, hydrochloric acid

Scope of Delivery

1 trainer
1 supply unit
1 set of hoses
1 stopwatch
1 set of tools
1 GUNT software CD + USB cable
1 webcam
1 set of instructional material

Order Details

083.70200 CE 702 Anaerobic Water Treatment

2E a division of G.U.N.T Gerätebau GmbH, P.O.Box 1125, D-22885 Barsbüttel, t +49 (40)67 08 54-0, f +49 (40)67 08 54-42, E-mail sales@gunt.de
We reserve the right to modify our products without any notifications. Visit our Websites: www.gunt.de | www.gunt2e.de

THE BRAND FOR TECHNICAL TRAINING SYSTEMS IN ENERGY AND ENVIRONMENT

2E is an abbreviation for ENERGY & ENVIRONMENT

Energy and environment are essential for sustainable development.

"The next 10 years will be critical for the future of our planet. Radical measures must be taken both on climate change mitigation and adaption before we are locked into potentially irreversible, catastrophic climate transformation, whose impacts are expected to substantially change the environment and our lives on this planet."

United Nations Development Programme:
"Charting a new Low-Carbon Route to Development"
Yannik Glemarec

Engineers, scientists, technicians and skilled workers have to play an important role in this transition process...

...and it begins with education and training.

GUNT is pioneering innovative technical training systems in clean-energy technologies.

The importance of water to human and ecosystem health is addressed in a complete range of technical training equipment for water treatment.

ENERGY

We offer a wide range of technical training equipment for energy efficiency and renewable energy technologies:

- Solar Energy
- Hydropower and Ocean Energy
- Wind Power
- Biomass
- Geothermal Energy
- Energy Systems
- Energy Efficiency in Building Services Engineering

As an example:

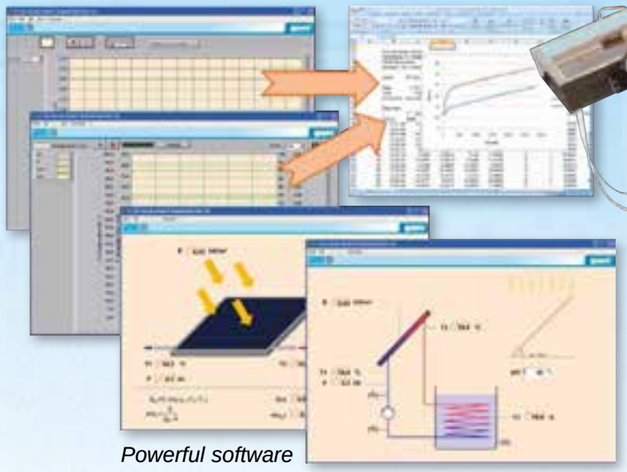

Powerful software for data acquisition and self-paced learning sequences.

ET 202 Principles of Solar Thermal Energy

Ask for our new catalogue of 2E

ENVIRONMENT

2E provides you with a wide product range for education in the field of Environment. Experts distinguish between the following areas:

- Water
- Air
- Soil
- Waste

A wide range of technical training equipment for water treatment

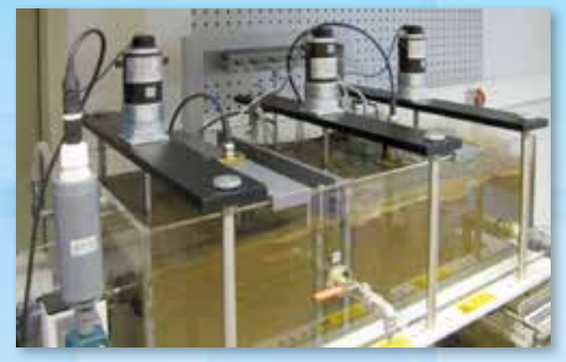

A laboratory scale plant for training and research in water treatment: Activated sludge process

CE 705 Activated Sludge Process

Visit our 2E website
www.gunt2E.de

© 2011 G.U.N.T. Gerätebau GmbH

BASIC KNOWLEDGE

ADSORPTION

One method of removing dissolved substances from water is adsorption. This method is based on physical or chemical interaction between dissolved substances and a solid phase. The dissolved substances are bound to the solid phase.

The solid phase is referred to as the adsorbent, and the dissolved substance as the adsorbate. If adsorbent is brought into contact with adsorbate for long enough, an adsorption equilibrium is established. The adsorbent is then fully charged, and can absorb no more adsorbate. The adsorbent in most widespread use is activated carbon. Activated carbon has a very distinct pore system. One gram of activated carbon has a pore surface area of approximately 1000 m².

In water treatment, adsorption is mainly implemented with continuous-flow adsorbers. In this case, the concentration profile marked in red on the illustration is established after the time ***t***. It corresponds to the trend of the adsorbate concentration in the water along the fixed bed.

This concentration profile is divided into three zones:

- Zone A

The adsorbent is fully charged and can absorb no more adsorbate. So the adsorption equilibrium has been reached. The adsorbate concentration in the water corresponds to the inlet concentration (c_0).

- Zone B

The adsorption equilibrium has not yet been reached, so adsorbate is still being adsorbed. This zone is known as the **mass transfer zone**.

- Zone C

Since the adsorbate has been fully removed from the water in zone B, the adsorbent is still non-charged here, so the adsorbate concentration is zero.

Over time, the concentration profile moves through the fixed bed in the direction of the flow. At the time ***t + Δt*** it corresponds to the blue curve. There is no longer any non-charged adsorbent remaining in the fixed bed. The adsorbate concentration in the outlet (***c****) is greater than zero. This state is termed the breakthrough, and the trend over time of the adsorbate concentration in the outlet is termed the breakthrough curve. The shape of the concentration profile indicates how well the capacity of an adsorbent is utilised before the breakthrough is reached. The narrower the mass transfer zone, the more effectively the capacity is utilised.

Applications

Adsorption on activated carbon is suitable primarily for non-polar dissolved organic substances with low water solubility. Examples include the chlorinated hydrocarbons DDT and lindane. These toxic substances often accumulate in ground water. To prevent them from entering the food chain, they must be removed in the course of remediation processes and treatment to meet drinking water quality.

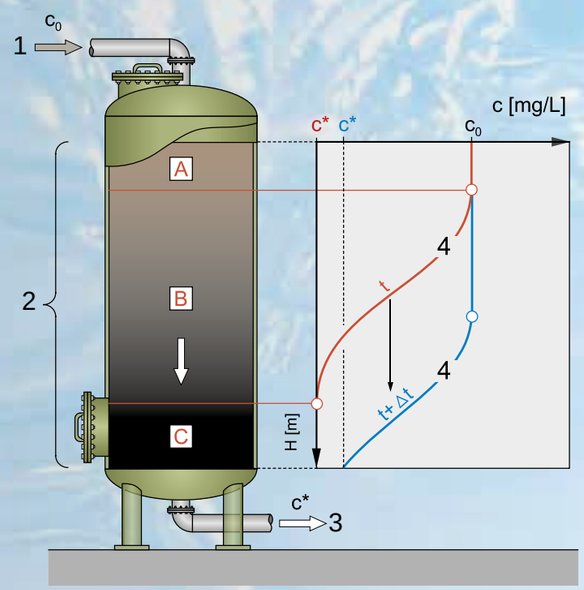

Concentration profiles in an adsorber:
1 *raw water,* ***2*** *fixed bed of activated carbon*
3 *treated water,* ***4*** *concentration profiles*
H *fixed bed height,* ***t*** *time,* ***c*** *adsorbate concentration*
c_0 *adsorbate concentration in inlet*
c* *adsorbate concentration in outlet*

BASIC KNOWLEDGE

MEMBRANE SEPARATION PROCESSES

Compared to filtration, membrane separation processes remove much smaller substances, such as viruses and dissolved ions, from the water. The driving forces of the separation process are for example differences in concentration or pressure between the two sides of the membrane. The following membrane separation processes are used in water treatment:

1. Microfiltration
2. Ultrafiltration
3. Nanofiltration
4. Reverse osmosis

The pressure difference – the so-called transmembrane pressure – increases in the sequence indicated above. At the same time the separation limit – that is, the size of the smallest separable substances – decreases. The treated water is termed permeate, and the retained portion of the raw water is retentate.

Reverse osmosis

Reverse osmosis is particularly important. This unit operation enables high purity water to be produced. It is often required for many different processes in industry and for desalination of sea water.

To understand the reverse osmosis, the osmosis first has to be explained by an example (illustration). Two salt solutions with differing concentrations are separated by a semi-permeable membrane. The membrane is only permeable to water molecules. In trying to equalise concentrations on either side, water flows from left to right through the membrane. The water level rises on the right side until a state of equilibrium is established, the – so called – osmotic equilibrium. The same salt concentration now prevails on both sides of the membrane. The resultant hydrostatic pressure difference between the two sides of the membrane is termed the osmotic pressure.

To reverse the direction of flow of the water (reverse osmosis), the osmotic pressure must be overcome. To do so, a pressure greater than the osmotic pressure is applied to the right side of the membrane. The water then flows from right to left through the membrane. The retentate is produced on the right hand side, and the permeate on the left. In the applications mentioned transmembrane pressures up to 100 bars can be required.

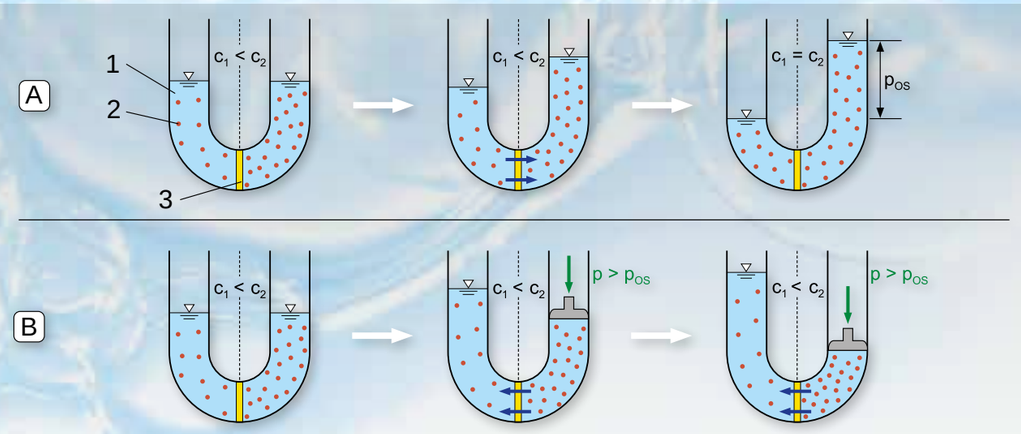

Fundamental principle of osmosis (A) and reverse osmosis (B):
1 *water,* ***2*** *salt ions,* ***3*** *semi-permeable membrane,* ***p*** *pressure,* p_{OS} *osmotic pressure*
c_1 *salt concentration on the left side of the membrane,* c_2 *salt concentration on the right side of the membrane*

CE 583 ADSORPTION

All components are clearly arranged on a mobile trainer.

The ideal way to teach and learn about adsorption in all its aspects

One method of removing dissolved substances from water is adsorption. In water treatment, adsorption is mainly implemented with continuous-flow adsorbers. The adsorbent in most widespread use is activated carbon.

- continuous process
- two adsorbers with activated carbon filling
- reuse of the treated water (closed water circuit)
- control of water temperature

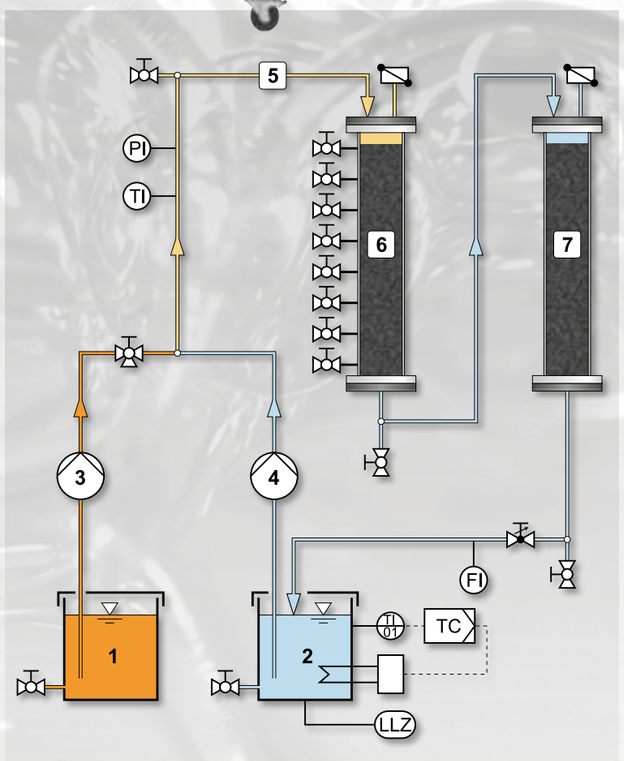

Process schematic of CE 583:
***1** concentrated adsorbate solution, **2** treated water,*
***3** metering pump, **4** treated water pump, **5** raw water,*
***6** adsorber, **7** safety adsorber*

Primary component of CE 583: adsorber with sampling points

Precise adjustement of the adsorbate concentration in the raw water using high quality pumps

Tanks for adsorbate solution and treated water made of stainless steel

EXTENSIVE RANGE OF LEARNING OBJECTIVES

- recording of concentration profiles
- recording of breakthrough curves
- relationship between concentration profiles and breakthrough curves
- determining the mass transfer zone
- an adsorber's mass balance
- an adsorber's efficiency
- predicting breakthrough curves
- scale-up of the results to industrial scale
- detection of the following influencing factors
  - contact time
  - temperature
  - mode of operation

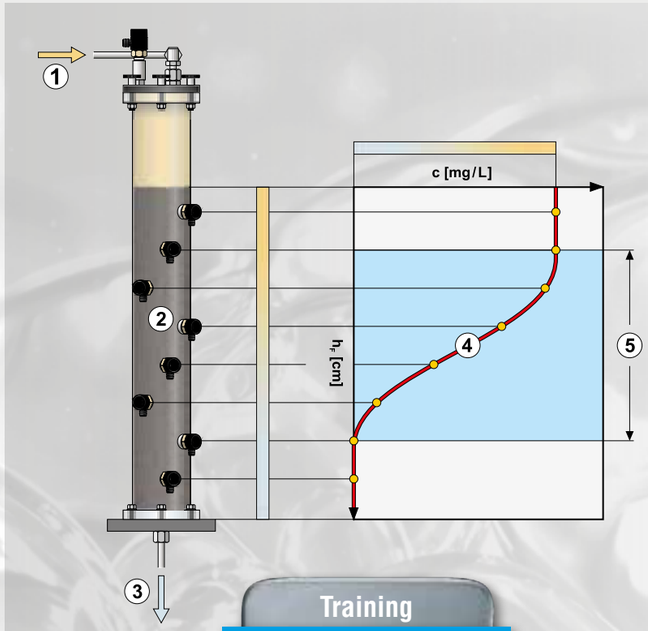

Plotting of concentration profiles with CE 583:
***1** raw water, **2** adsorber with sampling points,*
***3** treated water, **4** concentration profile,*
***5** mass transfer zone*

Training

If you require installation or training services, we will be glad to help.

THE INSTRUCTIONAL MATERIAL

We have compiled a comprehensive range of instructional material for the CE 583 which will greatly assist you in getting to know the system and in preparing your lessons and laboratory experiments and exercises.

The instructional material comprises

- detailed representation of the fundamentals
- description of the device
- detailed description of the experiments
- worksheets for the experiments
- performed reference experiments

Materials delivered as paper printouts in a folder and additionally as PDF files on a CD.

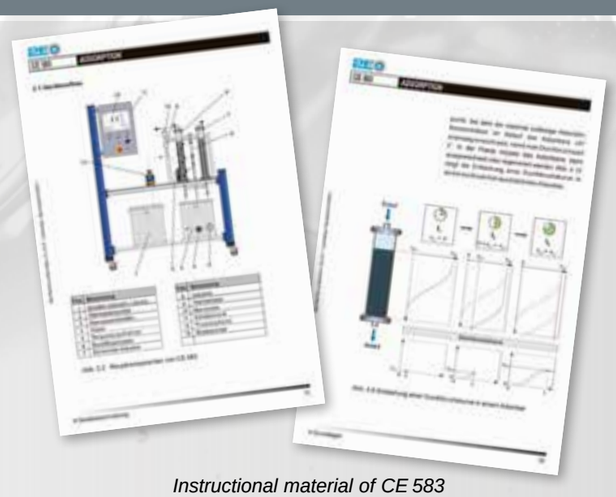

Instructional material of CE 583

CE 583 Adsorption

* **Adsorption of dissolved substances on activated carbon**
* **Concentration profiles and breakthrough curves**
* **Determination of the mass transfer zone**
* **Influence of the temperature and the contact time on adsorption**
* **Practical experiments in laboratory scale**

Technical Description

CE 583 demonstrates the removal of dissolved substances by adsorption. During adsorption the substances dissolved in the raw water are called adsorbate.

A pump transports the water from a tank in a circuit with two adsorbers filled with activated carbon. The pump transports treated water to the first adsorber. A concentrated adsorbate solution is added to the treated water flow using a metering pump. The raw water produced in this way enters the adsorber and flows through the activated carbon fixed bed. Here the adsorbate adsorbs on the activated carbon. To remove any quantities of adsorbate still present from the water, the water then flows through a second adsorber (safety adsorber). The treated water is returned to the feed line of the first adsorber where concentrated adsorbate solution is added once again. This creates a closed water circuit.

The flow rates of both pumps can be adjusted. Thereby the following parameters can be varied:
- concentration of the adsorbate in the raw water
- contact time of the raw water with the activated carbon

The water temperature can be controlled. This allows for the temperature effect of the adsorption to be investigated. Flow rate, temperature and pressure are continuously measured. Sampling points are arranged in such a way that breakthrough curves and concentration profiles can be plotted.

Analysis technology is required to evaluate the experiments. The choice of analysis technology depends on the adsorbate used. Methylene blue can e.g. be used as adsorbate. The concentration of methylene blue can be determined using a photometer.

The well-structured instructional material sets out the fundamentals and provides a step-by-step guide through the experiments.

Learning Objectives / Experiments

- recording of concentration profiles
- recording of breakthrough curves
- relationship between concentration profiles and breakthrough curves
- determining the mass transfer zone
- an adsorber's mass balance
- an adsorber's efficiency
- predicting breakthrough curves
- scale-up of the results to industrial scale
- detection of the following influencing factors
  * contact time
  * temperature
  * mode of operation

CE 583 Adsorption

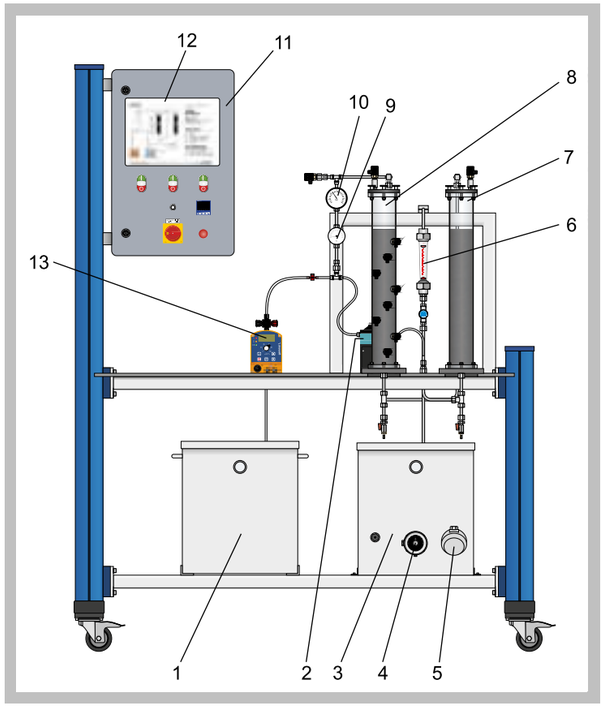

1 adsorbate solution tank, 2 circulation pump, 3 treated water tank, 4 heater, 5 temperature sensor, 6 flow meter, 7 safety adsorber, 8 adsorber, 9 thermometer, 10 manometer, 11 switch cabinet, 12 process schematic, 13 metering pump

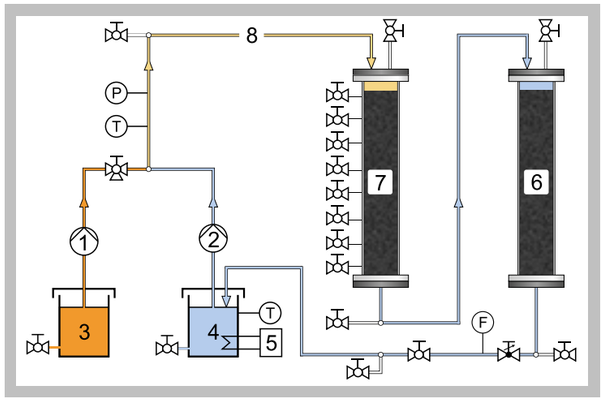

1 metering pump, 2 circulation pump, 3 concentrated adsorbate solution, 4 treated water, 5 heater, 6 safety adsorber, 7 adsorber, 8 raw water; F flow rate, P pressure, T temperature

Specification

[1] 2 adsorbers with activated carbon filling
[2] adsorber with 8 sampling points
[3] safety adsorber for closed water circuit
[4] continuous process
[5] metering pump for concentrated adsorbate solution
[6] pump for recirculating the treated water
[7] water temperature control
[8] digital temperature indication
[9] flow rate adjustable
[10] change of adsorbate concentration and contact time

Technical Data

Adsorber and safety adsorber
- inside diameter: each 60mm
- height: each 600mm
- capacity: each 1700cm³

Tanks
- treated water: 45L
- adsorbate solution: 45L

Circulation pump
- max. flow rate: 180L/h
- max. head: 10m

Metering pump
- max. flow rate: 2,1L/h
- max. head: 160m

Heater
- max. power: 500W

Measuring ranges
- flow rate: 0...60L/h
- temperature: 0...60°C
- pressure: 0...2,5bar

Dimensions and Weight

LxWxH: approx. 1500x790x1900mm
Weight: approx. 180kg

Required for Operation

230V, 50/60Hz, 1 phase or 120V, 60Hz/CSA, 1 phase
Water connection, drainage,
methylene blue (recommendation)

Scope of Delivery

1 trainer
1 packing unit of activated carbon
1 set of test tubes
1 set of tools
1 set of instructional material

Order Details

083.58300 CE 583 Adsorption

2E a division of G.U.N.T Gerätebau GmbH, P.O.Box 1125, D-22885 Barsbüttel, t +49 (40)67 08 54-0, f +49 (40)67 08 54-42, E-mail sales@gunt.de
We reserve the right to modify our products without any notifications. Visit our Websites: www.gunt.de | www.gunt2e.de

CE 530 Reverse Osmosis

The illustration shows: supply unit (left) and trainer (right)

*** Membrane separation process for obtaining solvent from a salt solution**

*** Spiral wound membrane module for separation**

*** Example application: sea water desalination**

Technical Description

This trainer has been developed in cooperation with the **Institute for Thermal Process Engineering at the TU Hamburg-Harburg**. A solution of NaCl in a defined concentration is mixed in a tank complete with a stirring machine. A pump delivers the solution to the spiral wound membrane module. The pump generates the necessary pressure for separation.

The spiral wound membrane module consists of multiple membrane envelopes. A membrane envelope is made up of two membranes with a porous spacer between them. The membrane envelope is sealed on three sides and on its fourth, open, side is connected to the perforated permeate collecting tube. There are other spacers between the envelopes to ensure axial flow of the salt solution. The spacers together with the membrane envelopes are wound spirally around the permeate collecting tube. The salt solution arrives at the front face of the module and flows axially between the envelopes. The semi-permeable membrane is permeable to water (permeate) but not to dissolved NaCl. The applied pressure forces the water through the membrane into the envelopes. In the envelopes the water flows spirally towards the permeate collecting tube and exits the module in an axial direction. As a result of the water being removed, the solution is concentrated as it travels through the module. It exits the module as retentate and is returned to the raw water tank.

The permeate is collected in a separate tank. Another tank containing distilled water is provided to flush through the spiral wound membrane module.

The pressure and flow rate can be adjusted by valves. In order to check the success of the separation, salt concentrations in the raw water, retentate and permeate are recorded by measuring the respective conductivity values.

The well-structured instructional material sets out the fundamentals and provides a step-by-step guide through the experiments.

Learning Objectives / Experiments

- assembly, cleaning and conservation of membrane modules
- fundamental principle of reverse osmosis
  * Van't Hoff's law
- permeate flow rate and retention dependent on
  * pressure
  * salt concentration in raw water
  * yield
- determination of diffusion coefficients

CE 530 Reverse Osmosis

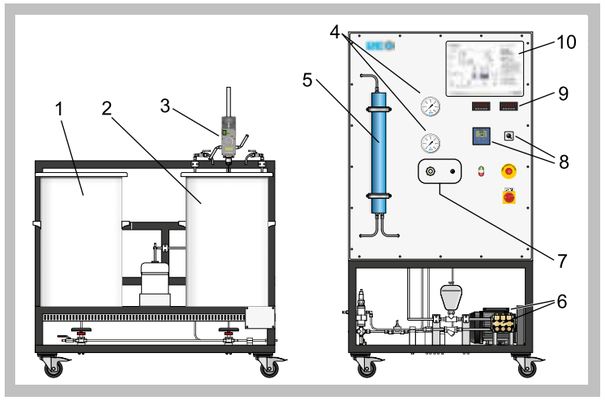

1 tank for distilled water, 2 raw water tank, 3 stirring machine, 4 manometer, 5 spiral wound membrane module, 6 pump with motor, 7 valves, 8 conductivity display and selector, 9 flow rate display, 10 process schematic

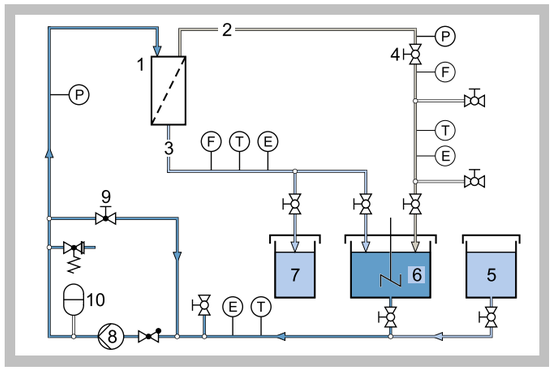

1 spiral wound membrane module, 2 retentate, 3 permeate, 4 retentate valve, 5 distilled water, 6 raw water (salt solution), 7 permeate, 8 pump, 9 overflow valve, 10 pulsation damper; P pressure, F flow rate, T temperature, E conductivity

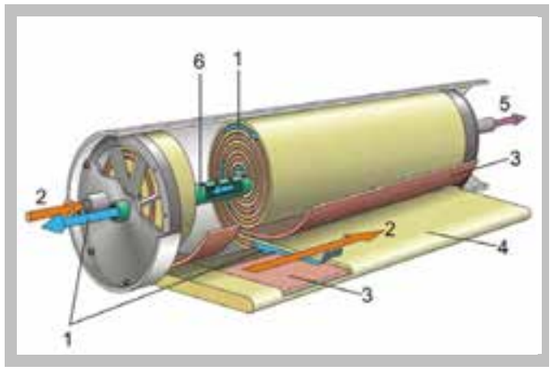

Spiral wound membrane module: 1 permeate, 2 raw water, 3 spacer, 4 membrane envelope, 5 retentate, 6 permeate collecting tube

Specification

[1] removal of solvent from a salt solution using reverse osmosis
[2] polyamide spiral wound membrane module
[3] piston pump with pulsation damper for pressure generation
[4] overflow valve to adjust the pressure upstream of the membrane module
[5] valve to adjust the retentate flow rate
[6] raw water tank with stirring machine to prepare a salt solution
[7] tank for distilled water to flush through the spiral wound membrane module
[8] tank to collect the permeate
[9] safety cutout to protect the pump against dry running

Technical Data

Spiral wound membrane module
- active area: 1,2m²
- raw water flow rate: max. 23L/min
- length: approx. 500mm
- diameter: approx. 60mm

Piston pump
- max. flow rate: approx. 425L/h
- max. head: approx. 700m

Max. operating pressure: 60bar

Stirring machine
- power consumption: 140W
- speed: 30...1000min^{-1}

Tanks
- raw water (salt solution): approx. 110L
- distilled water: approx. 110L
- permeate: approx. 5L

Measuring ranges
- retentate flow rate: 0,2...6,0L/min
- permeate flow rate: 0,05...1,8L/min
- temperature: 3x 0...50°C
- pressure: 2x 0...120bar
- conductivity: 3x 0...200mS/cm

Dimensions and Weight

LxWxH: 1250x1050x2100mm (trainer)
LxWxH: 1500x1050x1400mm (supply unit)
Weight: approx. 290kg (in total)

Required for Operation

230V, 50/60Hz, 1 phase or 120V, 60Hz, 1 phase
Water connection, drainage, sodium chloride, distilled water, sodium disulfite (conservation of the membrane module), caustic soda, hydrochloric acid

Scope of Delivery

1 trainer, 1 supply unit, 1 membrane, 1 conservation tank, 1 set of tools, 1 set of hoses, 3 conductivity sensors
1 set of instructional material

Order Details

083.53000 CE 530 Reverse Osmosis

2E a division of G.U.N.T Gerätebau GmbH, P.O.Box 1125, D-22885 Barsbüttel, t +49 (40)67 08 54-0, f +49 (40)67 08 54-42, E-mail sales@gunt.de
We reserve the right to modify our products without any notifications. Visit our Websites: www.gunt.de | www.gunt2e.de

BASIC KNOWLEDGE

ION EXCHANGE

Ion exchange is a physical / chemical process in which a solid absorbs ions from a liquid and, in exchange, discharges an equivalent amount of identically charged ions to the liquid. Positively charged ions are known as cations, and negatively charged ions as anions. Ion exchangers may be natural materials (such as zeolites) or synthetic resins (such as polystyrene or polyacrylate).

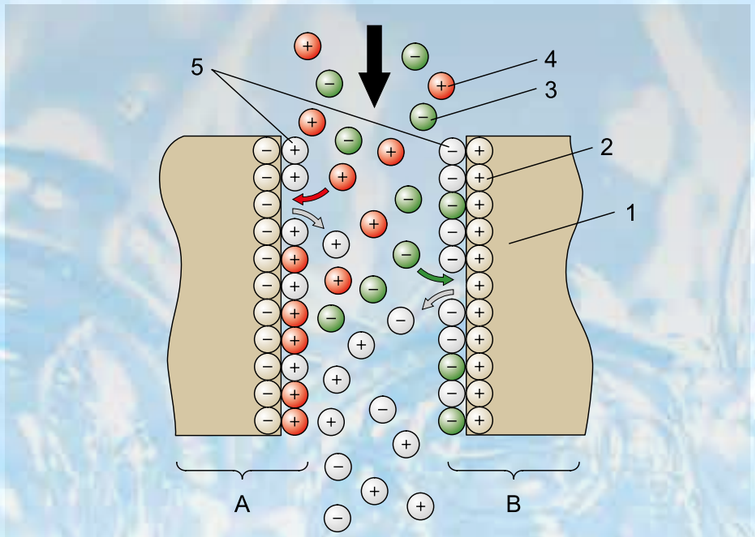

Fundamental principle of ion exchange
***A** cation exchanger, **B** anion exchanger*
***1** matrix, **2** permanently bonded ions, **3** anions, **4** cations, **5** counterions*

An ion exchanger consists of a matrix with permanently bonded ions and oppositely charged counterions. The counterions are exchanged with the ions being removed from the water.

Ion exchange is based on the principle that the higher the valence (ionic charge), the more strongly the ions are bonded to an ion exchanger. This means divalent ions are capable of being exchanged for monovalent counterions. Ion exchangers can only exchange a certain quantity of ions. When the exchange capacity is exhausted, the ion exchanger is regenerated. This utilises the fact that ion exchange depends not only on the valence of the ions involved, but also on their concentration. So a large number of ions with a low valence can displace ions with a higher valence. In regeneration therefore, the exhausted ion exchanger is converted back to its original form by a high concentration of the original counterions. In the case of cation exchangers this is done with acids, and in the case of anion exchangers with caustic.

Applications

■ Desalination

When removing salt (sodium chloride: NaCl), Na^+ ions are exchanged for H^+ ions by a cation exchanger. In an anion exchanger, the Cl^- ions in the salt are then exchanged for OH-ions. The released H^+ and OH^- ions combine to form water (H_2O).

■ Softening

When hard water is heated, lime deposits form. These can lead to damage in pipes and equipment (for example steam generation and in households). In the softening process, calcium ions (Ca^{2+}) and magnesium ions (Mg^{2+}) are removed from the water by cation exchangers

■ Detoxification

Industrial wastewater can contain toxic substances such as heavy metals, cyanides and chromates. These substances are normally present in the form of ions, and can be removed from the wastewater by ion exchange.

BASIC KNOWLEDGE

PRECIPITATION / FLOCCULATION

Precipitation and flocculation are two different processes, though in practice they are often combined. In precipitation, dissolved substances are converted into undissolved solids by a chemical reaction. This is achieved by adding a precipitant.

The solids can then be removed by means of mechanical processes such as sedimentation. However, the resultant solids (precipitation products) usually have a low density and sediment very slow. The object of flocculation is to produce larger solids with better sedimentation properties.

An important area of application for precipitation and flocculation is the removal of dissolved metals (e.g. iron).

Precipitation

A frequently used form of precipitation is **hydroxide precipitation.** This makes use of the fact that the solubility of many metals diminishes with increasing pH value. A common precipitant for hydroxide precipitation is caustic soda (NaOH). Hydroxide precipitation can be illustrated simplified in the following example:

Wastewater to be treated contains trivalent dissolved iron (Fe^{3+}) and has a pH value of approx. 2 to 3. Fe^{3+} ions are only soluble at very low pH values. By adding caustic soda (precipitant) the pH value is increased to approx. 8 to 9. The OH ions (hydroxide ions) of the caustic soda react with the Fe^{3+}-ions and form insoluble iron hydroxide: $Fe(OH)_3$.

Flocculation

The particles often are charged identically and repel each other. Therefore the particles can't aggregate into larger flocs (coagulate). Consequently, the electrostatic repulsive forces between the particles must first be eliminated. This is done using inorganic coagulants, such as metal salts. The individual particles can then aggregate into micro-flocs. This first phase of the flocculation process is termed **coagulation.**

In the second phase – the actual **flocculation** – flocculants are added into the wastewater. These agents are organic polymers. They adhere to the micro-flocs, enabling them to be interconnected. The resultant flocs are termed macro-flocs.

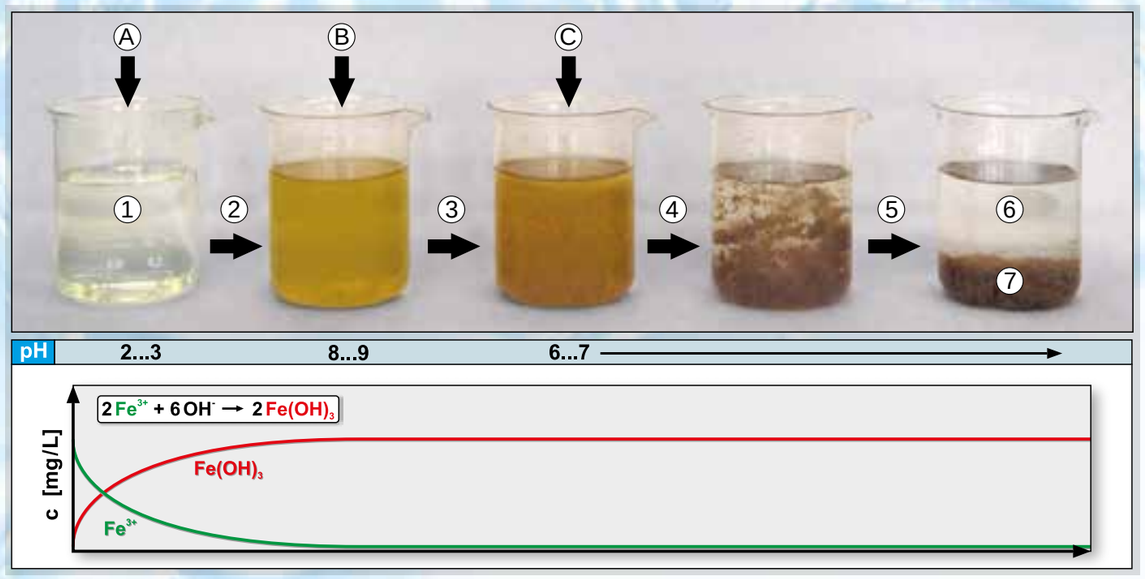

Hydroxide precipitation of dissolved iron (Fe^{3+}) followed by flocculation:
***1** wastewater, **2** precipitation, **3** coagulation, **4** flocculation, **5** sedimentation, **6** treated water, **7** iron hydroxide $Fe(OH)_3$*
***A** precipitant (NaOH), **B** coagulant, **C** flocculant*

CE 300 *Ion Exchange*

*** Softening and desalination of water by ion exchange**

*** Regeneration of ion exchangers**

*** Cation and anion exchanger**

Technical Description

Ion exchangers are used in water treatment primarily for desalination and softening. CE 300 enables these processes to be demonstrated with the aid of cation and anion exchangers.

The raw water is pumped from the tank into the top of the cation exchanger. In the softening process the water flows from there back into the collecting tank. To desalinate the raw water, it is then additionally routed through the anion exchanger. From there the treated water passes into the collecting tank. In the regeneration process, acid or caustic is fed into the ion exchangers from below using the same pump. The acid and caustic used is collected in the collecting tank.

The flow rate of the pump is adjustable, and can be read from a flow meter before it enters the first ion exchanger. For continuous evaluation of the process, a conductivity sensor is installed upstream of the inlet into the collecting tank. The measured values can be read from a conductivity meter. Samples can be taken at all relevant points. Tap water can be used as raw water.

The well-structured instructional material sets out the fundamentals and provides a step-by-step guide through the experiments.

Learning Objectives / Experiments

- learning the fundamental principle of softening and desalination by ion exchange
- identification of the different modes of operation of cation and anion exchangers
- combined use of cation and anion exchangers for desalination
- exchanging capacities and regeneration
- verification of the theoretically calculated regeneration time

CE 300 *Ion Exchange*

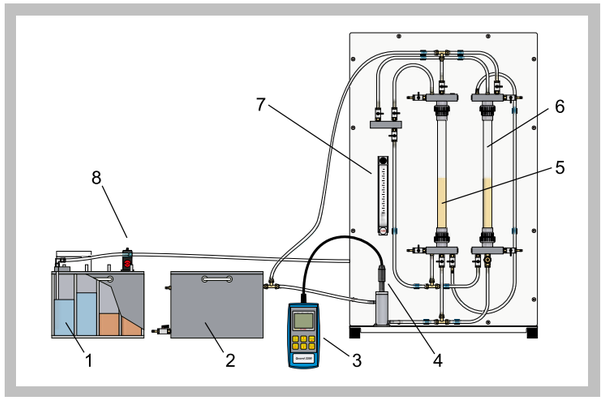

1 tank for raw water, rinsing water, acid and caustic, 2 collecting tank, 3 conductivity meter, 4 conductivity sensor, 5 cation exchanger, 6 anion exchanger, 7 flow meter, 8 pump

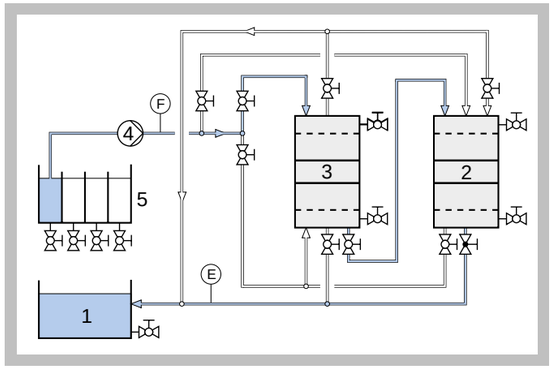

Flow path with the two ion exchangers configured in series (desalination):
1 collecting tank, 2 anion exchanger, 3 cation exchanger, 4 pump,
5 raw water tank; E conductivity, F flow rate

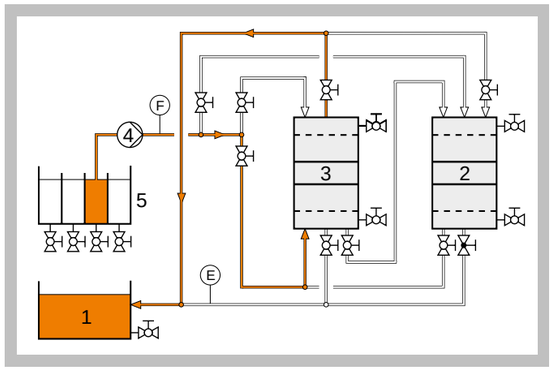

Flow path with cation exchanger regeneration:
1 collecting tank, 2 anion exchanger, 3 cation exchanger, 4 pump,
5 acid tank

Specification

[1] softening and desalination with ion exchange
[2] cation and anion exchangers usable separately and in combination
[3] regeneration of ion exchangers
[4] tank with 4 chambers for raw water, rinsing water, acid and caustic
[5] diaphragm pump to transport raw water, rinsing water, acid and caustic
[6] collecting tank for treated water, rinsing water, acid and caustic
[7] continuous measurement of conductivity and flow rate

Technical Data

Ion exchanger
- material: network polymer
- cation exchanger: H^+ form
- anion exchanger: OH^- form

Diaphragm pump
- max. flow rate: 300mL/min
- max. head: 10m

Tank
- 4 chambers
- capacity: each approx. 5L
- material: PVC

Collecting tank
- capacity: approx. 20L
- material: PVC

Measuring ranges
- flow rate: 20...270mL/min
- conductivity: 0...2000µS/cm

Dimensions and Weight

LxWxH: approx. 610x510x1010mm (experimental unit)
LxWxH: approx. 350x480x310mm (tank, 4 chambers)
LxWxH: approx. 440x540x230mm (collecting tank)
Weight: approx. 46kg

Required for Operation

230V, 50/60Hz, 1 phase or 120V, 60Hz/CSA, 1 phase
Water connection, caustic soda, hydrochloric acid, distilled water

Scope of Delivery

1 experimental unit
2 tanks
1 conductivity sensor
1 conductivity meter
1 packing unit of cation exchanger
1 packing unit of anion exchanger
1 set of hoses
1 set of instructional material

Order Details

083.30000 CE 300 Ion Exchange

2E a division of G.U.N.T Gerätebau GmbH, P.O.Box 1125, D-22885 Barsbüttel, t +49 (40)67 08 54-0, f +49 (40)67 08 54-42, E-mail sales@gunt.de
We reserve the right to modify our products without any notifications. Visit our Websites: www.gunt.de | www.gunt2e.de

CE 586 PRECIPITATION AND FLOCCULATION

Practical Education in Water Treatment

Precipitation and flocculation is a physical/chemical process in water treatment. The removal of dissolved metals is one of the main applications of this process. It is often required for the production of drinking water and for treatment of contaminated ground water.

CE 586 enables this process to be teached very practically.

Supply unit *Trainer*

CONTINUOUS AND PRACTICAL PROCESS

1 Precipitation tank

Precipitation of dissolved substances

2 Flocculation tank

Formation of flocs by coagulation and flocculation

3 Lamella separator

Separation of the flocs by sedimentation

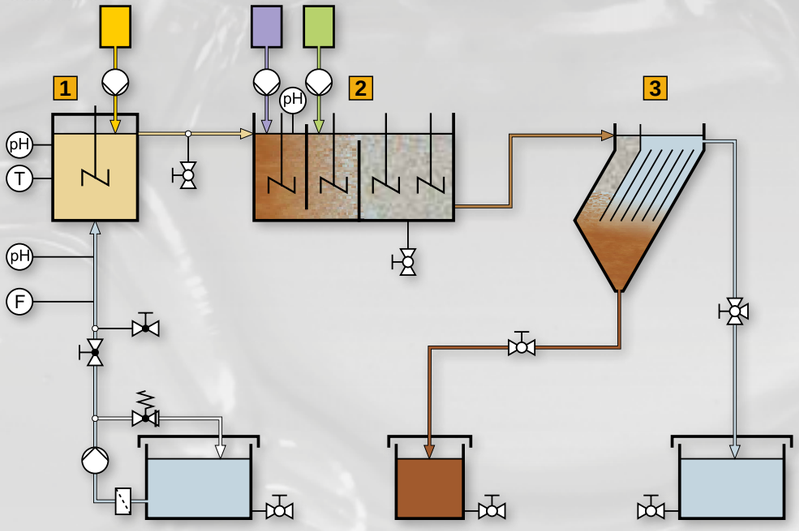

Metering pumps

Precise addition of chemicals by use of industrial metering pumps

INSTRUMENTATION AND CONTROL

- use of high quality instrumentation
- flow rate sensor
- conductivity sensor
- temperature sensor
- control of pH value in the precipitation tank

You can find an interesting film of CE 586 on our 2E website **www.gunt2E.de**

SWITCH CABINET

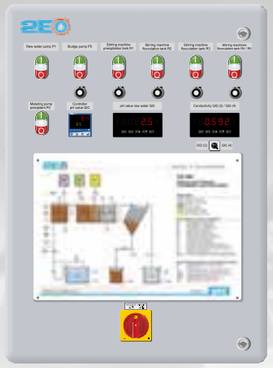

- controls of all primary components
- controls arranged very clearly
- digital displays for measured values
- digital controller for pH value

A large, clear process schematic on the switch cabinet makes it easy to assign all the components.

THE INSTRUCTIONAL MATERIAL

The well-structured instructional material sets out the fundamentals and provides a step-by-step guide through the experiments. Materials delivered as paper printouts in a folder and additionally as PDF files on a CD.

Updates

When any updates or additions to the CE 586 are made – in particular with regard to the instructional material – you, as a GUNT customer, will be notified accordingly.

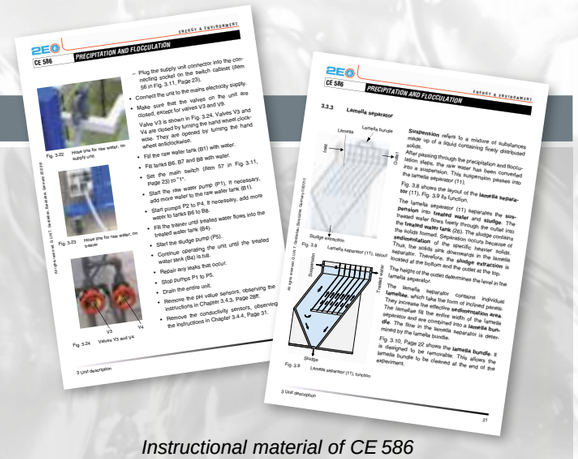

Instructional material of CE 586

BUE The British University in Egypt الجامعة البريطانية في مصر Department of Civil Engineering

A staff member of the British University in Egypt (Cairo) explains how CE 586 works.

CE 586 Precipitation and Flocculation

The illustration shows: Supply unit (left) and trainer (right).

*** Removal of dissolved substances (e.g. iron) by precipitation and flocculation**

*** Sedimentation of the flocs in the lamella separator**

Technical Description

CE 586 demonstrates the removal of dissolved substances by precipitation and flocculation with subsequent sedimentation.

First, raw water is produced in a tank to contain dissolved metal (e.g. iron). A pump transports the raw water to the precipitation tank. Here the precipitant is added (e.g. caustic soda). Due to the reaction of the dissolved metal ions with the precipitant, insoluble metal hydroxides form (solids). From here the water flows into a flocculation tank divided into three chambers. The purpose of flocculation is to improve the sedimentation properties of the solids. By adding a coagulant in the first chamber the repulsive forces between the solid particles are cancelled out. The solid particles aggregate into flocs (coagulation). To generate larger flocs, a flocculant is then added (flocculation). In the third chamber low flow velocities are present to prevent any turbulence. Turbulence would impede the formation of flocs. The now well sedimentable flocs are then separated from the treated water in a lamella separator. The treated water and the sedimented flocs (sludge) are collected in two tanks.

Flow rate, temperature and the pH value are measured. In addition, the pH value in the precipitation tank can be controlled. For measuring the conductivity an external meter is available. Samples can be taken at all relevant points.

Analysis technology is required to analyse the experiments. The choice of analysis technology depends on the substances used. Trivalent metallic salts are usually well suited as coagulants. Common flocculants are organic polymers.

The well-structured instructional material sets out the fundamentals and provides a step-by-step guide through the experiments.

Learning Objectives / Experiments

- familiarisation with precipitation and flocculation
- effect of the pH value on precipitation
- creation of a stable operating state
- determination of the required metering quantities (precipitant, coagulant, flocculant)
- functional principle of a lamella separator

CE 586 Precipitation and Flocculation

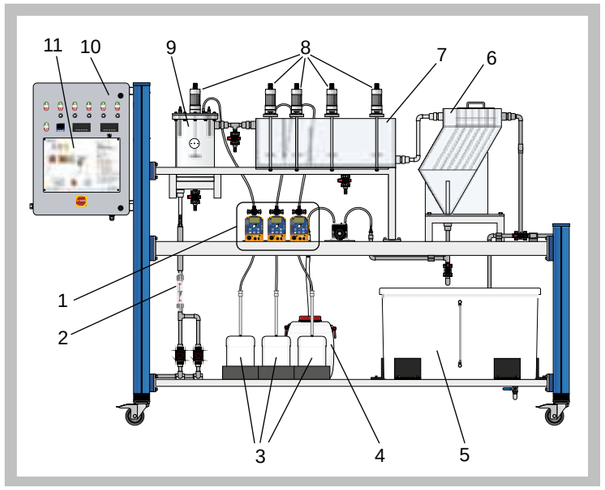

1 metering pumps, 2 flow meter, 3 chemicals tank, 4 sludge tank, 5 treated water tank, 6 lamella separator, 7 flocculation tank, 8 stirring machines, 9 precipitation tank, 10 switch cabinet, 11 process schematic

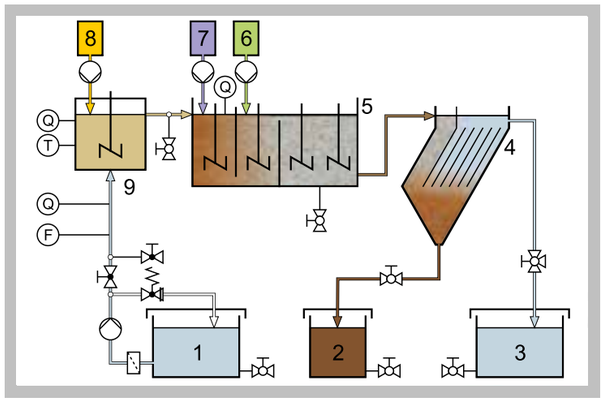

1 raw water, 2 sludge, 3 treated water, 4 lamella separator, 5 flocculation tank, 6 flocculant, 7 coagulant, 8 precipitant, 9 precipitation tank; F flow rate, Q pH value, T temperature

Specification

[1] precipitation and flocculation of dissolved substances (e.g. iron)
[2] separate supply unit with tank and pump for raw water
[3] precipitation tank with stirring machine
[4] flocculation tank with 3 chambers and 4 stirring machines
[5] 3 metering pumps for chemicals
[6] sedimentation of the flocs in the lamella separator
[7] measurement of flow rate, temperature and pH value
[8] control of the pH value in the precipitation tank
[9] conductivity meter

Technical Data

Tanks
- raw water and treated water: each 300L
- precipitation tank: 10L
- flocculation tank: 45L
- sludge tank: 15L

Lamella separator
- number of lamellas: 6
- angle of inclination of lamellas: 60°

Raw water pump
- max. flow rate: 180L/h
- max. head: 10m

Metering pumps
- max. flow rate: each 2,1L/h
- max. head: each 160m

Stirring machines
- max speed: each 600min^{-1}

Measuring ranges
- flow rate: 15...160L/h
- pH value: 0...14
- temperature: 0...60°C
- conductivity: 0...2000µS/cm

Dimensions and Weight

LxWxH: 1550x790x1150mm (supply unit)
LxWxH: 3100x790x1950mm (trainer)
Total weight: approx. 435kg

Required for Operation

230V, 50/60Hz, 1 phase or 120V, 60Hz, 1 phase
Water connection, drainage, iron(III) chloride, iron(III) sulfate, flocculant, caustic soda, hydrochloric acid

Scope of Delivery

1 trainer
1 supply unit
1 conductivity meter
0,5L calibration solution (potassium chloride)
1 set of hoses
1 set of instructional material

Order Details

083.58600 CE 586 Precipitation and Flocculation

2E a division of G.U.N.T Gerätebau GmbH, P.O.Box 1125, D-22885 Barsbüttel, t +49 (40)67 08 54-0, f +49 (40)67 08 54-42, E-mail sales@gunt.de
We reserve the right to modify our products without any notifications. Visit our Websites: www.gunt.de | www.gunt2e.de

INSTRUCTIONAL MATERIAL AND SOFTWARE

GUNT's policy is:
High-quality hardware and clearly laid-out instructional materials ensure the teaching and learning success of an experimental unit. The core elements of the instructional material provided to accompany the units are reference experiments conducted by ourselves. The description of the experiment incorporates the detailed set-up, through to interpretation of the results obtained. A group of experienced engineers devise and maintain the accompanying instructional material.

Our software – in our context meaning computerised data acquisition programs – always comes with comprehensive online help to explain the features offered the detailed use of the program. GUNT software is developed and written in-house by another group of experienced engineers.

BASIC KNOWLEDGE

CHEMICAL OXIDATION

Industrial wastewaters or contaminated ground waters often contain non-biodegradable organic substances. These include, for example, chlorinated hydrocarbons. These substances can be chemically oxidised and so removed from the water. There are always two components involved in oxidation: the substance being oxidised and the oxidant. The oxidant absorbs electrons and is reduced. The substance being oxidised gives off electrons in return.

Organic substances are oxidised in stages, with intermediate products being formed along the way. Where organic substances are fully oxidised, they are converted into the inorganic end products water and carbon dioxide.

Advanced oxidation processes

Oxidation processes are termed advanced when hydroxyl radicals (OH radicals) are used as the oxidants. The basic feature of radicals is the presence of a single free electron in place of an electron pair. This is indicated in the formula by a dot (·OH). This electron provides the OH radical with a very high reactivity. OH radicals are very strong oxidants, and are capable of oxidising virtually any organic substance.

One method of producing OH radicals is to irradiate hydrogen peroxide (H_2O_2) with UV light. Hydrogen peroxide absorbs the UV radiation, splitting into two OH radicals (photolysis). In this way, two OH radicals can be obtained from one hydrogen peroxide molecule.

Application in water treatment

This process is applied in practice by adding hydrogen peroxide to the water being treated and then irradiating the water with UV lamps. The efficacy of this process depends to a large degree on the quantity of OH radicals produced. Their number rises with the quantity of source material and the intensity of the UV radiation. However, the high energy consumption of UV lamps means that increasing the radiation intensity at will is not economically viable.

Advanced oxidation can also be combined with biological processes. Then, organic substances are first chemically oxidised until biodegradable intermediate products are created.

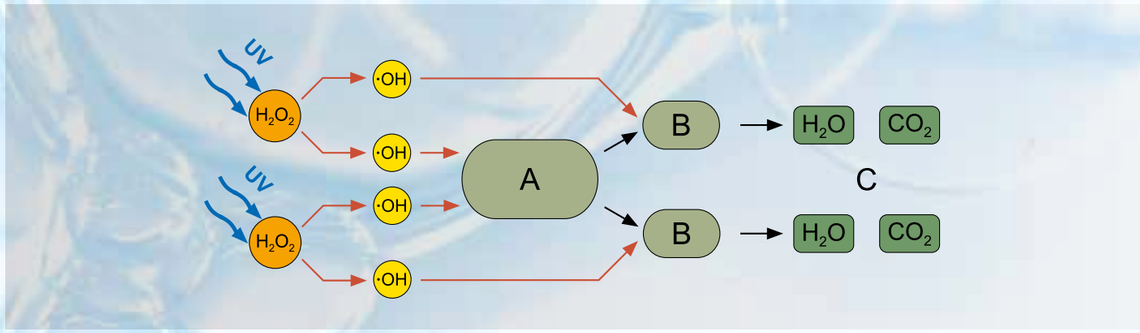

Fundamental principle of advanced oxidation with hydrogen peroxide and UV radiation:
***H_2O_2** hydrogen peroxide, **·OH** hydroxyl radical*
***A** non-biodegradable organic substance, **B** organic intermediate products, **C** inorganic end products*

CE 584 Advanced Oxidation

*** Oxidation of organic substances with hydrogen peroxide (H_2O_2) and UV light**

*** Discontinuous operation with falling film reactor**

Technical Description

In water treatment oxidation processes are used to remove organic substances which are not biodegradable. If the oxidation is by hydroxyl radicals (OH radicals) it is called "advanced oxidation". A common method for forming hydroxyl radicals is the irradiation of hydrogen peroxide with UV light. CE 584 demonstrates this process using a discontinuous falling film reactor.

The falling film reactor consists of a transparent tube which is open at the bottom. At the top of the tube there is a circular channel. Using a pump the raw water enriched with hydrogen peroxide is transported from a tank into the channel. From here the water flows as a thin falling film along the inside wall of the tube back into the tank. This creates a closed water circuit. At the centre of the tube there is a UV lamp. By irradiation of the falling raw water with UV light hydroxyl radicals form from the hydrogen peroxide molecules. The hydroxyl radicals oxidate the organic non-biodegradable substances in the raw water. As protection against the radiation the UV lamp is fitted with a protective tube.

The flow rate and temperature of the water are continuously measured. The temperature is indicated digitally in the switch cabinet. Samples can be taken at the tank.

E.g. triethylene glycol dimethyl ether can be used to produce the raw water. Analysis technology is required to evaluate the experiments.

The well-structured instructional material sets out the fundamentals and provides a step-by-step guide through the experiments.

Learning Objectives / Experiments

- familiarisation with oxidation with hydrogen peroxide and UV light
- recording of degradation curves for the investigation of reaction kinetics
- influence of the hydrogen peroxide quantity on the process

CE 584 Advanced Oxidation

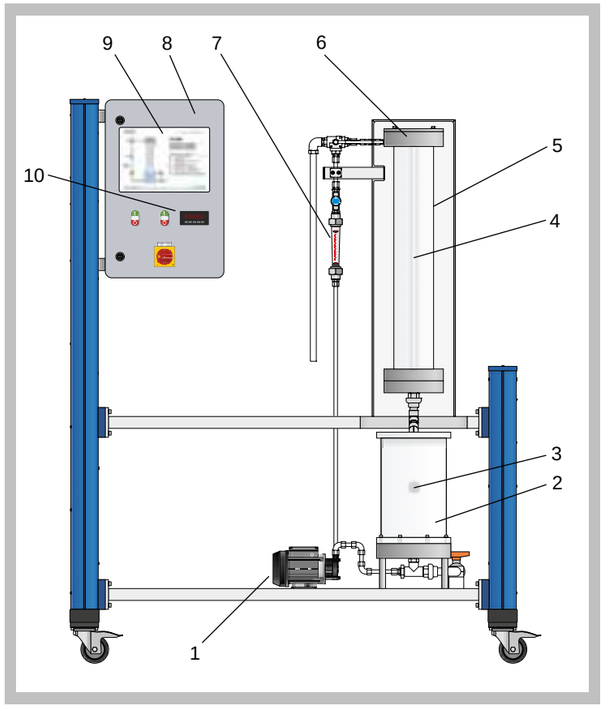

1 pump, 2 tank, 3 temperature sensor, 4 UV lamp with protective tube, 5 falling film reactor (tube), 6 channel, 7 flow meter, 8 switch cabinet, 9 process schematic, 10 digital temperature display

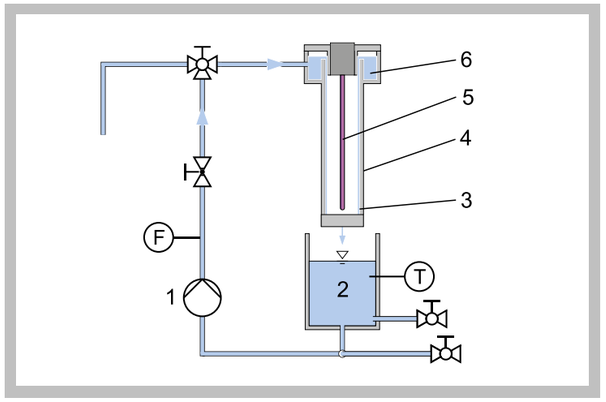

1 pump, 2 tank, 3 falling film, 4 falling film reactor (tube), 5 UV lamp, 6 channel; F flow rate, T temperature

Specification

[1] advanced oxidation process
[2] use of hydrogen peroxide and UV light
[3] formation of hydroxyl radicals (OH radicals)
[4] falling film reactor with UV lamp
[5] discontinuous operation
[6] flow rate adjustable
[7] measurement of temperature and flow rate
[8] digital temperature indication
[9] protection device against UV radiation

Technical Data

Falling film reactor (tube)
- diameter: 130mm
- height: 1000mm
- material: glass

UV lamp
- emitted wavelength: 254nm
- power: 120W

Pump
- max. flow rate: 360L/h
- max. head: 9m

Tank
- capacity: 10L

Measuring ranges
- flow rate: 30...320 L/h
- temperature: 0...50°C

Dimensions and Weight

LxWxH: 1510x790x1900mm
Weight: approx. 170kg

Required for Operation

230V, 50/60Hz, 1 phase or 120V, 60Hz, 1 phase
Water connection, drainage, hydrogen peroxide, triethylene glycol dimethyl ether (recommendation)

Scope of Delivery

1 trainer
2 buckets
2 beakers
1 set of instructional material

Order Details

083.58400 CE 584 Advanced Oxidation

BASIC KNOWLEDGE

COMBINED PROCESSES

Wastewater usually contains large numbers of substances with different properties. Consequently, a single unit operation is not usually sufficient to treat the water. That is why water treatment plants always combine several individual unit operations. The unit operations are selected primarily based on the properties of the raw water and the treated water quality requirements. One treatment target can often be achieved with different combinations. The question of which combination is most suitable must be investigated for each application. Economic factors are often the key to this decision.

Areas of application for water treatment plants:

- drinking water purification
- treatment of communal and industrial wastewater
- production of process water within industry
- treatment of contaminated ground water (remediation of contaminated sites)

For many industrial processes water with specific properties is required (e.g. hardness, pH value, salt content). At the same time heavily contaminated wastewater is produced in many production processes which cannot be discharged directly into a wastewater treatment plant. Therefore, a water treatment plant is integrated into many production processes. The treated wastewater can then either be discharged into the sewer or reused for the production process.

Such production processes occur, for example, in the following industries:

- food industry
- textile industry
- paper industry

The figure shows by way of example a multi-stage water treatment plant (A) integrated into an industrial production process (B). First the wastewater is treated mechanically. This protects the downstream plant components (e.g. pumps and pipes) against potential damage and clogging. Coarse solids are removed in a lamella separator (2) by sedimentation. Next, non-sedimentable solids are separated in a sand filter (4) by depth filtration. The thus mechanically cleaned wastewater contains no more solids and is then treated using physical/chemical processes. Dissolved organic substances (e.g. chlorinated hydrocarbons) are removed by adsorption in activated carbon in an adsorber (5). In the final stage an ion exchange takes place (6). This can e.g. be used to remove heavy metals from the wastewater or desalinate the wastewater.

The treated water is collected in a collector tank (7). The treated water can now either be discharged into the sewer (8) or returned to the production process (9). This creates a closed water circuit within the production process reducing the costs of wastewater disposal.

Example of an industrial water treatment plant:

1 *wastewater*
2 *lamella separator (sedimentation)*
3 *collecting tank*
4 *sand filter*
5 *adsorber (activated carbon)*
6 *ion exchanger*
7 *collecting tank for treated water*
8 *discharge of the treated water into the sewer*
9 *reuse of the treated water*

A *water treatment plant*
B *production*

CE 581 Water Treatment Plant 1

The illustration shows: Supply unit (left) and trainer (right)

*** Example of a water treatment plant**

*** Depth filtration: removal of undissolved substances**

*** Adsorption: removal of dissolved substances**

*** Ion exchange: softening and desalination**

Technical Description

Depth filtration, adsorption and ion exchange are key unit operations in water treatment. CE 581 enables these three operations to be demonstrated.

The raw water is pumped from above into a gravel filter and then routed into a sand filter. In the process, suspended solids are removed from the raw water. The filtered water then flows into the second treatment stage. There dissolved substances are removed by adsorption on aluminium oxide and on activated carbon. Then the water passes on to the third treatment stage. In this stage unwanted ions are removed from the water by ion exchange. First the water is softened by cation exchange. The water is then desalinated in a mixed bed ion exchanger containing cation and anion exchangers.

The separate supply unit includes pumps and tanks for the raw water and treated water. The raw water tank can be aerated. This ensures the raw water is mixed through. It also enables dissolved substances (such as iron) to be precipitated so as to then filter them. A connection to backwash the sand filters is provided.

The flow rate, temperature, conductivity, differential pressure and system pressure are measured. Samples can be taken at all relevant points. A software program is provided to control the operating states and measure data. A process schematic shows the current operating states of the individual components and the measured data.

The well-structured instructional material sets out the fundamentals and provides a step-by-step guide through the experiments.

Learning Objectives / Experiments

- learning the fundamental principle of the unit operations depth filtration, adsorption and ion exchange
- observation and determination of the pressure loss in depth filtration
- plotting of breakthrough curves (adsorption)
- comparison of various adsorption materials
- familiarisation with the fundamental principle of ion exchange

CE 581 Water Treatment Plant 1

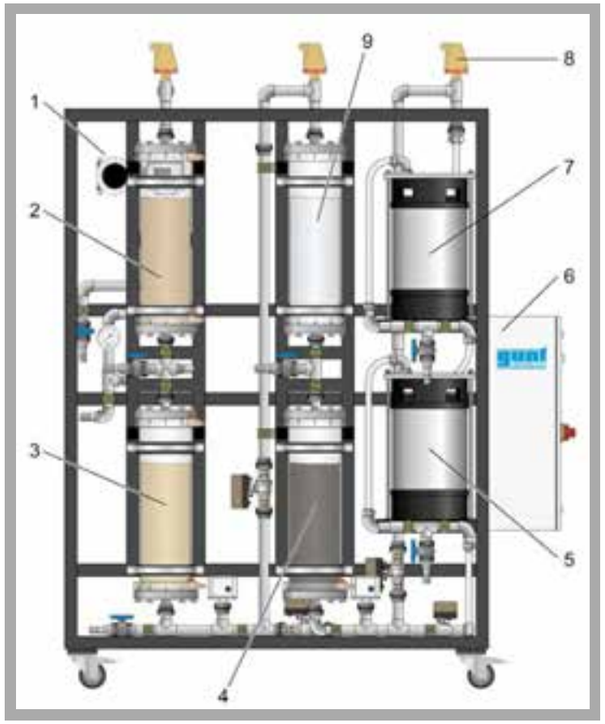

1 electromagnetic flow rate sensor, 2 gravel filter, 3 sand filter, 4 adsorber (activated carbon), 5 cation exchanger, 6 switch cabinet, 7 mixed bed ion exchanger, 8 bleed valve, 9 adsorber (aluminium oxide)

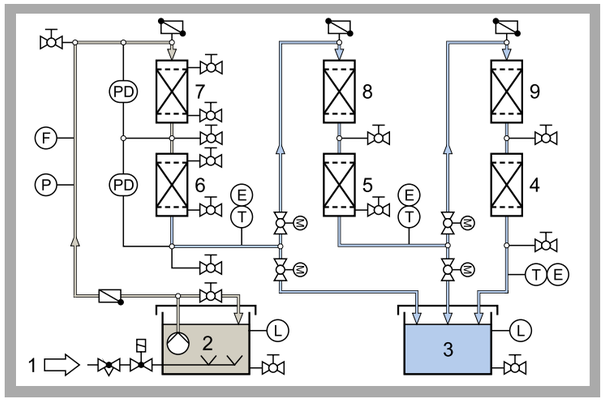

1 external compressed air supply, 2 raw water, 3 treated water, 4 mixed bed ion exchanger, 5 adsorber (activated carbon), 6 sand filter, 7 gravel filter, 8 adsorber (aluminium oxide), 9 cation exchanger; E conductivity, F flow rate, L level, P system pressure, PD differential pressure, T temperature

Specification

[1] 3 unit operations in water treatment: depth filtration, adsorption, ion exchange
[2] gravel filter, sand filter, aluminium oxide adsorber, activated carbon adsorber, cation exchanger, mixed bed ion exchanger
[3] separate supply unit with tanks for raw water and treated water
[4] raw water tank with possibility of aeration
[5] gravel filter and sand filter with differential pressure measurement
[6] flow rate measurement of raw water
[7] measurement of conductivity and temperature after each treatment stage
[8] GUNT software with control functions and data acquisition via USB under Windows Vista or Windows 7

Technical Data

Raw water pump
- max. flow rate: 25m³/h
- max. head: 20m

Gravel filter, sand filter and adsorbers
- diameter: each 200mm
- height: each 650mm

Ion exchanger tank
- diameter: each 240mm
- height: each 410mm

Tanks for raw water and treated water
- capacity: each approx. 180L

Measuring ranges
- flow rate: 0...1300L/h
- system pressure: 0...4bar
- differential pressure: 0...2.5bar
- conductivity: 0...600µS/cm
- temperature: 0...100°C

Dimensions and Weight

LxWxH: 1300x800x950mm (supply unit)
LxWxH: 1680x800x2135mm (trainer)
Total weight: approx. 270 kg

Required for Operation

230V, 50Hz, 1 phase
Water connection, drainage, compressed air (recommendation), substances for preparation of the raw water

Scope of Delivery

1 trainer
1 supply unit
1 packing unit of sand
1 packing unit of gravel
1 packing unit of aluminium oxide
1 packing unit of activated carbon
1 set of hoses
1 GUNT software CD + USB cable
1 set of instructional material

Order Details

083.58100 CE 581 Water Treatment Plant 1

2E a division of G.U.N.T Gerätebau GmbH, P.O.Box 1125, D-22885 Barsbüttel, t +49 (40)67 08 54-0, f +49 (40)67 08 54-42, E-mail sales@gunt.de
We reserve the right to modify our products without any notifications. Visit our Websites: www.gunt.de | www.gunt2e.de

CE 582 Water Treatment Plant 2

The illustration shows from left to right: manometer panel, trainer, supply unit.

*** Example of a water treatment plant**

*** Depth filtration and ion exchange**

*** Backwash of sand filters and regeneration of ion exchangers**

Technical Description

Depth filtration with sand filters and ion exchange are key unit operations in water treatment. CE 582 enables these two operations to be demonstrated.

The raw water is pumped from above into a sand filter. Solids are captured and retained as the raw water flows through the filter bed. The filtered water emerges from the bottom end of the sand filter and then flows through two ion exchangers (cation and anion exchangers). In the process, unwanted ions are exchanged for hydrogen and hydroxide ions. The raw water is softened and desalinated. The sand filter and the two ion exchangers can be used in combination or separately. The solids deposited in the sand filter result in an increase in pressure loss. Backwashing cleans the filter bed and reduces the pressure loss. The ion exchangers can be regenerated with acid or caustic.

The sand filter is equipped with a differential pressure measurement. There are also several pressure measuring points along the filter bed. The pressures are transmitted to tube manometers via hoses and displayed there as water columns. This can be used to plot Micheau diagrams. The flow rate, temperature, conductivity, differential pressure and system pressure are measured. The flow velocity in the filter bed (filter velocity) can be adjusted. Samples can be taken at all relevant points. E.g. diatomite can be used to produce the raw water.

A software program is provided to control the operating states and measure data. A process scematic shows the current operating states of the individual components and the measured data.

The well-structured instructional material sets out the fundamentals and provides a step-by-step guide through the experiments.

Learning Objectives / Experiments

- learning the fundamental principle of the unit operations depth filtration and ion exchange
- observation and determination of pressure losses in a sand filter
- plotting of Micheau diagrams
- principle of backwash
- identification of the different modes of operation of cation and anion exchangers
- regeneration of ion exchangers

CE 582 Water Treatment Plant 2

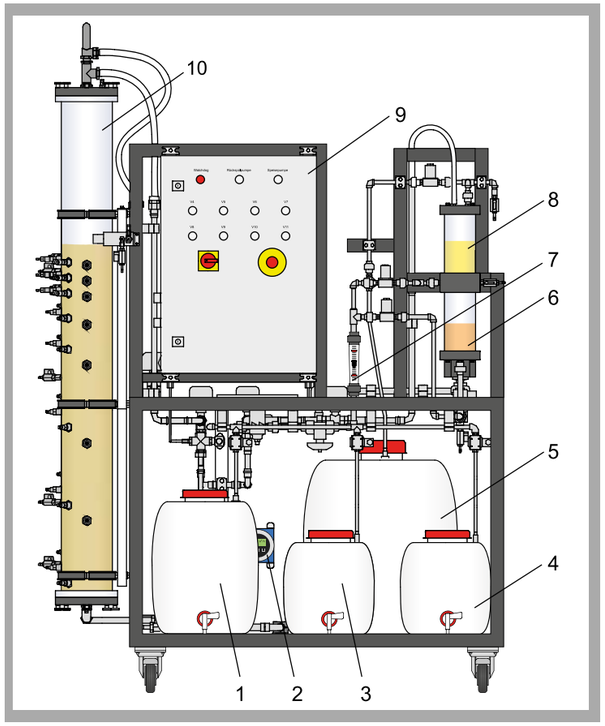

1 rinsing water tank, 2 electromagnetic flow rate sensor, 3 acid tank, 4 caustic tank, 5 collecting tank, 6 cation exchanger, 7 flow meter, 8 anion exchanger, 9 switch cabinet, 10 sand filter

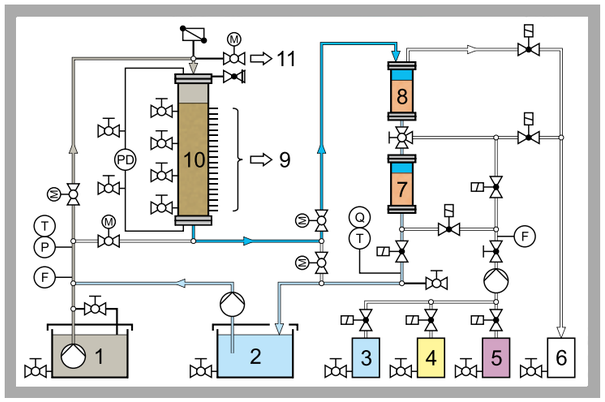

1 raw water, 2 treated water, 3 distilled water, 4 caustic soda, 5 hydrochloric acid, 6 collecting tank, 7 anion exchanger, 8 cation exchanger, 9 manometer panel, 10 sand filter, 11 water from backwashing; E conductivity, F flow rate, P system pressure, PD differential pressure, T temperature

Specification

[1] water treatment with depth filtration and ion exchange
[2] sand filter, cation and anion exchanger
[3] all processes usable separately or in combination
[4] backwash of sand filter
[5] regeneration of ion exchangers
[6] differential pressure measurement of sand filter
[7] 20 tube manometers to measure the pressures in the filter bed
[8] plotting of Micheau diagrams
[9] measurement of flow rate, temperature, conductivity, differential pressure and system pressure
[10] filter velocity adjustable
[11] GUNT software with control functions and data acquisition via USB under Windows Vista or Windows 7

Technical Data

Raw water pump
- max. flow rate: 25m³/h
- max. head: 20m

Backwash pump
- max. flow rate: 3m³/h
- max. head: 37m

Tanks for raw water and treated water
- capacity: each approx. 180L

Measuring ranges
- flow rate (raw water): 0...1300L/h
- flow rate (regeneration): 2...25L/h
- differential pressure: -1...1bar
- system pressure: 0...4bar
- tube manometers: 20x 0...1500mm
- conductivity: 0...600µS/cm
- temperature: 0...100°C
- filter velocity: approx. 0...70m/h

Dimensions and Weight

LxWxH: 1550x920x2200mm (trainer)
LxWxH: 1300x800x1150mm (supply unit)
LxWxH: 750x640x1840mm (manometer panel)
Total weight: approx. 320kg

Required for Operation

230V, 50Hz, 1 phase
Water connection, drainage, caustic soda, hydrochloric acid, distilled water

Scope of Delivery

1 trainer
1 supply unit
1 manometer panel
1 packing unit of gravel
1 packing unit of diatomite
1 packing unit of cation exchanger
1 packing unit of anion exchanger
1 set of hoses
1 GUNT software CD + USB cable
1 set of instructional material

Order Details

083.58200 CE 582 Water Treatment Plant 2

2E a division of G.U.N.T Gerätebau GmbH, P.O.Box 1125, D-22885 Barsbüttel, t +49 (40)67 08 54-0, f +49 (40)67 08 54-42, E-mail sales@gunt.de
We reserve the right to modify our products without any notifications. Visit our Websites: www.gunt.de | www.gunt2e.de

THE PRODUCT FILMS: THE OPTIMAL COMPLEMENT OF THE INSTRUCTIONAL MATERIAL

Films are available for selected units. The films clearly demonstrate and teach all relevant aspects necessary for the preparation and execution of the experiments. The films are part of the instructional material and facilitate a practice-oriented and easy introduction of the topic. The films are, of course, also available on our 2E website **www.gunt2E.de**.

CE 587 Dissolved Air Flotation

Production of small bubbles by sudden relief of the recycle water to atmospheric pressure

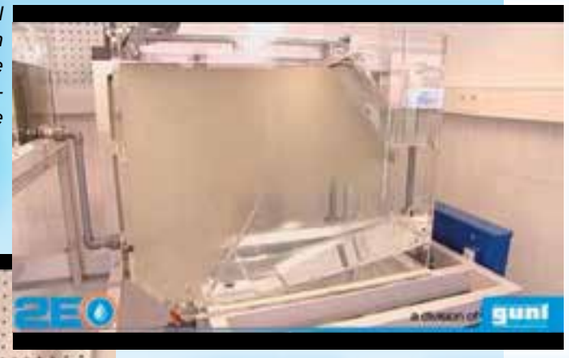

The electrically driven scraper removes the float from the water surface.

CE 705 Activated Sludge Process

Demonstration of all working steps necessary for the preparation of the experiments.

Activated sludge from a wastewater treatment plant is filled into the aeration tank of CE 705.

Adjustment of the desired oxygen concentration in the aeration tank.

CE 586 Precipitation and Flocculation

Introductory demonstration of the process

Emphasis on specific details such as the sedimentation of iron hydroxide flocs in the lamella separator.

The performace of the experiments is presented with many details and very clearly.

CE 640 Biotechnical Production of Ethanol

Explanation of the process

Distillation unit during operation

Adding the yeast into the fermentation tank

You can find these films on our 2E website **www.gunt2E.de**

INDEX

KEYWORD	CODE (PAGE)
A	
Absorption	CE 400 (304) CE 405 (306) HM 136 (78)
Activated carbon	CE 581 (446) CE 583 (312, 428)
Activated sludge process	CE 705 (360, 398)
Adsorption	CE 540 (308) CE 581 (446) CE 583 (312, 428)
Advanced oxidation	CE 584 (350, 442)
Aeration tank	CE 705 (360, 398)
Aerobic	CE 701 (358, 396) CE 705 (360, 398) CE 730 (362)
Agglomeration	CE 255 (274)
Air drying	CE 540 (308)
Airlift	CE 730 (362)
Aluminium oxide	CE 581 (446) CE 630 (324) WL 225 (52)
Anaerobic	CE 642 (374) CE 702 (366, 420)
Anaerobic degradation	CE 642 (374) CE 702 (366, 420)
Angle seat valve	HM 150.11 (68) HM 700.06 (159) MT 156 (162)
Anion exchanger	CE 300 (434) CE 581 (446) CE 582 (448)
Apex nozzle	CE 225 (252)
Arching	CE 200 (278) CE 210 (277)
Areometer	CE 640 (370) HM 115 (72) HM 135 (74)
Assembly	HL 960 (170) HL 962 (178 - 186) MT 180 - 186 (130 - 142)
Asynchronous motor	HM 365 (128)
B	
Backflow preventer	VS 106 (161)
Backwash	CE 579 (266, 392) CE 581 (446) CE 582 (448)
Ball mill	CE 245 (269)
Ball transport	CE 250 (284)
Ball valve	HM 700.13 (159) MT 158 (166) RT 396 (176)
Bernoulli	HM 150.07 (62) HM 500.06 (106) HM 500.07 (107) HM 500.08 (107) HM 500.09 (107)
Biochemical oxygen demand	CE 701 (358, 396) CE 702 (366, 420) CE 705 (360, 398)
Biofilm	CE 701 (358, 396)
Biogas	CE 642 (374) CE 702 (366, 420)
Biological degradation	CE 701 (358, 396) CE 702 (366, 420) CE 705 (360, 398)
BOD_5	CE 701 (358, 396) CE 702 (366, 420) CE 705 (360, 398)
Boiling	CE 600 (298) CE 602 (300) WL 204 (12) WL 210 (16) WL 220 (18)
Boolean algebra	IA 130 (96)
Bottom flow	CE 225 (252)
Bourdon tube pressure gauge	WL 203 (104)
Breakthrough curve	CE 540 (308) CE 581 (446) CE 583 (312, 428)
Bulk solids	CE 200 (278) CE 210 (277)
C	
Cake filtration	CE 116 (255) CE 117 (256) CE 283 (260) CE 284 (262) CE 286 (263) CE 287 (258)
Calibration	IA 110 (98) RT 310 (196)
Calorimeter	ET 805.50 (22)
Carbon dioxide	CE 400 (304) CE 642 (374) CE 702 (366, 420) WL 377 (36)
Carman	CE 117 (256) CE 220 (282)
Carrier material	CE 630 (324) CE 701 (358, 396)
Cascade motion	CE 245 (269)
Cataract motion	CE 245 (269)
Catalysis, chemical	CE 380 (346)
Catalysis, enzymatic	CE 380 (346)
Cation exchanger	CE 300 (434) CE 581 (446) CE 582 (448)
Caustic soda	CE 100 (342) CE 300 (434) CE 310 (332) CE 530 (318, 430) CE 582 (448) CE 586 (438) CE 587 (244, 386) CE 642 (374) CE 702 (366, 420) CE 705 (360, 398) RT 552 (210) RT 586 (214)
Centrifugal force	CE 225 (252) CE 235 (250) CE 245 (269) CE 282 (248)
Centrifugal pump	HL 962.01 - 04 (182 - 185) HM 365.11 (125) HM 365.14 (125) MT 180 (130) MT 181 (132) MT 185 (140)
Centrifuge	CE 282 (248)
Change-over valve	VS 104 (161)
Charge	CE 235 (250) CE 400 (304) CE 540 (308) CE 581 (446) CE 583 (312, 428)
Chemical oxygen demand	CE 701 (358, 396) CE 702 (366, 420) CE 705 (360, 398)
Classification	CE 264 (232) CE 275 (230)
CO_2	CE 400 (304) CE 642 (374) CE 702 (366, 420) WL 377 (36)
Coagulant	CE 115 (239) CE 586 (438) CE 587 (244, 386)
Coarse material	CE 225 (252) CE 235 (250) CE 275 (230)
Coarse material fraction	CE 275 (230)
COD	CE 701 (358, 396) CE 702 (366, 420) CE 705 (360, 398)
Coiled tube	CE 100 (342) CE 310.01 (334) CE 310.2 (336) CE 310.04 (340) ET 850 (24) WL 210 (16) WL 220 (18) WL 315C (188) CE 320 (272)
Column	CE 400 (304) CE 405 (306) CE 540 (308) CE 600 (298) CE 602 (300) CE 620 (322) HM 136 (78)
Comminution	CE 245 (269)
Communicating vessels	HM 115 (72)
Compaction	CE 200 (278)
Compressive strength	CE 200 (278) CE 255 (274)
Compressor	ET 500 (150) MT 140.01 (154) MT 140.02 (152)
Concentration profile	CE 583 (312, 428) CE 600 (298) CE 602 (300) CE 701 (358, 396)
Condensation	ET 350 (26) WL 220 (18) WL 230 (20)
Condenser	CE 600 (298) CE 602 (300) CE 640 (370) CE 715 (294) ET 850 (24) WL 210 (16) WL 220 (18) WL 230 (20)
Conductivity	CE 100 (342) CE 110 (28) CE 300 (434) CE 320 (272) CE 530 (318, 430) CE 581 (446) CE 582 (448) CE 620 (322) CE 630 (324) RT 586 (214)
Control (flow rate)	RT 020 (84) RT 522 (204) RT 580 (216)
Control (level)	RT 010 (82) RT 512 (202) RT 580 (216) RT 681 (218) RT 682 (220)
Control (pH value)	CE 586 (438) CE 587 (244, 386) CE 640 (370) CE 642 (374) CE 702 (366, 420) CE 705 (360, 398) RT 552 (210) RT 586 (214)
Control (pressure)	RT 030 (86) RT 532 (206) RT 681 (218)
Control (speed)	CE 282 (248) CE 320 (272) RT 050 (90)
Control (temperature)	CE 100 (342) CE 310 (332) CE 640 (370) CE 642 (374) CE 702 (366, 420) CE 705 (360, 398) RT 040 (88) RT 542 (208) RT 580 (216) RT 682 (220)
Convection	CE 130 (292) CE 701 (358, 396) WL 220 (18) WL 320 (56) WL 352 (30) WL 373 (34) WL 377 (36)
Convection drying	CE 130 (292)
Cooling crystallisation	CE 520 (316)
Cooling tower	WL 320 (56)
Corner valve	HM 700.05 (159)
Corrosion	CE 105 (120)
Counterflow	CE 400 (304) CE 405 (306) CE 600 (298) CE 602 (300) CE 620 (322) CE 630 (324) CE 715 (294) HM 136 (78) WL 110 (40) WL 315C (188) WL 320 (56)
Crystal growth	CE 520 (316)
Crystallisation, cooling	CE 520 (316)
Cutaway models	HM 700.01 - 15 (158) VS 102 - 109 (161)
Cyclone	CE 225 (252) CE 235 (250) CE 275 (230) CE 715 (294) ET 805.50 (22)
Cylinder (thick-walled)	FL 140 (116)
Cylinder (thin-walled)	FL 130 (114)
D	
Darcy	CE 116 (255) CE 117 (256) CE 283 (260) CE 284 (262) CE 286 (263) CE 287 (258)
Degradation curve	CE 584 (350, 442)
Degree of separation	CE 235 (250)
Demister unit	WL 230 (20) WL 320 (56)
Denitrification	CE 705 (360, 398)
Depth filtration	CE 116 (255) CE 117 (256) CE 579 (266, 392) CE 581 (446) CE 582 (448)
Desalination	CE 300 (434) CE 530 (318, 430) CE 581 (446) CE 582 (448)
Desorption	CE 400 (304) CE 405 (306) CE 540 (308)
Diaphragm pump	CE 271 (146) MT 183 (136)
Differential pressure	CE 116 (255) CE 117 (256) CE 220 (282) CE 225 (252) CE 235 (250) CE 250 (284) CE 275 (230) CE 579 (266, 392) CE 581 (446) CE 582 (448) HM 115 (72) HM 150.01 (64)
Diffusion	CE 110 (28) CE 530 (318, 430)
Diffusion coefficient	CE 110 (28) CE 530 (318, 430)
Dilute phase transport	CE 250 (284)
Disc centrifuge	CE 282 (248)
Dissolved air flotation	CE 587 (244, 386)
Distillation	CE 600 (298) CE 602 (300) CE 620 (322) CE 640 (370)
Distillation, counterflow	CE 600 (298) CE 602 (300)
Drum	CE 245 (269) CE 280 (234) CE 283 (260)
Drum cell filter	CE 283 (260)
Drum-type magnetic separator	CE 280 (234)
Drying	CE 130 (292) CE 540 (308)
Drying curve	CE 130 (292)
Drying rate	CE 130 (292)
E	
Emulsion	CE 282 (248) CE 320 (272)
Energy balance	CE 715 (294) WL 320 (56)
Ergun	CE 220 (282)
Evaporation	CE 130 (292) CE 620 (322) CE 715 (294) ET 805.50 (22) WL 210 (16) WL 220 (18)
Evaporation, rising film	CE 715 (294)
Evaporation, vacuum	CE 715 (294)
Exchanging capacity	CE 300 (434)
Extraction, counterflow	CE 620 (322) CE 630 (324)
Extraction, liquid-liquid	CE 620 (322)
Extraction, solid-liquid	CE 630 (324)
F	
Falling film	CE 405 (306) CE 584 (350, 442)
Feed material	CE 235 (250) CE 250 (284) CE 275 (230) CE 280 (234)
Fick's law	CE 110 (28)
Film boiling	WL 210 (16) WL 220 (18)
Film evaporator	CE 715 (294)
Filter	CE 116 (255) CE 117 (256) CE 283 (260) CE 284 (262) CE 285 (264) CE 286 (263) CE 287 (258) CE 579 (266, 392) CE 581 (446) CE 582 (448)
Filter cake	CE 116 (255) CE 283 (260) CE 284 (262) CE 286 (263) CE 287 (258)
Filter cloth	CE 283 (260) CE 284 (262) CE 286 (263) CE 287 (258)
Filtrate	CE 116 (255) CE 117 (256) CE 283 (260) CE 284 (262) CE 285 (264) CE 286 (263) CE 287 (258) CE 579 (266, 392) CE 581 (446) CE 582 (448)
Filtration	CE 116 (255) CE 117 (256) CE 283 (260) CE 284 (262) CE 285 (264) CE 286 (263) CE 287 (258) CE 579 (266, 392) CE 581 (446) CE 582 (448)
Fine material	CE 225 (252) CE 235 (250) CE 255 (274) CE 275 (230)
Fixed bed	CE 116 (255) CE 117 (256) CE 220 (282) CE 540 (308) CE 579 (266, 392) CE 581 (446) CE 582 (448) CE 583 (312, 428) CE 701 (358, 396)
Fixed bed catalysis	CE 380 (346)
Fixed biofilm process	CE 701 (358, 396)
Flocculant	CE 586 (438) CE 587 (244, 386)
Flocs	CE 586 (438) CE 587 (244, 386)
Flooding point	HM 136 (78)
Flotation	CE 587 (244, 386)
Flow coefficient	HM 150.07 (62)
Flow conditions	CE 235 (250) CE 275 (230) CE 520 (316) HM 142 (240, 388) HM 150.01 (64) HM 150.18 (60)
Flow field	CE 320 (272)
Flow impeder	CE 320 (272)
Flow injection analysis	CE 380.01 (348)
Flow nozzle	HM 700.02 (159)
Flow profile	CE 210 (277)
Flow rate measurement	HM 500. 01 - 16 (106 - 108)
Flow rate measurement, electromagnetic	HM 500.04 (107)
Flow through	CE 117 (256) CE 540 (308) HM 136 (78)
Flow, laminar	HM 150.01 (64) HM 150.18 (60)
Flow, turbulent	HM 150.01 (64) HM 150.11 (68) HM 150.18 (60)
Fluidisation	CE 117 (256) CE 220 (282) WL 225 (52)
Fluidisation velocity	CE 117 (256) CE 220 (282)
Fluidised bed	CE 117 (256) CE 220 (282) CE 520 (316) WL 225 (52)
Free convection boiling	WL 220 (18)
Friction losses	HM 150.01 (64) HM 150.11 (68)
Friction, internal	CE 200 (278)
Funnel flow	CE 200 (278) CE 210 (277)

INDEX

KEYWORD	CODE (PAGE)
G	
Gas absorption	CE 400 (304)
Gas analysis	CE 400 (304) CE 642 (374) ET 850 (24)
Gas cyclone	CE 235 (250) CE 275 (230)
Gas flow classification	CE 275 (230)
Gas mixture	CE 400 (304) CE 405 (306)
Gate valve	HM 700.10 (159)
Gear type oil pump	MT 186 (142)
Gibbs triangle	CE 620 (322)
Granulating liquid	CE 255 (274)
Granulation	CE 255 (274)
Gravity	HM 142 (240, 388)
H	
H_2O_2	CE 584 (350, 442)
Heat conduction	WL 225 (52) WL 315C (188) WL 372 (32) WL 373 (34) WL 377 (36)
Heat exchanger, finned cross-flow	WL 315C (188)
Heat exchanger, jacketed vessel with stirrer and coil	WL 110.04 (48)
Heat exchanger, plate	WL 110.02 (44) WL 315C (188)
Heat exchanger, shell & tube	WL 110.03 (46) WL 315C (188)
Heat exchanger, tubular	WL 110.01 (42) WL 315C (188)
Heat transfer	CE 320 (272) CE 600 (298) CE 602 (300) WL 110 (40) WL 210 (16) WL 225 (52) WL 315C (188) WL 320 (56) WL 352 (30) WL 372 (32) WL 373 (34) WL 377 (36)
Heat transfer coefficient	WL 225 (52) WL 230 (20) WL 352 (30)
Heating steam	CE 640 (370) CE 715 (294)
Heating water	CE 310 (332) CE 380 (346) CE 520 (316) CE 640 (370) CE 642 (374) CE 702 (366, 420) CE 705 (360, 398)
HTU	CE 400 (304)
Humidity	CE 130 (292) CE 540 (308) CE 642 (374) ET 805.50 (22) WL 201 (100) WL 202 (102) WL 320 (56)
Humidity (capacitive measurement)	WL 201 (100)
Humidity (hygrometric measurement)	WL 201 (100)
Humidity (psychrometric measurement)	WL 201 (100)
h-x diagram	WL 320 (56)
Hydrocyclone	CE 225 (252)
Hydrogen peroxide	CE 584 (350, 442)
Hydroxide ions	CE 300 (434) CE 582 (448)
Hydroxyl radicals	CE 584 (350, 442)

KEYWORD	CODE (PAGE)
I	
Imhoff	HM 142 (240, 388)
Immersion tube	CE 225 (252) CE 235 (250)
Inclined tube manometer	WL 203 (104)
Indicator	CE 540 (308)
Ion exchanger	CE 300 (434) CE 581 (446) CE 582 (448)
Irradiation	CE 584 (350, 442)
K	
Kozeny	CE 117 (256) CE 220 (282)
L	
Lamella separator	CE 586 (438)
Laminar flow	HM 150.01 (64) HM 150.18 (60)
Liquid mixture	CE 600 (298) CE 602 (300) CE 620 (322)
Log p-h diagram	ET 350 (26)
Loop-type bubble column	CE 730 (362)
M	
Magnetic separator	CE 280 (234)
Maintenance	HL 962 (178-186) MT 180-186 (130-142)
Mass balance	CE 130 (292) CE 400 (304) CE 583 (312, 428) CE 620 (322)
Mass flow	CE 200 (278) CE 210 (277)
Mass transfer zone	CE 540 (308) CE 583 (312, 428)
McCabe-Thiele	CE 600 (298) CE 602 (300)
Membrane	CE 530 (318, 430)
Membrane separation process	CE 530 (318, 430)
Methane	CE 642 (374) CE 702 (366, 420)
Micheau diagram	CE 579 (266, 392) CE 582 (448)
Microorganisms	CE 642 (374) CE 701 (358, 396) CE 702 (366, 420) CE 705 (360, 398)
Milling	CE 245 (269)
Mixed bed ion exchanger	CE 581 (446)
Mixing	CE 320 (272)
Mixture of solids	CE 264 (232) CE 275 (230) CE 280 (234) CE 630 (324)
Mohr's circle	CE 200 (278) FL 130 (114) FL 140 (116)
Mollier diagram	CE 130 (292) CE 540 (308)
Multivariable control	RT 681 (218) RT 682 (220)

KEYWORD	CODE (PAGE)
N	
Neutralization	CE 586 (438) RT 586 (214)
Nitrification	CE 701 (358, 396) CE 705 (360, 398)
Non-return butterfly valve	VS 107 (161)
Non-return valve	HM 700.07 (159) MT 157 (164)
Nucleate boiling	WL 220 (18)
Nusselt number	WL 352 (30)
Nutsche	CE 284 (262) CE 286 (263)
Nutsche pressure filter	CE 286 (263)
Nutsche vacuum filter	CE 284 (262)
O	
OH radical	CE 584 (350, 442)
Organic matter	CE 642 (374) CE 701 (358, 396) CE 702 (366, 420) CE 705 (360, 398)
Orifice plate flow meter	HM 150.11 (68)
Osmosis	CE 530 (318, 430)
Outflow time	CE 210 (277)
Overall heat transfer coefficient	WL 110 (40) WL 110.01 (42) WL 110.02 (44) WL 110.03 (46) WL 315C (188)
Oxidation, advanced	CE 584 (350, 442)
Oxygen concentration	CE 405 (306) CE 705 (360, 398) CE 702 (366, 420) CE 730 (362) RT 586 (214)
P	
Packed column	CE 400 (304) CE 600 (298) CE 602 (300) CE 620 (322) HM 136 (78)
Paddle stirrer	CE 320 (272)
Particle layer	CE 116 (255) CE 117 (256) CE 220 (282)
Particle size	CE 117 (256) CE 220 (282) CE 225 (252) CE 264 (232) CE 275 (230)
Particle size analysis	CE 235 (250) CE 264 (232) CE 275 (230)
Particle size enlargement	CE 255 (274)
Particle-size analysis	CE 235 (250) CE 264 (232) CE 275 (230)
Pelletisation	CE 255 (274)
Permeate	CE 530 (318, 430)
pH value	CE 105 (120) CE 586 (438) CE 587 (244, 386) CE 640 (370) CE 642 (374) CE 702 (366, 420) CE 705 (360, 398) RT 552 (210) RT 586 (214)

KEYWORD	CODE (PAGE)
Phase boundary	CE 620 (322)
Pipe friction factor	HM 150.01 (64)
Piston compressor	ET 500 (150) MT 140.01 (154) MT 140.02 (152)
Piston pump	HM 365.17 (125) MT 184 (138)
Pitot tube	HM 115 (72) HM 150.07 (62) HM 150.12 (66) HM 500.07 (107)
Plate and frame filter press	CE 287 (258)
PLC	CE 640 (370) CE 642 (374) IA 130 (96) RT 580 (216) RT 800 (94)
Plug transport	CE 250 (284)
Pneumatic transport	CE 250 (284)
Polymer	CE 587 (244, 386) CE 586 (438)
Precipitation	CE 586 (438)
Pre-shearing	CE 200 (278)
Pressure loss	CE 116 (255) CE 117 (256) CE 220 (282) CE 225 (252) CE 235 (250) CE 250 (284) CE 275 (230) CE 400 (304) CE 579 (266, 392) CE 581 (446) CE 582 (448) CE 600 (298) CE 602 (300) HM 150.01 (64) HM 150.07 (62) HM 150.11 (68)
Pressure reducing valve	HM 700.08 (159) RT 395 (174)
Pressure sensor	IA 110 (98) RT 030 (86)
Pressure testing	IA 110 (98) MT 162 (168)
Pressure-lifting	CE 250 (284)
Primary vortex	CE 225 (252) CE 235 (250)
Pump	CE 271 (146) HL 962.01-04 (182-185) HM 365.11 (125) HM 365.14 (125) HM 365.15 (125) HM 365.17 (125) MT 180-186 (130-142)
Pump characteristic	HL 962.01-04 (182-185) HM 365.10 (126) HM 365.11 (125) HM 365.14 (125) HM 365.15 (125)
Pumps, parallel connection	HM 365.14 (125)
Pumps, series connection	HM 365.14 (125)
p-V diagram	ET 500 (150)
Pyknometer	CE 115 (239)
R	
Radical, OH-	CE 584 (350, 442)
Reaction kinetics	CE 584 (350, 442)

KEYWORD	CODE (PAGE)
Reactor, falling film	CE 405 (306) CE 584 (350, 442)
Reactor, stirred	CE 285 (264) CE 310.01 (334) CE 310.03 (338) CE 310.04 (340) CE 320 (272) CE 640 (370) CE 642 (374) CE 702 (366, 420) RT 586 (214)
Reactor, tubular	CE 100 (342) CE 310.02 (336)
Reactor, UASB	CE 702 (366, 420)
Rectification, continuous	CE 600 (298)
Rectification, discontinuous	CE 600 (298) CE 602 (300)
Redox potential	RT 586 (214)
Reflection time	HM 155 (76)
Refrigeration circuit	ET 350 (26)
Regeneration	CE 300 (434) CE 400 (304) CE 405 (306) CE 540 (308) CE 582 (448) CE 620 (322) CE 630 (324)
Repulsive forces	CE 586 (438) CE 587 (244, 386)
Resilient seated gate valve	VS 102 (161)
Retentate	CE 530 (318, 430)
Retention	CE 530 (318, 430)
Return sludge	CE 701 (358, 396) CE 702 (366, 420) CE 705 (360, 398)
Return sludge ratio	CE 600 (298) CE 602 (300) CE 702 (366, 420) CE 705 (360, 398)
Reverse osmosis	CE 530 (318, 430)
Reynolds	HM 150.01 (64) HM 150.18 (60) WL 352 (30)
Ring shear tester	CE 200 (278)
Rising film evaporation	CE 715 (294)
Rolling agglomeration	CE 255 (274)
Rotary vane pump	CE 272 (148) WL 377 (36)
S	
Safety valve	HM 700.14 (159)
Salt solution	CE 110 (28) CE 300 (434) CE 530 (318, 430) CE 630 (324)
Sand filter	CE 579 (266, 392) CE 581 (446) CE 582 (448)
Saponification reaction	CE 310.01-04 (334-340)
Saturated vapour	ET 805.50 (22) WL 204 (12)
Saturation pressure	WL 204 (12)
Saturation temperature	CE 520 (316) ET 850 (24) WL 230 (20)
Schulze	CE 200 (278)
Scraper	CE 587 (244, 386)

KEYWORD	CODE (PAGE)
Screening machine	CE 264 (232)
Screw down valve	VS 103 (161)
Screw oil pump	MT 182 (134)
Screwed pipe connection	HM 700.15 (159)
Sea water desalination	CE 530 (318, 430)
Secondary clarifier	CE 701 (358, 396) CE 702 (366, 420) CE 705 (360, 398)
Secondary vortex	CE 225 (252) CE 235 (250)
Sedimentation	CE 115 (239) CE 586 (438) CE 705 (360, 398) HM 142 (240, 388)
Sedimentation tank	CE 701 (358, 396) CE 702 (366, 420) CE 705 (360, 398) HM 142 (240, 388)
Segregation	CE 210 (277)
Separation	CE 115 (239) CE 116 (255) CE 117 (256) CE 225 (252) CE 235 (250) CE 275 (230) CE 280 (234) CE 282 (248) CE 283 (260) CE 284 (262) CE 286 (263) CE 287 (258) CE 587 (244, 386) HM 142 (240, 388)
Separation function	CE 225 (252) CE 235 (250) CE 275 (230)
Separation size	CE 225 (252) CE 235 (250) CE 275 (230)
Settling velocity	CE 115 (239) CE 250 (284) HM 135 (74) HM 142 (240, 388)
Sharpness of separation	CE 275 (230)
Shear cell	CE 200 (278)
Shear force	CE 200 (278)
Shearing to failure	CE 200 (278)
Side channel pump	HM 365.15 (125)
Sieve plate column	CE 600 (298) CE 602 (300)
Silica gel	CE 540 (308) CE 642 (374)
Silo	CE 200 (278) CE 210 (277)
Sludge age	CE 702 (366, 420) CE 705 (360, 398)
Softening	CE 300 (434) CE 581 (446) CE 582 (448)
Solid	CE 130 (292) CE 250 (284) CE 255 (274) CE 275 (230) CE 520 (316) CE 579 (266, 392) CE 581 (446) CE 582 (448) CE 586 (438) CE 587 (244, 386) CE 630 (324) HM 142 (240, 388)
Solid concentration	CE 115 (239) CE 225 (252) CE 284 (262) CE 286 (263) CE 287 (258) CE 579 (266, 392) CE 587 (244, 386) HM 142 (240, 388)

INDEX

KEYWORD	CODE (PAGE)
Solid, liquid separation	CE 115 (239) CE 116 (255) CE 117 (256) CE 225 (252) CE 283 (260) CE 284 (262) CE 286 (263) CE 287 (258) CE 579 (266, 392) CE 587 (244, 386) HM 142 (240, 388)
Solvent	CE 110 (28) CE 300 (434) CE 400 (304) CE 405 (304) CE 520 (316) CE 530 (318, 430) CE 620 (322) CE 630 (324) CE 715 (294)
Sorting	CE 280 (234)
Spiral wound membrane module	CE 530 (318, 430)
Standard orifice plate	HM 700.01 (159)
Standard Venturi meter	HM 700.03 (158)
Steam boiler	ET 860 (190)
Steam generator	ET 850 (24)
Stirred tank	CE 285 (264) CE 310.01 (334) CE 310.03 (338) CE 310.04 (340) CE 320 (272) CE 640 (370) CE 642 (374) CE 702 (366, 420) RT 580 (216) RT 586 (214)
Stirred tanks in series	CE 310.04 (340)
Stirring	CE 285 (264) CE 320 (272)
Storage	CE 200 (278) CE 210 (277)
Straight-way plug valve	HM 700.11 (159)
Straight-way valve	HM 700.04 (158)
Strainer	HL 960 (170) HM 700.09 (159) RT 396 (176) VS 109 (161)
Strand transport	CE 250 (284)
Strength	CE 200 (278) CE 255 (274)
Stress state	FL 130 (114) FL 140 (116)
Stress, axial	FL 130 (114) FL 140 (116)
Stress, circumferential	FL 130 (114) FL 140 (116)
Stress, principal	FL 130 (114) FL 140 (116)
Stroke rate	CE 271 (146) MT 183 (136)
Submerged reactor	CE 702 (366, 420) CE 705 (360, 398) CE 730 (362)
Surface moisture	CE 130 (292)
Surplus sludge	CE 705 (360, 398)
Suspension	CE 115 (239) CE 116 (255) CE 283 (260) CE 284 (262) CE 285 (264) CE 286 (263) CE 287 (258) CE 587 (244, 386) HM 142 (240, 388)
Suspension production unit	CE 285 (264)
Suspension velocity	CE 250 (284)
System characteristics	HM 365.10 (126) HM 365.11 (125) HM 365.14 (125)

T

KEYWORD	CODE (PAGE)
Temperature measurement	WL 202 (102)
Thermodynamics	ET 350 (26) ET 850 (24) ET 805.50 (22) WL 102 (14) WL 204 (12) WL 210 (16) WL 220 (18) WL 230 (20)
Top flow	CE 225 (252)
Top product	CE 600 (298) CE 602 (300) CE 620 (322)
Tracer	HM 142 (240, 388)
Transport state	CE 250 (284)
Transport, pneumatic	CE 250 (284)
Tray dryer	CE 130 (292)
Trickling filter	CE 701 (358, 396)
Trigger signal	HM 155 (76)
Tube manometers	CE 116 (255) CE 117 (256) CE 579 (266, 392) CE 582 (448) HM 115 (72) HM 150.01 (64) HM 150.07 (62) HM 150.11 (68) HM 150.12 (66)
Tubular reactor	CE 100 (342) CE 310.02 (336)
Turbulent flow	HM 150.01 (64) HM 150.11 (68) HM 150.18 (60)

U

KEYWORD	CODE (PAGE)
UASB	CE 702 (366, 420)
U-tube manometer	WL 203 (104)
UV light	CE 584 (350, 442)

V

KEYWORD	CODE (PAGE)
Vacuum	CE 272 (148) CE 283 (260) CE 284 (262) CE 600 (298) CE 602 (300) CE 715 (294) RT 681 (218) WL 377 (36)
Vacuum distillation	CE 600 (298) CE 602 (300)
Vacuum evaporation	CE 715 (294)
Vacuum pump	CE 272 (148) CE 715 (294) WL 377 (36)
Valves and fittings	HM 700.01 -15 (158) VS 102 -109 (161) MT 156 (162) MT 157 (164) MT 158 (166) RT 395 (174) RT 396 (176)
Van't-Hoff	CE 530 (318, 430)
Vapour pressure	CE 715 (294) ET 850 (24) ET 860 (190) RT 681 (218) WL 204 (12) WL 220 (18) WL 230 (20)
Vapour pressure curve	WL 204 (12) WL 220 (18) WL 230 (20)
Venturi	HM 500.06 (106) HM 500.07 (107) HM 500.11 (107) HM 700.03 (158)
Venturi nozzle	HM 150.07 (62) HM 150.11 (68)
Viscosity	CE 115 (239) CE 320 (272)
Vortex wake	CE 275 (230)

W

KEYWORD	CODE (PAGE)
Wall friction angle	CE 200 (278)
Wall yield loci	CE 200 (278)
Wastewater treatment plant	CE 701 (358, 396) CE 702 (366, 420) CE 705 (360, 398)
Water hammer	HM 155 (76)
Water treatment (mechanical processes)	CE 579 (266, 392) CE 587 (244, 386) HM 142 (240, 388)
Water treatment (biological processes)	CE 701 (358, 396) CE 702 (366, 420) CE 705 (360, 398)
Water treatment (physical/ chemical processes)	CE 300 (434) CE 530 (318, 430) CE 583 (312, 428) CE 584 (350, 442) CE 586 (438)
Water vapour	ET 805.50 (22) WL 204 (12) WL 210 (16)
Wavelength	CE 584 (350, 442)
Wedge gate valve	MT 156 (162)

Z

KEYWORD	CODE (PAGE)
Zigzag sifter	CE 275 (230)

PRODUCT OVERVIEW

CODE	PRODUCT	PAGE
CE 100	Tubular Reactor	342
CE 105	Corrosion Experimental Unit	120
CE 110	Diffusion in Liquids and Gases	28
CE 115	Fundamentals of Sedimentation	239
CE 116	Cake and Depth Filtration	255
CE 117	Flow through Particle Layers	256
CE 130	Convection Drying	292
CE 200	Flow Properties of Bulk Solids	278
CE 210	Flow of Bulk Solids from Silos	277
CE 220	Fluidised Bed Formation	282
CE 225	Hydrocyclone	252
CE 235	Gas Cyclone	250
CE 245	Ball Mill	269
CE 250	Pneumatic Transport	284
CE 255	Rolling Agglomeration	274
CE 264	Screening Machine	232
CE 271	Multi-Head Diaphragm Pump	146
CE 272	Rotary Vane Vacuum Pump	148
CE 275	Gas Flow Classification	230
CE 280	Magnetic Separation	234
CE 282	Disc Centrifuge	248
CE 283	Drum Cell Filter	260
CE 284	Nutsche Vacuum Filter	262
CE 285	Suspension Production Unit	264
CE 286	Nutsche Pressure Filter	263
CE 287	Plate and Frame Filter Press	258
CE 300	Ion Exchange	434
CE 310	Supply Unit for Chemical Reactors	332
CE 310.01	Continuous Stirred Tank Reactor	334
CE 310.02	Tubular Reactor	336
CE 310.03	Stirred Tanks in Series	338
CE 310.04	Discontinuous Stirred Tank Reactor	340

CODE	PRODUCT	PAGE
CE 320	Stirring	272
CE 380	Fixed Bed Catalysis	346
CE 380.01	Flow Injection Analysis	348
CE 400	Gas Absorption	304
CE 405	Falling Film Absorption	306
CE 520	Cooling Crystallisation	316
CE 530	Reverse Osmosis	318/430
CE 540	Adsorptive Air Drying	308
CE 579	Depth Filtration	266/392
CE 581	Water Treatment Plant 1	446
CE 582	Water Treatment Plant 2	448
CE 583	Adsorption	312/428
CE 584	Advanced Oxidation	350/442
CE 586	Precipitation and Flocculation	438
CE 587	Dissolved Air Flotation	244/386
CE 600	Continuous Rectification	298
CE 602	Discontinuous Rectification	300
CE 620	Liquid-Liquid Extraction	322
CE 630	Solid-Liquid Extraction	324
CE 640	Biotechnical Production of Ethanol	370
CE 642	Biogas Plant	374
CE 701	Biofilm Process	358/396
CE 702	Anaerobic Water Treatment	366/420
CE 705	Activated Sludge Process	360/398
CE 715	Rising Film Evaporation	294
CE 730	Airlift Reactor	362
ET 350	Changes of State in the Refrigeration Circuit	26
ET 500	Two-Stage Piston Compressor	150
ET 805.50	Determination of the Vapour Content	22
ET 850	Steam Generator	24
ET 860	Safety Devices on Steam Boilers	190

PRODUCT OVERVIEW

CODE	PRODUCT	PAGE
FL 130	Stress and Strain Analysis on a Thin-Walled Cylinder	114
FL 140	Stress and Strain Analysis on a Thick-Walled Cylinder	116
FL 151	Multi-Channel Measurement Amplifier	118
HL 960	Assembly Station: Pipes and Valves and Fittings	170
HL 960.01	Assembly and Alignment of Pumps and Drives	144/172
HL 962	Assembly Stand for Pumps	180
HL 962.01	Standard Chemicals Pump	182
HL 962.02	Canned Motor Pump	183
HL 962.03	Side Channel Pump	184
HL 962.04	Standard Chemicals Pump with Magnetic Clutch	185
HL 962.30	Tank System	186
HM 115	Hydrostatics Trainer	72
HM 135	Determination of the Settling Velocity	74
HM 136	Flow through Packed Columns	78
HM 142	Separation in Sedimentation Tanks	240/388
HM 150	Base Module for Experiments in Fluid Mechanics	70
HM 150.01	Pipe Friction for Laminar/Turbulent Flow	64
HM 150.07	Bernoulli's Principle	62
HM 150.11	Losses in a Pipe System	68
HM 150.12	Vertical Flow from a Tank	66
HM 150.18	Osborne Reynolds Experiment	60
HM 155	Water Hammer in Pipes	76
HM 365	Universal Drive and Brake Unit	128
HM 365.10	Supply Unit for Water Pumps	126
HM 365.11	Standard Centrifugal Pump	125
HM 365.14	Centrifugal Pumps: Series and Parallel Connected	125
HM 365.15	Side Channel Pump	125
HM 365.17	Reciprocating Piston Pump	125
HM 500	Flow Meter Trainer	108
HM 500.01	Rotameter	106

CODE	PRODUCT	PAGE
HM 500.03	Rotameter with Transducer	107
HM 500.04	Electromagnetic Flow Meter	107
HM 500.05	Ultrasonic Flow Meter	107
HM 500.06	Venturi Nozzle	106
HM 500.07	Pitot Tube	107
HM 500.08	Orifice Plate Flow Meter	107
HM 500.09	Measuring Nozzle	107
HM 500.10	Paddle Wheel Flow Meter	107
HM 500.11	Vortex Flow Meter	107
HM 500.13	Orifice Plate Flow Meter with Transducer	107
HM 500.14	Turbine Wheel Flow Meter	107
HM 500.15	Bypass Flow Meter	107
HM 500.16	Baffle Plate Flow Meter	107
HM 700.01	Cutaway Model: Standard Orifice Plate	159
HM 700.02	Cutaway Model: Flow Nozzle	159
HM 700.03	Cutaway Model: Standard Venturi Meter	158
HM 700.04	Cutaway Model: Straight-Way Valve	158
HM 700.05	Cutaway Model: Corner Valve	159
HM 700.06	Cutaway Model: Angle Seat Valve	159
HM 700.07	Cutaway Model: Non-Return Valve	159
HM 700.08	Cutaway Model: Pressure Reducing Valve	159
HM 700.09	Cutaway Model: Strainer	159
HM 700.10	Cutaway Model: Gate Valve	159
HM 700.11	Cutaway Model: Straight-Way Plug Valve	159
HM 700.12	Cutaway Model: 3-Way Plug Valve	159
HM 700.13	Cutaway Model: Ball Valve	159
HM 700.14	Cutaway Model: Safety Valve	159
HM 700.15	Cutaway Models: Various Screwed Pipe Connections	159
IA 110	Calibrating a Pressure Sensor	98
IA 130	PLC Module	96

CODE	PRODUCT	PAGE
MT 140.01	Assembly Exercise Piston Compressor: Functional Test	154
MT 140.02	Assembly Exercise: Piston Compressor	152
MT 156	Assembly Exercise: Wedge Gate Valve and Angle Seat Valve	162
MT 157	Assembly Exercise: Butterfly Valve and Non-Return Valve	164
MT 158	Assembly Exercise: Ball Valve and Shut-off Valve	166
MT 162	Hydraulic Valves and Fittings Test Stand	168
MT 180	Assembly & Maintenance Exercise: Centrifugal Pump	130
MT 181	Assembly & Maintenance Exercise: Multi-Stage Centrifugal Pump	132
MT 182	Assembly & Maintenance Exercise: Screw Pump	134
MT 183	Assembly & Maintenance Exercise: Diaphragm Pump	136
MT 184	Assembly & Maintenance Exercise: Piston Pump	138
MT 185	Assembly & Maintenance Exercise: In-Line Centrifugal Pump	140
MT 186	Assembly & Maintenance Exercise: Gear Pump	142
RT 010	Training System: Level Control, HSI	82
RT 020	Training System: Flow Control, HSI	84
RT 030	Training System: Pressure Control, HSI	86
RT 040	Training System: Temperature Control, HSI	88
RT 050	Training System: Speed Control, HSI	90
RT 060	Training System: Position Control, HSI	92
RT 310	Calibration Station	196
RT 395	Maintenance of Valves and Fittings and Actuators	174
RT 396	Pump and Valves and Fittings Test Stand	176
RT 512	Level Control Trainer	202
RT 522	Flow Control Trainer	204
RT 532	Pressure Control Trainer	206
RT 542	Temperature Control Trainer	208
RT 552	pH Value Control Trainer	210
RT 580	Fault Finding in Control Systems	216
RT 586	Control of Water Quality	214
RT 650.50	Process Control Software for RT 512 – RT 552 Series	212
RT 650.60	Process Control Software for RT 681 and RT 682	222

CODE	PRODUCT	PAGE
RT 681	Multivariable Control: Vacuum Degassing	218
RT 682	Multivariable Control: Stirred Tank	220
RT 800	PLC Application: Mixing Process	94
VS 102	Cutaway Model: Resilient Seated Gate Valve	161
VS 103	Cutaway Model: Screw Down Valve	161
VS 104	Cutaway Model: Changeover Valve	161
VS 106	Cutaway Model: Backflow Preventer	161
VS 107	Cutaway Model: Non-Return Butterfly Valve	161
VS 109	Cutaway Model: Strainer	161
WL 102	Change of State of Gases	14
WL 110	Heat Exchanger Supply Unit	40
WL 110.01	Tubular Heat Exchanger	42
WL 110.02	Plate Heat Exchanger	44
WL 110.03	Shell & Tube Heat Exchanger	46
WL 110.04	Jacketed Vessel with Stirrer & Coil	48
WL 110.20	Water Chiller for WL 110	50
WL 201	Fundamentals of Humidity Measurement	100
WL 202	Fundamentals of Temperature Measurement	102
WL 203	Fundamentals of Pressure Measurement	104
WL 204	Vapour Pressure of Water – Marcet Boiler	12
WL 210	Evaporation Process	16
WL 220	Boiling Process	18
WL 225	Heat Transfer in the Fluidised Bed	52
WL 230	Condensation Process	20
WL 315C	Trainer for Various Heat Exchangers	188
WL 320	Wet Cooling Tower	56
WL 352	Heat Transfer by Convection	30
WL 372	Heat Transfer by Conduction	32
WL 373	Heat Conduction in Gases and Liquids	34
WL 377	Convection and Radiation	36

CONTACT

G.U.N.T.
Gerätebau GmbH

Hanskampring 15 - 17
D-22885 Barsbüttel
GERMANY

phone: +49 40 67 08 54 - 0
Fax: +49 40 67 08 54 - 42

web: www.gunt.de
e-mail: sales@gunt.de

YOUR LOCAL SERVICE

Visit our website
www.gunt.de